Volume I

TRANSCRIPT OF RECORD

SUPREME COURT OF THE UNITED STATES

OCTOBER TERM, 1962

No. 438

UNITED STATES, APPELLANT,

vs.

THE SINGER MANUFACTURING COMPANY

APPEAL FROM THE UNITED STATES DISTRICT COURT FOR THE SOUTHERN DISTRICT OF NEW YORK

FILED SEPTEMBER 18, 1962

PROBABLE JURISDICTION NOTED DECEMBER 3, 1962

SUPREME COURT OF THE UNITED STATES

OCTOBER TERM, 1962

No. 438

UNITED STATES, APPELLANT,

vs.

THE SINGER MANUFACTURING COMPANY

APPEAL FROM THE UNITED STATES DISTRICT COURT FOR THE SOUTHERN DISTRICT OF NEW YORK

Volume I

INDEX*

	Original	Print
Record from the United States District Court for the Southern District of New York	2350	1
Complaint	2350	1
Answer	2357	7
Order amending complaint	2362	10
Order amending answer	2363	11
Plaintiff's memorandum re defendant's interrogatories (excerpts)	2990	13

* Several exhibits bear two different exhibit numbers. In every such instance the exhibit was originally an exhibit to the Agreed Statement of Facts and bore an exhibit number preceded by the letter S, such as S-1, S-2, S-3, et cetera. Notwithstanding the fact that they bore "S" exhibit numbers, at times some were introduced in evidence with plaintiff's exhibit number and in two instances with a defendant's exhibit number. "S" exhibits bearing a Government exhibit number have been designated by the Government by the latter number, with the "S" exhibit number in parentheses, for example, "Govt. 2 (S-1)".

For complete list of "S Exhibits" see Index, page xxv.

	Original	Print
Record from the United States District Court for the Southern District of New York—Continued		
Plaintiff's answers to defendant's amended interrogatories Nos. 5 through 9 (excerpts)	3076	16
Transcript of pre-trial hearings of November 10, 1960 (excerpts)	2917	17
Appearances	2917	17
Colloquy re filing of statement of facts	2943	17
Order requiring parties to prepare list of exhibits to be offered in evidence and to file Statement of Contentions	3267	20
Stipulation	2361	22
Statement of facts	2369	23
Plaintiff's statement of contentions (excerpts)	3274	77
Plaintiff's statement setting forth the significance of documents to be offered into evidence (excerpts)	3288	80
Plaintiff's trial brief (excerpts)	3311	82
Transcript of trial hearings—stenographer's minutes, May 2, 1961-June 27, 1961	1	83
Appearances	1	83
Opening statement on behalf of Government by Mr. Elkins	2	83
Opening statement on behalf of defendant by Mr. Pettit	31	88
Introduction of evidence and discussions thereon	71	107
Offers in evidence of Government's exhibits	95	107
Offers in evidence of defendant's exhibits	160	107
Discussion of significance of Government's exhibits by Mr. Elkins	181	113
Mr. Weinstein	359	178
Mr. Elkins	467	205
Argument on behalf of Government by Mr. Elkins and Mr. Weinstein	500	209
Offers in evidence of defendant's exhibits	536	216
Discussion of significance of exhibits		
by Mr. Pettit	588	240
by Mr. Wesely	692	293
by Mr. Pettit	733	314
Colloquy	747	321
Discussion of significance of exhibits by Mr. Pettit	754	326
Colloquy	859	383
Discussion of significance of exhibits by Mr. Pettit	866	387
Discussion of significance of exhibits by Mr. Elkins	961	429
Discussion of significance of exhibits by Mr. Pettit	1009	448
Government has rested	1018	452
Testimony of Joel Gibson Stanford—		
—direct by Mr. Pettit	1026	457
—cross by Mr. Elkins	1169	535
—redirect by Mr. Pettit	1263	585
—recross by Mr. Elkins	1272	589

	Original	Print
Record from the United States District Court for the Southern District of New York—Continued		
Transcript of trial hearings—stenographer's minutes, May 2, 1961-June 27, 1961—Continued		
Opening statement by Mr. Allen T. Klots	1273	590
Objection of Government and ruling thereon	1278	592
Testimony of Miss Jessie Hutton—		
—direct by Mr. Klots	1281	594
—cross by Mr. Weinstein	1390	651
Offers of proof by Mr. Elkins	1428	672
Testimony of Miss Jessie Hutton (resumed)—		
—cross by Mr. Weinstein	1436	676
—redirect by Mr. Klots	1549a	736
—recross by Mr. Weinstein	1553	738
Charles F. Bruder—		
—direct by Mr. Klots	1556	740
Colloquy between court and counsel	1646	784
Testimony of Charles F. Bruder—		
—direct by Mr. Klots	1653	788
—by the Court	1654	788
—direct by Mr. Klots	1655	789
Colloquy between court and counsel	1656	789
Testimony of William T. Fitzgerald—		
—direct by Mr. Klots	1661	792
—cross by Mr. Elkins	1664	794
Fred F. Fairman—		
—direct by Mr. Wesely	1674	798
—cross by Mr. Elkins	1694	810
Colloquy between court and counsel	1712	816
Testimony of Fred F. Fairman (resumed)—		
—cross by Mr. Elkins	1716	818
—redirect by Mr. Wesely	1721	821
Charles F. Bruder (resumed)—		
—direct by Mr. Klots	1722	821
—cross by Mr. Elkins	1739	830
—redirect by Mr. Klots	1795	857
Stipulation and colloquy	1797	857
Testimony of George Lee Newcomb—		
—direct by Mr. Klots	1798	858
Lawrence M. Dunne—		
—direct by Mr. Klots	1800	860
Dr. Jerome B. Cohen—		
—direct by Mr. Klots	1806	863
Francis Y. Sogi—		
—direct by Mr. Wesely	1854	884
—cross by Mr. Elkins	1890	897
Charles A. Winter—		
—direct by Mr. Benbow	1896	899
—cross by Mr. Elkins	1898	901

	Original	Print
Record from the United States District Court for the Southern District of New York—Continued		
Transcript of trial hearings—stenographer's minutes, May 2, 1961-June 27, 1961—Continued		
Colloquy between court and counsel	1901	902
Testimony of Dr. Jerome B. Cohen (resumed)—		
—direct by Mr. Klots	1940	913
Defendant rests	1971	929
Volume II		
Testimony of Dodge E. Barnum in rebuttal by plaintiff—direct by Mr. Elkins	1971	929
—cross by Mr. Pettit	1987	935
—by the Court	2008	946
—cross by Mr. Pettit	2013	948
Mrs. Lilly Hovespian—		
—direct by Mr. Corcoran	2028	952
—cross by Mr. Klots	2040	956
—by the Court	2044	958
—cross by Mr. Klots	2048	961
—redirect by Mr. Corcoran	2071	970
Julius Margulies—		
—direct by Mr. Elkins	2072	970
—cross by Mr. Klots	2081	974
John H. Billings in rebuttal by Government—direct by Mr. Weinstein	2090	974
—cross by Mr. Pettit	2158	978
Colloquy between court and counsel	2258	989
Testimony of Edward J. Herbst in surrebuttal by the defendant—direct by Mr. Pettit	2263	991
—by the Court	2275	995
—direct by Mr. Pettit	2279	997
—by the Court	2281	997
Testimony of Edward J. Herbst in surrebuttal by the defendant—direct by Mr. Pettit	2285	999
—by the Court	2292	1002
—cross by Mr. Weinstein	2294	1003
Testimony of John Robert Curreri in surrebuttal by the defendant—direct by Mr. Pettit	2306	1004
—cross by Mr. Weinstein	2315	1006
Reporters' certificate (omitted in printing)	2328	

	Original	Print
Record from the United States District Court for the Southern District of New York—Continued		
COURT'S EXHIBITS	5768	1008
4—Stipulation and order re scope of the grant secured by Letters Patent, etc., dated May 16, 1961	5768	1008
7—Memorandum in aid of the Court re invention or priority date, filing and issue dates and fundamental coverage of pertinent patents, dated May 23, 1961	5787	1010
8—Memorandum in aid of the Court re legal status of pertinent patents, dated May 23, 1961	5792	1014
GOVERNMENT'S EXHIBITS	3437	1017
2 (S-1)—Letter from Patent Department, Singer Mfg. Co. to M. L. Waterman; Vice President of Singer Mfg. Co., dated April 26, 1955	3437	1017
3—Memorandum prepared by Mr. Williams of the Singer Patent Department, CAW-Z-dated June 16, 1955 re "The Purchase by Singer of the U.S. Carl Harris Patent No. 2,693,778 and the Foreign Patents and Patent Applications Corresponding to Such Patent (excerpts)	3440	1019
4—Letter from M. C. Lightner to W. P. Evans, Milan, Italy, dated September 12, 1955	3451	1022
5—Letter from Mr. Stanford, head of the Singer Patent Department to M. C. Lightner, dated September 9, 1955	3456	1025
8—Letter from W. P. Evans, Italy Singer to M. L. Waterman, dated October 10, 1955	3459	1027
9—Letter from M. L. Waterman to W. P. Evans, Milan, Italy, dated October 14, 1955	3461	1029
10—Translation of memorandum from Dr. Ernst Wiegand to Germany Singer, dated November 14, 1955 re "Zigzag Sewing Machines with a Multiple Number of Cams."	3463	1030
11 (S-2)—Agreement (Patent) between The Singer Manufacturing Company of New Jersey and Arnaldo S. p.a. Vigorelli of Italy, dated November 17, 1955	3466	1032
12—Memorandum prepared by Mr. Williams, CAW-M-dated April 14, 1958 re "Singer-Vigorelli United States Patent Interference (excerpts)	3470	1035
13—Letter from Patent Department, Singer Mfg. Co. to Leo Adamson, Frankfurt, Germany, dated December 28, 1955	3474	1037

Record from the United States District Court for the Southern District of New York—Continued.	Original	Print
GOVERNMENT'S EXHIBITS—Continued		
14—Letter from Patent Department, Singer Mfg. Co. to Dr. S. Lando, dated December 23, 1955	3476	1039
15—Letter from Italy Singer to M. L. Waterman, dated December 10, 1955	3478	1040
16—Letter from Patent Department, Singer Mfg. Co. to M. L. Waterman, dated January 19, 1956	3479	1041
17—Letter from M. L. Waterman to C. F. Baumann, dated February 6, 1956	3485	1045
18—Letter to C. F. Baumann, dated February 21, 1956	3488	1048
19—Transmittal letter to M. L. Waterman dated March 3, 1956 with enclosure of translation of Dr. Lando's report on his visit to Vigorelli, Pavia, on February 29, 1956	3489	1050
20—Letter from M. L. Waterman, Vice President to E. Winteler, Geneva, dated March 14, 1956	3495	1055
22—Letter to M. L. Waterman, dated March 23, 1956	3499	1058
23—Letter from Deriaz, Kirker and Cie to Messrs. Cruikshank & Fairweather, dated April 17, 1956	3501	1060
24—Memorandum from M. L. Waterman to M. L. Lightner, dated April 13, 1956	3502	1061
25—Translation of Agreement on basis of discussion of April 12, 1956 between Mr. Waterman, Mr. Stanford, Mr. Kirker, Mr. Winteler and Messrs. Gegauf, Senior and Junior, H. Bernhard, F. Meyer and Mr. Willi	3505	1064
26 (S-3)—Agreement between The Singer Mfg.		
27 (S-7)—Memorandum of Notes dictated at Co. and Fritz Gegauf, signed April 14, 1956	3509	1066
Milan, Friday, April 20, 1956 by M. L. Waterman	3515	1068
28—Letter, "Monday" (April 30, 1956) from Mr. Stanford to "Chet" (Williams) and "Marshall" (Breen), Patent Department	3518	1072
30—Letter from M. L. Waterman to C. F. Baumann, dated June 11, 1956	3523	1074
31—Letter from Italy Singer to M. L. Waterman, dated June 19, 1956	3524	1075
32—Letter from S. Lando to J. G. Stanford, Munich, dated September 19, 1956	3526	1077
33—Letter from Fritz Gegauf to Mr. Waterman, dated September 3, 1956	3528	1079

	Original	Print
Record from the United States District Court for the Southern District of New York—Continued		
GOVERNMENT'S EXHIBITS—Continued		
35—Letter from M. L. Waterman to Mr. Fritz Gegauf, dated September 7, 1956	3530	1080
36—Letter from J. G. Stanford, Patent Department, to Leon M. Strauss, dated September 12, 1956	3532	1081
37—Letter to Dr. S. Lando, dated October 9, 1956	3533	1082
38—Letter from Patent Department, Singer Mfg. Co. to M. L. Waterman, dated October 22, 1956	3534	1083
39—Proposed letter to Mr. Fritz Gegauf	3536	1084
40—Letter from M. L. Waterman to J. G. Stanford, dated October 23, 1956	3538	1085
41—Letter to Mr. Fritz Gegauf, dated October 24, 1956	3539	1086
42—Letter from Patent Department, Singer Mfg. Co. to M. L. Waterman, dated November 7, 1956	3544	1087
43—Transmittal letter from Mr. Stanford, Patent Department, Singer Mfg. Co. to M. L. Waterman, dated September 9, 1957 with proposed letter to Mr. Fritz Gegauf	3542	1088
44—Letter from M. L. Waterman to Mr. Fritz Gegauf, dated September 12, 1957	3545	1090
45—Letter from Mr. Fritz Gegauf to Mr. Waterman, dated September 17, 1957	3547	1092
47—Letter from Patent Department, Singer Mfg. Co. to M. L. Waterman, dated September 23, 1957	3549	1093
49—Letter from M. L. Waterman to Milton C. Lightner, dated October 17, 1957	3553	1095
50—Cable to Pyecombe for Stanford, Elizabethport, N. J. from Waterman, dated October 24, 1957	3555	1096
51—Cable from J. G. Stanford to Mr. M. L. Waterman, dated October 24, 1957	3558	1097
52—Letter from Deriaz, Kirker & Cie (G. E. Kirker) to Mr. J. G. Stanford, dated October 25, 1957	3559	1098
53—Letter from J. G. Stanford, Patent Department, Singer Mfg. to Mr. G. Kirker, dated October 30, 1957	3561	1100
55—Letter from J. G. Stanford, Patent Department, Singer Mfg. to Mr. G. Kirker, dated November 7, 1957	3565	1102
56—Letter from Deriaz, Kirker & Cie (G. E. Kirker) to Mr. J. G. Stanford, dated November 18, 1957	3567	1104

	Original	Print
Record from the United States District Court for the Southern District of New York—Continued		
GOVERNMENT'S EXHIBITS—Continued		
58 (S-10)—Agreement between The Singer Mfg. Co. and Fritz Gegauf, dated December 5, 1957	3577	1108
59—Formal assignment made December 5, 1957 by Fritz Gegauf to Singer Mfg. Co.	3580	1110
60—Letter from Singer Mfg. Co. to M. L. Waterman, dated December 6, 1957	3582	1112
62—Transmittal letter from J.G. Stanford, Patent Department Singer Mfg. Co. to D. P. Kircher, Vice President of Singer, dated December 13, 1957	3585	1114
Memorandum of J. G. Stanford's Recent Visit to Switzerland	3586	1115
63—Letter from J. G. Stanford to Mr. Gegauf, dated December 18, 1957	3601	1123
64—Transmittal letter from Patent Department, Singer Mfg. Co. to M. L. Waterman, dated July 17, 1958	3603	1124
Proposed letter to Mr. F. Gegauf	3604	1125
65—Letter from M. L. Waterman to Mr. F. Gegauf, dated July 21, 1958	3605	1125
66—Note to Mr. J. G. Stanford from M. L. Waterman, dated August 4, 1958	3606	1126
Letter from F. Gegauf to M. L. Waterman, dated July 25, 1958	3607	1127
67—Transmittal letter from Patent Department, Singer Mfg. Co. to M. L. Waterman, dated January 28, 1958	3609	1129
Vice President's Department—Summary of Patent Department Report for the Year 1957	3610	1129
68—Letter written during last week of April 1956, dated "Thursday" by Mr. Stanford to "Dear Chet" (Mr. Williams)	3613	1130
69—Letter from J. G. Stanford, Patent Department, Singer Mfg. Co. to Leo Adamson, Germany, dated January 19, 1956	3615	1132
70—Letter from J. G. Stanford, Patent Department, Singer Mfg. Co. to L. Adamson, dated March 15, 1956	3616	1133
71—Letter from Mr. Sanford, Karlsruhe to "Dear Chet" (Mr. Williams), dated "Friday morning" (April 27, 1956)	3618	1134
72 & 73—Cablegrams from Mr. Williams, Patent Department to J. G. Stanford, Germany, dated April 30, 1956	3622	1135-6
74—Letter from L. Adamson to M. L. Waterman, dated May 25, 1956	3624	1137

Record from the United States District Court for the Southern District of New York—Continued

	Original	Print
Government's Exhibits—Continued		
75—Letter from Mr. Lando, Italy, Singer to J. G. Stanford, dated June 12, 1956	3626	1139
77—Letter from Mr. Williams, Patent Department to L. Adamson, dated July 16, 1956	3629	1140
78—Letter from Mr. Waterman to M. C. Lightner (President of Singer), dated November 2, 1956 (excerpts)	3631	1141
84—Letter from Patent Department, Singer Mfg. Co. to M. L. Waterman, dated December 12, 1956	3645	1142
85—Letter from Patent Department, Singer Mfg. Co. to Messrs. Cruikshank & Fairweather, dated January 3, 1957 (excerpts)	3650	1145
86 (S-4)—Cross-licensing agreement between the Singer Manufacturing Company and Messerschmitt, A.G., dated April 16, 1957	3652	1146
87—Memorandum from "Max" (M. L. Waterman), Munich to M. C. Lightner, N.Y., dated April 18, 1957	3654	1148
88—Cablegram from Waterman to Mr. Lightner, dated April 17, 1956	3656	1149
89—Letter from Mr. Stanford, Patent Department, Singer Mfg. Co. to Dr. E. Wiegand, dated April 25, 1957	3657	1150
93—Letter from L. Adamson to J. G. Stanford, dated May 20, 1957	3666	1152
94—Letter from Mr. Williams, Patent Department, Singer Mfg. Co. to L. Adamson, dated May 24, 1957	3668	1155
95 (S-6)—Agreement between The Singer Manufacturing Company and Messerschmitt, dated June 4, 1957	3671	1157
96 (S-5)—Formal assignment made June 4, 1957 by Messerschmitt A.G. to the Singer Manufacturing Company	3673	1159
97—Letter from the Patent Department, Singer Mfg. Co. to Dr. E. Wiegand, Germany, dated July 1, 1957	3675	1160
103—Letter from M. L. Waterman to Milton C. Lightner, dated October 17, 1957	3685	1161
104—Letter from L. Adamson to J. G. Stanford dated January 24, 1958	3687	1163
105—Cablegram from J. G. Stanford to Leo Adamson, dated January 28, 1958	3691	1167
106—Letter from Frank H. Marks to Harold J. Stelzer, dated October 1, 1958	3692	1168
107—Memorandum to Mr. Bruder, Vice President of Singer, dated November 12, 1958	3695	1171

	Original	Print
Record from the United States District Court for the Southern District of New York—Continued		
GOVERNMENT'S EXHIBITS—Continued		
108—Letter from Mr. Stanford, Patent Department, Singer Mfg. Co. to D. P. Kircher, dated December 16, 1958	3698	1173
109—Letter from Mr. Williams, Patent Department, Singer Mfg. Co. to D. P. Kircher, dated January 7, 1959	3700	1174
Statement regarding license agreement between Singer and Sears, Roebuck & Company	3702	1175
111—Letter from Thure Oberg to Donald P. Kircher, dated April 18, 1959	3707	1177
113—Memorandum prepared by J. G. Stanford, April 30, 1959	3709	1178
114—Letter from Thure Oberg to Donald P. Kircher, dated April 30, 1959	3711	1179
115—Cablegram from Kircher to Thure Oberg, dated May 4, 1959	3712	1181
116—Letter from Dr. Carl Schwalb to Mr. Donald P. Kircher, dated March 9, 1959	3713	1182
117—Letter from Singer Mfg. Co. to J. G. Stanford, dated March 17, 1959	3714	1183
118—Letter from Mr. Stanford, Patent Department, Singer Mfg. Co. to D. P. Kircher, dated March 20, 1959	3715	1184
119—Proposed letter to Dr. C. Schwalb	3716	1185
120—Letter from Donald P. Kircher to Dr. Carl Schwalb of Phoenix, dated April 3, 1959	3717	1186
121—Letter from Deriaz, Kirker & Cie (G. Kirker) to Mr. Stanford, dated December 26, 1957	3718	1187
122—Letter from Mr. Stanford, Patent Department, Singer Mfg. Co. to Mr. G. Kirker, dated January 6, 1958	3719	1188
124—Letter from G. Kirker to Mr. Stanford, dated January 17, 1958	3721	1189
125—Letter from Mr. Stanford, Patent Department, Singer Mfg. Co. to Mr. G. Kirker, dated January 21, 1958	3722	1190
126—Letter from Mr. Stanford to M. L. Waterman, dated January 30, 1958 (excerpts)	3723	1191
127—Letter from Mr. Stanford, Patent Department, Singer Mfg. Co. to Mr. G. Kirker, dated February 18, 1958	3725	1192
130—Letter from M. L. Waterman, Vice President to F. Gegauf, dated May 27, 1959	3729	1193
132—Letter from Fritz Gegauf to Singer Mfg. Co., dated June 10, 1959 (excerpts)	3733	1194

Record from the United States District Court for the Southern District of New York—Continued

	Original	Print
GOVERNMENT'S EXHIBITS—Continued		
133—Letter from Deriaz, Kirker & Cie (G. Kirker) to Mr. Stanford, dated June 17, 1959	3736	1196
136—Letter from Patent Department, Singer Mfg. Co. to G. Kirker, dated July 14, 1959	3743	1199
137—Letter from M. L. Waterman to F. Gegauf, dated July 14, 1959	3745	1201
139—Forwarding letter from Deriaz, Kirker & Cie (G. Kirker) to Mr. Stanford, dated July 24, 1959	3748	1203
Executed agreement between The Singer Manufacturing Company and Fritz Gegauf, etc., dated July 22, 1959	3749	1204
Affidavit of Fritz Gegauf, dated July 22, 1959	3751	1205
141—Letter from Mr. Lightner to M. L. Waterman, dated April 8, 1957	3754	1207
142—Letter from M. L. Waterman, Frankfurt to "Milton" (Mr. Lightner), dated April 16	3757	1209
143—Memorandum from Mr. Aurell, Oriental Dept, Singer to Mr. M. L. Waterman, re "Vigorelli Machine", dated December 29, 1959	3760	1211
144—Memorandum from M. C. Lightner referred to Mr. M. L. Waterman, dated January 4, 1960	3762	1213
154—Letter from Donald P. Kircher to H. R. Crawford, Tokyo, dated March 14, 1958	3802	1213
155—Memorandum prepared by Mr. Williams of the Singer Patent Department, CAW-K, dated May 20, 1958 handed to a representative of Brother International by Mr. Waterman	3805	1215
156—Letter from J. G. Stanford to J. M. McKinnon, dated July 31, 1958	3806	1216
157—Letter from M. L. Waterman to C. F. Baumann, dated December 22, 1958	3808	1218
158—Letter from M. L. Waterman to Fritz Gegauf, dated December 22, 1958	3809	1219
159—Letter from C. F. Baumann to M. L. Waterman, dated December 30, 1958	3810	1221
160—Letter from Fritz Gegauf to Mr. Waterman, dated January 21, 1959	3811	1220
161—Letter from Assistant Vice President, Singer Mfg. Co. to J. M. McKinnon, Tokyo, dated dated January 27, 1959	3812	1222

	Original	Print
Record from the United States District Court for the Southern District of New York—Continued		
GOVERNMENT'S EXHIBITS—Continued		
163—Cablegram from M. L. Waterman, Clydebank to Geosman (Singer), dated May 2, 1955	3815	1224
169—Letter from T. Krzyzaniak, Singer Mfg. Co. to J. G. Stanford, dated January 2, 1959	3830	1225
172 (S-13)—Reissue Patent 24,370 granted October 8, 1957 to Carl Harris, assignor to The Singer Manufacturing Company for Embroidering Mechanism for Zigzag Sewing	3882	1229
173—Correspondence of U.S. Patent Office, dated December 14, 1955, April 27, 1956, May 11, 1956, August 22, 1956, June 10, 1957 and August 26, 1957 re amendments to application of Carl Harris, Serial No. 516,058 for Embroidering Mechanism for Zigzag Machines	3945	1237
174—Patent 2,832,302, granted April 29, 1958 to Fritz Gegauf, assignor, by mesne assignments, to The Singer Manufacturing Company for Sewing Machine	3980	1255
175—Correspondence of U.S. Patent Office, dated January 16, 1956, February 15, 1956 and April 4, 1956 re amendments to application of Fritz Gegauf, Serial No. 358,377 for Sewing Machine	4088	1267
177 (S-16)—Patent 2,877,726 granted March 17, 1959 to Fritz Gegauf, assignor to The Singer Manufacturing Company for Zig-Zag Sewing Machines	4219	1273
179 (S-15)—Patent 2,810,360 granted October 22, 1957 to Martin Richard Perla, assignor to The Singer Manufacturing Company for Ornamental Stitch Sewing Machines	4345	1284
183 (S-14)—Patent 2,862,468 granted December 2, 1958 to Ralph E. Johnson, assignor to The Singer Manufacturing Company for Ornamental Stitch Sewing Machines	4556	1295
184—Application of Ralph E. Johnson for Patent on and Improvement in Ornamental Stitch Sewing Machines, Serial No. 471766, and correspondence mailed January 30, 1956, September 12, 1957 and September 26, 1958	4591	1327
188 (S-22)—Statement showing Machine-Carried Multiple Cam Zigzag Sewing Machines exported to the United States from Europe which infringed any of the patents listed	2582	1332

	Original	Print
Record from the United States District Court for the Southern District of New York—Continued		
GOVERNMENT'S EXHIBITS—Continued		
189 (S-23)—Statement showing Machine-Carried Multiple Cam Zigzag Sewing Machines exported to the United States in 1957, 1958, 1959 from Europe and Japan which infringed the Second Gegauf Patent or the Perle Patent	2583	1332
190 (S-24)—Statement showing United States Sales of Household Machines by Style and Year 1952 through 1960	2584	1333
191 (S-25)—Statement showing Japanese Zigzag Sewing Machines imported into United States for years 1957, 1958 and 1959	2585	1334
192 (S-26)—Statement showing Number of Multiple Cam Japanese Zigzag Sewing Machines Imported into United States which come within Gegauf Patent No. 2,832,302 Set Forth by Manufacturer and Trade Name	2586	1335
193 (S-27)—Schedule showing Number of Multiple Cam Japanese Zigzag Sewing Machines imported into United States which do not come within Gegauf Patent No. 2,832,302 set forth by Manufacturer and Trade Name for years 1957, 1958 and 1959	2587	1335
194 (S-28)—Statement showing European Zigzag Machine Carried Multiple Cam and Replaceable Cam Sewing Machines imported into United States for years 1957, 1958 and 1959	2588	1336
195 (S-29)—Statement showing Number of Multiple Cam European Zigzag Sewing Machines imported into the United States which come within Gegauf Patent No. 2,832,302 set forth by Manufacturer and Trade Name for the years 1957, 1958 and 1959	2589	1336
196 (S-30)—Statement showing Number of Multiple Cam European Zigzag Sewing Machines imported into the United States which do not come within Gegauf Patent No. 2,832,302, set forth by Manufacturer and Trade Name	2590	1337
197 (S-86)—Statement showing Manufacturer, Model Name, Type of Machine and Price	2675	1338
199—Letter from Patent Department, Singer Mfg. Co. to Mr. G. Kirker, dated October 29, 1957	5001	1340
200—Advertisement on Singer Slant-O-Matic that appeared in 13 magazines during the Spring of 1959	5005	1343
201—Instruction book for Singer Slant-O-Matic 401 by The Singer Mfg. Co. (excerpts)	5006	1344

	Original	Print
Record from the United States District Court for the Southern District of New York—Continued		
GOVERNMENT'S EXHIBITS—Continued		
203—Advertisement appearing in Vogue Pattern Book, June-July 1957 for Singer Sewing Machines	5133	1350
205, 205A and 205D—Advertisements appearing for Brother International Corporation showing various models of their sewing machines	5134	1351
208—Advertisement of May, 1959 for New Singer Slant-Needle Series	5143	1354
208B—Advertisement for December 1959 for various models of Singer Sewing Machine appearing in 6 magazines	5145	1355
208 C, D, E & F—Script for TV announcements for Singer Slant Needle family as recorded August 19, 1959, October 9, 1959 and May 20, 1959	5146	1357
DEFENDANT'S EXHIBITS		
1—Letter from Mr. Stanford, Patent Department, Singer Mfg. Co. to M. L. Waterman, dated March 25, 1954	5163	1365
2—Letter from M. L. Waterman to J. G. Stanford, dated February 11, 1955	5168	1368
3—Letter from Patent Department, Singer Mfg. Co. to M. L. Waterman, dated February 23, 1955	5169	1369
4—Letter from Mr. Stanford, Patent Department, Singer Mfg. Co. to M. L. Waterman, dated December 2, 1954	5171	1370
5—Letter from Patent Department, Singer Mfg. Co. to M. L. Waterman, dated December 16, 1954	5174	1372
6—Transmittal memorandum to Mr. W. P. Evans, Italy from M. L. Waterman with letter dated December 20, 1954	5182	1376
7—Transmittal memorandum to Mr. L. Adamson, Germany from M. L. Waterman with letter dated December 20, 1954	5185	1378
8—Letter from Mr. Adamson to M. L. Waterman, dated January 3, 1955	5188	1380
9—Letter from Mr. Evans, Italy Singer to Mr. M. L. Waterman, dated January 12, 1955	5190	1382
11—Letter from Patent Department, Singer Mfg. Co. to Dr. Lando, Italy Singer, dated June 16, 1955	5194	1383
12—Letter from M. C. Lightner to W. P. Evans, dated August 16, 1955	5197	1385

Record from the United States District Court for the Southern District of New York—Continued	Original	Print
DEFENDANT'S EXHIBITS—Continued		
13—Letter from W. P. Evans to M. C. Lightner, dated August 30, 1955	5199	1387
15—Letter from Italy Singer to M. L. Waterman, dated October 20, 1955	5202	1388
17—Letter from W. P. Evans to M. L. Waterman, dated October 24, 1955	5205	1390
18—Telegram from Patent Department, Singer Mfg. Co. to Mrs. E. L. Snider, dated October 25, 1955	5206	1391
19—Letter from Patent Department, Singer Mfg. Co. to James M. McKinnon, Tokyo, dated October 25, 1955	5207	1392
20—Letter from Italy Singer to attention of Mr. A. Vigorelli, dated November 19, 1955	5211	1394
21—Letter from Singer Sewing Machine Company, Tokyo to Mr. J. G. Stanford, dated November 26, 1955	5212	1395
22 & 23—Letters from Singer Sewing Machine Company, Tokyo to Mr. J. G. Stanford, dated December 30, 1955 and January 20, 1956	5213	1396-98
24—Letter from Patent Department, Singer Mfg. Co. to Mr. James H. McKinnon, dated January 26, 1955	5217	1401
25—Letter from Singer Sewing Machine Co., Tokyo to Mr. J. G. Stanford, dated January 28, 1956	5219	1402
26—Letter from Patent Department, Singer Mfg. Co. to Mr. J. M. McKinnon, dated February 7, 1956	5221	1405
27—Letter to Mr. Edgar Winteler, dated March 1, 1956	5224	1406
28—Letter from Mr. Stanford, Patent Department, Singer Mfg. Co. to M. L. Waterman, dated March 8, 1956	5225	1408
Proposed letter from Mr. Stanford to Mr. E. Winteler		
29—Letter from Vice President to C. F. Baumann, dated March 9, 1956	5229	1410
30—Cablegram from Waterman, dated April 13, 1956 re "Yesterday's Steckborn Conference"	5230	1411
31—Bernina Agreement—dictated by J. G. Stanford at Zurich, April 15, 1956	5231	1411
Cablegram sent to Mr. Lightner by Mr. Waterman (dictated over phone), April 16, 1956	5238	1419

	Original	Print
Record from the United States District Court for the Southern District of New York—Continued		
Defendant's Exhibits—Continued		
34—Letter from Patent Department, Singer Mfg. Co. to Mr. K. Gebhardt, dated February 11, 1957	5241	1420
35—Letter from Patent Department, Singer Mfg. Co. to Mr. M. L. Waterman, dated March 13, 1957	5243	1421
Patent Department Report for the Year 1956	5244	1421
36 (S-8)—Agreement between Singer and Fritz Gegauf, not signed or dated	5247	1422
39—Letter from Patent Department, Singer Mfg. Co. to D. P. Kircher, dated April 16, 1958	5256	1425
40—Memorandum by Mr. Waterman, Subject: Second Visit of Mr. M. Yasui, President of Brother Company, at 149 Broadway, dated May 20, 1958	5257	1426
41—Letter from Mr. Crawford, Singer Sewing Machine Company to Mr. J. M. McKinnon, Tokyo, dated August 5, 1958	5259	1427
42—Letter from Mr. Stanford, Patent Department, Singer Mfg. Co. to Mr. M. L. Waterman, dated August 26, 1958	5260	1428
43—Letter from Patent Department, Singer Mfg. Co. to M. L. Waterman, dated September 17, 1958	5262	1430
44—Letter from Patent Department, Singer Mfg. Co. to M. L. Waterman, dated December 10, 1958	5263	1431
45—Transmittal letter from Patent Department, Singer Mfg. Co. to M. L. Waterman, dated January 14, 1959	5265	1433
Patent Department Report for the year 1958	5266	1433
46—Letter from Leon Jolson, Necchi Sewing Machine Sales Corp. to Mr. Donald Kirchner, dated February 2, 1959	5269	1436
48—Letter to Mr. Leon Jolson, Necchi Sewing Machine Sales Corp. dated February 26, 1959	5271	1437
49—Letter from David S. Kane to Branville M. Brumbaugh, dated April 29, 1959	5272	1438
50—Letter from "Brummie" (B. M. Brumbaugh) to David S. Kane, dated April 30, 1959	5274	1440
51—Letter from Singer Mfg. Co., Director to United States Treasury Department, Bureau of Customs, dated May 13, 1959 (excerpts)	5276	1441
52—Letter from Granville M. Brumbaugh to Frank W. Schattschneider, dated May 18, 1959	5281	1442

Record from the United States District Court for the Southern District of New York—Continued	Original	Print
DEFENDANT'S EXHIBITS—Continued		
53—Letter from Patent Department, Singer Mfg. Co. to Donald P. Kircher, President, dated October 14, 1959	5282	1443
55—Letter from Patent Department, Singer Mfg. Co. to M. L. Waterman, Vice President, dated August 26, 1958	5286	1444
56—Letter from Patent Department, Singer Mfg. Co. to L. Adamson, Frankfurt, Germany, dated December 31, 1958	5288	1445
57—Letter from Fritz Gegauf, Sr. to M. L. Waterman, dated March 6, 1959	5289	1446
58—Letter from United States Patent Office Examiner to Michael S. Striker, re Serial No. 393,760	5290	1447
59—Letter from Michael S. Striker to Cicogna Franco & C, Italy, dated January 23, 1956 re Serial No. 393,760	5292	1449
Volume III		
61—Letter from H. J. Stelzer, Sears, Roebuck and Co., to Mr. C. F. Bruder, dated October 15, 1958	5296	1451
62—Letter from Singer Sewing Machine Co., Vice President to Mr. H. J. Stelzer, Sears Roebuck & Co., dated November 13, 1958	5297	1452
63—Letter from H. J. Stelzer, Sears Roebuck & Co. to Mr. C. F. Bruder, dated November 21, 1958	5298	1453
64—Letter from H. J. Stelzer, Sears, Roebuck & Co. to Mr. C. F. Bruder, dated January 8, 1960	5299	1454
66—Letter from M. L. Waterman to M. C. Lightner, dated April 26, 1957	5304	1455
67—Memorandum from M. L. Waterman to Mr. D. P. Kircher, dated November 25, 1959	5306	1457
71—Memorandum from E. Herbst to Mr. M. L. Waterman, dated November 10, 1959 re "Evaluation of Vigorelli Machines"	5317	1460
76—Memorandum from D. G. Robbins to Mr. M. L. Waterman, dated December 28, 1958 re "Vigorelli Embroidery Machine". (excerpts)	5335	1464
77—Letter from Vice President to Mr. Arnaldo Vigorelli, Pavia, Italy, dated January 18, 1960	5337	1465
78—Cablegram from Waterman to Singer for Lightner, dated November 17, 1955	5338	1467

Record from the United States District Court for the Southern District of New York—Continued

	Original	Print
DEFENDANT'S EXHIBITS—Continued		
79—Letter from JBS to "Dear Colleagues", dated 5/9 (1956) (excerpts)	5339	1467
80—Letter from Patent Department, Singer Mfg. Co. to Dr. S. Lando, dated May 22, 1956	5343	1468
81—Letter from Italy Singer to J. G. Stanford, dated May 24, 1956	5351	1474
82—Letter from Ing. Barzano & Zanardo to the attention of Dr. Lando, dated May 23, 1956	5352	1475
84—Letter from Ing. Barzano & Zanardo to Dr. Lando, dated June 7, 1956	5354	1477
85—Letter from L. Adamson to Mr. J. G. Stanford, dated June 15, 1956	5359	1482
86—Letter from Patent Department, Singer Mfg. Co. to L. Adamson, dated June 27, 1956	5361	1484
87—Letter from Patent Department, Singer Mfg. Co. to M. L. Waterman, dated July 10, 1956	5363	1486
89—Letter from M. L. Waterman to L. Adamson, Frankfurt, Germany, dated August 8, 1956 (excerpts)	5365	1487
90—Letter from H. A. Toulmin, Jr. to Singer Mfg. Co., dated March 1, 1957 re "Agreement—Singer Mfg. Co.-Messerschmitt"	5368	1489
"Agreement between Singer Mfg. Co. and Messerschmitt, dated February 11, 1957	5369	1490
91—Letter from Patent Department, Singer Mfg. Co. to Toulmin & Toulmin, dated March 8, 1957	5371	1492
92—Letter from Dr. E. Wiegand to Dr. Stanford, dated May 14, 1957 re "Singer-Messerschmitt Patent Agreement, U.S. Serial No. 548,481	5373	1493
93—Transmittal letter from Dr. E. Wiegand to Mr. Stanford, dated May 16, 1957 re "Singer-Messerschmitt Patent Agreement", U.S. Serial No. 548,481	5376	1496
Incomplete copy of Agreement between Singer Mfg. Co. and Messerschmitt	5377	1496
Translation of Memorandum of conference between Fuchshuber, Busselmeier & Wiegand, dated May 10, 1957	5379	1498
Draft for new document (Agreement)	5382	1499
94—Letter from Dr. E. Wiegand to Mr. Stanford, dated May 14, 1957	5384	1501
95—Translation of memorandum of conference at Frankfurt/Main on October 14, 1957 between Waterman, Stanford, Busselmeier, Kruger and Niemann	5386	1502

	Original	Print
Record from the United States District Court for the Southern District of New York—Continued		
DEFENDANT'S EXHIBITS—Continued		
96—Undated agreement between The Singer Mfg. Co. and Messerschmitt	5395	1508
97—Letter from L. Adamson to J. G. Stanford, dated January 30, 1958 1 re: Agreement between Messerschmitt A.G. and Singer Mfg. Co. (Foreign Patents)	5401	1513
114B—Instruction book for the Borletti 1102 Super-de-luxe automatic (excerpts)	5405	1517
119—Patent Notice employed by Singer on Its Machine Commencing with the Year 1958	5468	1525
124—Defendant's motion for stay filed in United States District Court for the Southern District of New York in the case of The Singer Manufacturing Company v. Brother International Corp., C.A. No. 133-350 (excerpts)	5500	1525
Exhibit A—Tariff Commission postpones decision in Sewing Machines Investigation	5509	1526
127—Letter from T. Krzyzaniak, Singer Mfg. Co. to J. G. Stanford, dated August 13, 1959	5538	1528
128—Letter from Patent Department, Singer Mfg. Co. to M. L. Waterman, dated August 20, 1959	5539	1529
129—Letter to J. G. Stanford, dated June 22, 1955	5540	1530
130—Letter from Patent Department, Singer Mfg. Co. to Mr. Charles D. Reed, Brazil, dated November 28, 1956 (excerpts)	5541	1531
131—Letter from Charles A. Williams, Attorney for Messerschmitt to U.S. Patent Office re Serial 548,481	5545	1532
132—Letter to J. G. Stanford from U.S. Patent Office re Serial 548,481	5546	1533
133—Statement showing provisions of Singer-Vigorelli License Agreement, Singer-Gegauf License Agreement and Singer-Messerschmitt License Agreement	5547	1535
134—Statement showing Singer Patents and Singer Machines Covered	5548	1537
135—Statement showing Date of License Agreements, Assignments and Conferences	5549	1538
136—Comparison statement showing Mechanical Elements of Gegauf, Patent No. 2,832,302 as described in Claim 1 and Mechanical Elements of Harris Reissue Patent Application Serial No. 516,058 as described in Claim 22	5550	1539

	Original	Print
Record from the United States District Court for the Southern District of New York—Continued		
DEFENDANT'S EXHIBITS—Continued		
137—Comparison statement showing Mechanical Elements of Gegauf, Patent No. 2,832,302 as described in Claim 1, Mechanical Elements of Harris Patent No. Re 24,370 as described in Claim 5, Mechanical Elements of Harris Patent No. Re 24,370 as described in Claim 6 and Mechanical Elements of Harris Patent No. Re 24,370 as described in Claim 7	5551	1540
138—Note stating "Gegauf wants a million marks for his patent, etc" marked Sunday	5552	1541
146B—Photograph captioned "Here's a feature-by-feature comparison of the fully automatic Necchi and a leading competitive semi-automatic machine	5553	1543
151—Singer Stitch Pattern Comparison Chart 401 and 403 Machines	5555	1544
152—Advertisement of Singer Sewing Centers showing Slant-Needle Singer to do zigzag stitching automatically appearing in 4 magazines for April 1957	5556	1545
153—Statement showing Dollar Amount of Advertising Expenditures for Defendant's Class 404, 403, and 401 Household Sewing Machines During the Period 1957 through 1960	5557	1547
154—Advertisement for Singer Sewing Centers for Singer Slant-O-Matic appearing in 6 magazines for Fall, 1957	5558	1549
155—Advertisement for Singer Sewing Centers presenting the Singer Slant-O-Matic appearing in 5 magazines for February 1958	5559	1550
156—Advertisement for Singer Sewing Centers captioned "A present with a future—if it's a Singer" appearing in 9 magazines for December 1957	5560	1551
157—Advertisment for Singer Sewing Centers captioned "What is Zig-Zag Sewing?" appearing in 15 magazines for Fall 1960	5561	1552
158—Advertisement for Singer Sewing Centers captioned "What's the newest slant on holiday sewing?" appearing in 11 magazines for Autumn-Winter 1960	5562	1553
159—Statement showing Comparative Sales of All Singer Household Sewing Machines for the Years 1958-1960	5563	1555
160—Graphic presentations of Comparative Sales of the Singer 401, 403 and 404 Sewing Machines and Their Predecessors for the years 1958-1960	5564	1557

	Original	Print
Record from the United States District Court for the Southern District of New York—Continued		
DEFENDANT'S EXHIBITS—Continued		
161—Graphic presentations of Comparison of Sales with Advertising Expenditures of the Singer 401, 403 and 404 Sewing Machines and Their Predecessors for the years 1958-1960	5565	1558
162—Graphic presentations of Comparative Sales of All Singer Household Sewing Machines for the years 1958-1960	5566	1559
163—Statement showing Comparison of Sales with Advertising Expenditures of the Singer 401, 403 and 404 Sewing Machines and Their Predecessors for the years 1958-1960	5567	1561
164—Advertisement for Singer Sewing Center captioned "Yours for 3 Whole Days" featuring the Slant-O-Matic	5568	1563
168—Chart captioned "COMPARE" These important features of the Singer Slant-O-Matic with machines from 4 other sources	5574	1564
169—Pamphlet, Shop Meeting Guide, entitled. "Selling Singer Superiority"	5575	1565
170—White Sewing Machine Corporation—Annual Report for Year ending December 31, 1957 (excerpts)	5579	1569
172—Statement showing Production and Sales in the United States of Singer Household Sewing Machines for the years 1947 through 1959	5599	1570
173—Paragraph 150 of the Statement of Facts captioned "Exhibits S-432 to S-500 are true copies of genuine original advertisements which respectively appeared in the mail order catalog listed below, etc.	5601	1571
S Exhibits annexed to Defendant's 173:		
S-433—Advertisement of Signature Sewing Machines appearing in Wards catalog, Fall-Winter 1960	5605	1573
S-452 & S-453—Advertisements of various models of Kenmore Sewing Machines appearing in Sears Catalog, Spring-Summer 1960	5621	1574
S-474—Advertisement of various models of Vogue Sewing Machine and Necchi appearing in Spiegels Catalog, Fall-Winter 1960	5648	1576
S-486—Advertisement of various models of Aldens Sewing Machine appearing in Aldens Catalog, Fall-Winter 1960	5658	1577

Record from the United States District Court for the Southern District of New York—Continued

	Original	Print
DEFENDANT'S EXHIBITS—Continued		
175—Graphic presentations of Japanese Sewing Machines Imported into United States for years 1957, 1958 and 1959	5675	1578
184—Statement showing Imports into the United States of Singer Household Sewing Machines Valued Over $10 for the years 1947 through 1959	5743	1579
185 and 186—Statements of "United States Imports of Sewing Machines for Consumption, Calendar Years 1947 through 1959 and 1948 through 1960" prepared by U.S. Department of Commerce, Bureau of the Census	5745	1581-82
187—Table 6A—Quantity Value of Products Shipped by All Manufacturing Establishments, for the United States: 1954 and 1947 from Manufactures-Industry Statistics	5748	1583
188—Table of "Production, and Quantity and Value of Products Shipped by All Manufacturing Establishments for the United States 1958, dated June 12, 1961, prepared by Department of Commerce, Bureau of the Census	5750	1585
189—Statement showing Units and % of Total Japanese Imports for the Years 1957, 1958 and 1959 for various models of sewing machines	5751	1586
191—Graphic presentations of Comparison of U.S. Singer Production and Imports to Japanese, European & Other Non-Singer Imports & Other Non-Singer U.S. Production of Household Sewing Machines for the Years 1947-59	5753	1587
192—Graphic presentations of Comparison of U.S. Singer Production & Imports to Japanese, European & Other Non-Singer Imports & Other Non-Singer U.S. Production of Household Sewing Machines for the years 1947-59	5755	1588
194—Article entitled "Brother Markets Unit It Calls 'Housewife Engineered'" from publication, Behind The Scenes, November 1958	5756	1589
195 and 197—Advertisements of Brother Sewing Machines showing various models	5757	1591-92
199—Paragraph 3.3 entitled "Radial Cam Layout Distortion" with diagrams	5764	1593
200—Statement of "Manufacture and Assembly of 401 Machine Cams"	5765	1594

Record from the United States District Court for the Southern District of New York—Continued	Original	Print
S EXHIBITS		
S-11—Complaint of the Singer Manufacturing Company filed before the U.S. Tariff Commission	2479	1596
S-17—Statement captioned "During the period from January 1957 to December 1959, the following U.S. companies have engaged in importing, assembling and or distributing machine-carried multiple cam, replaceable cam, and/or manual zigzag sewing machines manufactured in Japan by the manufacturers listed	2574	1618
S-18—Statement showing names of Japanese manufacturers exporting zigzag sewing machines to United States and model names	2575	1619
S-20—Statement captioned "During the period from January 1957 to December 1959, the following U.S. companies have engaged in importing, assembling and or distributing machine-carried multiple cam, replaceable cam, and/or manual zigzag sewing machines manufactured in Europe by the manufacturers listed	2580	1621
S-21—Statement showing names of European manufacturers exporting zigzag sewing machines to United States and model names	2581	1622
S-31, S-32, S-33, S-34—Excerpts from "Machinery Exports Section, Heavy Industry Bureau, Ministry of International Trade & Industry" giving Lists of Approved Exports of Family Sewing Machines and Destinations for the years 1957, 1958, 1959 and 1960	2591	1623
S-39—Advertisement for Free Westinghouse Sewing Machine captioned "If You're Not Selling this Machine You're Working Too Hard."	2598	1627
S-43—Advertisement for various models of Fleetwood Sewing Machine	2602	1628
S-61—Advertisement for Borletti—New Home Sewing Machine Company	2622	1630
S-72—Advertisement for various models of Brother Sewing Machine from publication, Behind The Scenes, March 1960	2633	1631
S-87, S-88, S-89, S-90, S-91, S-92—Lists for Multiple Cam, Replaceable Cam and Manual showing Model Name, Retailer, Initial Price at Which Store Willing To Sell & Single Price Specified by Store	2676	1633

	Original	Print
Record from the United States District Court for the Southern District of New York—Continued		
Plaintiff's proposed findings of fact and conclusions of law (excerpts)	6117	1647
Plaintiff's memorandum relative to defendant's proposed findings (excerpts)	6195	1650
Plaintiff's post trial brief (excerpts)	6358	1652
Amended and corrected opinion, Ryan, J., dated May 11, 1962	6759	1653
Judgment	6840	1718
Notice of appeal to the Supreme Court of the United States	6842	1719
Orders extending time in which to docket case	6920	1721
Order noting probable jurisdiction	6925	1723

S- EXHIBITS

		Original	Print
S-1	(Gov't. Ex. 2)	3437	1017
S-2	(Gov't. Ex. 11)	3466	1032
S-3	(Gov't. Ex. 26)	3509	1066
S-4	(Gov't. Ex. 86)	3652	1146
S-5	(Gov't. Ex. 96)	3673	1159
S-6	(Gov't. Ex. 95)	3671	1157
S-7	(Gov't. Ex. 27)	3515	1068
S-8	(Def. Ex. 36)	5247	1422
S-10	(Gov't. Ex. 58)	3577	1108
S-11		2479	1596
S-12	(Gov't. Ex. 174)	3980	1255
S-13	(Gov't. Ex. 172)	3882	1229
S-14	(Gov't. Ex. 183)	4556	1295
S-15	(Gov't. Ex. 179)	4345	1284
S-16	(Gov't. Ex. 177)	4219	1273
S-17		2574	1618
S-18		2575	1619
S-20		2580	1621
S-21		2581	1622
S-22	(Gov't. Ex. 188)	2582	1332
S-23	(Gov't. Ex. 189)	2583	1332
S-24	(Gov't. Ex. 190)	2584	1333
S-25	(Gov't. Ex. 191)	2585	1334
S-26	(Gov't. Ex. 192)	2586	1335
S-27	(Gov't. Ex. 193)	2587	1335
S-28	(Gov't. Ex. 194)	2588	1336
S-29	(Gov't. Ex. 195)	2589	1336
S-30	(Gov't. Ex. 196)	2590	1337
S-31		2591	1623
S-32		2592	1624
S-33		2593	1625
S-34		2594	1626
S-39		2598	1627
S-43		2602	1628
S-61		2622	1630
S-72		2633	1631
S-86	(Gov't. Ex. 197)	2675	1338
S-87		2676	1633
S-88		2677	1635
S-89		2678	1638
S-90		2679	1641
S-91		2680	1643
S-92		2681	1646
S-433	(Def. Ex. 173)	5605	1573
S-452	(Def. Ex. 173)	5624	1574
S-453	(Def. Ex. 173)	5625	1575
S-474	(Def. Ex. 173)	5648	1576
S-486	(Def. Ex. 173)	5658	1577

[fol. 2350] [File endorsement omitted]

IN UNITED STATES DISTRICT COURT, SOUTHERN DISTRICT OF NEW YORK

Civil Action No. 154-108

UNITED STATES OF AMERICA, Plaintiff,

v.

THE SINGER MANUFACTURING COMPANY, Defendant

COMPLAINT—Filed December 22, 1959

The United States of America, by its attorneys acting under the direction of the Attorney General of the United States, brings this action against the defendant named herein, and complains and alleges as follows:

I

Jurisdiction and Venue

1. This complaint is filed and this action is instituted against the defendant named herein under Section 4 of the Act of Congress of July 2, 1890, c. 647, 26 Stat. 209, as amended (15 U.S.C. Sec. 4), entitled "An Act to protect trade and commerce against unlawful restraints and monopolies," commonly known as the Sherman Act, in order to prevent and restrain continuing violations by the defendant, as hereinafter alleged, of Sections 1 and 2 of the Sherman Act.

2. The defendant maintains an office, transacts business and is found within the Southern District of New York.

II

The Defendant

3. The Singer Manufacturing Company, a corporation organized and existing under the laws of the State of New Jersey and having a principal place of business in New York, New York, is hereby made a defendant herein. It is engaged primarily in the manufacture of sewing ma-

chines, including automatic zigzag sewing machines. It [fol. 2351] sells such machines in the United States through its wholly-owned subsidiary, the Singer Sewing Machine Company.

4. Whenever in this complaint reference is made to any act, deed, or transaction on the part of the defendant, such allegation shall be deemed to mean that the officers, directors, agents or employees of the defendant authorized, ordered or did such act, deed or transaction for, or on behalf of, the defendant while actively engaged in the management, direction and control of its affairs.

III

Co-Conspirators

5. Fritz Gegauf, A.G., Bernina Nahmaschinen Fabrik (hereinafter referred to as "Gegauf"), a corporation organized and existing under the laws of the Republic of Switzerland and having a principal place of business in Steckborn, Switzerland is hereby named as a co-conspirator herein. It is engaged, among other things, in manufacturing automatic zigzag sewing machines in Switzerland and exporting such machines to various countries of the world including the United States.

6. Arnaldo Vigorelli, S.p.A., a corporation organized and existing under the laws of the Italian Republic and having a principal place of business in Pavia, Italy, is hereby named as a co-conspirator herein. It is engaged, among other things, in the business of manufacturing automatic zigzag sewing machines in Italy and exporting such machines to various countries of the world including the United States.

IV

Definitions

7. As used herein:

(a) "Automatic zigzag sewing machine" means a household sewing machine which automatically produces, in addition to straight stitches and without any artistry on the part of the operator, various ornamental and functional zigzag stitch [fol. 2352] patterns, the preselection of which can

be made by the user automatically through a device, such as a dial, handle or knob, located on the exterior of the machine;

(b) "Patent rights" means United States Letters Patent, all applications therefor, and all re-issues, continuations, divisions or extensions thereof.

V

Nature of Trade and Commerce Involved

8. Household sewing machines are designed and sold for use principally in the home for personal sewing needs. There are two basic types of such machines, the so-called "straight stitch" machine which sews only in a straight line and the "zigzag" machine, which, in addition to producing a straight stitch, is capable of sewing various ornamental and functional zigzag stitches. There are several types of zigzag sewing machines differing as to the extent of their automatic features.

9. The automatic zigzag sewing machine as herein defined, is the most recent development in the household sewing machine industry. Since the introduction of automatic zigzag sewing machines a few years ago, their sales have been steadily increasing in proportion to the sales of all other types of machines. In 1958, the defendant sold more units of automatic zigzag sewing machines than of any other single type of household sewing machine and its volume of sales thereof amounted to approximately 45 per cent of its total gross sales of all types of household sewing machines.

10. The defendant is virtually the sole manufacturer of household sewing machines in the United States and is the only domestic manufacturer of automatic zigzag sewing machines. The defendant's only competition in the sale and distribution of automatic zigzag sewing machines in the United States is presented by imports from foreign nations. Such imports account for approximately 34 per [fol. 2353] cent of the retail sales made in the United States. About 10 per cent of the total market is represented by sales of machines imported from European nations and about 24 per cent of it is represented by imports from Japan.

11. Automatic zigzag sewing machines are manufactured by the defendant in the states of New Jersey and South Carolina and are sold and distributed through its subsidiary, the Singer Sewing Machine Company, in interstate trade and commerce to purchasers located in all of the various states of the United States. Automatic zigzag sewing machines manufactured in Europe and Japan are imported into the United States principally by various independent importing and distributing companies which ship and sell them in interstate trade and commerce to retailers and wholesale distributors located in the various states of the United States.

12. The annual gross retail sales of automatic zigzag sewing machines in the United States exceeds $60,000,000. The defendant manufactures and sells approximately 66 per cent of all such machines and its annual gross revenue therefrom is approximately $48,000,000.

VI

Offenses Charged

13. Since at least 1956, the exact date being to the plaintiff unknown, and continuing to the date of filing of this complaint, the defendant and the co-conspirators have been engaged in an unlawful combination and conspiracy to restrain and in an unlawful combination and conspiracy to monopolize for the defendant, and the defendant has unlawfully attempted to monopolize, the aforesaid interstate and foreign trade and commerce in the importation, sale and distribution of automatic zigzag sewing machines in violation of Sections 1 and 2 of the Sherman Act. The defendant threatens to and will continue said offenses unless the relief hereinafter prayed for is granted.

14. The aforesaid combination and conspiracy to restrain and to monopolize consisted of a continuing agreement and concert of action between the defendant and the co-conspirators, the substantial terms of which have been and are that:

[fol. 2354] (a) the co-conspirator Gegauf assign its patent rights to the defendant for the purpose of enabling the defendant to prevent the importation

into the United States of automatic zigzag sewing machines manufactured in Japan;

(b) the defendant use the patent rights assigned to it by Gegauf, in conjunction with its own patent rights for the purpose of excluding the importation into the United States of automatic zigzag sewing machines of foreign manufacture; and

(c) the defendant and co-conspirators determine which European manufacturers shall be permitted to export to the United States foreign manufactured automatic zigzag sewing machines.

15. Pursuant to the aforesaid combination and conspiracy to restrain and to monopolize, the defendant and the co-conspirators did those things which, as heretofore alleged, they combined and conspired to do.

16. In carrying out the aforesaid attempt to monopolize, the defendant has:

(a) obtained the assignment of patent rights from Gegauf for the purpose of enabling the defendant to prevent the importation into the United States of automatic zigzag sewing machines manufactured in Japan;

(b) used the patent rights assigned to it by Gegauf, in conjunction with its own patent rights, to exclude importation into the United States of automatic zigzag sewing machines of foreign manufacture; and

(c) determined, in conjunction with the co-conspirators, which European manufacturers would be permitted to export to the United States foreign manufactured automatic zigzag sewing machines.

[fol. 2355]

VII

Effects

17. The aforesaid offenses, as intended by the defendant and the co-conspirators, have had, among others, the following effects:

A. United States importers, distributors and retailers dealing in automatic zigzag sewing machines of

foreign manufacture have been precluded from importing, distributing and selling such machines in a market free from unlawful restraints.

B. Defendant has maintained a position of domination and control in the manufacture, sale and distribution of automatic zigzag sewing machines in the United States.

C. Consumers have been deprived of the opportunity of purchasing automatic zigzag sewing machines in a free and competitive market.

Prayer

Wherefore, the plaintiff prays:

1. That the Court adjudge and decree that the defendant and the co-conspirators have combined and conspired to restrain and have combined and conspired to monopolize for the defendant, and that the defendant has attempted to monopolize, interstate and foreign trade and commerce in automatic zigzag sewing machines, in violation of Sections 1 and 2 of the Sherman Act.

2. That the defendant and its successors, officers, directors, managers, agents, representatives, employees, and all persons or corporations acting or claiming to act under, through or on behalf of them or any of them be perpetually enjoined and restrained from continuing to carry out, directly or indirectly, the aforesaid combination and conspiracy to restrain and to monopolize, and the attempt to monopolize, the aforesaid interstate and foreign trade and commerce in automatic zigzag sewing machines, or any [fol. 2356] combination and conspiracy having like or similar purposes and effects.

3. That the Court adjudge and decree that the defendant has used patent rights unlawfully in instituting, effectuating, and maintaining the aforesaid combination and conspiracy to restrain and to monopolize, and in attempting to monopolize, and enter such orders relating to any and all of its present and future patent rights as the Court may deem appropriate and necessary to dissipate the effects of the violations herein alleged, and to establish free and unfettered competition in the trade and commerce herein described.

4. That the plaintiff have such other, further and different relief as the nature of the case may require and the Court may deem just and proper in the premises.

5. That the plaintiff recover the cost of this suit.

Dated: New York, New York December 22, 1959.

/s/ John D. Swartz. /s/ William J. Elkins. /s/ Edward F. Corcoran, Attorneys, Department of Justice.

/s/ William P. Rogers, Attorney General. /s/ Robert A. Bicks, Acting Assistant Attorney General. /s/ Raymond M. Carlson, /s/ Richard B. O'Donnell, Attorneys, Department of Justice.

[fol. 2357] [File endorsement omitted]

IN UNITED STATES DISTRICT COURT, SOUTHERN DISTRICT OF NEW YORK

[Title omitted]

Civil Action No. 154-108

ANSWER—filed January 12, 1960

Defendant, The Singer Manufacturing Company, for its Answer to the Complaint, alleges, avers and denies as follows:

1. With respect to Paragraph 1 of the Complaint, Defendant admits that this Court has jurisdiction over the cause of action alleged in the Complaint, but denies that it has committed any of the acts of restraint or conspiracy as complained of in said Complaint, and denies that Plaintiff is entitled to the relief prayed for in the said Complaint.

2. Defendant admits the allegations of Paragraph 2 of the Complaint.

3. Defendant admits the allegations of Paragraph 3 of the Complaint.

4. Answering Paragraph 4 of the Complaint Defendant

admits that from time-to-time its officers, directors, agents and employees are authorized to and in fact do carry out certain transactions for and on behalf of the Defendant but Defendant denies that it or its officers, directors, agents and employees have engaged in or committed or caused [fol. 2358] Defendant to engage in or commit any of the acts of restraint or conspiracy as complained of in said Complaint.

5. Answering Paragraph 5 of the Complaint, Defendant admits that Fritz Gegauf A.G., Bernina Nahmaschinen Fabrik (hereinafter referred to as "Gegauf") is a corporation organized and existing under the laws of the Republic of Switzerland, has a principal place of business in Steckborn, Switzerland and is engaged, among other things, in manufacturing automatic zigzag sewings machines in Switzerland and exporting such machines to various countries of the world including the United States. Defendant denies that Defendant and Gegauf conspired to engage in or have been engaged in any unlawful conspiracy or combination.

6. Answering Paragraph 6 of the Complaint, Defendant admits that Arnaldo Vigorelli, S.p.A., is a corporation organized and existing under the laws of the Italian Republic, has a principal place of business in Pavia, Italy, and is engaged, among other things, in the business of manufacturing automatic zigzag sewing machines in Italy and exporting such machines to various countries of the world including the United States. Defendant denies that Defendant and Vigorelli conspired to engage in or have been engaged in any unlawful conspiracy or combination.

7(a). Defendant admits that Paragraph 7(a) of the Complaint defines one type of automatic zigzag sewing machine and that as used in the Complaint the words "automatic zigzag sewing machine" refer to such type of machine, but Defendant denies any and every implication that this definition includes all types of automatic zigzag sewing machines.

[fol. 2359] 7(b). Defendant admits the allegations of Paragraph 7(b) of the Complaint.

8. Defendant admits the allegations of Paragraph 8 of the Complaint except that Defendant denies any and every

implication that various ornamental and functional zigzag stitches cannot be produced on a straight stitch sewing machine.

9. Answering Paragraph 9 of the Complaint Defendant admits that the automatic zigzag sewing machine as defined in Paragraph 7(a) of the Complaint is one of the most recent developments in the household sewing machine industry and that since the introduction of such automatic zigzag sewing machines a few years ago, their sales have been steadily increasing. Defendant denies each and every other allegation contained in Paragraph 9 of the Complaint.

10. Answering Paragraph 10 of the Complaint Defendant admits that it is the largest manufacturer of household sewing machines in the United States and is the only domestic manufacturer of automatic zigzag sewing machines and that Defendant's only competition in the sale and distribution of automatic zigzag sewing machines in the United States is presented by imports from foreign nations. Defendant is without knowledge or information sufficient to form a belief as to the truth of the remaining allegations of Paragraph 10 of the Complaint.

11. Answering Paragraph 11 of the Complaint Defendant admits that automatic zigzag sewing machines are manufactured by the Defendant in the states of New Jersey and South Carolina and are sold and distributed through its subsidiary, Singer Sewing Machine Company in interstate trade and commerce to purchasers located in all of the [fol. 2360] various states of the United States. Defendant is without knowledge or information sufficient to form a belief as to the truth of the remaining allegations of Paragraph 11 of the Complaint.

12. Answering Paragraph 12 of the Complaint Defendant admits that its annual gross revenue from retail sales of automatic zigzag sewing machines in the United States is approximately $48,000,000. Defendant is without knowledge or sufficient information to form a belief as to the truth of the remaining allegations of Paragraph 12 of the Complaint.

13. Defendant denies each and every allegation contained in Paragraph 13 of the Complaint.

14. Defendant denies each and every allegation contained in Paragraph 14 of the Complaint.

15. Defendant denies each and every allegation contained in Paragraph 15 of the Complaint.

16. Answering Paragraph 16 of the Complaint Defendant admits that it purchased and obtained by assignment from Gegauf certain patent rights and that Defendant has endeavored to enforce such patent rights together with certain other patent rights owned by Defendant against infringers of such patent rights in the United States. Defendant denies each and every other allegation contained in Paragraph 16 of the Complaint.

17. Defendant denies each and every allegation contained in Paragraph 17 of the Complaint.

Wherefore, Defendant prays:

a) That the Complaint herein be dismissed.

[fol. 2361] b) That Defendant have such other and further relief as this Court may deem just and proper under the circumstances.

Winthrop, Stimson, Putnam & Roberts, Attorneys for Defendant. By Arthur E. Pettit, A Member of Said Firm, Office and Post Office Address, 40 Wall Street, New York 5, New York.

[fol. 2361a] Acknowledgment of service (omitted in printing)

[fol. 2362] [File endorsement omitted]

IN UNITED STATES DISTRICT COURT, SOUTHERN DISTRICT OF NEW YORK

Civil Action No. 154-108

[Title omitted]

ORDER AMENDING COMPLAINT—March 28, 1960

Whereas the plaintiff having moved to amend the third sentence of paragraph 9 of the Complaint herein by inserting after the words "defendant sold," and after the

words "gross sales," the words "in the United States," and the defendant having interposed no objection, it is hereby

Ordered that the third sentence of paragraph 9 of the Complaint be and hereby is amended so as to read:

> . . . In 1958, the defendant sold in the United States, more units of automatic zigzag sewing machines than of any other single type of household sewing machine and its volume of sales thereof amounted to approximately 45 per cent of its total gross sales in the United States of all types of household sewing machines.

Dated: New York, N. Y., March 28, 1960.

Sylvester J. Ryan, Chief Judge.

[fol. 2363] [File endorsement omitted]

In United States District Court, Southern District of New York

Civil Action No. 154-108

[Title omitted]

Order Amending Answer—April 4, 1960

Whereas an Order of this Court was entered herein on March 28, 1960, amending the third sentence of paragraph 9 of the Complaint to read as follows:

> . . . In 1958, the defendant sold in the United States, more units of automatic zigzag sewing machines than of any other single type of household sewing machine and its volume of sales thereof amounted to approximately 45 per cent of its total gross sales in the United States of all types of household sewing machines.

Now, Therefore, the parties having agreed hereto, it is hereby

Ordered that paragraph 9 of the Answer in the form in

which it therein appears shall be deemed to apply to and to answer the allegations of paragraph 9 of the Complaint, as amended.

Dated: New York, N. Y., April 4, 1960.

Sylvester J. Ryan, Chief Judge.

Entry of an order in the above form is hereby consented to.

William J. Elkins, Attorney for Plaintiff. Winthrop, Stimson, Putnam & Roberts. By Arthur E. Pettit, A member of the firm, Attorneys for Defendant.

[fol. 2363a] Acknowledgment of service (omitted in printing)

[fol. 2990] IN UNITED STATES DISTRICT COURT, SOUTHERN DISTRICT OF NEW YORK

Civil Action No. 154-168

[Title omitted]

PLAINTIFF'S MEMORANDUM RE DEFENDANT'S INTERROGATORIES —March 4, 1960

I. Preliminary Statement

The purpose of this statement is to describe the proceedings to date and further, and more importantly, to acquaint the Court with the issues of this case in relation to, what plaintiff submits, is the extraneous and needless scope of defendant's interrogatories.

The Complaint, filed on December 22, 1959, alleges that in or about the year 1956 the defendant and co-conspirators, Fritz Gegauf, A.G., Bernina Nahmaschinen, a corporation of the Republic of Sweden, and Arnaldo Vigorelli, S.p.A., a corporation of the Italian Republic, have been and are engaged in an unlawful combination and conspiracy to restrain and to monopolize interstate and foreign commerce in "automatic zigzag sewing machines" in violation of Sections 1 and 2 of the Sherman Act (15 U.S.C. Sec. 1 and 2). The Complaint also alleges that the defendant has unlawfully attempted to monopolize that trade and commerce in violation of Section 2 of the Sherman Act (15 U.S.C. Sec. 2).

The "automatic zigzag sewing machines" referred to in the Complaint are defined therein as those sewing machines which automatically produce various ornamental and zigzag [fol. 2991] stitch patterns, the preselection of which can be made by the user by turning a dial or other device located on the exterior of the machine.

The Complaint specifically alleges in paragraph 14 thereof that the alleged combination and conspiracy to restrain and to monopolize consisted of a continuing agreement and

concert of action, the substantial terms of which have been and are that:

14.(a) the co-conspirator Gegauf assign its patent rights to the defendant for the purpose of enabling the defendant to prevent the importation into the United States of automatic zigzag sewing machines manufactured in Japan;

(b) the defendant use the patent rights assigned to it by Gegauf, in conjunction with its own patent rights for the purpose of excluding the importation into the United States of automatic zigzag sewing machines of foreign manufacture; and

(c) the defendant and co-conspirators determine which European manufacturers shall be permitted to export to the United States foreign manufactured automatic zigzag sewing machines.

The Complaint further alleges that in carrying out the attempt to monopolize, the defendant has:

(a) Obtained the assignment of patent rights from Gegauf for the purpose of enabling the defendant to prevent the importation into the United States of automatic zigzag sewing machines manufactured in Japan;

(b) used the patent rights assigned to it by Gegauf, in conjunction with its own patent rights, to exclude importation into the United States of automatic zigzag sewing machines of foreign manufacture; and

(c) determined, in conjunction with the co-conspirators, which European manufacturers would be permitted to export to the United States foreign manufactured automatic zigzag sewing machines.

[fols. 2992-3011] The defendant filed its Answer on January 12, 1960, admitting jurisdiction and venue and denying most of the material allegations thereof.

On February 14, 1960, the defendant propounded interrogatories and by Stipulation the time for the plaintiff to

answer or object was extended to March 4, 1960. The plaintiff has answered certain of the defendant's interrogatories and, as to the remainder, served the defendant on March 4, 1960 with its objections thereto.

II. Consideration of Defendant's Interrogatories Should Be Deferred Pending Plaintiff's Discovery

It is apparent from the above quoted charging section of the Complaint, that the issues in this proceeding are indeed, simple. The principal issue, generally stated, is whether the defendant engaged in a conspiracy under which the co-conspirator, Gegauf, would assign its patent rights to defendant so that the defendant could use such rights for the purpose of excluding imports and, further, whether the defendant attempted to effectuate such exclusion.

[fols. 3076-3101] [File endorsement omitted]

IN UNITED STATES DISTRICT COURT, SOUTHERN DISTRICT OF NEW YORK

Civil Action No. 154-108

[Title omitted]

PLAINTIFF'S ANSWERS TO DEFENDANT'S AMENDED INTERROGATORIES NOS. 5 THROUGH 9—Filed May 11, 1960

The plaintiff submits the following answers to the above designated interrogatories.

* * * * * * * *

Interrogatory No. 6

In view of certain of the language of this interrogatory, plaintiff deems it necessary to first state that the alleged conspiracy is a single continuing conspiracy, rather than several, between the defendant and co-conspirators.

* * * * * * * *

[fols. 2917-2942] IN UNITED STATES DISTRICT COURT

Civ. 154-108

UNITED STATES OF AMERICA,

v.

THE SINGER MANUFACTURING COMPANY

Transcript of pre-trial hearing—New York, November 10, 1960, 11:30 a.m.

Before: Hon. Sylvester J. Ryan, District Judge.

PRESENT: Mr. Elkins, Mr. Corcoran, Mr. Farrell, Mr. Klots, Mr. Pettit, Mr. Wesely, Mr. Williams.

* * * * * * *

[fols. 2943-2945] COLLOQUY RE FILING OF STATEMENT OF FACTS

Mr. Pettit: You better know what I have here, your Honor. I don't have here a request for admission. I have already made those. He has not responded to them in the way I think he should have responded to them. I am asking for an order based upon his failure to answer these requests for admission, that they be deemed admitted for the purpose of this litigation.

The Court: Why shouldn't that be done? Either you should admit them or tell them you deny them.

* * * * * * *

[fol. 2946] The Court:

* * * * * * *

[fol. 2947] I suggested some time ago that the government serve upon the defendant in rather informal fashion a statement of facts that you feel in fairness are undisputed and are relevant to your complaint and to the claims that you make; that then they, as the next step, go over that and admit such portions of your requests as they can and, in addition to that, where they cannot admit in the words

you have phrased it, to rephrase it in such language as they can. In that way we will get some of these facts stipulated.

In that connection, you give them a list of documents that you think are relevant to the claims you assert here and that they will concede. Let them come back with an admission or consent that they be received in evidence. After that, the defendant will give you a statement of facts that you haven't already proposed that they think are undisputed and you in turn follow the same course as I have asked them to do with reference to yours. You are familiar with this procedure. Nobody is better familiar with it than you, and you recognize its merits in these cases. [fols. 2948-2951] This has to be done. I would prefer that you do it without too much supervision by me. But to the end that there be no progress made, I am going to have a review calendar, but I will put this down for 4 o'clock on the afternoon some day in December. If Singer is violating the law, they should be enjoined. If not, they should have the benefit of their investments. It is too an important an industry today to be tied up this way.

. . . . . .

[fols. 2952-2953] The Court: On his motion to deem these facts admitted, we are going to adjourn the hearing of this motion to November 30th at 10 a.m. We are going to devote, if necessary, the whole of that day to get this thing moving. We are going to have a hearing informally, without a stenographer present, and we are going to get these facts in line. I think I have a right to ask cooperation from both of you, and ask your cooperation as reputable members of the Bar.

Prior to the 30th, Mr. Elkins, you will start the ball rolling and give him a statement of what you feel you can concede as factual.

Mr. Elkins: That is the only way to do it.

. . . . . .

[fols. 2954-2958] The Court: I think you should start off with the statement. The starting point should be from the plaintiff. You should give him the first statement. I don't want to push you too hard.

Mr. Elkins: Does this have to be the whole thing?

The Court: The aim should be to make it as full as possible and all-embracive as possible. That does not mean that you won't come in later on with other requests that may occur to you in the course of preparation. But it does mean that you should not be holding back any card to be played later on. It should be done in good faith.

. . . . . .

[fol. 2959] The Court:

. . . . . .

You give them the statement they want by the 24th of November. If that is not complete, then they are not to [fols. 2960-2963] serve their statement until after we have a hearing. But as to those matters that you request, they will give you an answer before the 30th. On the 30th, you will come in here with the balance of the statement that you think they should concede and they will come in with a statement which we will take up after we rule on yours, on what they think you should concede, and we will make rulings and concessions right here on the record at that time.

. . . . . .

[fol. 3267] [File endorsement omitted]

IN UNITED STATES DISTRICT COURT, SOUTHERN DISTRICT OF NEW YORK

[Title omitted]

Civil Action No. 154-108

ORDER REQUIRING PARTIES TO PREPARE LIST OF EXHIBITS TO BE OFFERED IN EVIDENCE AND TO FILE STATEMENT OF CONTENTIONS—February 17, 1961.

The plaintiff having moved before me on February 11, 1960 for an order assigning this case to a Judge of this Court for all purposes, including the hearing of all motions and other applications preliminary to trial of this cause, the conducting of all pre-trial procedures, and the presiding at the trial of this cause; and for such other and further relief as to this Court may seem just and proper; and such motion having been granted to the extent that all motions shall be made returnable before me; and pre-trial hearings having been held on February 29, March 21 and 28, September 13, November 10, 18, 23 and 30 and December 28, 1960, January 3, 4, 12, 23 and 26, February 3 and 16, 1961: and the parties having exchanged numerous proposals for agreement; and due deliberation having been had; it is

Ordered that a list of exhibits which may be offered in evidence at the trial be prepared, and to that end, within ten days from the date hereof, plaintiff, following service of a copy of this list on defendant, shall file with the Court a designation of the documents which may be so offered by [fol. 3268] plaintiff, and that within twenty days from the date hereof, defendant, after service of a copy on plaintiff, shall file with the Court a listing and designation of the documents which may be so offered by defendant; and it is further

Ordered that twenty days from the date hereof, plaintiff, after service of a copy on defendant, shall file with the Court a statement of plaintiff's contentions in support of its claim in the above-captioned action; and it is further

Ordered that thirty days from the date hereof, defendant,

after service of a copy on plaintiff, shall file with the Court a statement of defendant's contentions in support of its defense in the above-captioned action; and it is further

Ordered that the trial of the above-captioned action shall commence before me on April 4th, 1961 at 10 a.m. in Room 129.

Dated: New York, New York, February 17th, 1961.

/s/ Sylvester J. Ryan, Chief Judge.

[fols. 2364-2368] IN UNITED STATES DISTRICT COURT,
SOUTHERN DISTRICT OF NEW YORK

Civil Action No. 154-108

UNITED STATES OF AMERICA, Plaintiff,

against

THE SINGER MANUFACTURING COMPANY, Defendant.

STIPULATION—February 23, 1961

It Is Stipulated and Agreed that, for the purpose of this action, any new trial or re-trial of this action or any trial of an action between the above-captioned parties arising out of the conduct, transaction, occurrence or series of transactions or occurrences complained of in this action, and for no other purpose, the matters set forth in the Statement of Facts, annexed hereto and made a part hereof, shall be deemed to be true, reserving to each party the right to object to the introduction into evidence of any part thereof on the grounds of relevancy or materiality and the right to introduce further evidence, not inconsistent therewith, at the trial.

Dated: New York, New York, February 23, 1961.

/s/ William J. Elkins, Attorney for Plaintiff. s/ Winthrop, Stimson, Putnam & Roberts, Attorneys for Defendant. /s/ by Arthur E. Pettit, s/ Partner.

So Ordered: March 20, 1961.

/s/ Sylvester J. Ryan, Chief Judge.

[fol. 2369] IN UNITED STATES DISTRICT COURT, SOUTHERN DISTRICT OF NEW YORK

Civil Action No. 154-108

[Title omitted]

STATEMENT OF FACTS—FEBRUARY 23, 1961

1. The Singer Manufacturing Company, the defendant herein, is a corporation organized and existing under the laws of the State of New Jersey, having its principal place of business in the County of New York of the State of New York, the same being within the Southern District of New York.

2. Said defendant is and during the entire period covered by the subject complaint has been engaged in the manufacture of sewing machines, including zigzag sewing machines, both in the United States and abroad.

3. Fritz Gegauf, A. G., Bernina Nahmaschinen Fabrik (hereinafter referred to as "Gegauf") is a corporation organized and existing under the laws of the Republic of Switzerland and having a principal place of business in Steckborn, Switzerland, and is, and during the entire period covered by the subject complaint has been engaged, among other things, in manufacturing sewing machines, includ-
[fol. 2370] ing zigzag sewing machines, in Switzerland and exporting such machines to various countries of the world including the United States.

4. Arnaldo Vigorelli, S.p.a. (hereinafter referred to as "Vigorelli") is a corporation organized and existing under the laws of the Italian Republic, having a principal place of business in Pavia, Italy, and is, and during the entire period covered by the subject complaint has been engaged, among other things, in the business of manufacturing sewing machines, including zigzag sewing machines, in Italy and exporting such machines to various countries of the world including the United States.

5. Household sewing machines are designed and sold for use principally by housewives for personal sewing needs.

6. The straight stitch type of household sewing machine comprises three basic devices, namely, a thread-carrying

needle which reciprocates in a vertical direction but does not move transverse to the direction of the work feed, a loop-taker which, cooperating with the needle, forms a straight line of stitches, and a mechanism which feeds the work to be stitched between such needle and loop-taker. These three devices are driven in synchronism by an electric motor or by an operator using a treadle, hand-crank, or similar mechanism. The speed of the machine, the length of the stitches and the direction of the feed may be varied by the operator.

7. The zigzag stitch machine has all of the features and functions of a straight stitch machine and may be operated as a straight stitch machine. In addition, the needle may be [fol. 2371] shifted back and forth laterally of the normal direction of the work feed, from zero to maximum, within the field of lateral throw of the needle, from a fixed neutral position of nonvibration in the center of such field of throw, so as to produce stitches that follow a zigzag path. The size and shape of the pattern of the zigzag stitch may be altered by varying the amplitude of the lateral needle movements and the amplitude and/or direction of the work-feeding movements. Mechanism may be provided for fixing a neutral position of nonvibration of the needle at either the center or at either side of the field of the lateral throw of the needle and for controlling the lateral throw of the needle within such field, from zero to maximum, either across a center line through such field or from either side of such field. Mechanism may also be provided, whereby the needle can be laterally vibrated through predetermined patterns of movement modifying the zigzag stitch path, with the result that stitches may be made having various ornamental shapes other than plain zigzag.

8. There are three general types of household zigzag sewing machines:

Manually Operated Zigzag Machine

(a) A household sewing machine which, in addition to straight stitches, produces continuous plain zigzag stitches and, by manual manipulation, during the operation of the machine, of a handle or lever located on the exterior of the machine, various ornamental and functional zigzag stitch

[fol. 2372] patterns, hereinafter referred to as a manually operated zigzag machine.

Replaceable Cam Zigzag Machine

(b) A household sewing machine which, in addition to straight stitches, produces without any artistry on the part of the operator, various ornamental and functional zigzag stitch patterns, the preselection of which must be made by the user through the manual removal from the machine of one or more cams and the manual replacement of such cam or cams by one or more substitute cams having cam configurations different from the replaced cams, hereinafter referred to as a replaceable cam zigzag machine.

Machine-Carried Multiple Cam Zigzag Machine

(c) A household sewing machine which, in addition to straight stitches, produces without any artistry on the part of the operator, various ornamental and functional zigzag stitch patterns, the preselection of which must be made by the user through a device such as a dial, handle or knob, located on the exterior of the machine, which effects a relative shifting of cam tracking means and a group of machine-carried cams, each having cam configurations different from the other cams, hereinafter referred to as a machine-carried multiple-cam zigzag machine.

9. The defendant presently manufactures household straight stitch and replaceable cam (Par. 8(b)) and machine-carried multiple-cam (Par. 8(c)) zigzag stitch sewing machines in the States of New Jersey and South Carolina and distributes them in the various States of the United [fol. 2373] States through a wholly-owned subsidiary, Singer Sewing Machine Company, which operates some 1600 retail stores throughout the United States. The principal portion of defendant's sales in the United States are through such retail stores. In addition, leased outlets are operated by Singer Sewing Machine Company in approximately 80 department stores located in various States of the United States. It also sells at wholesale to approximately 270 independent retail stores. Defendant also sells household sewing machines, including all three types of

zigzag machines, in various foreign countries of the world, outside the Iron Curtain, through its own and independent distributors, who operate thousands of retail stores in such countries. Defendant owns and operates plants manufacturing various types of machines in some 14 foreign countries.

10. Directly after World War II household straight stitch sewing machines were manufactured in the United States by White Sewing Machine Corporation, Free Sewing Machine Company, Inc., The Bell Manufacturing Corporation, Burtman Electric Company, Gelman Manufacturing Company, Inc., and The New Process Gear Company as well as defendant. By 1959 with the exception of The New Process Gear Company, which manufactures only straight stitch sewing machines on specifications and orders from a single domestic customer, defendant was and now is the sole manufacturer of household sewing machines in the United States.

11. In the year 1948 importations of household sewing machines from Japan amounted to 3,000 machines. In the year 1959 importations of household sewing machines from [fol. 2374] Japan amounted to 1,100,000 machines.

12. The only sale and distribution in the United States of sewing machines, including zigzag machines, other than those of defendant and New Process Gear Company, are of machines imported into the United States.

13. Users of industrial sewing machines, both in the United States and abroad, employed zigzag sewing machines from prior to 1900. The known art at that time is illustrated by Leilich U.S. Patent No. 386,252, July 17, 1888 which disclosed an ornamental zigzag stitch sewing machine. This machine had two replaceable cams, one of which imparted lateral zigzag movement to the needle while the other controlled the amplitude of the work-feeding movement. Such cams could be replaced by other cams giving the operator a choice of ornamental stitches.

14. The first zigzag stitch sewing machine manufactured especially for use in the home presently known to the parties was the Class 206 machine (manually operated—Par. 8(a)). It is stipulated that if called to testify employees of the defendant Singer would state under oath that this machine was manufactured by Singer in its German plant

from approximately 1934 to the opening of World War II, after which, commencing in 1949, similar machines were manufactured in the Singer factory in Scotland, importation and sale of which in the United States commenced in 1951; and further that this machine is illustrated in the United States Singer-owned Tiesler Patent No. 2,014,916, September 17, 1935; and further that this machine pri- [fol. 2375] marily differs from the above Leilich unit in that it is provided with a built-in rotating cam, rather than the replaceable cam, which imparts a fixed lateral throw to the needle at all times; and further that mechanism is provided so that by manual manipulation during the stitching cycle the throw of the cam can be modified and the amplitude of the zigzag stitch varied. From 1934 to 1951 this machine was offered to the home user by Singer outside the United States.

15. In 1948 shipments of an Italian-made Necchi zigzag stitch machine (manually operated—Par. 8(a)) were first made to the United States and by 1951 sales of such machines commercially demonstrated that a definite market in a household type zigzag sewing machine existed in the United States. Like the Singer machine, the Necchi machine's single needle-vibrating cam could not be replaced, but by manual manipulation the throw of the cam could be modified and the amplitude of the zigzag stitch varied.

16. In 1952 the Elna zigzag machine (replaceable cam —Par. 8(b)) was introduced in the United States. Such machine is disclosed in United States patent of Casas Robert et al., No. 2,682,845, July 6, 1954. The Elna machine, as the Leilich machine, had two rotary cams and two cam followers; one cam imparted lateral movements to the needle; the other altered the feeding movements in synchronism with the needle producing various ornamental stitch patterns. The two cams of the Elna machine were replaceable by other cams so that various stitch patterns [fol. 2376] could be produced. Unlike those of the Leilich machine, the Elna cams were positioned within the machine and accessible through a hatch.

17. Ralph E. Johnson, a member of Singer's Experimental Department in Elizabethport, New Jersey, commenced work on the development of a household zigzag machine and completed a design of a new machine on April 29, 1953. This design is embodied in the Singer Class 401

machine. The Class 401 machine (machine-carried multiple cam—Par. 8(c)) incorporates a stack of rotary cams and a pair of cam followers, movable lengthwise of the axis of the cam stack, either of which can track any one cam or in combination can track any two cams, whereby information from such cam or cams can be utilized to control the lateral movements of the needle. The Class 401 machine is disclosed in Johnson U. S. Patent No. 2,862,468 issued December 2, 1958, which was filed November 29, 1954. It is stipulated that if called to testify, employees of the defendant Singer would state under oath that the design of the Class 401 machine required the manufacture of a new sewing machine which in turn required four years of defendant Singer to develop and produce the necessary manufacturing and assembly tools to permit manufacture of the machine in an efficient and economical manner. The Class 401 machine was placed on the market in June 1957.

18. On March 9, 1953 Martin R. Perla and Edward Koenig, members of Singer's Experimental Department in Bridgeport, Connecticut, were directed to design and develop an improved Class 206 machine, which was to in- [fol. 2377] corporate a replaceable cam. The design of this machine was completed by March 25, 1953 and is embodied in the Singer Class 306 machine (replaceable cam —Par. 8(b)). This design eliminated the cam of the Class 206 machine and superimposed on such machine a zigzag mechanism having a rotary removable cam, otherwise leaving the Class 206 machine substantially in its then existing form. Manufacture and sale of this Class 306 machine was started in the United States and abroad in 1954 and a substantial number of said machines were sold in the United States until 1956 when manufacture, but not sale, thereof in the United States was stopped and manufacture of a new Class 319 machine was commenced both abroad and in the United States. The Class 306 machine continues to be manufactured and sold abroad. The Class 306 machine is disclosed in Singer-owned United States Patent No. 2,756,703, July 31, 1956.

19. If called to testify an employee of Singer would state under oath that on April 1, 1954, Martin R. Perla was directed to design and develop an improved Class 306 machine, which incorporated a multiple cam arrangement in lieu of the replaceable cam of the Class 306 machine and

that Mr. Perla completed this design by May 10, 1954. This design was incorporated in the Singer Class 319 machine. The Class 319 machine (machine-carried multiple cam—Par. 8(c)) incorporates a plurality of cams, each with its own follower. The cam followers may be used singly or in combination to track one or more selected cams, whereby the information from such cam or cams is utilized to control the lateral movements of the needle. The Class 319 [fol. 2378] machine is disclosed in Patent No. 2,810,360, which was filed December 8, 1954. The sale of the Class 319 machine was commenced in 1956, both in the United States and abroad. Manufacture of the Class 319 machine was discontinued in the United States in 1957 when it was superseded by the Class 401 machine. The Class 319 machine continues to be manufactured and sold abroad. The 319 machine being of substantially similar construction to that of the 306 machine, except in so far as their rotary cam mechanisms differed, tools for its production and assembly could be prepared in a short period with little expense. If called to testify, an employee of Singer would testify under oath that production of the 319 machine was ordered commenced in order to place such a machine on the market as soon as possible. Such production commenced on November 18, 1955.

20. During the development period of the Class 306, 319 and 401 machines, respectively, Singer commenced investigations to determine if Singer were free, from a patent standpoint, to manufacture and market such machines in the various countries of the world. This investigation was continued from time to time during the tooling period of these three machines. Patent applications covering the designs for such machines were prepared and filed in various countries of the world, including the United States. Such patent applications in the United States matured into the patents referred to in paragraphs 17 through 19. The foreign applications corresponded to the aforesaid United States applications. These investigations developed no United States patents during the year 1953 or 1954 containing claims which in defendant's opinion would interfere with the proposed Class 306, 319 or 401 machines. [fol. 2379] 21. In September, 1953 the Italian firm of Vigorelli introduced in the United States a multi-cam zigzag stitch sewing machine (Par. 8(c)). The Vigorelli machine

incorporated a unitary stack of removable rotary cams, a single cam follower, movable lengthwise of the axis of the cam stack, for tracking any one of such cams, and means for transmitting the motion of the follower to the needle. This, in the opinion of Singer, involved, among others, two ideas, one of which was incorporated in the Singer 306 design and one of which was incorporated in the Singer 319 and 401 designs. The first idea comprised the idea of utilizing, in combination, a replaceable cam, a cam follower and a means to transmit the motion of such cam follower to the needle bar for the purpose of controlling the lateral needle vibration, in accordance with the shape of the cam, which motion transmitting means included a manually operable mechanism for adjusting and varying the amplitude of such lateral needle vibrations and for determining the neutral position of non-vibration of the needle. This idea was incorporated in the Singer 306 design. The second idea comprised the idea of utilizing, in combination, a plurality of cams, cam following means and means to transmit the motion of the cam following means to the needle bar for the purpose of controlling the lateral needle vibration in accordance with the shape of any cam, which motion transmitting means included a manually operable mechanism for engaging the cam following means with any one of the cams. This idea was incorporated in the Singer 319 and 401 designs.

[f. 1.2380] 22. The first Japanese-made multi-cam zigzag stitch machine (Par. 8(c)) introduced in the United States was that of Brother International Corporation which arrived in the United States in September 1954. This machine, as the Singer 401 and the Vigorelli machine, incorporated a plurality of rotary cams and a single cam follower which could be engaged with any one of the cams for laterally vibrating the needle through a predetermined pattern of movement.

23. In April 1955 Singer first learned that Vigorelli had introduced into the United States a modified form of its multi-cam machine (Par. 8(c)). Such modified form differed from the first machine in that in the modified form the single cam follower was adapted not only to engage any one of the cams but in addition to engage any two adjacently disposed cams, which provided an additional variety of ornamental stitches. The second Vigorelli ma-

chine is disclosed in British Vigorelli Patent No. 736,277. With respect to this second Vigorelli machine, Singer's Patent Department wrote to Max L. Waterman, Vice President of Singer and head of its research and development department, a letter dated April 26, 1955, which is Exhibit S-1.

24. In October, 1953 Singer obtained the Vigorelli multicam zigzag stitch machine, which it subsequently concluded had first been imported and sold in the United States during September, and sent the machine to Singer's Elizabethport Experimental Department for examination. At that time [fol. 2381] Singer had completed the designs for its Class 306 and 401 machines, and these machines were in the process of being developed.

25. Because of the sale of the Vigorelli machine in the United States in September, 1953, Singer in October, 1953 concluded that it must assume that Vigorelli had invented the zigzag stitch mechanism contained therein prior to the time of the invention by Singer of the zigzag stitch mechanism to be incorporated in the 306 machine and that it should be presumed that Vigorelli had on file in various patent offices of the world, including that of the United States, patent applications containing claims which would be infringed by the Singer designs. Singer's apprehension at that time was directed primarily to the Class 306 machine for which tooling had commenced for large scale production and was far enough along that manufacture thereof commenced in 1954. On October 28, 1953, after examination of the Vigorelli machine, Singer's Patent Department concluded that so far as any claim might be asserted against the 306 machine based on the Vigorelli machine, Singer probably could prevail over it and that proceeding with the 306 was a normal business risk and recommended that the Company continue its plans to produce and market the 306 machine.

26. Singer thereafter continuously sought information as to the existence of Vigorelli or other patents relating to the cam mechanism contained in the Vigorelli machine, to determine whether such patents would interfere with the manufacture and sale of the Singer machines any place [fol. 2382] in the world, including the United States. By April 22, 1955 Singer had procured copies of two Italian Vigorelli patents and by May 2, 1955 Singer had concluded

that Vigorelli would dominate both the 319 and 401 machines in many European countries and Brazil, and that it had no assurance that others might not do the same in the United States even if Vigorelli did not. It further concluded that with knowledge it expected to obtain through anticipated interference proceedings in the U. S. Patent Office between Singer patent applications relating to the Class 401 and 319 machines and the patent applications of its competitors, including Vigorelli, and Vigorelli's lack of knowledge of Singer's developments, Singer should negotiate directly with Vigorelli as to cross-licensing possibilities, and with others with whom there might be interferences while they were unaware of Singer claims.

27. Singer continued its search for Vigorelli patents. In its search, which search has been instituted in an attempt to destroy or to limit the scope of the Italian Vigorelli patents Nos. 497,557 and 507,862, filed, respectively, in Italy on January 28, 1953 and September 29, 1953, Singer found a United States Patent, No. 2,693,778, which had been issued on November 9, 1954 to Carl Harris. This patent disclosed a sewing machine having a plurality of cams and a single cam follower which could engage any one of the cams to produce ornamental stitches. If this patent were acquired it could be reissued with claims of the type incorporated in the Singer 401, Singer 319, the Vigorelli and the Brother machines, covering a multi-cam zigzag stitch mechanism [fol. 2383] disclosed, but not claimed in such patent. Singer believed that such patent would dominate all such machines because that patent had been filed in the United States on June 9, 1952 prior to any use or patent priority date then known to Singer. Singer hoped to be able to acquire, through the above noted United States re-issue patent application, claims that would be infringed in the United States by the Vigorelli multi-cam structure or, in the alternative, to be thrown into interference with any Vigorelli United States application so that Singer would be placed in a better bargaining position with Vigorelli.

28. Singer purchased the Harris patent on June 10, 1955. On June 16, 1955 it filed a reissue application setting forth (1) the four original claims contained in the Harris patent (Harris Reissue Claims 1 through 4) and (2) eight proposed reissue claims (numbered Application Claims 5 through 12). The four original claims were allowed. The

eight proposed reissue claims were rejected by the Patent Office, which resulted, by amendments, in a series of substitutions and rejections of claims until, on May 16, 1956, Singer substituted Claim 22, a limited version of the original Application Claims 5, 7 and 8 taken in combination. On August 22, 1956 such Claim 22 was placed in interference with the U. S. Gegauf patent application Serial No. 358,377 and subsequently was allowed by the Patent Office as Claim 1 in Gegauf patent No. 2,832,302 issued April 29, 1958. All other substituted claims placed in the reissue application were rejected except that Claims 23, 24 and 25, respectively, were allowed in Harris Reissue Patent No. Re. 24,370 as Reissue Claims 5, 6 and 7.

[fol. 2384] 29. Claim 22 taken from the Harris reissue application, and allowed as Claim 1 in the Gegauf patent, included, *inter alia*, the idea of a series of rotatable cams having a common axis and a single cam follower, shiftable relative to each other lengthwise of the common cam axis, in order to select a particular cam. The Harris Reissue Claims 5, 6 and 7, above referred to, claimed, *inter alia*, specific embodiments of the aforesaid idea, as follows:

(a) Harris Reissue Claim 5 included the limitation, *inter alia*, of a series of rotatable cams having a common axis with each cam being shiftable, lengthwise of the common cam axis, with respect to the cam follower in order to select a particular cam.

(b) Harris Reissue Claim 6 included the limitation, *inter alia*, of a series of rotatable cams having a common axis and a cam follower shiftable relative to each other, lengthwise of the common cam axis, in order to select a particular cam, used in combination with a constantly rotatable cam.

(c) Harris Reissue Claim 7 included the limitation, *inter alia*, of a series of rotatable cams having a common axis and a cam follower shiftable relative to each other, lengthwise of the common cam axis, in order to select a particular cam, used in combination with a particular type of cam follower retracting means.

30. In connection with the acquisition of United States Harris patent, Singer acquired corresponding Harris patents or patent applications in Great Britain, Germany, Canada, France, Japan, Italy, Sweden and Belgium. Singer

[fol. 2385] thereafter sought to determine whether the Harris foreign applications could be amended to insert claims similar to those inserted in the United States reissue application.

31. After acquisition of the Harris patents Singer continued its search for Vigorelli and other patents in foreign countries and sought to determine the scope of patents found.

32. By August 16, 1955 Singer concluded that it was probable that it and Vigorelli would become involved in litigation unless some basis of an agreement could be found which would enable Singer to be free from claims by Vigorelli and which would accord similar immunity to Vigorelli with respect to claims based on Singer patent rights, and that negotiations should be initiated immediately. A letter was written to the head of the Singer organization in Italy stating such to be the fact and asking advice as to the best manner in which to approach the Vigorelli men. After receiving advice from Italy and further correspondence thereon, a conference with Vigorelli was arranged. In the meantime and right up to the date of the conference, Singer continued its search for patents. Such conference was held on November 16 and 17, 1955.

33. In entering into negotiations at this conference Singer had every reason to believe that:

(1) In each of the various countries, including the United States, where both a Harris patent application and a Vigorelli patent application corresponding to either or both of the Vigorelli Italian patents had been filed, the Harris patent application would have a priority date earlier than that of any such Vigorelli [fol. 2386] application; and, if amendments to the Harris application could properly be made, the Harris patent would dominate and if amendments could not properly be made the Vigorelli patent would dominate;

(2) In each of the various countries in which a Vigorelli patent application had been filed and a Harris patent application had not been filed, the Vigorelli patent would dominate;

(3) In each of the various countries in which a Harris patent application had been filed and a Vigorelli patent application had not been filed and in which amendments to the Harris application could properly be made, the Harris patent would dominate;

(4) In the United States the Johnson patent application, covering the idea of taking information from two cams at the same time, had a priority date earlier than the second Italian Vigorelli patent covering the same idea, and that it would appear that the Johnson patent would dominate in the United States;

(5) As between Singer and Vigorelli, the Singer 319 and 401 multi-cam machines would be dominated by Vigorelli patents in various foreign countries and the Vigorelli multi-cam machines would be dominated by Singer patents in the United States and in certain foreign countries,

and Singer knew that:

(6) Vigorelli had been advised by Singer that Singer had on file in the United States and in certain foreign countries patent applications relating to multi-cam zigzag machines and that litigation between Vigorelli and Singer relative thereto was probable, if an agree-[fol. 2387] ment between them was not reached; and Singer had every reason to believe that Vigorelli did not know the character or status of claims inserted in such Singer patent applications.

34. The agreement between Singer and Vigorelli, which is Exhibit S-2, was signed on November 17, 1955.

35. On October 10, 1955, Singer was advised by its Italian representative that Vigorelli was conducting negotiations with Gegauf concerning the latter's prior patent covering a plurality of cams and on October 14 received a confirming letter stating that Gegauf had deposited a patent for a device involving a plurality of cams in a small number of countries some considerable time before the Gegauf machine appeared on the market. This was the first information received by Singer concerning any possible Gegauf patent. Singer had been maintaining a care-

ful watch over Patent Offices throughout the world and it thought that the patent referred to in the cable was probably a Brutsch patent. On October 20, 1955, Singer's representative in Italy cabled that Gegauf had obtained an Italian patent and had a Swiss application with a filing date of May 31, 1952, and that Gegauf was said to have obtained patents in Germany and the United States.

36. Near the end of October 1955 Singer obtained a copy of Gegauf Italian Patent No. 501,172 which related to a multiple-cam machine. This patent disclosed (1) an embodiment of a zigzag stitch machine having a stack of cams and a single cam follower which by sliding lengthwise of the axis of the cams could engage any one of such cams, [fol. 2388] and (2) an embodiment of a zigzag stitch machine having a stack of cams with each cam having its own individual follower. This Italian patent enjoyed an effective priority date in Italy of May 31, 1952 based on a Swiss application priority date of May 31, 1952. Thus it appeared to Singer that patents in many of the principal countries of the world might be allowable to Gegauf which would be infringed by the Singer Class 319 and 401 machines. Singer continued its search for patents affecting multi-cam machines, including any possible other Gegauf patent or patent application. In January 1956, Singer learned, by examination of the United States Patent Office assignment records, that Gegauf had pending in the United States Patent Office an application bearing Serial No. 358,377 which had been executed in Switzerland on May 20, 1953. Singer therefore believed that it was very likely that such United States Gegauf application corresponded to the above noted Swiss application, and that it enjoyed a priority date of May 31, 1952, nine days earlier than the priority date of the Harris patent. It was subsequently determined that such Gegauf United States application had been filed May 29, 1953, and that it did correspond to such Swiss application and had its priority date.

37. Prior to January 19, 1956, the U. S. Patent Office had unofficially advised Singer that the claims in its U. S. Harris reissue patent application, which claims would read on both the Singer and the Gegauf machines, were allowable over the known issued patents. On January 19 Sing-

er's Patent Department pointed out to Singer officials that such being the fact it followed that if such claims [fol. 2389] were contained in a Gegauf U. S. patent application they would be allowable and that with a priority date nine days prior to the filing date of the Harris reissue application it would appear that Gegauf might be entitled to the broad claims. It further advised that it was reasonable to presume that the Gegauf application corresponded to the parent Swiss case, that the U. S. Patent Office would declare an interference for the purpose of determining which of the two parties was entitled to the broad claims. It further pointed out that in such event the Harris reissue application was nevertheless of value to Singer as a means for opposing the final allowance to Gegauf of broad U. S. claims covering multiple-cam mechanism. It accordingly strongly recommended that Singer attempt to work out with Gegauf an agreement along the lines of the Vigorelli-Singer agreement and pointed out that chances of negotiating such an agreement would be greatly enhanced if Singer could approach Gegauf before any patent interference was declared, as prior to any such interference, while Gegauf would have no knowledge as to the effective filing date of the Harris application, Singer would be in a better bargaining position with Gegauf.

38. In December, 1955, Singer heard that Gegauf and Vigorelli had entered into a cross-license agreement, which related to multi-cam patents and which was similar to the Singer-Vigorelli agreement. On February 6, 1956 Singer advised its Italian representative that Singer was very much interested to learn of the Gegauf-Vigorelli agreement as there was every likelihood that Singer would be meeting with Gegauf before long and discuss similar arrangements. [fol. 2390] It asked that an excuse be used for an informal approach to Vigorelli in order to obtain from him information concerning particulars of the Gegauf-Vigorelli agreement, including information as to why Gegauf had dropped its demand for $160,000 for entering into an agreement with Vigorelli, the details of particular patents that Vigorelli had come across which caused Gegauf to drop its demand for such large amount and the names of Gegauf officials with whom Vigorelli had negotiated. Two weeks after asking for this information, Singer explained to its Italian

representative that the idea of a Singer-Gegauf conference in Switzerland was predicated on Singer's arriving at a logical and plausible reason sufficiently interesting to Gegauf to visit him and its ability to establish contacts with the proper persons and further explained that information on the Vigorelli-Gegauf negotiations would enable Singer to determine whether their proposition would be sufficiently interesting to Gegauf.

39. A Singer representative in Italy visited Vigorelli and obtained the requested information. His report, forwarded to Singer on March 2, 1956, stated that Vigorelli had asserted that Gegauf's change from a demand for 100,000,000 lire to consenting to an agreement not contemplating payments of any kind was due to a variety of reasons which could be summarized as: Gegauf's Italian patent was poorly drawn; Gegauf had applied for patent protection in only four countries, whereas Vigorelli had applications or patents in seventeen countries; Vigorelli was aware of certain patents which Gegauf considered dangerous to his various applications. Shortly after receiving this information, Singer instructed its office in Switzerland to make [fol. 2391] arrangements for a conference with Gegauf. Arrangements were made for a conference to begin on April 12, 1956 in Steckborn, Switzerland.

40. In entering into negotiations at this conference Singer knew that:

(1) Gegauf had a patent issued in Switzerland with a priority date nine days before that of the Harris patent, the principal claim of which read directly on the Singer 401 machine;

(2) Gegauf had filed a U. S. application, claims of which Singer presumed would read on the 319 and 401 machines;

(3) Gegauf had an application pending in Germany, which might mature into a patent which would read upon the 319 and 401 machines, and had an Italian patent the validity of which was in question due to the manner in which it was written;

(4) Gegauf was reported to have serious worries as to whether certain prior patents, if called to the atten-

tion of Patent Offices, would limit or invalidate his claim;

(5) Singer had the Harris reissue application in the United States which read on the Gegauf machine and the various Harris patent applications on file in foreign countries, claims of which, if they could be properly amended, would read on the Gegauf machine.

41. The agreement between Singer and Gegauf, which is Exhibit S-3, was signed on April 14, 1956.

42. On or shortly prior to July 15, 1955, Singer received a leaflet issued by Messerschmitt A. G., a corporation of [fol. 2392] the Federal Republic of Germany, which was and is engaged in the manufacture and sale of sewing machines, including zigzag sewing machines, describing a Messerschmitt multicam machine (Par 8(c)). This machine, as the Singer 319 machine, is characterized by having a plurality of cams each provided with its own follower. The Messerschmitt machine is disclosed in Messerschmitt Belgian Patent No. 543,073.

43. Singer had filed its Perla patent application in the United States covering its 319 machine on December 8, 1954, and at the time of the receipt of the Messerschmitt leaflet was tooling and otherwise preparing to manufacture the 319 machine, both in the United States and in Clydebank, Scotland, for distribution throughout the world. On July 19, 1955 Joel Stanford, head of Singer's patent department, wrote to Max Waterman, Vice President of Singer and head of its research and development department, that the patent department assumed that Messerschmitt probably had filed its patent application in Germany covering its machine prior to the end of 1954.

44. Defendant asserts and the Government does not deny that prior to December 8, 1955, Singer had filed in twenty foreign countries applications corresponding to its Perla U. S. application. In the meantime, and continuing thereafter, Singer searched the United States patent assignment records, the British patent application records, and the Italian patent records, and kept a lookout for possible issue or publication in all foreign countries. On February 24, 1956, Singer received advice that no assignment of a Messer-

schmitt United States patent application for a multiple [fol. 2393] cam zigzag machine had been recorded. Up to March 15, 1956, Singer had found no indication of a Messerschmitt patent or patent application.

45. On March 15, 1956, Singer advised its German representative that it was most important for Singer to have the earliest information possible concerning the filing date of a patent application of Messerschmitt for their multicam machine. Singer suggested that some information might be picked up from the patent office in Belgium and requested such German representative to obtain any and all information possible concerning the possible filing by Messerschmitt of patent applications directed to sewing machines having multiple cams, any one of which might be selected to control the vibration of the needle-bar. Singer advised that this had been made more important by a recent communication from the German patent examiner in which he stated that action on Singer's German Perla application S. 46,580 (319 machine) was being held in abeyance because of a prior filed German application which he had before him.

46. On March 19, 1956, Singer requested its German representative to arrange a conference with someone of the responsible management of the Messerschmitt company to discuss measures that Singer and Messerschmitt might take to avoid conflicts between patent applications owned by them relative to multiple cam zigzag machines. On March 27, 1956, Singer's German representative notified Singer that arrangements had been made for a conference on May 3, 1956 with Messerschmitt.

[fol. 2394] 47. In the last week of April, 1956, a few days before the date of the conference with Messerschmitt, Singer discovered a Messerschmitt Belgian patent which had a priority date of November 25, 1954, fourteen days earlier than the filing date of the Perla United States application, but subsequent to the Perla invention date. This indicated to Singer that while if its patent issued in the United States its claims if allowed in their then existing state would dominate the 319 type machine, Messerschmitt patents might issue in many of the principal foreign countries with claims which would dominate the 319 type machine.

48. Singer and Messerschmitt representatives met on May 2, 1956. Messerschmitt refused to enter into any agreement, stating that it wanted a 319 machine to study before making any final decision.

49. By May 1956, Singer was tooling and otherwise preparing to manufacture the 319 machine in Italy for distribution there and elsewhere.

50. On May 25, 1956 a Messerschmitt representative examined a Singer 319 machine. After such examination Messerschmitt advised that it had ascertained that the 319 machine agreed identically in its essential principles with the Messerschmitt machine, on which it had filed patent applications some considerable time before; that an amicable settlement would be in the interest both of the Singer and the Messerschmitt companies because quite a number of other competitors would profit by a dispute which would partly destroy or narrow the claims of either the Singer or the Messerschmitt patents; that patent law questions connected with such ascertainment should be discussed [fol. 2395] between Singer and Messerschmitt patent counsel with the aim of arriving at an amicable settlement; that such counsel should prepare a proposed agreement; and that, patent applications having been filed by Messerschmitt not only in Germany and the United States but also in a number of foreign countries, an agreement, if made, should be a global arrangement.

51. On June 27, 1956, Singer advised its agent in Germany that it agreed that an amicable settlement should be reached, as only competitors would profit from extended and costly litigation between Singer and Messerschmitt; that Messerschmitt's repeated statement that it had patent applications filed in a number of countries left Singer with the impression that Messerschmitt felt that its position was favorable and that no doubt such attitude was fostered by the fact that in May Singer approached Messerschmitt; that Singer believed that within a week or two a conflict between the United States patent applications of Singer and Messerschmitt would develop and that it would be to Singer's advantage if it developed before further talks with Messerschmitt. Singer further advised that no urgency should be displayed in the matter since Singer believed that upon learning from the Patent Office of such

a conflict, Messerschmitt would be stimulated into making further inquiries.

52. On or about July 10, 1956 Singer learned from the United States Patent Office that its Perla application interfered with another patent application and it had no doubt that such interference was with Messerschmitt's application. Singer thereupon advised its agent in Germany that [fol. 2396] it now had good reason to believe that Messerschmitt had received or would receive word that its U. S. patent application would be placed in interference and would understand that such interference was with Singer. Singer requested that Messerschmitt not be advised of such pending interference but that it be told that Singer saw no reason why an amicable settlement could not be reached. Singer added that, although it did not wish to display to Messerschmitt a sense of urgency, Messerschmitt should be asked to suggest a definite date for a meeting and that Singer hoped that Messerschmitt upon learning of the interference would be stimulated into making further inquiries.

53. As a result of such instructions from Singer a conference was arranged but was delayed from time to time until September 24, 1956, such delays being due in part to the desire of Singer to make sure that Messerschmitt was aware of the interference. In the meantime, on September 17, 1956 the United States Patent Office declared an interference between the Perla and the Messerschmitt applications, which interference involved a mechanism by which information is taken from each of a plurality of cams by its own follower.

54. Singer and Messerschmitt's representatives met in Frankfurt on September 24, 1956 and an agreement was reached that patent questions would be settled by cross-licensing. Before signing, however, Messerschmitt wanted to obtain certain releases from its distributor and exclusive licensee in the United States.

[fol. 2397] 55. In November 1956 Singer received word that such release had been signed and that the Messerschmitt agreement would be signed in New York later that month. It subsequently was advised that Messerschmitt would not sign the agreement until it had been assured that Singer entered into some kind of an arrangement

under which Messerschmitt manufactured some sewing machines for Singer.

56. On December 11, 1956 the Singer Patent Department reported to Singer on the infringement status throughout the principal countries of the world of the Singer 319 machine. The Patent Department advised that:

> (1) The 319 machine infringed recently issued Belgian and Italian patents owned by Messerschmitt, and since Messerschmitt had corresponding applications in Germany and Great Britain, the Patent Department presumed that there would soon issue in those countries patents which could be infringed by the 319 machine; (2) Messerschmitt had a corresponding application in the United States which was on that date involved in interference with Singer's Berla application, and Singer expected to prevail in this interference proceeding and receive claims that would cover the 319 machine and be infringed by the Messerschmitt machine; (3) The question before Singer was what action to take in connection with Messerschmitt so that Singer could freely manufacture and market the 319 machine in Germany, Belgium, Italy and Great Britain; (4) It would be to Singer's advantage to have a cross-licensing agreement executed as soon as possible in view of the present or potential infringement of the 319 ma- [fol. 2398] chine in Italy and Great Britain; and (5) Messerschmitt undoubtedly realized that it would lose the United States interference proceeding and that its machine would be subject to an action for infringement by Singer, based on several Singer-owned patents.

The Patent Department recommended that Singer make no further overtures to Messerschmitt lest Messerschmitt interpret such action as eagerness stemming from a weak position by Singer.

57. On December 21, 1956 Singer received word that Messerschmitt was willing to sign the agreement without the condition above mentioned, in Paragraph 55.

58. In March 1957, Singer received from Messerschmitt an executed cross-licensing agreement which Singer deemed deficient because it granted a license from Singer to Messerschmitt to make machines disclosed in Messerschmitt's

"German applications," which applications were not specified, whereas it had been agreed that the license to Messerschmitt from Singer under Singer-owned patents would be to make a particular machine, as disclosed in a specific Messerschmitt application or applications.

59. Arrangements were made for a conference with Messerschmitt on April 16, 1957. At that conference Messerschmitt and Singer reached and signed an agreement. A copy of said agreement is Exhibit S-4.

60. At the April 16, 1957 conference Messerschmitt advised Singer that it would be willing to assign the Messerschmitt United States application to Singer. Singer pre- [fol. 2399] pared and forwarded to Messerschmitt a form of assignment and of a license back, giving Messerschmitt a royalty-free, non-exclusive, non-transferable license under the patent. Messerschmitt objected to some of the wording of the license, particularly the non-transferable provision.

61. To resolve the conflict, a meeting was arranged on May 10, 1957 pursuant to which, on June 4, 1957, Messerschmitt executed an assignment to Singer of Messerschmitt's United States patent application Serial No. 548,481 and Messerschmitt received from Singer an agreement licensing Messerschmitt under the application and any patent issued thereunder. A copy of said assignment is Exhibit S-5. A copy of said agreement is Exhibit S-6.

62. On July 10, 1957 the interference between the Messerschmitt application, Serial No. 548,481, and the Perla application, Serial No. 473,855, was dissolved, since both applications were owned by the defendant. On October 22, 1957 Perla U. S. Patent No. 2,810,360 was issued to defendant.

63. On April 15, 1956 Joel G. Stanford, head of Singer's Patent Department, who had attended the two negotiating conferences relating to the Gegauf license agreement, recorded in a memorandum that he and Max L. Waterman, Vice President of Singer and head of its research and development department, had not approached Gegauf concerning the possible purchase of his patent with a license-back to Gegauf and that it was not believed to be the time to do so, but that Singer could consider the matter after [fol. 2400] it had more information and that if it were later concluded to be advisable, the subject could be raised at such time.

64. On April 20, 1956, a meeting was held in Milan, Italy, between Singer and Vigorelli representatives. Waterman recorded in a memorandum prepared on that date that Vigorelli had arranged for such meeting; that what Vigorelli had on his mind was now that Singer, Gegauf and Vigorelli had arrived at certain agreements that they should thereafter act in concert against others; that this the Singer representatives promptly said to Vigorelli was out of the question and advised him that what appeared to be proper action was for each one to prosecute his own patents and take care of any cases of infringement that might appear; and that this certainly would be Singer's attitude with respect to the patents that it owned.

The memorandum further recorded that Stanford advised Majnoni, Vigorelli's patent attorney, that Stanford and Waterman had decided not to say anything to Gegauf at that time but that they felt that Singer could prosecute any patent that would be issued on the Gegauf application better perhaps than Gegauf could; that Majnoni asked whether Singer would have any objection if word were passed on to Gegauf that Vigorelli was raising this point; and that Stanford replied that Singer would have no objection but that Singer did not wish itself to do this and would not want the suggestion to be made to Gegauf at this time as coming from Singer.

The foregoing was set forth in said memorandum, which is Exhibit S-7.

65. On June 11, 1956, Waterman wrote to Singer's Italian [fol. 2401] representative stating that during the Milan conference the idea had been put forward, Waterman believed by Vigorelli's attorney, that it would be advantageous to all parties if Singer owned the Gegauf U.S. patent application No. 358,377; that at such conference it was thought that it would be best if the suggestion that Gegauf transfer his patent application to Singer come to Gegauf from Vigorelli or some other source than Singer, and that it was left that Vigorelli's patent attorney would convey to Gegauf's patent attorneys in Zurich the suggestion that the transfer be made and, at the same time, set forth its advantages to all parties. Waterman further stated that he was expecting a visit in New York from Gegauf, Jr. in July and that before his arrival Waterman would be interested to know

if Vigorelli's patent attorney had transmitted the suggestion to Gegauf's attorneys and requested Singer's Italian representative to inquire as to whether or not this had been done.

66. The Italian representative, by letter of June 19, 1956, advised Waterman that he had received a communication from Majnoni, copy of which was enclosed. Majnoni had written that he had talked to Gegauf's patent attorneys and that the conversations had developed in such a way that the possibility and advantage of the Gegauf patent application being assigned to Singer could be considered in a definite way, that this had been done in such a way as to prompt an initiative by Gegauf and that Majnoni believed that Gegauf would get in touch with him within the next few days. He added that he had discussed the matter without in any way letting it be known that Singer was aware of the advances to Gegauf.

[fol. 2402] 67. On his return home from a sewing machine convention in Kansas City, Missouri, Gegauf, Jr. and his sister met with Waterman and Stanford at the Singer office in New York in the summer of 1956.

68. On August 22, 1956, an interference was declared between the Harris reissue application No. 516,058 and the Gegauf application No. 358,377.

69. In September, 1956, arrangements were made with Gegauf for Stanford to examine the Gegauf application and for a conference to be held on September 23, 1956 in Landau, Germany. Stanford examined the Gegauf application and confirmed that such application had an earlier priority date than Singer's Harris reissue application and expressed his opinion that a patent issued thereon could contain the claim of the Harris application and dominate the 401 machine.

70. A conference was held in Landau, Germany, on September 23, 1956 attended by Gegauf, Sr., Gegauf, Jr., other directors of the Gegauf Company and Waterman and Stanford. There was discussion of an assignment of the patent application to Singer and of a license back to Gegauf. Gegauf, however, was unwilling to assign for less than $250,000. This sum was many times more than Singer would consider paying for the application and Singer ended negotiations.

71. On March 15, 1957 Singer abandoned the interference set up between Singer's Harris claim and the Gegauf claim. On April 1, 1957 the Patent Office dissolved such interference.

72. On September 9, 1957 Singer's patent department [fol. 2403] proposed that Gegauf be approached again, expressing the feeling that Singer had nothing to lose and much to gain by again seeking to obtain the rights in the Gegauf United States patent application.

73. On September 12, 1957, Waterman advised Gegauf that Singer had just been notified by the United States Patent Office that its Harris reissue application was about to be issued as a patent and that Singer presumed therefore that in a short time a patent would be granted upon Gegauf's application. Waterman further stated that a proper enforcement of such patents might make it necessary to instigate patent suits against each of the importers of infringing machines in the United States, of whom there would perhaps be many, and that he thought that Gegauf would agree that neither one alone could protect himself most effectively. Waterman stated that he was planning to be in Europe within the next two or three weeks and that in view of the recent development of these patent applications it might be in Singer's and Gegauf's mutual interest to resume conversations while he was abroad.

74. On September 23, 1957, Singer's Patent Department prepared two forms of an assignment and license-back agreement for use in the event that Gegauf should be willing to sell to Singer its United States application. The Patent Department advised Waterman that the first form of agreement, providing for a single lump sum payment, had the advantage of giving Singer an irrevocable title to the application and that furthermore, under this agreement, it would not be incumbent upon Singer to deal any further with Gegauf in connection with this general [fol. 2404] subject. The Patent Department advised that the second form of agreement, providing for yearly payments, was advantageous in that Singer could at any time terminate the agreement, revert back to the original Singer-Gegauf license, and be liable to Gegauf for no further yearly payments. In this second form of agreement Singer's Patent Department suggested the use of fixed yearly payments, rather than royalties based upon the number of Singer

machines sold, so as to obviate the necessity for Singer to report to Gegauf the quantities of machines Singer manufactured and or sold under the agreement. Copy of each such form is Exhibit S-8 and Exhibit S-9, respectively.

75. Waterman inquired as to and on September 23, 1957 was advised by the Patent Department that the name of the law firm that represented Singer in patent matters in Switzerland was Messrs. Deriaz, Kirker & Cie.

76. Waterman and Stanford went to Europe and met with the Gegauf people, including Gegauf and Gegauf, Jr., in Zurich on October 16, 1957. There was discussed at that meeting an assignment of Gegauf's United States application with a license back to Gegauf to build and sell his machines just as he was then doing, which in no way would restrict sales by either party. After considerable discussion, the price of $40,000 was thought by Waterman to have been agreed upon, which comprehended the outright purchase by Singer of Gegauf's existing application with all its divisions. Gegauf's and Singer's patent attorneys were to get together to finalize the terms of the agreement in accordance with the discussions. Waterman believed [fol. 2405] that Gegauf would sign such an agreement when his patent attorney, who had not been present, was able to study the suggested draft of the agreement that Stanford had prepared. Waterman felt that some questions might be raised that would have to be clarified through correspondence after his return to New York but, that as of then, it looked as though agreement, if not entirely reached, could be arrived at in a reasonably short time.

77. Subsequent to the conference of October 16, Gegauf, through his attorney, raised three points, that is:

(1) Gegauf had prepared, but not yet filed, a divisional application covering a part of the subject matter of the original application. Gegauf did not want the contemplated agreement to include the divisional application.

(2) Gegauf wanted the agreement to provide that before bringing a legal action against a European company on any patent that should issue on the application, Singer should inform Gegauf and bring such action only after Gegauf had given his consent.

(3) Gegauf suggested a payment of $125,000, if made once and for all or, if not, $25,000 per year, as long as Singer kept the patent, with a minimum duration of the agreement of three years.

By letter of October 25, 1957, Kirker, of the firm of Deriaz, Kirker & Cie, reported the foregoing to Stanford and advised:

1. With respect to item (1): Kirker, after subsequently receiving telephone instructions from Waterman who was then in Frankfort, Germany, had later telephoned [fol. 2406] Gegauf's attorney and told him that Singer was interested only in buying the whole application and that there was no question of its making two separate agreements and two separate payments.

2. With respect to item (2): Kirker had replied to Gegauf's attorney that it would be better to set forth such condition by including the names of the companies which Gegauf had in mind and restricting such condition to such companies. Kirker further reported that apparently (although he was not absolutely sure) there were only three companies involved: Vigorelli, Necchi and Pfaff.

3. With respect to item (3): The conversation with Gegauf's attorney had left Kirker under the impression that an agreement might be obtained on the basis of approximately half the sum mentioned and that Gegauf considered Singer's proposal of $40,000 as minimum, subject to discussion, and similarly that the Gegauf counter-proposal was a maximum, also subject to discussion.

Kirker then advised Stanford that he was awaiting Stanford's instructions.

78. On October 30, 1957, Stanford, in response to Kirker's request, instructed him as follows:

As to Gegauf's first point, Singer had negotiated for and wanted the entire application.

As to the second point, Singer would agree to permit Necchi and Pfaff, in addition to Vigorelli, to sell their respective machines in the United States with-

out fear of infringement suits by Singer on claims allowed on such application.

[fol. 2407] As to the third point, Singer would be willing to pay $62,500 for the outright sale of the application to Singer, and authorized Kirker to go as high as $75,000.

Stanford advised Kirker to contact Gegauf's attorney and make known to him Singer's position.

79. On November 15, 1957, Kirker had an interview in Gegauf's office with Gegauf, Gegauf, Jr., an executive of Bernina, and Gegauf's patent attorney. Gegauf stated his conditions for an assignment of his application to Singer. These conditions were:

(a) The agreement would have to contain a clear undertaking from Singer that it would not manufacture a machine which was a copy of the Gegauf machine;

(b) Gegauf would retain the right to grant a sublicense to one European company, out of a list of such companies, under any patent issued on his application, and

(c) Gegauf would receive the sum of $125,000.

Gegauf explained that while he had no objection to making an assignment of his application by means of which Singer could stop as far as possible Japanese competitors in the United States market, he would do so only upon the conditions which he set forth.

With respect to his price of $125,000, Gegauf said that if he were to grant a license he would get every year many times more than the single payment of $125,000 and added that around him everybody was against the proposal of $125,000 and advised him to ask for a much higher sum. [fol. 2408] Gegauf asked Kirker what sum Singer was willing to offer and stated that he was not prepared to start bargaining and that he would not agree to a sum nearer to Singer's $40,000 offer than to his figure of $125,000. Kirker stated that in view of this he saw no possibility of going further since his instructions from Singer contained a maximum which was nearer to Singer's figure of $40,000 than to Gegauf's figure of $125,000 and stated that

he would ask Singer for specific instructions concerning the sum to be offered.

On November 18, 1957, Kirker reported the foregoing to Stanford and advised that it looked as if an agreement might be reached by offering $80,000 to $90,000 but that Singer might have to go up to $100,000.

80. Upon receiving the foregoing advice from Kirker, Singer decided that Stanford should go to Europe and attempt to conclude the agreement. Purposes, considerations and policies for Stanford's guidance were formulated by Milton C. Lightner, the then President of Singer, with the aid and approval of other executives of the Company. The said memorandum is set forth *in toto*:

> "The main purpose of Mr. Stanford's trip will be to obtain such control of the Gegauf patent applications in the United States as will put us in a position to own and control it in order to get the very best patents and bar import or U. S. production of mechanisms which would violate these patents.
>
> It was believed that agreement had been reached on the basis of a $40,000 payment and with Gegauf carrying out promises that he had made to grant certain licenses, probably to Pfaff and perhaps one or two others.
>
> The proposed agreement not only would have allowed these licenses to unnamed Europeans, but would [Vol. 2409] also have permitted Bernina to have a license under which Bernina machines would come into the U. S.
>
> Evidently, Gegauf has stiffened on price and we may have to pay as much as about three times the original figure. While this may seem high, yet over the years ahead the payment of such a price may well be justified by our having the ability to stop import of very low priced multi cam machines, not only as a result of the help that we would have in the U. S. market in preventing such import, but also because inability to enter the U. S. market may discourage some people from entering the field, and raise unit costs in the case of those who do produce such machines for other markets.

If we do have to pay such a price, it is very desirable to try to get some quid pro quo for the excessive price and this may well lie in this matter of licenses to the unnamed European manufacturers. Accordingly, we should not only endeavor to ascertain who it is that might get a license, but try to get Gegauf to refuse to give these licenses, or if he finds himself unable to do so, then to try to limit the license to a modest number of machines, thus leaving us free to either keep the flow of this type of machine down to the named figure, or (if we prefer) to negotiate for a license fee, which would somewhat compensate us for the nuisance value of such machines or for the high price that we paid for the patent.

While these efforts must be made and while one might expect that for $100,000 or $125,000 Gegauf would give this added protection to us, yet if we are not successful in that endeavor, it would seem as though the ability to exclude this kind of Japanese machine may be worth even this high a price.

If Bernina is to continue to have the right to send machines into the United States and if they consider that right important, they may very well see the wisdom of enabling us to stop other imports from Europe as well as those from Japan.

In the negotiations it may very well be desirable to start with the misunderstanding that has apparently arisen concerning price and, incidentally, to dispose of the question that seems to be in the mind of Gegauf, Jr., that in purchasing the patent, Singer wants to protect itself against claims of infringing Gegauf patents. Gegauf may be little on the defensive on the question price if he admits that $40,000 was the mutually satisfactory figure. Probably he will deny this and characterize the use of the figure as our offer but never agreed to by him. If we have to go up in our figure to come nearer to getting together with his idea, this would quite naturally open the discussion to the question of limitations that he wants to put upon our ownership.

[fol. 2410] Mr. Bruder offered the suggestion that Singer might agree to taking a certain number of

machines and marketing them in the U.S., this suggestion being put forward with the idea that it might help to eliminate licenses to anybody else and also eliminate Bernina imports to anyone other than ourselves. This suggestion, of course, necessitates that we guarantee a certain minimum import which presumably would have to be as much or more than the present Bernina imports. Mr. Bruder indicated a willingness to take as many as perhaps 75,000 over three years—maybe 100,000 over five years would be more interesting to Gegauf. However, it is difficult for us to estimate what would be agreeable because we have no information concerning present imports, but only the understanding that they are rather small (which might mean as little as 5,000 a year).

In determining whether to broach this idea in the course of negotiations, it must be remembered that getting control of the patent is the main objective, with the elimination or curtailment of European import as an important but secondary objective, and that with respect to these objectives, the idea of our purchasing any Bernina machines to be supplied to us under our own chosen trademarks and in our own chosen color (presumably different from Bernina) and possibly with changes in design, for which we would pay, is an idea that should be utilized only if it appears to be likely to help the negotiations. This characterization of the purchase idea as something to be used only if it seems it will *help* on the patent negotiation, is stressed for two reasons: The first is that as soon as one gets into the idea of buying machines, various complications will immediately develop—quantity, price, trademarks, existing arrangements with U.S. distributors, etc., etc., —all of which might very well divert attention from the main objective and perhaps hinder rather than help to get a patent agreement. The second reason is that if we reach an agreement on patent that is reasonably satisfactory to us and we get it put in writing and signed and paid for, we can then report the situation to New York and New York can then say whether in the light of whatever the patent arrangement turns out to be, New York wishes to have discussion opened

on the possibility of importing Bernina machines under our marks; or New York can say to let the operation of the patent agreement as drawn stand and make no overtures at the moment with respect to purchasing machines."

81. Stanford went to Switzerland and with Kirker attended a conference with representatives of Gegauf, including Gegauf, Sr. and Jr., which was held at Steckborn on December 4, 1957. An agreement was reached at such meet- [fol. 2411] ing and executed on December 5, 1957. A copy of such agreement is Exhibit S-10.

82. Singer has instituted the following proceedings:

(1) On May 20, 1958 Singer instituted an action in the United States District Court for the Southern District of New York (No. 133-350) against Brother International Corporation, an importer and distributor of sewing machines manufactured in Japan. The complaint alleged infringement of Gegauf Patent No. 2,832,302, issued on April 29, 1958, and of Harris Reissue Patent No. 24,370, issued on October 8, 1957. On January 5, 1959, Singer instituted another action in said Court (No. 141-237) against Brother International Corporation. The complaint alleged infringement of Johnson Patent No. 2,862,468, issued on December 2, 1958. Said actions are presently pending.

(2) On September 10, 1958 Singer instituted an action in the United States District Court for the Western District of South Carolina (No. 2,429) against Sewing Machine Exchange. The complaint alleged infringement of Gegauf Patent No. 2,832,302 and of Harris Reissue Patent No. 24,370. The action was terminated by a consent judgment enjoining the defendant from selling any machine embodying inventions described and claimed in said patents.

(3) On December 2, 1958 Singer instituted an action in the United States District Court for the Eastern District of South Carolina (No. AC-241) against ACO Appliance Distributing Company. The complaint, as amended, alleged infringement of Gegauf Patent No. 2,832,302, of Harris Reissue Patent No. 24,370 and of Johnson Patent No. 2,862,468. The action was terminated by a consent judgment enjoining

[fol. 2412] the defendant from selling any maching embodying inventions described and claims in said patents.

(4) On January 15, 1959 Singer filed a complaint before the United States Tariff Commission alleging it was the owner of Gegauf Patent No. 2,832,302. This complaint is Exhibit S-11. The complaint prayed that the Tariff Commission recommend to the President that household automatic zigzag sewing machines and parts thereof covered by the claims of said United States Patent No. 2,832,302 be excluded from entry into the United States for the term of said patent. This led to the Tariff Commission investigation No. 17, now pending.

83. The above mentioned actions against Brother International Corporation were based on the sale by Brother of Japanese-made Nippon machine-carried multiple cam zigzag machines sold under the trade names Select-O-Matic 100 and Pacesetter 200. The above mentioned action against Sewing Machine Exchange was based on the sale by Sewing Machine Exchange of a Japanese-made Sanshin machine-carried multiple cam zigzag machine sold under the trade name Universal. The above mentioned action against ACO Appliance Distributing Company was based on the sale by ACO of a Japanese-made Sanshin machine-carried multiple cam zigzag machine sold under the trade name Fleetwood.

84. (1) Except as set forth in paragraph 82 and by patent markings carried on its Class 401 machine, Singer has not brought any action, commenced any proceeding or made any attempt to enforce Gegauf Patent No. 2,832,302.

(2) Except in conjunction with an attempt by Singer [fol. 2413] to enforce Gegauf Patent No. 2,832,302, Singer has not brought any action, commenced any proceeding or made any attempt to enforce Harris Reissue Patent No. 24,370 or Johnson Patent No. 2,862,468.

85. Singer has not brought any action, commenced any proceeding or made any attempt to enforce Gegauf Patent No. 2,877,726 or Perla Patent No. 2,810,360 by suit, notice or threat of suit.

86. On September 12, 1956, Ralph E. Johnson, a member of the Singer Experimental Department in Elizabethport,

New Jersey, completed a design of a new replaceable cam zigzag machine (Par. 8(b)). This design is embodied in the Singer Class 403 machine. The Class 403 machine is provided with a single replaceable cam which is adapted to be tracked by a single cam follower. This machine is also provided with two manually operable levers, one for adjusting the needle position and the other for adjusting the amplitude of zigzag stitches. The first Class 403 machine was produced during the week ending November 29, 1958.

87. Singer is the owner of the following United States patents, copies of which are Exhibits S-12—S-16, each of which discloses a machine carried multiple-cam zigzag sewing mechanism:

(a) Gegauf Patent No. 2,832,302
(b) Harris Patent No. Re. 24,370
(c) Johnson Patent No. 2,862,468
(d) Perla Patent No. 2,810,360
(e) "Second" Gegauf Patent No. 2,877,726

88. In the years 1956, 1957, 1958 and 1959 Singer sold in the United States the number of units of the Singer 306 [fol. 2414] and 403 replaceable cam zigzag machines (Par. 8(b)) and of the Singer 319 and 401 multiple cam machines (Par. 8(c)) herein below set forth:

	1956	1957	1958	1959
306	48,014	19,308	9,927	13,308
403				50,269
319	56,965	31,838	4,199	1,028
401		74,503	147,446	155,422

Manufacture by Singer in the United States of the Singer 319 machine was commenced, and of the the 306 machine was stopped, in 1956. Of the Class 306 machines above set forth the following number thereof had been manufactured in the Singer Clydebank, Scotland plant (where they continue to be manufactured): 1956, 20,707; 1957, 17,708; 1958, 9,927 (all); 1959, 13,308 (all). All other machines above set forth, except 138 of the Class 319 machines, had been manufactured in the United States.

In the years 1958 and 1959 Singer's dollar volume of sales of the 401 machine amounted to $44,233,800 and $46,626,-

600 respectively, approximately 45% of its total gross dollar sales of all models of household sewing machines in the United States for each year.

89. The proceeding before the United States Tariff Commission referred to in paragraph 82(4) was stayed by the Commission upon the commencement of this action by the Government against Singer and is being held in abeyance by it pending the outcome of the action.

90. Exhibit S-17 is a chart listing various United States [fol. 2415] companies which, during the period from January 1957 to December 1959, have engaged in importing, assembling and/or distributing machine carried multiple cam, replaceable cam, and or manual zigzag sewing machines, manufactured in Japan by the manufacturers indicated on said chart. This list does not purport to be a full and complete listing; it merely lists those discovered by research of the defendant's staff. It is not a tabulation or listing of those not engaged in importing the types of machines described; nor a tabulation or listing of types of machines not imported by the importers, assemblers or distributors therein listed.

91. Exhibit S-18 is a chart listing various Japanese manufacturers which, during the period from January 1957 to December 1959, exported to the United States machine carried multiple cam, replaceable cam, and/or manual zigzag sewing machines manufactured by said companies with list of various model or trade names under which such machines are sold. This list does not purport to be a full and complete listing; it merely lists those discovered by research of the defendant's staff. It is not a tabulation or listing of those not engaged in manufacturing the types of machines described; nor a tabulation or listing of types of machines not manufactured by the companies therein listed.

92. Gegauf patent No. 2,832,302 discloses and claims a machine carried multiple cam zigzag machine (Par. 8(c)). Assuming, without the Government conceding, the validity of this patent in order to infringe the Gegauf patent a zigzag machine must incorporate therein a mechanism having, among others, each of the following features or their equivalents:

[fol. 2416] (1) a series of rotary cams having different stitch pattern configurations and mounted about a common axis,

(2) a cam follower mounted for movement radially of the common axis and having a single cam-engaging head with one end engaging and responding to the surface of a cam of the series, and

(3) a manually operable member for withdrawing the cam-engaging head from and radially of a selected cam surface; with

(4) the series of cams and the single cam-engaging head being relatively shiftable lengthwise of the common cam axis after the cam follower has been withdrawn radially from a selected cam thereby to effect a partial or a complete traverse of the series of rotary cams whereby the single cam-engaging head can be manually engaged with one cam after the other in any desired sequence.

93. The Government for purposes of this suit does not dispute the validity of the claims of the Gegauf Patent No. 2,832,302, as issued, and that Harris Patent No. Re 24,370 discloses a machine which is covered by Claim No. 1 of Gegauf Patent No. 2,832,302. The Singer 401 Machine is covered by Gegauf Patent No. 2,832,302. Nothing herein shall preclude the Government from offering evidence (reserving to defendant, however, the right to object on the ground of materiality, competency or relevancy) of agreements made, if any, and circumstances relating thereto, between Singer and the alleged co-conspirators relating to cooperation in the acquiring of grants of patent claims.

[fol. 2417] 94. Gegauf patent No. 2,832,302 does not cover a machine-carried multiple cam zigzag machine (Par. 8(c)), if, to effect a partial or a complete traverse of such machine's series of rotary cams, whereby its single cam-engaging head can be manually engaged with one cam after the other in any desired sequence, the series of rotary cams and the single cam-engaging head are relatively shiftable *radially* rather than lengthwise of the common axis. Examples of such a machine-carried multiple cam zigzag machine are the Feather Universal TViewer Model FSZ120, the Kyokuto Modern Model No. 116, the Kyokuto Vogue Stitch Model D and the Kyokuto Alden's Cam 3-in-1.

Each of the machines mentioned in the preceding paragraph incorporates therein a series of rotary cams which are concentrically arranged about a common axis and a single cam follower which must be shifted back and forth radially rather than lengthwise of the common cam axis in order sequentially to engage the various cams.

95. Gegauf patent No. 2,832,302 does not cover a machine-carried multiple cam zigzag machine (Par. 8(c)), if, to effect a partial or a complete traverse of such machine's series of rotary cams, whereby its single cam-engaging head can be manually engaged with one cam after the other in any desired sequence, the series of rotary cams and the single cam engaging head are relatively shiftable through rotation of the series of cams about their common axis rather than being relatively shiftable lengthwise of the common axis. Examples of such a machine-carried multiple cam zigzag machine are Sankyo Seiki's Consolidated Sewmor Model 770 (New Design), Consolidated Viscount 1959 Model 740 and Consolidated Belair 990 (New Design).

Each of the machines mentioned in the preceding paragraph incorporates therein a single cam follower and a series of cams which are formed as a series of stave-like surfaces about a barrel-shaped cam carrier mounted to turn [fol. 2418] about its longitudinal axis. The barrel-shaped cam carrier must be manually rotated about its longitudinal axis in order sequentially to engage the single cam follower with the various cams.

96. Gegauf patent No. 2,832,302 does not cover a machine-carried multiple cam zigzag machine (Par. 8(c)), if such machine is not provided with a manually operable member for withdrawing the cam-engaging head from and radially of a selected cam surface. An example of such a machine-carried multiple cam zigzag machine is the Borletti New Home Model 1102.

The machine mentioned in the preceding paragraph incorporates therein a series of rotary cams mounted about a common axis and a single cam follower with the series of cams and the cam follower being relatively shiftable lengthwise of the common cam axis under spring pressure to a preselected position without withdrawing the cam follower radially of a cam surface.

97. Gegauf patent No. 2,832,302 does not cover a machine-carried multiple cam-zigzag machine (Par. 8(c)), if such

machine's series of cams is provided with a series of cam-engaging heads of which each cam-engaging head is constrained to engage a respective one of the cams of the series of cams rather than with a single cam-engaging head relatively shiftable lengthwise of the common cam axis. Examples of such a machine-carried multiple cam zigzag are the Turissa Novomatic, the Bell-Messerschmitt Models 502 and 603N, the Pfaff Models 260 and 360 (formerly Models 230 and 332), the Gritzner-Kayser White Automatic Model 666, and the Fukoku Vogue Stitch Model 88.

Each of the machines mentioned in the preceding paragraph incorporates therein a series of rotary cams and a series of cam-engaging heads with each cam-engaging head being constrained to engage only one cam of the series of cams and with means whereby the series of cams and the series of cam-engaging heads may be relatively shifted so that the cams may be sequentially engaged one at a time with a respective one of such cam-engaging heads.

[fol. 2419] 98. Most of the sewing machines, including zigzag machines imported from Japan prior to 1959, consisted of the "head"—that is, the mechanism of the machine. In 1959 Brother and in 1960 Transworld Industries began importing heads to which there had been added in Japan the motor, lights and wiring. To such head there is added in this country, by importers or distributors, carrying cases, cabinets, equipment and appurtenances and, where not already so equipped, motor, wiring and lights, some of which various items may also be imported into this country. The assembled units are distributed principally through (1) department stores and mail-order houses, which order directly from distributors or factories in Japan or from distributors in the United States, and (2) wholesale distributors who import the machines directly or purchase them from importers. The assembled units are sold by distributors to other distributors or to retail outlets, such as department, appliance, furniture and hardware stores located in the various states of the United States. Some of such wholesale distributors, including Brother and New Home, the largest and one of the largest of such distributors, are subsidiaries of Japanese manufacturers, namely, Nippon and Janome, respectively, two of the largest manufacturers in Japan, and some of such wholesale distributors,

including said two distributors, are sole distributors for particular Japanese manufacturers.

99. Most of the sewing machines, including zigzag sewing machines, imported from Europe are complete machines, consisting of head, motor, wiring, lights, equipment and appurtenances. Defendant asserts and plaintiff does not [fol. 2420] deny that where adapted for use with a carrying case they are accompanied by such cases, and where adapted for use in a cabinet the cabinets are acquired and assembled to the machines in the United States. The assembled units are distributed principally through department stores and mail-order houses, which order directly from factories or distributors in Europe or from distributors in the United States, and through wholesale distributors who import the machines directly or purchase them from importers. The assembled units are sold by distributors to other distributors or to retail outlets, such as department, appliance, furniture and hardware stores, located in the various states of the United States. Some of such wholesale distributors are sole distributors for particular European manufacturers.

100. The Vogue Stitch Model No. 88, manufactured in Japan, which does not come within the claims of the Gegauf patent, does come within the claims of the Perla Patent No. 2,810,360 and the Johnson patent No. 2,862,468.

101. On or about January 15, 1959, defendant and Sears Roebuck & Company entered into an agreement, copy of which is Exhibit S-19.

102. On August 22, 1956 an interference was declared between the Harris re-issue application No. 516,058 and the Gegauf application No. 358,377, which interference was dissolved on April 1, 1957.

103. On October 8, 1957 the Harris Reissue Patent, No. 24,370, was issued to the defendant.

[fol. 2421] 104. On December 2, 1957 Gegauf filed a divisional application based upon his original application filed May 29, 1953, Serial No. 358, 377.

105. On December 5, 1959 Gegauf assigned both the original United States application No. 358,377, dated May 29, 1953, and the application divided therefrom to the defendant.

106. On April 29, 1958 Gegauf Patent No. 2,832,302 was issued to the defendant.

107. On March 17, 1959 Gegauf Patent No. 2,877,726, based upon the divisional application, was issued to the defendant.

108. On June 9, 1958 an interference was declared by the United States Patent Office between the Johnson application filed by the defendant on November 29, 1954, Serial No. 471,766, and an application of Vigorelli filed on November 23, 1953, Serial No. 303,760. Both of these applications related to a multi-cam mechanism of a zigzag sewing machine by which information is taken from two cams at the same time.

109. On June 17, 1958 the aforesaid interference was disposed of by the abandonment of it by Vigorelli.

110. To properly and efficiently operate any household sewing machine, including a zigzag stitch machine, it must first be threaded with needle and bobbin threads and three adjustments must be made to insure that the machine will sew with the requisite thread tension, stitch length and work pressure. During the operation the operator must control the speed of the machine and must guide the work material to be stitched, in synchronization with such speed, to insure [fol. 2422] that the stitches will be formed in the desired area of the work material. With each of the three general types of household zigzag sewing machines the operator must in addition make a pre-selection through a control device determining the width of the zigzag stitch to be produced. With a manually operated machine (Par. 8(a)) the zigzag stitch pattern may be varied by the manual manipulation of the stitch width control during machine operation, the results obtained varying with the artistry and skill of the operator. With the replaceable cam (Par. 8(b)) and machine-carried multiple cam (Par. 8(c)) types of machines the zigzag stitch pattern is predetermined by the configuration of the particular cam used, which cam in each instance is selected by the operator, by, in the case of the replaceable cam machine, the manual replacement of one cam with another cam and, in the case of the machine-carried multiple cam machine, by the manual use of a dial, handle or knob to select one of a plurality of machine-carried cams.

111. As used in Singer letters and reports, the following phrases and symbols have the meanings indicated:

(1) "Modified 206 Machine" refers to the 306 machine while in an experimental or development stage.

(2) "Modified 306 Machine" and "Experimental 1040 Machine" refer to the 319 machine while in an experimental or development stage.

(3) "Experimental 282 Machine" refers to the 401 machine while in an experimental or development stage.

[fol. 2423] 112. By June, 1959, Singer had spent over $9,000,000 for research, development, tooling and advertising on its Class 401 machine, of which approximately $4,700,000 was spent for tooling.

113. Exhibit S-20 is a chart listing various United States companies which, during the period from January 1957 to December 1959, have engaged in importing, assembling and/or distributing machine carried multiple cam, replaceable cam, and/or manual zigzag sewing machines, manufactured in Europe by the manufacturers indicated on said chart. This list does not purport to be a full and complete listing; it merely lists those discovered by research of the defendant's staff. It is not a tabulation or listing of those not engaged in importing the types of machines described; nor a tabulation or listing of types of machines not imported by the importers, assemblers or distributors therein listed.

114. Exhibit S-21 is a chart listing various European manufacturers which, during the period from January 1957 to December 1959, exported to the United States machine carried multiple cam, replaceable cam, and or manual zigzag sewing machines manufactured by said companies with list of various model or trade names under which such machines are sold. This list does not purport to be a full and complete listing; it merely lists those discovered by research of the defendant's staff. It is not a tabulation or listing of those not engaged in manufacturing the types of machines described; nor a tabulation or listing of types of machines not manufactured by the companies therein listed.

[fol. 2424] 115. Exhibit S-22 is a chart listing machine carried multiple cam zigzag sewing machines exported to the United States from Europe which come within Gegauf Patent No. 2,832,302, the Harris Patent or the Johnson

Patent and showing the patent or patents which such machines come within.

116. Exhibit S-23 is a chart listing machine carried multiple cam zigzag sewing machines exported to the United States from Europe and Japan which come within Gegauf Patent No. 2,877,726 ("Second" Gegauf) or the Perla Patent and showing the patent or patents which such machines come within.

117. During the years 1958 and 1959, imports of the Lady Kenmore model machine carried multiple cam zigzag sewing machines were, respectively, 250 and 20,925. These machines were manufactured in Western Germany by Gritzner-Kayser A.G. and were imported into the United States by Sears Roebuck & Co.

118. During the years 1957, 1958 and 1959, the total imports of Husqvarna models 21A and 51 machine carried multiple cam zigzag sewing machines were, respectively, 3,250, 3,021 and 6,200.

119. During the years 1957, 1958 and 1959, the total imports of the Phoenix model 283 machine carried multiple cam zigzag sewing machine were, respectively, 410, 83 and 149.

120. During the years 1957, 1958 and 1959, the total imports of the Pfaff models 260 and 360 machine carried multiple cam zigzag sewing machines were, respectively, 9,010, 13,424 and 10,714.

121. During the years 1957, 1958 and 1959, the total imports of the Gegauf Record and Favorit model machine carried multiple cam zigzag sewing machines were, re-
[fol. 2425] spectively, 1,600, 3,405 and 2,150.

122. During the years 1957 and 1958, the total imports of the Vigorelli Robot model machine carried multiple cam zigzag sewing machines were, respectively, 472 and 400. No such machines were imported during 1959.

123. The retail unit price of the head of Singer's Class 401 Machine (Par 8(c)) is $300.00. The retail unit price of the head of Singer's Class 403 Machine (Par. 8(b)) is $240.00.

124. During the year 1957 1400 units of the Gritzner-Kayser White Model 666 were imported. During the year 1959 ten units of the Turissa Novomatic were imported.

125. During the years 1957, 1958 and 1959, the approxi-

mate total imports of the Necchi Supernova replaceable cam zigzag sewing machine were, respectively, 25,423, 17,696 and 16,419.

126. During the years 1957, 1958 and 1959 the approximate total imports of the Elna Supermatic replaceable cam zigzag sewing machine were, respectively, 11,704, 12,002 and 9,976.

127. Exhibit S-24 is a chart listing Singer's United States sales of household sewing machines by style and year, in units sold from 1952 through 1960 and in total dollar volume from 1956 through 1960.

128. Machine carried multiple-cam zigzag sewing machines exported to the United States from Japan during [fol. 2426] the years 1957, 1958 or 1959 which come within Gegauf patent No. 2,832,302 or Harris patent Re. No. 24370 are set forth below:

Manufacturers	Model Names	Gegauf #1 Pat. No. 2,832,302	Harris Reissue (RE 24370)
Banshu	New Home Model 8033[3]	X	X
Sankyo Seiki	Consolidated Belair 990[2] (Old Design)	X	X
	Consolidated Sewmor 770[2] (Old Design)	X	X
Nippon	Select-O-Matic 90	X	X
	Wizard 150	X	X
	Sovereign 170[3]	X	X
	Super Select-O-Matic 100	X	X
	Pacesetter 200[3]	X	X
Sanshin	Universal Two-Selector Handle Model[3]	X	X
	Universal Single Dial Model[4]	X	X
	Universal Design-O-Matic[4]	X	X
Koyo Seiko	Free-Westinghouse 803A[2]	X	

[1] First imported in 1958.
[2] No imports after 1958.
[3] First imported in 1959.
[4] Also sold under the trade names of Fleetwood 958 and Gimbel's Single Dial

129. Machine carried multiple-cam zigzag sewing machines exported to the United States from Japan during the years 1957, 1958 or 1959 which infringed Johnson patent No. 2,862,468 were the Fukoku Vogue Stitch Model 88 (first imported in 1958) and the above set forth Sanshin models and the above set forth Nippon Pacesetter 200 model.

[fol. 2427] 130. The number of Japanese machine carried multiple-cam, replaceable cam and manual zigzag sewing machines imported into the United States in the years 1957, 1958 and 1959 and the number of such multiple cam machines that come within and the number thereof that do not come within Gegauf Patent No. 2,832,302 are set forth in Exhibit S-25. The number of such multiple cam machines which come within Gegauf Patent No. 2,832,302 imported in each such year are set forth by manufacturer and trade name under which sold in Exhibit S-26. The number of such multiple cam machines which do not come within Gegauf Patent No. 2,832,302 imported in each such year are set forth by manufacturer and trade name under which sold in Exhibit S-27.

131. The number of European machine carried multiple-cam and replaceable cam sewing machines imported into the United States in the years 1957, 1958 and 1959 and the number of such multiple cam machines that come within and the number thereof that do not come within Gegauf Patent No. 2,832,302 are set forth in Exhibit S-28. The number of such multiple cam machines which come within Gegauf Patent No. 2,832,302 imported in each such year are set forth by manufacturer and trade name under which sold in Exhibit S-29. The number of such multiple cam machines which do not come within Gegauf Patent No. 2,832,302 imported in each such year are set forth by manufacturer and trade name under which sold in Exhibit S-30.

132. During the years 1957, 1958 and 1959 the total imports of the Borletti New Home Model 1102 machine carried multiple cam zigzag machine were respectively 2,909, 500 and 625.

[fol. 2428] 133. The following persons mentioned in this Statement of Facts or in certain Singer correspondence have the positions or occupations indicated:

Leo Adamson, (Retired) Former General Manager of Singer in Germany.

Barzano and Zanardo, Firm of Italian Patent Attorneys.

C. F. Baumann, Director General of Singer in Italy.

Marshall J. Breen, Patent Counsel, The Singer Manufacturing Company.

Charles F. Bruder, Vice-President, Singer Sewing Machine Company.

Rudolph Busselmeier, German Patent Attorney.

Cicogna, Franco & Co., Italian Patent Attorneys.

Harold R. Crawford, Vice-President, Singer Sewing Machine Company.

Cruikshank & Fairweather, British Patent Attorneys.

W. P. Evans, (Retired) Former Director General of Singer in Italy.

K. Gebhardt, Managing Director of Singer German Factory.

Fritz Gegauf, President, Fritz Gegauf A. G., Bernina Nahmaschinenfabrik.

Fritz Gegauf, Jr., Fritz Gegauf A. G., Bernina.

Robert I. A. Gray, Member of Research Division, The Singer Manufacturing Company.

Robert B. Harmon, Patent Attorney, Washington, D. C.

Peter Kirby, Canadian Patent Attorney.

Donald P. Kircher, President of The Singer Manufacturing Company since January 1, 1958, former Vice-President.

G. E. Kirker, Swiss Patent Attorney, Member of the Firm of Deriaz, Kirker and Cie.

John Z. Kraemer, Economist, The Singer Manufacturing Company.

Tadeusz Krzyzaniak, Member of Research Division, The Singer Manufacturing Company.

Dr. Spirito Lando, Assistant to Director General of Singer in Italy.

Milton C. Lightner, Chairman of Board of Directors since January 1, 1958, former President, The Singer Manufacturing Company.

Mark A. Lollate, Works Manager of Italian Singer Factory.

Marcello Majnoni, Italian Patent Atorney, Member of the Firm of Cicogna, Franco & Cie.

James M. McKinnon, (Deceased) Former General Manager, Singer, Japan.

Donald G. Robbins, Vice-President and Treasurer, The Singer Manufacturing Company.

[fol. 2429] Joel G. Stanford, Chief Patent Counsel, The Singer Manufacturing Company.

Robert W. Stewart, Vice President, The Singer Manufacturing Company.

Michael S. Stryker, Patent Attorney, New York, N. Y.

Max L. Waterman, (Retired November 1, 1960) Former Vice-President, The Singer Manufacturing Company.

Herbert J. Goosman, (Retired) Former Assistant Vice-President, The Singer Manufacturing Company.

Dr. Ernst Wiegand, German Patent Attorney.

Willi, Swiss Patent Attorney, Member of the Firm of E. Blum.

Chester A. Williams, Jr., Patent Counsel, The Singer Manufacturing Company.

Edgar Winteler, (Retired) Former General Manager, Singer, Switzerland.

134. The Singer Class 401 machine (Par. 8(c)) manufactured abroad is manufactured in Monza, Italy and Karlsruhe, Germany factories, which on July 26, 1957 were instructed to begin tooling for production of such machine. Manufacture thereof began in February, 1960. The first such machine was sold in France in May, 1960.

135. Exhibits S-31, S-32, S-33 and S-34 are tabulations with certain English translations superimposed thereon compiled by the Japanese Ministry of International Trade and Industry, showing, under the headings "Semi-Zigzag," "Semi-Automatic," "Full Zigzag" and "Full Automatic," the number of household zigzag sewing machines (head only) approved for export from Japan to the United States during the years 1957, 1958, 1959 and 1960, respectively. As used in the above quoted headings, "zigzag," whether "semi" or "full," refers to manually operated zigzag sewing machines. "Automatic," whether "semi," "simple" or "full," refers to any zigzag sewing machine having a cam (whether multiple cam or replaceable cam) controlled needle. The words "semi," "simple" and "full" refer to the number of positions from which the needle of the machine may operate, "simple" and "full" each indicating an ability to operate from three positions, center or either side, and "semi" indicating an ability to operate from not [fol. 2430] more than two such positions. "Full," as distinguished from "simple," indicates that control of the needle position can be regulated by cam action.

136. During the years 1954, 1955 and 1956, the total imports of Brother model 90 machine-carried multiple cam

zigzag sewing machines were, respectively, 1,800, 9,300 and 8,375 units and, during the year 1956, the total imports of Brother model 200 machine-carried multiple cam zigzag sewing machines were 1,190 units.

137. During the year 1956, the total imports of the Sanshin AZ-5 machine-carried multiple cam zigzag machines were 5,925 units.

138. Exhibits S-36 to S-79 are true copies of genuine original advertisements which respectively appeared in the periodical listed and upon the date set forth opposite the Exhibit number:

S-36	"Behind The Scenes"	April, 1959
S-37	"Behind The Scenes"	February-March, 1959
S-38	"Behind The Scenes"	February-March, 1959
S-39	"Behind The Scenes"	April, 1959
S-40	"Behind The Scenes"	October, 1957
S-41	"Behind The Scenes"	December, 1958
S-42	"Behind The Scenes"	July-August, 1958
S-43	"Behind The Scenes"	January, 1958
S-44	"The Sewing Machine News"	June, 1956
S-45	"The Sewing Machine News"	June, 1956
S-46	"Good Housekeeping"	January, 1960
S-47	"Good Housekeeping"	November, 1957
S-48	"Ladies Home Journal"	May, 1956
S-49	"Ladies Home Journal"	March, 1956
S-50	"McCall's"	December, 1955

[fol. 2431]

S-51	"Butterick Pattern Book"	Spring, 1958
S-52	"Sears, Roebuck and Company Catalog"	Spring, 1960
S-53	"Life"	April 23, 1956
S-54	"Life"	May 21, 1956
S-55	"Life"	March 2, 1956
S-56	"Life"	March 2, 1956
S-57	"Life"	October 22, 1956
S-58	"Life"	January 9, 1956
S-59	"Life"	February 7, 1955
S-60	"Vogue"	September, 1957
S-61	"McCall's Pattern Book"	Fall, 1957
S-62	"McCall's Pattern Book"	January, 1955
S-63	"Good Housekeeping"	April, 1959
S-64	"Parents"	November, 1957
S-65	"Simplicity Pattern Book"	Fall-Winter, 1960
S-66	"Simplicity Pattern Book"	Fall-Winter, 1960
S-67	"Good Housekeeping"	October, 1958
S-68	"Behind The Scenes"	January, 1958
S-69	"Behind The Scenes"	January, 1958
S-70	"McCall's"	Spring, 1961
S-71	"McCall's"	Spring, 1961
S-72	"Behind The Scenes"	March, 1960
S-73	"Good Housekeeping"	December, 1959
S-74	"Good Housekeeping"	June, 1960
S-75	"McCall's Pattern Fashions"	Summer, 1960
S-76	"Behind The Scenes"	November, 1958

S–77	"McCall's"	September, 1955
	"Ladies Home Journal"	October, 1955
	"McCall's Pattern Book"	Winter, 1955

[fol. 2432]

S–78	"Life"	February 7, 1955
	"Look"	February 22, 1955
S–79	"Saturday Evening Post"	April 28, 1959
	"Life"	April 23, 1959
	"Look"	April 28, 1959
	"Ladies Home Journal"	April 28, 1959
	"McCall's"	April 28, 1959
	"Good Housekeeping"	April 21, 1959
	"Parents"	April 24, 1959

Each of the following periodicals at the respective times set forth above with respect to advertisements appearing in said periodical was and now is distributed in the United States to the public:

"Life"
"Look"
"Parents"
"Saturday Evening Post"

Each of the following periodicals at the respective times set forth above with respect to advertisements appearing in said periodical was and now is distributed in the United States to the household sewing machine trade:

"Behind The Scenes"
"The Sewing Machine News"

Each of the following periodicals at the respective times set forth above with respect to advertisements appearing in said periodical was and now is distributed in the United States both to the public and to the household sewing machine trade:

"Good Housekeeping"
"Ladies Home Journal"
"McCall's"
"Butterick Pattern Book"
"Sears, Roebuck and Company Catalog"
"McCall's Pattern Book"
"Simplicity Pattern Book"
"Vogue"
"McCall's Pattern Fashions"

139. Exhibits S-80 to S-85 are true copies of genuine [fol. 2433] original articles or reports which respectively appeared in the periodical listed and upon the date set forth opposite the Exhibit number:

S-80	"Consumers' Research Bulletin"	September, 1952
S-81	"Consumers' Reports"	November, 1953
S-82	"Consumers' Research Bulletin"	November, 1955
S-83	"Consumers' Research Bulletin"	October, 1956
S-84	"Consumers' Reports"	October, 1957
S-85	"Good Housekeeping"	March, 1961

Each of the following periodicals at the respective times set forth above with respect to articles or reports appearing in said periodical was and now is distributed in the United States to the public and to the household sewing machine trade:

"Consumers' Research Bulletin"
"Consumers' Reports"
"Good Housekeeping"

140. Pursuant to the licensing agreement from Singer to Sears, Roebuck & Company, dated January 15, 1959 Sears made royalty payments for the number of units of the Lady Kenmore machine-carried multiple cam zigzag sewing machine manufactured by Gritzner-Kayser, A.G., for the periods of time as listed below:

Period	Units	Royalty Paid
April 29/58—Dec. 31/58	2501	$ 1,000
Jan. 1/59—Mar. 31/59	3746	34,365
April 1/59—June 30/59	4582	40,080
July 1/59—Sept. 30/59	5344	41,450
Oct. 1/59—Dec. 31/59	7253	27,000
Jan. 1/60—Mar. 31/60	5400	24,000
April 1/60—June 30/60	3[illegible]0	14,220
July 1/60—Sept. 30/60	1866	10,215
Oct. 1/60—Dec. 31/60	1362	10,215
Oct. 1/60—Dec. 31/60	1362	

[fol. 2434] 141. Sears, Roebuck & Co. offered for sale a machine-carried multiple-cam zigzag sewing machine in each of its general catalogs for Spring and Summer 1960 and Fall and Winter 1960. In each of said catalogs such machine was offered as its top of the line, highest priced machine. Sears, Roebuck has not included this machine in its Spring-Summer, 1961 general catalog and Sears, Roebuck has no orders pending for such machine and no plans at

present for the placement of orders for such machine. In its Spring and Summer 1961 general catalog Sears, Roebuck & Co. is offering for sale a replaceable cam machine as its top of the line, highest priced machine.

142. Singer's Class 401 multi-cam zigzag sewing machine, with carrying case, sells at retail in the United States at $340. Singer's Class 306 and 403 replaceable cam zigzag sewing machines, with carrying cases, sell at retail in the United States at $202 and $280, respectively. Singer's Class 206 manual zigzag sewing machine, with carrying case, sale of which terminated in 1958, sold at retail in the United States in 1958 at $202.

143. Japanese and European multi-cam, replaceable cam and manual zigzag sewing machines are sold by retail dealers throughout the United States, most of whom determine and fix their own list prices for machines handled by them and the actual prices at which they sell such machines, with the result that the same machine may have different list prices and may be sold at different prices in different shops. The price at which such a machine may be sold is generally determined by bargaining at the dealer's [fol. 2435] shop, and may be sold at the list price or for an amount off the list price. Dealers' list prices for a particular European-made zigzag sewing machine do not differ as much as dealers' list prices for a particular Japanese-made zigzag sewing machine. Generally, a customer can bargain a greater amount off list price for Japanese-made machines than can be bargained off list price for European-made machines. List price includes those prices that a retailer might quote to a customer for the purpose of presenting some price and the actual selling price may be substantially reduced.

144. Retail selling prices of sewing machines depend upon numerous factors, including, among others, quality of machine, machine features, appurtenances and attachments accompanying the machine, availability of service, availability of parts, type and extent of financing arrangements made available, furnishing of lessons or instructions as to the use of the machine, type and effective time of guarantee, cost of manufacture, cost of distribution, location and type of shop at which machine is sold, and promotion and advertising expenditures.

145. A customer's selection of a sewing machine depends upon numerous factors, including, among others, the reputation of the manufacturer or seller of the machine, quality of machine, price, availability of financing arrangements and type and term thereof, availability of service, availability of parts, furnishing of lessons or instructions as to the use of the machine, machine features and appurtenances and attachments accompanying or available for [fol. 2436] use with the machine, type and effective time of guarantee, location and type of shop at which machine is sold, and the customer's psychological approach as reflected in such things as a desire for a machine of a particular quality, i.e., minimum workable, average or best available, susceptibility to persuasion by salesmanship, reaction to the country of origin of a machine and responsiveness to various promotion and advertising techniques.

146. If called to testify employees of Singer would state under oath that they were instructed to obtain the initial price and the lowest price at which zigzag sewing machines listed in Exhibits S-18, S-21 and other zigzag sewing machines could be purchased at retail; and further that they obtained such prices for many of the machines referred to in such Exhibits and for other machines and further that:

They found initial retail prices of Japanese-made multi-cam zigzag sewing machines of various models and styles at various amounts, including a low initial price of approximately $90 and a high initial price of approximately $340, and various intermediate initial prices, including prices of approximately $100, $110, $140, $180, $190, $200, $250 and $290;

They could purchase Japanese-made multi-cam zigzag sewing machines of various models and styles [fol. 2437] at retail at various amounts, including a low price of approximately $90 and a high price of approximately $220, and at various intermediate amounts, including prices of approximately $100, $120, $130, $140, $150, $160, $170, $190, and $200;

They found initial retail prices of European-made multi-cam zigzag sewing machines of various models and styles at various amounts, including a low initial price of approximately $250 and a high initial price of

approximately $400, and various intermediate initial prices, including prices of approximately $280, $340, $360, $380 and $390;

They could purchase European-made multi-cam zigzag sewing machines of various models and styles at retail at various amounts, including a low price of approximately $230 and a high price of approximately $400, and at various intermediate amounts, including prices of approximately $250, $280, $290, $300, $330, $340, $360, $370, and $390;

They found initial retail prices of Japanese-made replaceable cam zigzag sewing machines of various models and styles at various amounts, including a low initial price of approximately $100 and a high initial price of approximately $340, and various intermediate initial prices, including prices of approximately $130, $140, $170, $190, $200, $230, $250, $270, $290 and $330;

They could purchase Japanese-made replaceable cam zigzag sewing machines of various models and styles at retail at various amounts; including a low price of approximately $70 and a high price of approximately [fol. 2438] $215, and at various intermediate amounts, including prices of approximately $80, $90, $100, $110, $120, $130, $140, $150, $160, $170, $180, $190, and $200;

They found initial retail prices of European-made replaceable cam zigzag sewing machines of various models and styles at various amounts, including a low initial price of approximately $185 and a high initial price of approximately $390, and various intermediate initial prices, including prices of approximately $250, $260, $290, $300, $320, $340, $350, $360, $370 and $380;

They could purchase European-made replaceable cam zigzag sewing machines of various models and styles at retail at various amounts, including a low price of approximately $110 (for a slightly used machine) and a high price of approximately $390, and at various intermediate amounts, including prices of approximately $200, $240, $220, $230, $250, $260, $270, $280, $290, $310, $320, $330, $340, $360 and $380;

They found initial retail prices of Japanese-made manual zigzag sewing machines of various models and styles at various amounts, including a low initial price of approximately $90 and a high initial price of approximately $290, and various intermediate initial prices, including prices of approximately $120, $130, $140, $150, $160, $180, $190, $200 and $230;

They could purchase Japanese-made manual zigzag [fol. 2439] sewing machines of various models and styles at retail at various amounts, including a low price of approximately $65 and a high price of approximately $180, and at various intermediate amounts, including prices of approximately $70, $90, $100, $110, $120, $130, $140 and $150;

They found initial retail prices of European-made manual zigzag sewing machines of various models and styles at various amounts, including a low initial price of approximately $180 and a high initial price of approximately $440, and various intermediate initial prices, including prices of approximately $230, $260, $270, $290, $320 and $330;

They could purchase European-made manual zigzag sewing machines of various models and styles at retail at various amounts, including a low price of approximately $145 and a high price of approximately $360, and at various intermediate amounts, including prices of approximately $160, $170, $180, $200, $220, $240, $260 and $290.

Certain models and styles of imported zigzag sewing machines other than those shopped, including multi-cam, replaceable cam and manual machines of Japanese manufacture, may be purchased.

The Government does not concede that the said shoppers reports represent a survey made for any other purpose than to show that purchases could have been made at the prices noted.

147. Exhibit S-86 is a tabulation showing specific zigzag sewing machines, model name and manufacturer thereof, [fol. 2440] and the price at which each of such machines

was actually purchased at retail in single transactions in the United States during the period 1957 to 1960, inclusive.

148. Exhibits S-87 to S-92, inclusive, set forth the model name and retailer of specific zigzag sewing machines shopped by employees of Singer and either the initial price and the price at which the store was willing to sell such machines or the single price specified by the store for such machines, which single price may have been an initial price or a price at which the store was willing to sell such machines, or both. Except where indicated, such Exhibits and the prices set forth in Paragraph 146 do not reflect what trade-in allowance, if any, would have been made on trade-in merchandise or the terms and conditions of any such trade-in allowance, if available. Such Exhibits and the prices set forth in Paragraph 146 were compiled from among shoppers reports, which are Exhibits S-93 to S-431, inclusive, supplemented by telephone conversations with such shoppers solely to identify the type of zigzag sewing machine shopped. The entries on Exhibits S-87 to S-92, inclusive, for the zigzag sewing machines which were identified by such telephone conversations are marked by an asterisk on such Exhibits.

149. Multi-cam [Par. 8(c)], replaceable cam [Par. 8(b)] and manually operated [Par. 8(a)] zigzag sewing machines are not necessarily of corresponding quality, either as compared with zigzag sewing machines of the same type or as compared with zigzag sewing machines of a different type, so that, for example, a relatively high priced manually operated machine may be of superior quality to a relatively low priced multi-cam machine, relatively low priced re-
[fol. 2441] placeable cam machine or relatively low priced manually operated machine. The price of the machine, regardless of type, in part depends upon the attachments or appurtenances which may be or may not be part of such machine and other factors all as set forth in Paragraph 144.

[fols. 3274-3277] IN UNITED STATES DISTRICT COURT,
SOUTHERN DISTRICT OF NEW YORK

Civil Action No. 154-108

[Title omitted]

PLAINTIFF'S STATEMENT OF CONTENTIONS—March 24, 1961

Pursuant to Pre-Trial Order of the Court in the subject case, the Plaintiff submits herewith its contentions.

• • • • • • • •

[fol. 3278] Prelude to the Formation of the Conspiracy

10. Prior to the formation of the tripartite conspiracy and on or about November 17, 1955 defendant, though confident that it could defeat or severely limit Vigorelli's claims, entered into an agreement with Vigorelli [Exh. S-2], whereby each party undertook to refrain from instituting any opposition, nullity or invalidation proceedings in any country against or otherwise attacking the other's patent applications, for the purpose of pooling their respective patent interests in order to strengthen and broaden their patent position with respect to machine carried multi-cam household sewing machines.

• • • • • • • •

12. Defendant, prior to the formation of the tripartite conspiracy and in December, 1955, was advised by Vigorelli that Vigorelli had executed an agreement with Gegauf which was similar to the one entered into between defendant and Vigorelli, as described in paragraph 10, above; and accordingly, defendant enlisted Vigorelli's assistance in order to obtain a similar agreement with Gegauf.

[fol. 3279] FORMATION AND OPERATION OF THE CONSPIRACY

13. Pursuant to and in effectuation of the combination and conspiracy:

A. The defendant, with the preparatory assistance of Vigorelli, entered into a written agreement with Gegauf dated April 14, 1956 [Exh. S-3] wherein in order to assure, to the greatest possi-

ble extent, the granting to one or both of them of patents covering machine carried multi-cam household sewing machines with the broadest of claims, each agreed, 1) not to take any action in any country, the result of which might restrict the scope of the claims of the other's patents or patent applications; 2) to facilitate the allowance in any country of claims as broad as possible; and 3) not to attack each other's patents. This agreement is itself unlawful for the reasons given in paragraph 14, below. The purpose of this agreement was to assure the granting of broad patents so that such patents could be used in patent attacks upon persons dealing in the said Japanese-made machines in the United States and elsewhere.

• • • • • • •

C. Gegauf, at the suggestion and with the approval of Vigorelli, assigned his United States Patent Applications Nos. 358,377 and 700,079 to the defendant [Exh. S-10] for the purpose of placing within the control of Singer several United States patents relating to machine carried multi-cam household sewing machines (under which the defendant was already free to manufacture and [fol. 3280] sell its built-in cam machines free of any royalty) so that the defendant, for the benefit of itself and the other conspirators, could employ such patents issuing thereon, together with other United States patents or patent applications it owned, to eliminate competition from those United States importers, distributors, and retailers dealing in Japanese-made machine carried multi-cam household sewing machines. Through this assignment, an additional dimension was added to patents which might issue on the applications namely the capacity of being asserted by defendant, as an American assignee, in a proceeding before the United States Tariff Commission for the purpose of obtaining a Presidential Order barring imports into the United

States of said Japanese-made machines. This agreement is itself unlawful for the reasons given in paragraph 17, below.

• • • • • • •

[fol. 3281] 14. A. The Singer-Gegauf agreement of April 14, 1956 [Exh. S-3] described in paragraph 13A above, is unlawful *inter alia*, because:

(1) the restraint effected thereby was the primary purpose of such agreement and was not ancillary to any cross-licensing agreement or any otherwise legitimate agreement; and

[fol. 3282-3284] (2) the degree of restraint effected thereby unreasonably exceeds that degree which may have been necessary to effect any cross-licensing agreement or any otherwise legitimate agreement.

B. That the very nature of the agreement creates such an unreasonable restraint is demonstrated by the fact that it prevents the parties thereto from fully exercising their rights under the laws of the United States and the rules of the United States Patent Office, to wit:

(1) prior to the declaration of any interference between them and prior to the designation of the count(s) of any interference, the parties agreed to preclude themselves from moving to dismiss interferences on the ground that the count(s) involved in the interference was unpatentable;

(2) prior to the declaration of any interference between them and prior to the designation of the count(s) of any interference, the parties agreed to preclude themselves from moving to amend the interferences by substituting, for a count(s) believed to be too broad to support the granting of a patent, a count(s) of narrower scope;

• • • • • • •

[fol. 3288] IN UNITED STATES DISTRICT COURT, SOUTHERN DISTRICT OF NEW YORK

Civil Action No. 154-108

[Title omitted]

PLAINTIFF'S STATEMENT SETTING FORTH THE SIGNIFICANCE OF DOCUMENTS TO BE OFFERED INTO EVIDENCE—April 14, 1961

Pursuant to the pretrial order of the Court dated April 7, 1961, the plaintiff herewith serves defendant with a set of documents upon which it will rely in presenting its case-in-chief. These documents have been marked as an aid to the Court and the defendant and pursuant to said pretrial order. The plaintiff reserves the right to offer in evidence each of the documents in its entirety.

The documents have been marked in red in accordance with the method outlined below and attached hereto is a statement indicating the particular significance of such documents.

The documents fall into three groups:

1. Documents which are marked "all" on their face. These documents are included in the attached lists and are documents the entire contents of which are significant. Some of these documents have, in addition, been underlined or sidelined in red in order to indicate portions of particular significance;
2. Documents which are marked "out" on their face. These are listed on Appendix A and are documents [fol. 3289] which contain material or evidence which is merely repetitious or cumulative in light of other documents, and which will not be offered in evidence.
3. Documents which are neither marked "all" or "out". These documents are also included in the attached lists and are sidelined or underlined to indicate the

principal portions thereof which the Government deems important.

. . . . . .

Dated: New York, New York, April 14, 1961.

John D. Swartz, Attorney, Department of Justice.

William J. Elkins, Edward F. Corcoran, Les J. Weinstein, James J. Farrell, Jr., Attorneys, Department of Justice.

. . . . . .

[fols. 3290-3301] PLAINTIFF'S STATEMENT SETTING FORTH THE SIGNIFICANCE OF DOCUMENTS TO BE OFFERED INTO EVIDENCE.

V-50-52

To show there was no certainty that broad claims would issue on patents covering machine carried multi-cam machines.

. . . . . .

[fols. 3302-3304] P-203

To show that the Tariff Commission Proceeding was directed primarily at imports from Japan.

G-154; G-155; G-157; G-156; & P-223

To show that the Singer proceeding before the Tariff Commission was for the conspiratorial purpose of barring imports from Japan and that other imports were not the subject of the conspiracy.

. . . . . .

[fol. 3304a-3310] acknowledgment of service (omitted in printing)

[fols. 3311-3322] IN UNITED STATES DISTRICT COURT,
SOUTHERN DISTRICT OF NEW YORK

Civil Action No. 154-108

UNITED STATES OF AMERICA, Plaintiff,

v.

THE SINGER MANUFACTURING COMPANY, Defendant

PLAINTIFF'S TRIAL BRIEF—April 24, 1961

* * * * * * *

[fol. 3323] A written agreement [Exh. S-2] resulted from these negotiations which was executed on November 17, 1955. This agreement provided for cross-licensing on the machines of each other. It also provided that neither would oppose the patents or patent applications of the other and that pending oppositions would be withdrawn or settled "in the spirit of this agreement", thereby facilitating the allowance in all countries of claims as broad as possible. Thus, the arrangement referred to by Lightner, "which would greatly strengthen and broaden the patent situation" of the two, had been accomplished.

* * * * * * *

[fols. 3324-3384] Singer proceeded to arrange for negotiations with Gegauf for the purpose of obtaining an agreement similar to that of "Singer-Vigorelli" and "Vigorelli-Gegauf", which agreement would complete the triangular arrangement.

* * * * * * *

[fol. 1] IN UNITED STATES DISTRICT COURT, SOUTHERN DISTRICT OF NEW YORK

Civ. 154-108

UNITED STATES OF AMERICA, Plaintiff,

v.

THE SINGER MANUFACTURING COMPANY, Defendant

Transcript of hearing—New York, May 2, 1961, 10:30 A.M.

Before: Hon. Sylvester J. Ryan, District Judge.

APPEARANCES:

Antitrust Division, United States Department of Justice, For the Government: William J. Elkins, Esq., Les J. Weinstein, Esq., Edward F. Corcoran, Esq., and James J. Farrell, Jr., Esq., Attorneys, Department of Justice.

Winthrop, Stimson, Putnam & Roberts, Esqs., Attorneys for Defendant; Allen T. Klots, Esq., Arthur E. Pettit, Esq., Edwin J. Wesely, Esq., Terence H. Benbow, Esq., Neil F. Twomey, Esq., Edward A. Miller, Esq., and Richard J. Riker, Esq., of Counsel.

* * * * * * * *

[fol. 2] OPENING STATEMENT ON BEHALF OF GOVERNMENT BY MR. ELKINS

Mr. Elkins:

* * * * * * * *

Generally speaking, there are two classes of such machines: a straight stitch machine which does not more than [fol. 3-4] sew a straight stitch, and the zigzag machine. The zigzag machines have three principle types: the manually operated machine, the replaceable cam machine and the machine carried multi-cam machine. These machines, as well as sewing a straight stitch are capable of producing a zigzag stitch, a decorative stitch, an ornamental stitch.

The manually operated machine requires on the part of the operator some dexterity and some skill in order to produce such a stitch. With the replaceable cam machine and the machine carried multi-cam machine, that stitch is produced automatically by the use of cams. These cams have varying configurations on their surface, and it is these configurations which determine the stitch pattern.

The intelligence of the cam, as it is called, is taken from the surface of the cam by a cam follower, and the cam follower as it rides on the surfaces of the cam imparts a predetermined motion to the sewing machine needle to produce the stitch.

. . . . . .

[fol. 5-6] It appears, your Honor, that the principal factual dispute that is presented here is as to whether or not any conspiracy or any agreement between the parties other than written agreements existed at all. We, of course, contend that there was a conspiracy and an unlawful conspiracy, and we intend to show the substance of it and its various terms.

The Court: Do you depend for proof of this alleged conspiracy solely upon written documents?

Mr. Elkins: That is true, your Honor.

. . . . . .

[fol. 7-8] Mr. Elkins:

. . . . . .

As a background to the conspiracy, your Honor, which is essential, we will show that at the time of its formation Singer had pending in the United States three patent applications relating to the multi-cam machine. Two of these, the Perla application and the Johnson application, resulted from its own research. There was still another, the third, referred to as the Harris Reissue application.

We will show that at this time Gegauf had pending in the United States one patent application which, however, contained two separate inventions and inventions that were so distinctive that they were required actually to take one out of that application and to make it the subject of a separate

application. So that, in effect, at the time Gegauf had two pending United States applications and Vigorelli, the other co-conspirator that we mentioned, had one.

. . . . . .

[fol. 9-10] The Court: Do I understand, then, that the charge of the government is that it was the object of the conspiracy to assert solely United States patents as affecting foreign imports?

Mr. Elkins: That, your Honor, is true.

. . . . . .

[fol. 11] Mr. Elkins: All right, your Honor.

As well as charging a conspiracy in violation of Sections 1 and 2 of the Sherman Act, that is, a conspiracy to restrain and to monopolize the trade and commerce in the multi-cam machines, we also charge that Singer attempted to monopolize the manufacture, sale and distribution of the multi-cam machine in the United States.

The substance of the conspiracy and the attempt involved these patents and the patent applications and the conspiratorial use of them to limit or to exclude competition from multi-cam machines that were produced in Japan.

We will show, your Honor, that the negotiations between the defendant and Gegauf relating to their respective patent rights included five distinct phases, and by a phase we do [fol. 12] not mean a session, we mean phases which were distinct from each other, and that in all five phases of these negotiations the express motivating influence, the specific purpose of sitting down and negotiating at all in relation to these patent rights was to combine patent strength in order to facilitate and to make possible formidable attacks against persons, United States importers, United States dealers, who were dealing in the Japanese-made machine, and we will show that the negotiations did result in such an agreement.

The principal phase of the conspiracy or facet of the conspiracy was that Gegauf of Switzerland would assign his United States patent applications to Singer so that Singer could use such patents either alone or in conjunction with other patents that Singer owned or expected to

own and control in proceeding against persons who did deal in the Japanese products.

Involved in this assignment were actually, as I stated a moment ago, two patents or two patent applications. Both of them were very basic to the multi-cam machine. One involved a plurality of cams with a single cam follower that was capable of engaging any one of the cams in order to impart a particular motion to the needle to produce a stitch pattern, and this other application related to a plu- [fol. 13] rality of cams, each one of which had its own follower, with a mechanism whereby the particular follower would engage its particular cam and impart the stitch pattern to the needle.

. . . . . .

[fol. 14] The Court: All right. The government does not question the validity of any of these patents that issued in and of themselves and absent this alleged conspiracy, does it?

Mr. Elkins: No, it does not, your Honor.

. . . . . .

[fol. 15] We will also undertake to show that one facet or idea of the conspiracy was that Gegauf would assign his applications to Singer so that Singer then, having ownership of it, could use it before the United States [fols. 16-21] Tariff Commission in a special proceeding, a proceeding that would not have been feasible had Gegauf not assigned his patent applications to Singer.

. . . . . .

[fol. 22] Although that proceeding before the Tariff Commission was on its face directed against all imports of the multi-cam machine covered by that patent, we will show that [fol. 23] actually it was directed against imports from Japan.

. . . . . .

The Court: Was there any other American manufacturer producing this type of machine during this period of time?

Mr. Elkins: No, your Honor.

The Court: Do you charge that that was the result of any unlawful act of Singer's?

Mr. Elkins: We do not, your Honor.

The Court: All right. What happened to the other American machine manufacturers? I recall a number of them.

[fols. 24-25] Mr. Elkins: Many of them, your Honor—and I am tempted to go on but I haven't any evidence on it, as to why they are no longer manufacturers——

The Court: But you do not charge that they were forced out of business by any unlawful act of Singer's, do you?

Mr. Elkins: No, your Honor, we do not.

The Court: All right, that is sufficient.

Mr. Elkins: However, we do charge an attempt by Singer to monopolize the manufacture, sale and distribution of the multi-cam machines in the United States and as to that we will rely upon the conspiracy as we have described it——

. . . . . .

[fols. 26-27] Mr. Elkins:

. . . . . .

Also in relation to the attempt, we will introduce evidence as to patent negotiations between Singer and Messerschmidt, which is a German sewing machine company. Also, your Honor, inasmuch as an attempt——

The Court: What does this Messerschmidt transaction have to do with the charge made about the unlawfully acquired Geganf patents against Japanese importations? What does that have to do with it?

. . . . . .

[fols. 28-29] Mr. Elkins: We do not allege any crime or any offense involving Messerschmidt and Singer.

. . . . . .

[fol. 30] Now in relation to an attempt, your Honor, it is a necessary element to show a specific intent—an intent

which differs as a matter of substantive law from a general intent. We have an intent frequently described by the courts as "They intended the natural consequences of their acts" and so forth.

. . . . . .

Mr. Elkins: All that I wanted to say, your Honor, was that the attempt under the law—an attempt to monopolize [fol. 31] requires a specific intent. We intend to show that specific intent. We intend to do it through documents which relate to the Singer state of mind and the Singer purpose in acquiring patents.

. . . . . .

OPENING STATEMENT ON BEHALF OF DEFENDANT BY MR. PETTIT

Mr. Pettit: I would normally wish to give some of the [fol. 32] background and tell your Honor something about the machines, but I have decided I would rather for the moment go directly to the heart of the plaintiff's case. Theirs, as I understand it—and they have to stand or fall on it—is that Singer acquired patents for the purpose, for the express purpose, for the sole purpose of using them against the Japanese. They made a boycott theory—and unless they can tie it down, not only that they were going to be used against the Japanese but they were not going to be used against the Europeans—and all the way through their documents you will notice in the address to you that it was always directed directly at the Japanese.

Now to clarify our position, I will say that a patent gives only the right to exclude—the government has so stated in its brief. It can exclude others in order to obtain exclusive manufacture to the owner, and it can be used to exclude some and collect royalties from others.

Now Singer acquired the Gegauf No. 1 patent in order to exclude. We do not need to have any debate or argument on that.

We have a manufacturing plant. We had invented and developed the very machine that the Gegauf patent No. 1 [fol. 33] covers—and I will go into the history of that later. But Singer needed it for the purpose of enforcement.

Now the question is, who was to be excluded? As I say, the government's theory was that it was the Japanese and the Japanese only—and if there is a scintilla of evidence that that isn't true—if the answer is that they wanted to exclude everybody, as I understand it, the government's case just falls.

The Court: Not necessarily so. If in the attempt to exclude everybody the Japanese manufacturers were included——

Mr. Pettit: There is no question but that the Japanese were——

The Court: Let me see if I understand the statement that you just made.

Does the defendant concede that it acquired the Gegauf No. 1 United States patent for a purpose of asserting it against importations which infringe?

Mr. Pettit: Absolutely. That we wanted it for that purpose, acquired it for that purpose and have been using it for that purpose.

The Court: Then this question I would direct to both of you. What then is the factual issue presented in this [fol. 34] case? It seems to me to be a question of law.

Mr. Pettit: There is this, your Honor. They have a boycott theory in which they say you make a contract or a purchase which is legal. If you wanted to use it against a particular person, then it becomes illegal. Now they struggle all the way through this case to negate the idea that Singer purchased the patent to use it against everybody. You will notice that they use various techniques and various incidents to show that Singer really didn't want to exclude the Europeans.

[fol. 35] On that issue I think we can just stand on Mr. Lightner's declaration which he prepared when Mr. Stanford was going to Europe in order to try to purchase this patent. He wrote a memorandum for the express purpose of guiding Mr. Stanford and for the express purpose of getting the viewpoint of fellow officers in the company.

The Court: Is this document that you are now quoting from marked in the pre-trial order by any number?

Mr. Pettit: It is set forth fully in the statement of facts and it also has a pre-trial exhibit number, but I don't know the number.

I find that it is paragraph 80 of the mimeograph statement of facts.

Over on page 42, the last full paragraph, Mr. Lightner is discussing a proposition as to whether we should, in order to get this patent, make an arrangement with Gegauf with respect to the purchase of some machines from him. He says:

"In determining whether to broach this idea in the course of negotiations, it must be remembered that getting control of the patent is the main objective, with the elimination or curtailment of European import as an important but secondary objective."

[fol. 36] Now, the government would read out the exclusion of European machines as an important objective. Secondary becomes a word that means nothing. I think that in warfare it is generally conceded that winning the war is the primary objective. Winning a battle may not be the primary objective but it may be very important. Therefore, an indication that something is of secondary importance does not mean that it is not of great importance and that it is not an objective. As a matter of fact, Secondary means next in importance to that that is first in importance. This philosophy shown there, of a desire and even of the importance of excluding the European imports, is shown through these documents in various instances.

The government would negate that by virtue of the fact that in talking of these problems negotiators talked rather normally. I don't see how it is possible, when the Japanese are the main and the primary infringers and the ones that are pouring the infringing machines into the country, that anyone could fail to talk in terms of the facts, and there is no question that Gegauf particularly talked at times about the dangers coming from the imports of the Japanese machines.

[fol. 37] But I submit that you could not expect negotiators to go around talking in terms of saying "It is my hope and expectation that suits will be brought against each and every infringer, including every manufacturer, dealer and seller, whatever the source of his supply and whatever the origin of the country of the infringing machine."

Negotiators just cannot and do not talk in those terms when they are confronted with a primary danger.

Singer wanted to buy this patent, wanted it for its own to use as it saw fit. We will show you that in one of the letters relating to the proposed assignment of the patent it was pointed out that it is much better to buy it, not to pay any royalties, so it would be completely free of any further dealing with Gegauf. We bought it so that we could be completely free and use it in a way that Singer wanted to use it in its best interests.

Singer did use it that way. Singer had no agreements whatever as to licensing or not licensing. It had no agreements whatever as to bringing a suit or not bringing a suit. It did declare that it wanted it. It argued with Gegauf that as a matter of fact it was in Gegauf's interest to do so, but that was an argument as to why Singer wanted it, one of the [fol. 38] reasons that Gegauf should sell it. But it is not any conspiracy. When Singer says that we can enforce this patent and we want to be in a position where we can do it, it is merely talking the facts of life. It could enforce it, it wanted to enforce it, and it needed to enforce it in its own business.

Now, the fact that Gegauf might get some incidental benefit from that seems to me to be quite immaterial. Gegauf knew exactly where he stood, and one of the arguments that he used was that "If you get this and use it in the way that you plan, the first thing that will happen to me is that a lot of Japanese machines will be flooding into Europe." That shows that he was interested in Europe; he was not interested in the United States nearly to the extent that he was in Europe. The government tries to make something out of this, and I don't know why. This, again, is just normal talk.

When Singer wanted to buy the patent, their answer to that was "The Japanese are going to be here anyway," and the net result was that by paying $90,000 and by making no side agreement of any shape, form or description, they acquired this patent for the purpose and with the intention of enforcing it. But it is crystal clear, not only by the [fol. 39] documents that are in the files but by their actions

afterwards, that they wanted it to enforce it against everybody, as any normal owner of a patent would.

They brought an action before the Tariff Commission, an action, by the way, that was never mentioned or thought of before the purchase of this patent. There is not a scintilla of evidence in this whole record that the Tariff Commission proceeding was mentioned at any time, because it was not, and it was not even thought of until about five months after they got the patent. They brought the Tariff Commission action for the purpose of excluding all machines, European as well as others.

The government contends that this is not true for several reasons. They cite that potential adversaries in that proceeding came to Singer and wanted to make some arrangements for licensing and that Singer told them quite normally, I think at least two of them, they could not talk and they were not in a position to talk at this time about any possible licensing. The reason they couldn't talk at this time was that they had to wait to see what happened with the Tariff Commission proceeding before they would know whether they wanted to enter into any agreement with [fol. 40] them. If the Tariff Commission proceeding ended in an adverse decision, then Singer would consider what would be done at that time, and if the Tariff Commission gave an order favorable, there wouldn't have been the slightest possibility of any license to any of these people. And there is a very good reason for that, your Honor.

* * * * * * *

The Court: As I understand it, when Singer acquired, by assignment, the Gegauf United States patents, it granted back a royalty-free license to Gegauf——

Mr. Pettit: That is correct.

The Court: And to—was it Vigorelli?

Mr. Pettit: Vigorelli.

The Court: Did it grant back a royalty-free license to anyone else other than to Gegauf and to Vigorelli?

Mr. Pettit: I forget which one. Whether this one gave [fol. 41] it or the early one I have forgotten, but I believe that it is this agreement that gave Gegauf the right to license two people. In the arrangements in which this was purchased it was either expressly provided there—

yes, it was expressly provided, that's right, that Gegauf could let Pfaff and Vigorelli bring in machines. In other words, Singer could not sue them if Gegauf gave them the right to bring them in. It was not a license to Pfaff and it was not a license to Vigorelli. It was a license to Gegauf under which he could let Pfaff import, if he saw fit to do so.

The Court: He could grant a sub-license.

Mr. Pettit: Yes. The Vigorelli one was utterly unimportant because Vigorelli had a license from us under our cross-license agreement. It didn't make any difference to us whether it was in there or not. Vigorelli had the right whether it was in the agreement or not because we had made the earlier cross-license agreement with Vigorelli which protected him no matter what patents were acquired later. He had a right to sell his machine. So the right to sub-license Vigorelli was meaningless. The right to sub-license Pfaff could have resulted in machines coming in on Gegauf's say-so, not on ours.

The Court: What prompted Singer to give this grant-[fol. 42] back of a royalty-free license with permission to sub-license at the time it acquired the assignment of the basic United States patent.

Mr. Pettit: It had no choice. Gegauf would not sell it to us except on that condition. Gegauf was selling machines, and it is quite logical that Gegauf would want a license because he was selling his machines in the United States and that was simply one of the terms and conditions. Another one of them was that he wanted to be in a position to let Pfaff bring them in if he saw fit.

The answer is he never did give that license. The government's brief says to the contrary. There is an affidavit in the file, right from the very documents on which he is relying, an affidavit signed by Gegauf, that he had never granted any license to Pfaff.

Another thing that they used to try to show that an action which in fact seeks to stop all imports of Europeans was not in fact that is that Mr. Gegauf consented to a change of our agreement. Before the Tariff Commission it was very important that the company not have a lot of licenses outstanding. As you know, the Tariff Commission is not a royalty collection agency, and if it feels that an action

[fol. 43] is being brought where people are not paying royalties, and by someone who merely wants to enforce the patent, they would throw it right out. Its first interest is: are there licenses outstanding or are licenses going to be granted.

For business reasons Singer granted a license to Sears, a company that does over $12,000,000 worth of business a year with it. It wanted to, and even when it granted that license it knew that that grant in itself might imperil its position before the United States Tariff Commission. It was very anxious to eliminate the belief that there would be any further licenses.

Singer, therefore, wrote to Gegauf and asked if he would eliminate the provision about Pfaff. The government says, "Without any further consideration except the helping of this cause, Gegauf consented." Well, now, the fact is that Gegauf held us up, and he did have some other considerations. He said he was ready in principle but he would do so only if we executed an agreement indemnifying him from possible liability on a contract that he made with somebody else some time before. So his consideration was quite definite. He was thinking of himself, as usual and as is right. He gave his consent only on an indemnification agreement from Singer relating to another matter, a license that he [fol. 44] granted and which he said applied to German patents only, and Singer had to give him that indemnification.

So, if anything, it shows complete arm's length dealing, and furthermore it is immaterial in any event. I cannot see why Gegauf's being willing to aid us affects this situation in the slightest.

I would like to call your attention to the machines that are involved in this litigation. The government doesn't mention any of the circumstances or any of the reasons why Singer wanted to buy this Gegauf No. 1 patent. The fact of the matter is that Singer had developed a machine that is called the Singer 401 machine, and it is right up here on this stand. It developed, itself, every single feature in that machine, and it was a brand new machine.

Mr. Elkins says that the company didn't produce this until 1956, but the answer is that long before that, even commencing back in 1953, Singer had committed itself and

its future to this machine. It had done the development work, it had invested money in it, and it was quite clear that it was developing not only that machine but, while that was being developed, it was developing other machines in the zigzag field.

Therefore Singer just was not a newcomer into the field [fol. 45] in 1956 by any means. Singer had already started on the road that required that it be able to sell the 401 machine and the Singer 319 machine.

The Court: Which is the 319 machine? The 401 machine is the second machine there, I see.

Mr. Pettit: The 401 is right here (indicating), and the 319 is this one right here (indicating). The difference between them, your Honor, is the difference explained by Mr. Elkins. He referred to two separate and distinct patents that had to be separated out of the Gegauf application. The idea, the difference between the two, is that in one instance you have a cam follower for each one of the cams in the machine. They both involve the idea of a stack of cams and a follower that can be engaged with any one of that stack of cams and for the purpose of transmitting the information. The 401 had a single follower that could be moved from cam to cam. The 319 has the same stack of cams but with a separate follower for each cam.

Now, those two ideas were in the Gegauf U.S. application. In most countries they would stay in that same application. They are very strict here, and there was also a difficulty of an over-reaching by trying to get a phraseology [fol. 46] that would cover both without covering too much of the field. The net result was that in this country it was separated into two separate patents, but the single idea involved was the stack of cams, a means for taking information from one of those cams to the needle. In each instance you have the same situation; you can have the same number of cams; you can choose your cam and use that information.

The one that Singer was primarily interested in, of course, was the 401. It did insist on the other application coming along with the first application, the one that covered 401. It did that not for the reason that Mr. Elkins thinks. There are many times things behind the scenes that you don't see unless you know the background. The reason

the 319 application, the application covering 319, was wanted was not so much to cover the 319 machine, because in fact the manufacture and sale of the 319 machine in the United States had actually been discontinued. It was a terrific seller abroad and continues to be sold abroad, but in the United States that machine was discontinued in 1957. However, Singer needed the application for a purpose that he would never dream of.

Some nine months before, Singer had made a cross-license agreement with Messerschmidt. Messerschmidt had pat-
[fol. 47] ents abroad in many countries that would cover the 319 machine. The 319 machine abroad was the star machine for the company. Singer gave Messerschmidt, in return for getting the right to sell its 319 machine in all countries abroad where Messerschmidt had patents, and they were numerous, a license under its Perla application which covered the same machine.

In that situation it was quite essential that Singer purchase the Gegauf patent for the simple reason that Gegauf No. 2, covering the 319 machine, would come ahead of Perla and it would have left Gegauf power to exclude Messerschmidt from the United States.

The Court: How did Gegauf No. 2 come ahead of Perla?

Mr. Pettit: Because its priority date was first. Once the patent was issued, when they got into conflict the Perla one was gone and taken out.

The Court: And they covered the same inventions?

Mr. Pettit: Absolutely; read precisely.

The Court: Is it your contention that the Perla 1954 patent covered the Gegauf No. 2 invention?

Mr. Petitt: That's right. The Gegauf No. 2 covered it.

The Court: Covered it and precluded Perla.

[fol. 48] Mr. Pettit: And precluded Perla from using that mechanism and would preclude Messerschmidt from using it.

If you read the correspondence, you will find that Singer never once told Gegauf why they wanted the second application. They used phrases that would cover it up. They said, "Well, we have been bargaining for it all along. It was part of the pie originally. When you cut a pie into several pieces, you have the same thing. We won't settle without it."

Never once was there a phrase in the entire correspondence explaining to Gegauf why Singer insisted on the inclusion of this patent, and the reason was that they felt they didn't dare tell him because, if they told him that their reason for it was to give it to Messerschmidt, they didn't think there would be the slightest chance of their getting it and they might be in considerable difficulty with Messerschmidt.

I don't know what the legal situation was and I don't know what they did, but they didn't want to take any chance on it because Messerschmidt might very well claim that we gave them no consideration at all in giving them a license under Perla when we knew that the Gegauf No. 2 was in the application and might issue and, frankly, we did not [fol. 49] want any possibility of Messerschmidt coming back at us for having given a license under Perla when Perla was going to be subordinate to Gegauf.

The Court: So it is your contention, then, that Singer acquired Gegauf No. 2 to protect the 319 machine which had been manufactured under the Perla invention or the Perla patent.

Mr. Pettit: No, it was to protect Messerschmidt's 319. We had discontinued it in the United States. Singer had actually discontinued the manufacture and sale of the 319 machine.

The Court: Were you manufacturing it abroad?

Mr. Pettit: Oh, yes, and it continued to be.

The Court: But not in the United States?

Mr. Pettit: Not in the United States. But it made it very important that our rights to sell abroad be continued in effect.

The Court: What was the purpose of Singer acquiring Gegauf No. 1?

Mr. Pettit: May I just finish this first, your Honor?

The Court: Yes.

Mr. Pettit: Just one idea on this before I leave it. No [fol. 50] action has ever been brought on Gegauf No. 2, no threat of prosecution, no attempt to enforce it. No notices have been sent out. In other words, I think all of that is confirmatory of the fact that that was not bought to enforce; it was bought to protect our right to sell our machines

abroad by protecting a right we had given to Messerschmidt.

I know what Mr. Elkins would say, of course. He would say we made a license to Sears. Well, that is a story unto itself, and I think I might as well handle it right now.

Sears does business in Canada and in the United States. Singer had the Gegauf No. 1 patent in Canada and in the United States. Sears was willing to pay a license on machines sold in the United States. It, quite obviously, did not want to pay a license on machines sold in Canada.

It took the position, and this you can find by just reading the correspondence, and I think, obviously, for this purpose alone, that the machine it was making and that it wanted to get a license from Singer for was covered by what was then a pending application covering the 319 machine. Singer told them that the machine they were importing did not [fol. 51] violate the 319 machine and would not violate any patent that came from under it but told them quite definitely it violated the Gegauf No. 1, and it took that position throughout the entire negotiations.

What had happened was that, in order to get around Gegauf No. 1, Sears had had injected a perfectly useless piece of mechanism in order to say that it did not violate Gegauf No. 1. It was not functional. It was of no purpose at all. It would just add something in between the follower and the cam.

Mr. Stanford said that that did not in any respect avoid Gegauf No. 1, but Sears insisted that it wanted the license under the Gegauf No. 2 and wanted to say that its machine was not covered by 1, and, because Sears insisted that a license be given to it, a license was drawn covering both patents, and you will find out that to protect itself Sears made a payment on account of past infringements which it wouldn't need to have made because the application on the 319 had not reached the issue stage yet. It owed no royalties for machines that would violate only the 319 patent, but it put in a provision to cover it against the Gegauf No. 1 patent.

Therefore I think it is quite fallacious to say that Singer [fol. 52] used the application in order to license it. It was forced to do so against its will, against its judgment,

and with the flat statement at all times that the machine being covered did not violate Gegauf No. 2.

Now, with that one exception the Gegauf No. 2 patent has never been used, exploited or in any way used to threaten any single person, and that one was done because we had to at their insistence.

You asked why Singer purchased Gegauf No. 1. Singer had developed this machine from top to bottom as a brand new machine. It had already obtained a license, no question about that. It could have sold it without obtaining any further license. It bought the Gegauf No. 1 application for one purpose and one purpose only, to be in the position of the owner of a patent which it could use to exclude machines that were identical with the 401 machine.

It did that, I think quite properly because it invented the machine from top to bottom, and it was beaten only by nine days. It acquired the Harris patent in order to try to get it reissued with claims that would cover the 401, which it did, and then found later, quite some time later, that the [fol. 52a] Gegauf application was ahead of it by nine days. That put it in a position where, if it was going to have exclusivity for its particular machine, it had to have Gegauf No. 1, the patent covering it.

[fol. 53] There is talk about a lot of other patents. Your Honor, the other patents don't amount to a thing. The Gegauf No. 1 patent is all that amounts to anything to the Japanese, it is all that amounts to anything to Singer, and it is all that amounts to anything as far as commerce in this country is concerned. The fundamental concept involved in the 401 is the stack of cams with the single follower. It is so limited that it has to be a stack with the follower moving lengthwise to the common axis of the stack, it has to be retractable, and it has to be retractable by means of a mechanism on the outside such as a dial or handle. Every one of those elements must be present before Gegauf No. 1 is violated, plus many others. We go right down a list of about 17 or 18 elements.

The other patents cover nothing except items that are at most improvements or variations on that same theme, all of which were invented by Singer and all of which were included in the 401 machine. They, if applied, would have

kept out only a total—well, in the year 1957 they wouldn't have kept out a single machine, in the year 1958 all of [fol. 54] them put together wouldn't have kept out more than 249 machines, and in 1959 all of them put together would have kept out only 1485 machines. This is excluding machines that the Gegauf No. 1 patent will cover. If you exclude those, there are only 1734 machines in three years that these other patents would cover, and they are rather freakish. They use a combination that is quite unusual and not often used. In fact, only 685 machines of one type were brought in that violated it.

Therefore, these patents, these other patents, are just camouflage. The battle here, and the sole battle here and the sole battle that the Japanese instigated, is the Gegauf No. 1.

The Harris patent, for instance. The Harris patent reads directly, and you will remember we showed you a chart once, line for line on Gegauf No. 1, and it is only surplusage, very minor items of surplusage, that is left in the Harris patent. They are items that, if we enforce the Harris patent, would not keep out any Japanese machine; it would merely make them change one minor mechanism that we don't use. We had the Harris patent for six months and never brought any action on it.

On the Johnson patent, it has nothing in the world ex- [fol. 55] cept the addition of a second follower, related very much to the idea of the single follower. If you will look in the machine, you will find the stack of cams and it has two followers, one of which can be immobilized. So, in effect, it is a single-follower machine with a second follower added to it. Every other invention that is in the Johnson patent is a minor variation of this very mechanism that he invented and used and we incorporated in the Singer 401 machine. There is not a patent that we have that covers the subject matter that is not used in that machine, and as I say, those outside of the 401 would have covered a total of only 1734 machines that the Gegauf No. 1 wouldn't have handled itself.

The Court: Why did you acquire the Vigorelli patent?

Mr. Pettit: We didn't acquire the Vigorelli patent.

The Court: Didn't you acquire a license or a royalty-free license to use it?

Mr. Pettit: We made a license, cross-license agreement with Vigorelli, it was the first one that was made, back in 1955. That was done because Vigorelli was the first machine [fol. 56] that Singer saw that embodied the idea that was involved in the 401 machine.

In October 1953 Singer saw this Vigorelli machine. It immediately realized that the invention date of Vigorelli had to be ahead of the invention date of Johnson, so much so that when Johnson filed an application he could not put in it a claim for what he had invented because he knew that he could not say what he needed to say in order to support the claim. It was just perfectly apparent, by the sale of the machine in the United States, that the inception date of Vigorelli would be ahead of Singer.

Singer wanted to free the machine, and Singer had Vigorelli beaten in certain countries. Therefore, for the purpose of freeing their machines both in the United States and abroad, Singer entered into the cross-licence agreement with Vigorelli, which was the first one of these cross-license agreements, and that was purely an opening of the markets both for Vigorelli and for Singer.

The same thing happened then for Gegauf. In the negotiations, just before they were going to be concluded with Vigorelli, Singer learned that Gegauf too would have some claims in this field. It didn't know the date but it knew [fol. 57] that there would be some claims there. It had heard that Vigorelli had made an agreement with Gegauf or was engaged in it.

Due to the fact that Singer later asked Vigorelli what patents Vigorelli had cited to Gegauf in order to induce Gegauf to make a cross-license with him, and that was the question and no other question, the Government says we questioned them about the terms of their agreement or various things about the agreement. Vigorelli was asked one question, and without even knowing why it was wanted: what patents if any did you cite to Gegauf? And he told us, and on the basis of his telling us that they brought him in as of that stage and refer all the way through to the assistance of Vigorelli.

That Vigorelli agreement was an absolutely essential agreement if Singer was to be able to sell its 401 machine and not be impeded. Incidentally, I might say that Singer

wrote letters to Europe—France, Germany, Italy, it wrote to Japan—we have these documents among the documents that will be offered—in which it was doing everything it could to find whether there was any means of destroying or limiting these patents, and I think it is perfectly apparent that they found not a single publication and place in the [fol. 58] world that would let them hope or believe that they could limit any patent application in any country that covered a stack of cams, a cam follower that moved lengthwise to the axis of the cams, and it was because they became convinced that these patents, if acquired, could not possibly be beaten and because, if they were acquired, they could stop Singer in various countries of the world, that it frantically—and you will notice the correspondence—went to work to get cross-licenses that would free those markets to it. The idea that there was any conception of a purchase at that time I think becomes ridiculous upon reading the documents.

Now, Gegauf was in exactly the same situation, only the countries were exchanged. In the United States it was apparent to us that Gegauf would be ahead in the United States whereas we would be ahead in foreign countries with the Harris patent. We made a cross-licence agreement with Gegauf, again for the purpose of opening the market and for no other purpose, and, your Honor, I have a chart here that I hope to have a smaller one made of so that you may have it. The time element between these various conferences is quite important. You will notice that in 1955 [fol. 59] the first one was the Harris patent purchase, then the Vigorelli agreement here, each of these being a month, and you will find that there is a considerable time gap between many of these transactions, and not one of these things can be covered, pushed up into a whole single effort. On the contrary, when you come to Gegauf's possible purchase, you will find that there is a gap of over a year between the time that Gegauf absolutely refused to sell his application to Singer and the time that it was taken up a year later, at which time they again failed for a short time and had to go back in December.

So the government would push these all together, make it look as if they all came along, which is far from correct, first close one and then start another one.

Messerschmidt was in exactly the same situation. Messerschmidt had patents all over the world that would have foreclosed the 319 machine. We had a patent, the Perla one, that would beat Messerschmidt in the United States. We exchanged licenses, cross-licenses with Messerschmidt.

You ask what it has to do with it. I really don't know. It [fol. 60] is quite foreign to this. Messerschmidt had three different stages. One was a cross-license, the next one was an assignment of their application in the United States that related to the subject matter of the cross-license. That subject matter, as I have mentioned, was covered by the Perla patent, and we had Messerschmidt beaten.

Therefore there was nothing in that application that was of any use to Singer. All that was in that application that we purchased, the one relating to the United States, was an idea involving a feed mechanism, use of cams to control a feed mechanism. Neither party thought that there was much chance of getting a patent on it, but Messerschmidt itself suggested, not Singer, that it would give the patent application to Singer if Singer would just prosecute it and try to get a patent on it and give it a license. Singer took it, did try to prosecute it, and every claim has been finally rejected by the Patent Office, and those rejections will expire on the 4th of this month.

Therefore, what that application has to do with this, I don't know. It was a feed dog, a mechanism that Singer was interested in. It didn't have it incorporated in any machine at the time, but you don't wait until you get your [fol. 61] mechanism going before you buy your patent unless you have to. They had experimented with it before, they have experimented with it later, and they have even taken a license with reference to one later. But what that has to do with this, I don't know.

The only other thing involved with Messerschmidt is that Singer sought to purchase foreign patents. As I say, Messerschmidt had these foreign patents. Every one of them would affect Singer. Singer sought to purchase them. I have no question in the world but that they sought to purchase them in order to enforce them and protect their sales in the countries where those patents existed. That was all

foreign, had nothing to do with the United States, and I don't see how they have any place in this proceeding.

* * * * * * *

[fol. 62] Mr. Pettit: He refers to the fact that the manual machines require dexterity. I will say that every sewing machine requires dextority. There isn't anyone who can operate a sewing machine, straight stitch or any other kind, who does not have some degree of dexterity and skill with it, and I think there is nothing involved in the point that one little cam will automatically make one little stitch. Using any of these machines, there is still required a tremendous amount of skill and dexterity.

The Court: I suppose he intended to bring to the Court's attention that there was a greater degree of foolprofness, if there is such a term, in the machine.

Mr. Pettit: That is only in relation to one particular stitch [fol. 62a] that is being made. I mean, one stitch would be taken off a cam, that's all. They still require a great deal of skill: how to set it, how to use it, how to run the material through.

[fol. 63] Also he refers to these as separate machines always. I would like to call your attention to the fact that there really isn't such a thing as a separate machine involved in any of these. You have to use language sometimes in order to refer to something, and yet that very language may create a wrong impression.

I have lined up here (indicating) the pieces of mechanism that go into these very sewing machines. Every one of them is fundamentally a sewing machine. Every one of them sews a straight stitch. Every one of them is used 90 per cent of the time or more by a woman who buys one on straight stitch work. These aren't different machines even. They just have different mechanisms inserted in them.

The Court: Well, they have extra attachments—I do not question that—which make them more appealing to the market.

Mr. Pettit: The straight stitch machine has attachments, too. You can get a zigzag attachment for the straight stitch machines which will make it go zigzag.

Here is an attachment that goes with a straight stitching machine (indicating).

Here is a skeleton photograph that just shows portions [fol. 64] in it which are marked in color, which distinguish it from the straight stitch—just the colored portion has to do with the mechanism that makes the zigzag stitch. What you have is a sewing machine with this mechanism in it.

I do not deny that that mechanism performs a certain function. What I am talking about, though, we should not get an idea that we have a different kind of animal here.

The Court: You may have an automobile but instead of getting out the old hand crank and breaking your wrist, you step on a button. You have an electric starter.

Mr. Pettit: Yes.

The Court: But essentially Singer represents these as different machines to the market, doesn't it?

Mr. Pettit: It uses phrases—you cannot help it. It has to say something that represents it as a zigzag machine, but fundamentally every one of these does the straight stitch sewing machine work that is used and done 90 per cent of the time even with these machines.

. . . . . .

[fol. 65] Mr. Pettit:

. . . . . .

I do not think we should get a picture here of the big Singer Sewing Machine Company and a picture of a small Japanese person. If there is a dominant organization that is run by itself in any respect, it is the gigantic cartel controlled from top to bottom—even as to the machines that can be manufactured, what machines may be [fols. 66-67] sent out of the country, what prices they can be sent out at—and even who in the country can manufacture it—there is no greater or more complete cartel in the entire world than the Japanese control over the sewing machine industry, which is the third largest industry in the Japanese empire. It is the Japanese who are dominant throughout the world.

. . . . . .

[fol. 68] UNITED STATES OF AMERICA

vs.

THE SINGER MANUFACTURING COMPANY

New York, May 3, 1961, 10:30 A.M.

Present: William J. Elkins, Esq., Les J. Weinstein, Esq., Edward F. Corcoran, Esq., James J. Farrell, Jr., Esq., Allen T. Klots, Esq., Arthur E. Pettit, Esq., Edwin J. Wesely, Esq., Terence H. Benbow, Esq., Neil F. Twomey, Esq., Edward A. Miller, Esq., Richard J. Riker, Esq.

Mr. Pettit: Your Honor, may I make what I consider just one minor correction in what I said yesterday? I just want to be technically correct. I think the spirit of it is exactly the same, but I did say that the sales of the 319 machine had been discontinued, and what I meant to say and should have said was that it was in the process of being discontinued. In other words, we were not going to sell anything more than those that we had on hand, as shown by the drop from 31,000 in 1957 to approximately 4,000 in 1958, 1,000 [fol. 69] in 1959 and none in 1960. It doesn't alter what I was saying, but it does correct the record as to whether they had actually been discontinued.

The Court: Is that the same machine you said was being marketed abroad?

Mr. Pettit: And is still being marketed abroad.

The Court: And when you speak of its sale being discontinued, you mean that its sale is being discontinued within the territory of the United States?

Mr. Pettit: That is correct, sir.

The Court: All right. But you contemplate continuing to market it abroad and in foreign markets.

Mr. Pettit: And we still are.

The Court: And the marketing in the foreign markets is of foreign manufacture.

. . . . . .

[fol. 70] Mr. Pettit: It is a strange thing to have to correct a hypothetical case, particularly after you had suggested that we not deal in hypothetical cases, but Mr. Elkins

did on page 23; and he said: If the patents had been issued, and had been in effect, they would have excluded the multi-cam machines and the result would have been that Singer would have had a certain percentage of the market. Then he goes on for two or three years.

That is the hypothetical suggestion that overlooks the existing fact that there are non-infringing machines and that as soon as they had a threat against them the non-infringing machines increased by 500 per cent in one year. So, if we are going into a hypothetical question as to what would have happened, we certainly have to take into consideration their demonstrated ability and determination to shift to non-infringing machines, which they can do with ease and have done, and we have a display of them and will have a display of them here.

* * * * * * * * *

[fols. 71-94] INTRODUCTION OF EVIDENCE

The Court: We will now begin the reception of evidence. The Court would like to mark in evidence as a Court exhibit the stipulation and pre-trial orders which cover a statement of stipulated facts numbered numerically 1 to 149, inclusive. We will mark these five pre-trial stipulations and orders dealing with the undisputed facts as one exhibit, and for convenience, so as not to confuse it with the other exhibits, we will call it Court's Exhibit 1.

Is that agreeable, gentlemen?

Mr. Elkins: That is agreeable, your Honor.

Mr. Pettit: That is agreeable.

(Marked Court Exhibit 1 in evidence.)

* * * * * * * * *

[fol. 95] OFFERS IN EVIDENCE OF GOVERNMENT'S EXHIBITS

The Court: All right. Next, now, is the introduction of the plaintiff's documents. Plaintiff has had the Clerk mark, in advance of the trial, each document, and defendant has done the same. We have marked for identification Plaintiff's Exhibits 1 to 198.

Suppose, to assist the Court, this list of plaintiff's exhibits

we mark as Court's Exhibit 2, simply as an aid to the Court and to counsel. Is there any objection to that?

Mr. Elkins: None, your Honor.

Mr. Pettit: No objection.

The Court: Then this is marked Court's Exhibit 2.

(Marked Court's Exhibit 2.)

The Court: Mr. Pettit, the government offers in evidence [fols. 96-100] these exhibits, which have heretofore been marked for identification. Do you have any objection to any of them whatsoever?

Mr. Pettit: Yes, your Honor, I do. Is he just offering them en masse, without making comment upon them individually?

The Court: Not at this time. I will take it that unless you assert an objection to a specific document that you have no objections to it, and the same will apply to the government when we are considering the defendant's exhibits.

* * * * * * *

[fol. 101] Mr. Pettit: The next document is Government's Exhibit 1, a letter dated October 28, 1953. This letter relates only to the 306 machine. The gentlemen at the table are quite aware of the fact that it relates only to the 306 [fol. 102] machine. We have incorporated with them paragraphs 21 and 25 of the statement of facts which show that the Vigorelli machine that was introduced into this country in October, 1953, had two different concepts in it. One of those concepts related to a mechanism that was in the 306 machine. This letter was written with reference to that mechanism and relates only to the 306 machine.

If one reads it and reads it carelessly, one can get the impression that the Singer patent department was suggesting that the idea of a stack of cams and a single follower was not patentable, was not a new idea. That is a misleading document when viewed in that light.

It has no other purpose in this record whatever. Everything about that machine is already established. The very machine itself is in this group or will be if it is not sitting right here. The very machine that was looked at will be here in the room.

A complete description of the machine is contained in the statement of fact. There is no purpose whatever that can be served by that letter other than to mislead some court as to what the defendant meant when it wrote it.

[fols. 103-108] The Court: With the word of caution that you have placed upon the record, may I assure you that the Court will bear your observations in mind when it reads this.

. . . . . .

[fol. 109] The Court: It may be material. I don't know. I am going to overrule your objection, but it will be my observation, when I read this exhibit in the light of my ruling—let us distinctly understand that 206K is the ultimate 306, and that it is a distinct machine, distinctly different from the 401—that I have well in mind.

Your objection is overruled, and you have an exception.

Mr. Pettit: Your Honor, there is a group of documents that come under the hearsay rule—and I will specify them in a moment, but I have no objection to their going in. I would like them to go in with a limitation that when there [fols. 110-113] is a report that somebody has said something, it does not establish the fact.

. . . . . .

[fol. 114] The Court: All right, I will rule on it, and I will indicate to you now that my ruling will be that they will be received in evidence as historical records, as documents of Singer maintained and kept by it in the regular conduct of its business, and that the objection to the reports or hearsay statements will go to the weight to be given to that document when it is being considered—and unless there is other evidence which lends credence to these hearsay state-[fols. 115-156] ments and shows acceptance of their veracity by Singer or by subsequent actions, they will be disregarded.

In the light of that statement by the Court, if you are going to place any specific objection on the record, you may do so.

Mr. Pettit: No, sir. With that limitation I have no objection.

Do you still want specific letters? I would like that to apply generally to any letter that contains hearsay statements.

The Court: That will apply generally. That is the only common sense rule that can be applied.

If Mr. Elkins has any objection, he will state that on the record now.

Mr. Elkins: No, your Honor, I think that you are applying the law, and if any questions come up as they might possibly at the time that we are discussing the document, I think that will be a more appropriate time to get into any intricate details.

. . . . . .

[fols. 157-159] Mr. Pettit:

. . . . . .

We will offer in evidence the exhibits marked S-11, S-17, S-18, S-20 through S-25, S-28, S-31 through S-34, S-36 through S-92, and we call your attention to the fact that we do not offer in evidence—we are perfectly ready to have it go in but we think they are useless——

The Court: Are these exhibits in addition to the 104 which have been listed?

Mr. Pettit: Yes, sir.

The Court: There being no objections to them, they are received in evidence.

. . . . . .

[fol. 160] Offers in Evidence of Defendant's Exhibits

The Court: The next order of procedure as we marked it out will be the offering in evidence of the defendant's documentary exhibits which have been numbered Defendant's Exhibits 1 to 104 for identification. The defendant now offers these in evidence. Is there any objection by the government?

Mr. Pettit: I think I have one or two that I will exclude from offering.

The Court: You are going to withdraw some?

Mr. Pettit: Yes.

The Court: All right. Which ones are you going to withdraw? And if you withdraw them, Mr. Elkins will offer them in evidence.

Mr. Pettit: I have this one series of documents which I thought would be listed, your Honor.

We will offer in evidence all of the exhibits listed contained in this batch (indicating) with the exception of 83, 88 and 98 to 104.

The Court: 83, 88 and 98 to 104.

[fol. 161] Mr. Pettit: 83 and 88 are withdrawn because of the document excluded that the government is offering. Therefore we do not need those two.

The Court: The remaining documents which have been marked as defendant's exhibits for identification are now offered in evidence. You have a list of them, have you, Mr. Elkins?

Mr. Elkins: Yes, your Honor.

The Court: So as to assist the Court, now we will mark the list that the defendant prepared of the documents it offers in evidence, and we will mark that as Court's Exhibit 3.

(Marked Court Exhibit 3.)

The Court: Does the government have any objection to any of the documents now offered in evidence by the defendant?

Mr. Elkins: Yes, your Honor.

The Court: Which documents do you object to?

Mr. Elkins: We object to Defendant's Exhibit 31.

The Court: That is described as a document dated April 15, 1956, called the Stanford memorandum.

Mr. Elkins: That is right, your Honor.

The Court: Stanford is the man who is over in Zurich, isn't he, on the Gegauf matter?

[fol. 162] Mr. Elkins: Yes, your Honor.

The Court: Why don't you want his memorandum in evidence?

Mr. Elkins: Because of the parol evidence rule, your Honor. As your Honor knows, the title of this memorandum is Bernina Agreement, and it relates to an agreement, part of which was a cross-licensing agreement as between Singer and Gegauf.

The Court: Who is Bernina? Is that Gegauf?

Mr. Elkins: Another name for Gegauf, your Honor. The contract in question is in. Its terms are clear. Its language is clear. This memorandum purports to change the clear meaning of the contract and its terms as they are set forth in an exhibit which is before your Honor, namely the contract itself.

The Court: What was Stanford's position in Singer?

Mr. Elkins: The head of the Singer Patent Department.

Mr. Pettit: Yes, sir.

The Court: Objection overruled. It will be received in evidence as being some indication of Singer's contemporaneous interpretation of the agreement. You can have [fols. 163-167] an exception to my ruling.

Next objection.

Mr. Elkins: Did I make my point clear?

The Court: I think you did, sir.

Mr. Elkins: That this contradicts the written agreement?

The Court: I think I made myself as clear as you did. I hope I did. You have an exception.

Mr. Elkins: All right, your Honor.

The Court: It is not taken in contradiction, Mr. Elkins. It is taken as a recording of Singer's interpretation, be it right or wrong.

* * * * * * *

[fols. 168-170a] The Court: Have you any objection to any more of the defendant's exhibits as offered in evidence?

Mr. Elkins: No, your Honor. That is everything.

The Court: Then they are received in evidence.

* * * * * * *

[fol. 171] The Court: Well, tomorrow at 10:30 will be all right. I am as busy upstairs as I can be with administrative work until twenty after 10 every day.

Let us see where we are heading here. We are going to have the comments of the plaintiff as to the significance of the government's documents?

Mr. Elkins: Yes, your Honor.

The Court: Then we will have the comments of the defendants as to the government's documents.

Next will be the comments of the defendants as to the significance of the defendant's documents, and then the government's comments.

• • • • • • •

[fol. 172] The Court: And oral proof, if any, on Friday.

I do not want any of you to feel under pressure because I personally regard this as one of the vital parts of the case. I want to see where both of you feel these various documents are important.

Mr. Pettit: Will that contemplate starting at the beginning and going through, document by document, your Honor?

[fols. 173-175] The Court: If you want to do it that way, you may do that. It has been done in other cases before, me and it is very satisfactory. If not, you can handle it any way you want.

• • • • • • •

[fols. 176-180] New York, May 4, 1961, 10:30 A.M.

• • • • • • •

[fol. 181] DISCUSSION OF SIGNIFICANCE OF GOVERNMENT'S EXHIBITS

Mr. Elkins: Your Honor, in discussing the government's exhibits we will, from time to time, direct your Honor's attention not only to one document but, as it happens, we might have to backtrack from a particular document into several others. It is axiomatic, of course, that each document throws light upon another document, and, of course, it is a simple proposition of the law that the evidence must be viewed collectively, and we think that is particularly true of documentary evidence, that it must be viewed as a whole in order to give a complete and accurate picture.

The first document, your Honor, is Exhibit No. 1. Opposing counsel yesterday referred to this document particularly as one which might be misleading. I think, if we spend an extra 30 seconds on it, we might be able to remove his apprehensions.

To put this document in its proper place, your Honor, I

would like to explain first that, as shown by the document, sometime in October 1953 Singer became acquainted with a new Vigorelli model zigzag machine. That particular machine involved two novel ideas as far as Singer was con-
[fol. 182] cerned. The machine is a machine-carried multi-cam machine and it has the additional feature of a nest of cams which may be removed from the machine. So, if the stack has seven or eight cams, the operator may use those, and by using a dial or a knob on the exterior of the machine, change from one stitch pattern to another, and if the operator likes, she may take the stack of cams out, add new cams and insert it again. Therefore it is removable.

So the two ideas presented were: one relating to a built-in or a machine-carried cam machine, the other idea relating to a removable cam machine, and as I understand opposing counsel, he wants to make sure that this document is construed as relating to removable cam machines, and as far as Singer's machine is concerned, we agree.

We could direct your Honor's attention to page 6 of this document, the first full paragraph. There Singer, after discussing the Vigorelli machine and the possibility of it having filed applications to cover it, states in this letter by Mr. Stanford to a vice president of Singer, which is dated October 28, 1953:

> "However, there is no certainty that Vigorelli has
> [fol. 183] filed applications in countries other than Italy. And furthermore, even if such applications have been filed, there is no certainty that the claims contained in such applications have been drawn broad enough to be infringed by our 206-K mechanism.
>
> "In view of this situation and in view of the fact that it is problematical as to whether the common subject matter of the Vigorelli and 206-K machines can be validly covered by United States or foreign patents, we believe that the danger involved, if this company were to manufacture and sell the new 206-K machine, could be classified at the present moment as a usual business risk. In this connection we feel that, if patents of the United States, Great Britain and Germany were to issue to Vigorelli containing claims covering the subject matter common to the two machines, we could meet

such claims with prior art patents which would place the validity of the claims in question. However, we have no complete defense and we cannot say with certainty that we can overcome such claims by opposition [fol. 184] or invalidation proceedings, but we do feel that as a case of last resort we could cast doubt on the validity of any claims that Vigorelli may obtain and thus obtain a reasonable agreement with them."

And if I may direct your Honor's attention to page 9 wherein it is stated at the top of the page:

"Assuming Vigorelli obtains claims which are infringed by the new Class 206-K machine, we feel that in the United States, Great Britain and Germany we would have a fair chance of overcoming such claims by citations of prior art in opposition and interference proceedings or of obtaining an undertaking from Vigorelli not to seek to enforce the claims against Singer."

And the purpose of offering this document, your Honor, is to show the predisposition of Singer to enter into agreements with competing patent applicants in situations where, as it appears here, and I am quoting from the document, "we could cast doubt on the validity of any claims that Vigorelli may obtain."

The Court: That is a predisposition, isn't it, that is shared in by every sensible manufacturer in business?

[fol. 185] Mr. Elkins: We are pointing out solely with this document, your Honor——

The Court: I mean that is a universal disposition. If you have an article and you think there might be a claim against it and you are not confident of success, you try to negotiate with business prudence to arrange to settle the patent dispute, don't you?

Mr. Elkins: That, I suppose, is a common procedure, your Honor.

The Court: It is the universal procedure by any prudent business management. All right.

Excuse me for interrupting.

Mr. Elkins: No, your Honor, I don't mind your interruption at all, and I won't dwell further on that document.

Other documents will throw additional light on the same subject.

The Court: All right.

Mr. Elkins: Exhibit No. 2, your Honor, on the last page. This is a letter dated April 26, 1955, some two years after the previous exhibit from which we quoted, and it is from the Singer Patent Department, to Mr. Waterman, a vice president of Singer, whose duties include the Patent Department, or he is over the Patent Department in Singer. [fol. 186] This document merely introduces the existence of a Johnson application, and I will quote from the document. It is still speaking of the Vigorelli machine, and they say:

> "However, this company's United States patent application of Johnson, Serial No. 471,766, filed November 29, 1954 covering the experimental 282 machines" (parenthetically, that is the Singer machine 401) "contains claims which, if allowed, might be infringed in the United States by the later model Vigorelli zigzag automatic machine. At the present moment we cannot predict whether the broad claims of this United States application will be finally allowed, for there is much patent activity in the field of zigzag stitch ornamental machines."

[fol. 187] The reasons for referring to that, your Honor, is to provide some background as to the advent of the Singer-Johnson application, and the fact that it might be of some value in relation to the Vigorelli machine, and that Singer is not certain at this time whether the claims in its Johnson application would be allowed.

Exhibit No. 3, your Honor, is dated June 16, 1955, and it is a memorandum prepared by Mr. Williams of the Singer Patent Department, and it relates to the Singer acquisition of the Harris patent. That patent discloses but it did not claim a machine-carried multi-cam machine, and this document states that Singer acquired it in order to apply for a reissuance of it. This document says hardly anything more than I have said, your Honor. However, since it is one of the first documents and does contain some general,

non-controversial background material, I would like to read from it. The letter begins:

> "In an attempt to destroy or to limit the scope of the Italian Vigorelli patents Nos. 497,557 and 507,862, filed respectively in Italy on Jan. 28, 1953 and Sept. 29, 1953, we conducted a patent investigation which developed [fol. 188] U.S. Harris patent No. 2,693,778 disclosing a Class 107W type sewing machine modified by the addition thereto of a plurality of rotary cams and means for selectivity connecting the needle-bar with any of these cams so as to produce a predetermined pattern of zigzag stitching. The claims of the Harris patent, however, do not relate specifically to the multi-cam mechanism but rather to the specific form of an eccentric adjusting mechanism which is incorporated in the Harris machine. These claims do not dominate our Class 282 or Experimental 1040 machines"——

Parenthetically there, your Honor, Class 282 is the Singer 401 machine, and the Experimental 1040 is the Singer 319 machine.

The memorandum continues:

> "nor any of the existing family-type automatic zigzag machines made and sold by our competitors. However, it would appear that the Harris patent disclosure could support claims which broadly call for a multi-cam mechanism and cam selector means in a manner such as to read upon many of the existing types of automatic multi-cam zigzag machines including our Class 282 and Experimental 1040 machines as well as the Vigorelli [fol. 189] and Brother machines."

Parenthetically there, the "Brother machines" is the one manufactured in Japan.

> "Since the U.S. Harris patent has been issued for less than two years, it might be possible to reissue such patent and acquire broadened claims that would cover the multi-cam mechanism. If it is not ultimately possible to obtain such broadened claims the filing of a

reissue patent application might precipitate a patent interference proceeding between the Harris reissue application and any other pending U.S. patent application containing claims of like scope. Since the Harris patent application was filed in the United States Patent Office on June 9, 1952, a date prior to, for example, the earliest filing date of any of the known Vigorelli zigzag patent applications, it would appear that the Harris patent application would be awarded the claims involved in the interference on the grounds of its prior filing date. Further, even if such an interference were not declared between Harris and any of the U.S. pending patent applications containing similar multi-cam mechanisms for the reason that the Patent Office does not consider [fols. 190-199] claims of such scope to be patentable, the prosecution of such claims before the Patent Office and the final rejection thereof would be a good indication that no one else would be awarded claims of such scope by the United States Patent Office.

Thus, it appeared highly desirable for Singer to acquire all rights in the United States Harris patent, particularly in view of the patent situation surrounding the Class 282 and Experimental 1040 machines."

Thus, your Honor, at the moment, which is June 16, 1955, Singer had pending in the United States Patent Office three applications: the Johnson application, previously referred to, the Harris reissue application, and one other application that we have not mentioned, which was filed in 1954, the so-called Perla application.

. . . . . .

[fols. 200-202] As a result of the negotiations between Singer and Vigorelli, an agreement, which is the next exhibit, Government's Exhibit 11, resulted.

. . . . . .

[fol. 203] Exhibit No. 15, your Honor, is a letter dated
[fol. 204] December 10, 1955 from Singer-Italy to Mr.

Waterman, and we direct your Honor's attention to the second paragraph thereof in which it is stated:

> "During a friendly conversation with Mr. Vigorelli the following subjects were mentioned:
>
> "Vigorelli has reached an agreement with Bernina on similar lines to the one made with us which commits both companies not to raise opposition to the patents concerning multi-cam zigzag machines."

The Court: You are skipping that next sentence.

Mr. Elkins. I am sorry, your Honor!

The Court: I say you are skipping that next sentence. It wouldn't seem to be that they are conspirators, yet at this stage you claim that the conspiracy was afoot, don't you.

Mr. Elkins: No, your Honor. It is headed towards the conspiracy at this stage, and I would gladly put in the sentence referred to.

The Court: Very well. At this stage it appears that Singer and Vigorelli were not letting Gegauf in on anything. This is a private deal between Singer and Gegauf.

[fol. 205] Mr. Elkins: If your Honor please, it was just——

The Court: "In accordance with our agreement, Mr. Vigorelli made no mention to the Bernina people of his arrangement with the Singer Company."

Mr. Elkins: Yes, your Honor.

The Court: It doesn't sound to me like dealings of fellow conspirators, does it?

Mr. Elkins: The document from which you are now quoting, your Honor, is——

The Court: Exhibit 15, the one that you just read from.

Mr. Elkins: That's right.

The Court: I read the next sentence, where you stopped.

Mr. Elkins: Yes. It is dated December 10, 1955, and previous documents indicated the first time that Singer received any indication at all involving Gegauf and the fact that Gegauf had any patent applications involving the so-called built-in cam machine. It was during these negotiations, your Honor, that Singer learned for the first time of the Gegauf patent application, and at this time——

The Court: That was October 10th.

[fol. 206] Mr. Elkins: That's right, your Honor.

The Court: 1955.

Mr. Elkins: That's right, your Honor, and its knowledge of a United States patent application——

The Court: This letter, Exhibit 15, is two months later.

Mr. Elkins: That's right, your Honor.

The Court: All right.

Mr. Elkins: And if we may add, we have not referred at all, and there has been no reason as yet to refer to any negotiations that occurred between Singer and Gegauf. At this time Singer has not seen Gegauf. All that they know now is that Gegauf does have some applications which relate to the field. They also know now that there are negotiations going on and have been going on between Vigorelli and Gegauf, both of which have pending applications relative to this field, and that it ultimately resulted in an agreement, as stated here, which commits both companies "not to raise opposition to the patents concerning multicam zigzag machines."

Your Honor is right: Singer has not yet seen Gegauf. Gegauf is not yet in the picture, your Honor, except as he has negotiated and has entered into an agreement with Vigo-

[fol. 207] relli and except for the fact that Singer does have knowledge as of October 1955 of Gegauf applications. The Singer and Vigorelli agreement is dated, I believe, November 14, 1955.

As of January 19, 1956, and that is the date of the next exhibit, Government's Exhibit No. 16, from the Singer Patent Department to Mr. Waterman, this reflects that Singer now has, if not official information, at least some firm information as to the patent applications filed by Gegauf, and it indicates that it is now ready to enter into negotiations with Gegauf. And on page 2, your Honor, the first paragraph:

> "Several weeks ago the United States Patent Office unofficially advised us that the claims of our United States Harris Reissue patent application are allowable over the known issued patents. These claims, if allowed, would read on both the Singer and Bernina ma-

chines. It follows that such claims, if contained in a Bernina-United States patent application, would also be allowable over the known issued patents.

"We have been continually investigating the records of the United States Patent Office to locate any evidence [fol. 208] that would indicate that Bernina has filed a patent application corresponding to its original Swiss application of May 31, 1952 and until last week had found nothing to indicate that such an application had been filed. We now find that a Bernina patent application was recently recorded in the United States Patent Office, and, as this assignment referred to an application executed on May 20, 1953, it could relate to a patent application corresponding to the above-noted Swiss patent application. Unfortunately for us the parent Swiss-Bernina application was filed in Switzerland some nine days prior to the effective filing date in the United States of our Harris Reissue application No. 516,058."

I will continue to read, your Honor, because I think it is good information:

"From this it is reasonable to presume that if this United States-Bernina application in fact corresponds to the present Swiss case, the United States Patent Office would declare an Interference between this application and our recently-filed United States Harris Reissue application No. 516,058 for the purpose of de- [fol. 209] termining which of the two parties is entitled to the broad claim.

"Since any such United States-Bernina application would be entitled to its corresponding Swiss priority date of May 31, 1952, which is nine days prior to the effective United States filing date of June 9, 1952, of the Harris Reissue patent application, it would appear that Bernina might be entitled to the broad claim."

And now the author of this letter from the Singer Patent Department goes on to supply Mr. Waterman, the addressee

of the letter, with information relating to patent Interference proceedings. The document states:

"However, a United States Patent Interference proceeding is a long and complicated affair during which each party has an opportunity to attempt to block the ultimate allowance of the interferring claims to the opponent party. The outcome of such an Interference cannot be predicted with certainty.

"In other words, assuming that Bernina has filed such an application in the United States, then our [fol. 210] Harris Reissue application is of value to us as a means for opposing the final allowance to Bernina of broad United States claims covering multiple-cam ornamental machines."

If we may direct your Honor's attention to page 5 of this document, in the last line it states:

"In our opinion," says the Singer Patent Department, "no one party can or will corner the broadest patent protection in all or even in several of the principal countries.

"Should a Singer competitor acquire in any of the principal countries, with the possible exception of Japan and Switzerland, patents reading upon our Class 319 and Class 282 machines, we are reasonably certain that we can acquire favorable licenses under such patents.

"However, we hope to avoid the necessity of asking for such licenses and paying tribute under such patents by negotiating agreements with any potential patent owners before the worldwide patent picture clears relative to multiple-cam machines. This we have [fol. 211] already done with Vigorelli, and we suggested the same approach be used with Bernina and any other party which appears as a potential owner of a dominating patent."

The Court: Am I correct in my conclusion that this date, January 19, 1955, as shown by this exhibit, is the first time that Singer contemplated or discussed approaching Bernina or Gegauf with the idea of entering into any agreement?

Mr. Elkins: I believe that this is the first document of that nature, your Honor. Incidentally, the date of it is not 1955 but 1956.

The Court: Excuse me. I thought it was 1955. 1956 is right.

This is the first suggestion that we have of Singer contemplating discussing any agreement with Bernina.

Mr. Elkins: I believe that is the first document, your Honor, that hits directly on it.

The Court: And this was after the agreement with Vigorelli had been signed, sealed and delivered.

Mr. Elkins: The agreement with Vigorelli was signed, sealed and delivered November 14, 1955. It was during the negotiations relative to that agreement that Singer obtained for the first time information relative to the ex-
[fol. 212] istence of any Gegauf patents. The information that it received at that time came, it appeared, from——

The Court: Exhibit 10.

Mr. Elkins: Yes, and from Vigorelli, and on January 19, 1956.

The Court: Then am I correct in my understanding that Singer's agreement with Vigorelli was entirely completed and signed without even Singer having a thought of going to Bernina-Gegauf?

I won't press you at this point. Suppose you think that over and see. If my question is wrong, you correct it, will you, later on?

Mr. Elkins: No, I think it would be going too far, your Honor, to say that Singer had no thoughts, that Singer personnel had no thoughts——

The Court: Of course we don't know of any person's thoughts. I don't know what is in your mind. You don't know what is in my mind except as I display it by my words, gestures or my actions. But we have no evidence that Singer approached or contemplated approaching Gegauf. In fact, there might be evidence that would lead us to a contrary conclusion, that comment in Exhibit 15 that Vigorelli made no mention to Bernina of his arrangements with the Singer Company.

[fol. 213] Mr. Elkins: He was asked to.

The Court: Yes. And he agreed because he obeyed the suggestion or the request. All right. If, as you go along,

you find anything to correct my impression that the Vigorelli transaction of November was entirely completed and consummated without Singer even approaching Gegauf, and that the first evidence we have of them contemplating approaching Gegauf was Exhibit 16 under date of January 19, 1956, you tell me. And pardon me for interrupting you.

Mr. Elkins: No, that is all right.

Yes, we will accept that invitation, your Honor.

The Court: I just want to call one other matter to your attention. What leads me to the feeling that Singer did not even have a thought of it is the final, closing paragraph of this Exhibit 16 in which Stanford says, "Presumably the earlier we approach Bernina concerning this matter, the greater would be our chances of success."

Mr. Elkins: It says, "We believe that our position would be enhanced if we could negotiate an agreement of the Singer-Vigorelli type with Bernina. Presumably, the earlier we approach Bernina concerning this subject matter, [fol. 214] the greater would be our chances for success."

Exhibit 17, your Honor is a letter from Mr. Waterman, personal and confidential, to Mr. Baumann, who is the Director General of Singer in Italy, in which he requests information from Vigorelli relative to the details and the subject matter of the Vigorelli-Gegauf agreement. The last paragraph, first page:

> "It seems that during Dr. Lando's conversation with Mr. Vigorelli mention was made of the agreement Vigorelli has concluded with Bernina. This is stated to be along the same lines as that concluded between ourselves and Vigorelli last November. We are very much interested to learn of the Bernina-Vigorelli agreement as, confidentially, there is the possibly that we will want to meet sometime in the near future with Bernina representatives and discuss similar arrangements.
>
> "I think, if Dr. Lando could use the excuse of passing on to Vigorelli the foregoing information concerning the Singer patent about which he had inquired as a reason to again visit Pavia" (parenthetically, that is Vigorelli, who is located in the City of Pavia) [fol. 215] and have an informal talk with him, at which

time the information I have just given concerning the patent could be passed on to him, there would be a good opportunity to very informally chat about the Bernina agreement. We would very much like to know, of course, any further particulars that Mr. Vigorelli might pass out on such an occasion about the agreement with Bernina. We would like to know just how it came about that after Bernina having pressed as they did for the sum of $160,000 (this figure was mentioned during the course of our visit last November) the ultimate settlement was for no monetary consideration but only on the basis of neither party interferring with the other with respect probably to certain specific patents. We would like to know details of the particular patents that Vigorelli had come across which caused Bernina to drop its demands for the large amount for settlement; the numbers, if possible; and, of course, the inventor and the [fols. 216-218] country in which the patent or patents were taken out."

The Court: Which would seem to indicate that the conspiracy had not been formed yet, would it not?

Mr. Elkins: Gegauf and Singer have not yet met, your Honor.

The Court: That's right. When do you charge in the complaint that the conspiracy was formed?

Mr. Elkins: It was in 1956, in about 1956.

The Court: All right.

. . . . . .

[fol. 219] Mr. Elkins:

In Exhibit 19, on page 2, there appears a report of Dr. Lando on his visit to Vigorelli. Now this is submitted to Singer pursuant to Singer's request for information relative to the Vigorelli-Gegauf transaction, and it states:

"With reference to the contents of Mr. M. L. Waterman's letter of February 6, 1956, I had a meeting with Mr. Vigorelli in Pavia on February 29th and I am setting out below a summary of the information ob-

tained during the course of a long and friendly conversation."

On the same page:

> "After having underlined to Mr. Vigorelli the advantages of the agreement with Singer as revealed in the Harris case (fully recognized by Vigorelli) I proceeded to ask him what were the reasons which caused the change in the Bernina's attitude which, from an original demand for 100 million lire (or 20 Swiss Francs per machine) consented to an agreement which did not contemplate payments of any kind.

According to Vigorelli this change was due to a variety of reasons each of which had its importance and which can thus be summarized:

[fols. 220-221] "(1) Weakness of the Italian Gegauf-Bernina patent, the contents of which were too generic, and in which the device—common to the Vigorelli machine—which came to be fundamental (multiple cams cooperating with single cam-follower) is described in the patent among the minor details, in fact as one of the possible variations."

In paragraph 3, as another reason advanced by Vigorelli:

> "The exhibition by Vigorelli of patents, of whose existence Gegauf-Bernina thought that Vigorelli was unaware, patents which apart from excluding that the general claim (multiple cams) could be sustained, also left open to discussion the specific claim (single cam-follower) contained in the two patents under discussion."

In paragraph 4, as they number it, he goes on to state:

> "The declaration on the part of Vigorelli of the existence of other patents of the same kind as those mentioned above."

. . . . . .

[fols. 222-224] The Court: May I interrupt a moment?

Mr. Elkins: I beg your pardon, your Honor.

The Court: I want to refer to that Exhibit 19.

Mr. Elkins: Oh, yes.

The Court: What significance, if any, do you attach to the last paragraph of 19?

Mr. Elkins: Is that the paragraph beginning, your Honor "Both parties further undertake not to cede"——

The Court: No, in that paragraph where it says "Mr. Vigorelli's reply was interesting 'I was under the impression that Singer was collecting information for opposing the Gegauf-Bernina patent in U.S. and prevent the sale of their machine there.'"

Mr. Elkins: I am trying to locate it—oh, I see. It goes on, your Honor, on page 3.

The Court: Yes. Suppose you make a note of it and make comment on it later on, if you want to—or your assistants can make a note of it.

Mr. Elkins: We attach no great significance to it one way or the other right now, your Honor. I think other documents will fill in.

The Court: All right.

. . . . . .

[fol. 225] Mr. Elkins: The next exhibit, your Honor, Government's Exhibit No. 22, merely shows that a meeting between Singer representatives and Gegauf has been set for April 12, 1956.

. . . . . .

[fol. 226] The next exhibit, Exhibit 24, sets forth some of the details of the negotiations that occurred between Singer and Gegauf.

On the second page, in the last paragraph, about the fifth line down, your Honor, the writer of this memorandum, who is Mr. Waterman, vice president of Singer—and the date of the memorandum is April 13, 1956, and it is directed to Mr. Lightner, president of Singer, and it states:

> "We certainly left with them no doubt but that we were going to offer objection to the issuance of their patent not only in the United States but in every other country of the four in which they are seeking patent

or have patent protection, and we let them know that we thought we could knock out their claims, but that in so doing we were probably going to hurt both of us. I think that at the end of our long meeting they felt a little bit different about their situation than they [fol. 227] did when we started because they went into a huddle and actually drew up a paper which they were willing to sign and I won't say wanted us to sign but which we could sign."

And if we may direct your Honor's attention to the first page of this exhibit, paragraph 3, wherein Mr. Waterman states to the president of Singer "Gegauf's big fear is that the Japanese machines coming into the United States will be sold at a lower price than his machines will be because of their low-price labor. I think his fears are well-founded, and we did not do anything to cause them to be other than along the line that he was thinking, because one of the strong points of our argument for the agreement between our two companies is in order to fight against this Japanese competition in their building a machine that in any way reads on the patents of ourselves and of Bernina which are in conflict."

This document also reflects on the second page, the second full paragraph, that Mr. Gegauf was present at these negotiations together with Stanford of Singer and Mr. Waterman of Singer.

The next exhibit, Exhibit No. 25 is out, your Honor. It has been excluded.

[fol. 228] Exhibit No. 26 is an agreement dated April 14, 1956, between Singer and Bernina.

The Court: Let us spend one moment on Exhibit 24, the paragraph that you read from the first page marked "Japanese competition in their building a machine that in any way reads on the patents of ourselves and of Bernina which are in conflict."

Mr. Elkins: Yes, your Honor.

The Court: Must not we read this "which are in conflict", as referring to the prior exhibits which show that this is not a conflict of claims as much as in priority of filing—that the real dispute was who had the prior filing rather than the nature of the claims; that there was no con-

flict in the claims of the patent applications but the conflict would arise from interference proceedings because of an alleged 9-day earlier filing of a Swiss application.

Doesn't he mean that when he says "conflict"—isn't that a conflict which is derived from a priority of filing, as revealed by the prior exhibits rather than the breadth of the claims of the patent applications?

Mr. Elkins: I believe your Honor is right, your interpretation is right. However, so that there will be no possibility of an error by omission, we believe here that [fol. 229] Mr. Waterman was talking about the Geguaf patent application and the patent applications of Singer, and the fact that each patent application or applications had matter that was the same and therefore in conflict.

The Court: But the conflict arose because of the date of priority, because of an interference of priority of filing.

Mr. Elkins: Then there is, as indicated by the documents, that Gegauf is nine days prior.

The Court: So it might be argued, as pointed out by Singer, that the Gegauf Swiss application was filed in Switzerland nine days, I think, before the Singer application was filed here in the United States, as I read the prior exhibits.

Mr. Elkins: That is substantially it, but in order to fill in, your Honor, may I say that there was no uncertainty here in relation to the priority by nine days of the Gegauf application. Gegauf is, as we say, a manufacturer of Switzerland and is not a resident of the United States. The other patent which Singer—or the patent which Singer has pending here in the United States is the Harris Reissue application which it acquired from a Canadian, so [fol. 230] that here we have a situation wherein the two applicants, original applicants are non-citizens of the United States, and that under the rules the determination of priority as to both goes back merely to the date of the filing of their original foreign application, namely, Harris in Canada and Vigorelli—or rather, I am sorry, Gegauf in Switzerland.

So it is merely looking at those dates and seeing that Gegauf is nine days prior.

Now the agreement that resulted, your Honor, in Exhibit 26——

The Court: What I had in mind was that the agreement between Gegauf and Singer it would seem did not operate to acquire broader patent claims but simply to establish the validity of one of the two patents, both with the same claims, so that this was not an agreement that contemplated an acquisition of broader claims than those which were asserted in either of the patent applications.

Mr. Elkins: If we may address ourselves to that for a moment, your Honor, I do not think there is any misunderstanding.

The Court: All right.

[fol. 231] Mr. Pettit: I would like to call attention to something that I think he would like to know. I think he inadvertently made a mistake—I may be wrong, but the priority date is not determined solely by the filing date. Harris could have shown that he disclosed his invention here and thereby he would have been earlier than Gegauf at that time. I think he misunderstood that.

The Court: But in either event, the conflict arose from the date of priority of filing and that the agreement between Singer and Gegauf did not operate to broaden the claims of the patent applications but simply to establish the validity of one of the two of them, which would have resulted anyway.

Mr. Pettit: That is correct. The only mistake was that he said there was no uncertainty as to the date, and there was uncertainty because Gegauf could not know.

The Court: All right.

Mr. Elkins: I did not catch the last comment of opposing counsel.

The Court: Well, Mr. Pettit points out that Singer's documents really point out the situation which may be raised by a question of priority of filing, but that Singer in its documents also felt quite positive or quite assured [fol. 232] of its position of ultimately sustaining the Harris patent, and it was simply to avoid a conflict, an interference conflict, and to clear of this question as to priority of filing that Singer was prompted to go in and make this agreement with Gegauf.

Mr. Pettit: Your Honor, we had no assurance that we would be ahead. In fact, we felt confident because we knew the facts that Gegauf would be ahead. The only point

was that there was no certainty, because Gegauf did not know about these disclosures in this country. Therefore when they were negotiating there was no certainty as to what the facts were in Gegauf's mind. He did not know the disclosures situation. We did. Therefore Singer did know that it would be beaten by nine days.

Mr. Elkins: There are a few matters, your Honor, to which we would like to direct ourselves merely for the purpose of filling in the record, and to make sure that the picture is an accurate one.

I am reading now from paragraph 37 of the agreed statement, which states "Prior to January 19, 1956, the United States Patent Office had unofficially advised Singer that the claims in its U.S. Harris Reissue patent application, which claims would read on both the Singer and the Gegauf machines, were allowable over the known issued [fol. 233] patent. On January 19th Singer's Patent Department pointed out to Singer officials that such being the fact, it followed if such claims were contained in a Gegauf United States patent application, they would be allowable and that with a priority date nine days prior to the filing of the Harris Reissue application, it would appear that Gegauf might be entitled to the broad claims."

It goes on: "It further pointed out that in such event the Harris Reissue application was nevertheless of value to Singer as a means for opposing the final allowance to Gegauf of broad United States claims covering multicam machines. It accordingly strongly recommended that Singer attempt to work out with Gegauf an agreement along the lines of the Vigorelli-Singer agreement and pointed out that chances of negotiating such an agreement would be greatly enhanced if Singer could approach Gegauf before any patent interference would be claimed as prior to any such interference, while Gegauf would have no knowledge as to the effective filing date of the Harris patent application, Singer would be in a better bargaining position with Gegauf."

So it seems the filing dates were of particular significance, and although opposing counsel says that if Mr. [fol. 234] Harris had his machine here in the United States for some time and disclosed it, that of course would come into an interference proceeding.

Now in relation——

The Court: But my point was—and if I am wrong, you correct me—the net result of the agreement between Gegauf and Singer was not to acquire broader patent claims but simply to acquire a right in a patent which was established, irrespective of the conflict of filing dates.

Mr. Elkins: If your Honor please, the applications of both had in them, as indicated by these documents, what they described as broad claims. The purpose of conflict proceedings, opposition proceedings, interference proceedings is varied, including the right of the parties to file motions, and to perhaps narrow the claims of the other applicant. As to interference in the United States, it is twofold: one of the minor functions, or one of the functions of it is to determine the priority, but that is only one phase of an interference proceeding, of the interference proceedings, after the claims on which the interference is declared is made known to each of the parties, and then the parties for the first time——

[fol. 235] The Court: You assume that I understand that, but there is no record here that Singer would oppose the Gegauf patent because it interfered with the claims allowed in any other patent, other than the Harris application, so that the agreement between Gegauf and Singer served only to dispose of a possible interference proceeding as to which patent application had priority and did not affect the patent claims or the application claims as stated in either application.

Mr. Elkins: No, your Honor, we do not agree.

The Court: All right.

Mr. Elkins: Which introduces us to the next exhibit, your Honor, Exhibit No. 26 between Singer and Gegauf, dated April 14, 1956.

On the first page of this agreement Singer lists, or there is listed the various Harris Reissue applications which is noted [illegible] in the United States, Great Britain, Belgium, Canada, France, Italy, Germany, Japan and Sweden, and then there are listed the four patent applications of Gegauf, which is noted for the U.S.A., Italy, Germany and Switzerland.

Now on page 2 of this agreement, in the paragraph

numbered 1 it states "Singer and Gegauf each undertakes not to do anything, either directly or indirectly and in [fol. 236] any country, the result of which might restrict the scope of the claims of the other party relating to the subject matter of the above mentioned patents and patent applications."

As to that provision, your Honor, we say that that precludes both Singer and Gegauf from engaging in any kind of a proceeding whatsoever which might possibly "restrict the scope of the claims of the other party"—and not only that, but they are precluded from doing anything directly or indirectly in any country, the result of which might restrict the scope of the claims of the other parties—and our mind goes back to the memorandum or the letter of Mr. Waterman in which he stated relative to this agreement "One of the strong points of our argument for the agreement between our two companies is in order to fight against this Japanese competition in their building a machine that in any way reads on the patents of ourselves and of Bernina which are in conflict".

And this paragraph here is, we say, the result of it.

The agreement goes on to provide that "Singer and Gegauf each undertakes, in accordance with the laws and regulations of the Patent Office concerned, to facilitate [fol. 237] the allowance in any country of claims as broad as possible, as regards the subject matter of the patent and patent applications referred to."

Paragraph numbered 2 reads: "Singer undertakes not to attack Gegauf, either directly or indirectly, in any country:

(a) on the basis of any of its above mentioned patents or patent applications.

(b) for the present construction of the Bernina Sewing Machine as shown on the photograph attached to the present agreement and signed on the back by both parties."

[fols. 238-239] Paragraph 3 provides:

> "Gegauf undertakes not to attack Singer either directly or indirectly in any country on the basis of any of its above-mentioned patents or patent applications."

The significance of that agreement, your Honor, is, we say, twofold. Significant is the paragraph under which each undertakes not to do anything directly or indirectly and in any country, the result of which might restrict the scope of the claims of the other, and also the provisions which indicate that Singer, pursuant to this agreement, is free now of any patents that might result to Gegauf, free to manufacture in the United States and to sell its products in the United States and, indeed, throughout the world, without any thoughts as to a patent, that might ultimately result from these applications, to Gegauf, and that privilege Singer has royalty-free.

. . . . . .

[fol. 240] The exhibit from which we are quoting, Government's Exhibit 27, is entitled Notes Dictated at Milan, Friday, April 20, 1956, and this document reflects that there is a discussion here at Milan a few days after the execution of the Singer-Gegauf agreement, which discussions are between Mr. Stanford and Mr. Waterman of Singer and Mr. Vigorelli and Vigorelli's patent attorney.

If I may direct your Honor's attention to page 2, the first full paragraph states:

> "At this point it should perhaps be mentioned that Mr. Stanford and I have discussed between ourselves whether we should say anything to Mr. Gegauf about our feeling that we could prosecute his patents that will be issued sometime within the next few months in the United States better than perhaps he could if [fol. 241] we owned them, but we had decided not to say anything to Mr. Gegauf about this at this time.
>
> "In talking with Mr. Vigorelli's lawyer, Mr. Stanford dropped this view to him. The point was immediately understood, and the question was raised if we would have any objection if they were to pass the word on to Mr. Gegauf that they were raising this point. We said that of course we would have no objection but that we ourselves did not wish to do this, and we would not want the suggestion coming to Mr. Gegauf at this time as from us. If they wanted to suggest it, it was all right."

We say here that Singer, after a few days, previously agreed with Gegauf that it would not do anything which might limit the scope of the claims of the Gegauf patent applications in any country, including the United States, that might restrict the scope of those claims—"has at least within a few days thereafter the intentions of buying the Gegauf applications," and we also note that in order to get that particular subject going, Mr. Stanford dropped such a view in talking with Mr. Vigorelli's lawyer and, as the document states, "The point was immediately under-[fol. 242] stood."

We do not mean, your Honor, when we quote from this document, that we consider that this memorandum gives the full content of the negotiations, of the discussions, the conferences between Vigorelli and his patent attorney on the one hand and Stanford and Waterman of Singer on the other hand which occurred here in Milan, Italy. This document merely reflects that Singer tells Vigorelli that it would be good if Singer owned the United States patent applications of Gegauf and they asked Vigorelli's patent attorney to make some effort in that direction to prompt it from Gegauf.

Exhibit 28 is a handwritten note of Mr. Stanford of the Singer Patent Department which is stamped by the Patent Department "Received May 7, 1956," and, as your Honor notices, it is handwritten note, and we only want, however, a sentence from it, and that is clearly legible. In the second paragraph, the second sentence, Mr. Stanford states in this letter, which is addressed to Mr. Williams:

> "When in Italy we laid careful plans for Gegauf to be advised by a third party that Singer could best handle the patent situation if we owned the Gegauf [fol. 243] United States patent. Think it will bear fruit."

Mr. Stanford is obviously referring to the conference at Milan in which Singer representatives requested the aid or the cooperation of Mr. Vigorelli or his patent attorney to prompt the Gegauf assignment of his United States patent applications to Singer.

In making this statement, we want to point out to the court that Mr. Stanford does not talk about Singer being

best able to handle the patents of Mr. Gegauf. He is not here referring to a patent. Hs is referring to something which is far broader than that and something that encompasses much more, as we will show, when he says, "We laid careful plans for Gegauf to be advised by a third party that Singer could best handle the patent situation if we owned the Gegauf United States patent."

As we say, he is not talking about a particular patent; he is talking about having laid careful plans that Singer could best handle the patent situation if it owned the Gegauf patents, and he is not referring to the handling of a particular patent.

The Court: Wait a minute. Doesn't he refer to the previous letter, Exhibit 27, page 2, the first and second complete paragraphs of page 2? Isn't that what he is [fol. 244] referring to?

Mr. Elkins: Page 2, your Honor?

The Court: Yes, that they suggested to Vigorelli that he should talk to—didn't suggest it, but they brought Vigorelli around to the point where he said he would talk to Gegauf about whether or not Singer could prosecute Gegauf's patents "which will be issued sometime within the next few months." Isn't that what this handwritten letter refers to?

Mr. Elkins: May I say, your Honor, that the handwritten letter to which you refer does relate to the conference in Milan between Singer representatives and Vigorelli and Vigorelli's patent attorney. The memorandum from which your Honor just read, which is Government's Exhibit 27, we referred to previously, and at the time we did we stated that although we were quoting from it we did not represent that it contained, and obviously it does not contain, the full contents of the discussions there between Vigorelli on the one hand and Singer on the other hand.

Here in the memorandum, as your Honor carefully notes —well, Mr. Stanford dropped his view to Vigorelli's patent attorney, who immediately understood the point.

[fol. 245] The Court: His view being that Singer could prosecute Gegauf's patents, which will be issued sometime within the next few months, in the United States better than perhaps he could if he owned them, and that's all it refers to. It doesn't refer to a lot of patents; it is

just this one patent that Singer had acquired a right to use. I mean, you talk of quoting from part of a document and then say that it doesn't contain everything. Have you anything to support that other than a sinister and unfounded suspicion? Have you any document to support this statement that there was anything else that happened at this meeting which is recorded in Exhibit 27 other than what is set forth in this memorandum?

Mr. Elkins: Well, we said, when we quoted from the memorandum, and we say now, that it does not purport, obviously, to set forth everything that was said between Singer and Vigorelli, and in relation to your question, your Honor, as to whether we will rely upon other documents to reflect light on what occurred at this conference at Milan, Italy, the answer is yes, we will.

The Court: All right.

Mr. Elkins: We are not reading—we did not read, did not try to read into this memorandum anything other than [fols. 246-248] what it specifically sets forth; and your Honor is right, it sets forth there that Singer is looking for the Gegauf patents and that Singer could better prosecute them in the United States.

. . . . . .

[fol. 249] The letter, without any changes, is Exhibit No. 30. It is from Mr. Waterman to Mr. Baumann and is dated June 11, 1956.

This, if your Honor please, recalls the conference between Singer representatives and Vigorelli and Vigorelli's patent attorney in the land to which we just referred, and the letter states:

> "When I was in Milan you will recall that we had a conference with Mr. Vigorelli and his attorneys. During this conference, the idea was put forward, I believe by Mr. Vigorelli's attorney, that it would be advantageous to all parties if Singer owned the Gegauf United States Patent Application No. 358,377. It was thought that it would be best if the suggestion that Gegauf transfer his patent application to Singer come to Mr. Gegauf from Vigorelli or some other source than Singer. It was left that Mr. Marcello Magnoni,

> Mr. Vigorelli's patent attorney, would write or otherwise convey to Mr. Gegauf's patent attorneys in [fol. 250] Zurich the suggestion that the transfer be made and, at the same time, set forth its advantages to all parties."

Now this document, too, throws light on the Milan conference and it adds an additional fact as to what occurred there in the discussions between Singer and Vigorelli. So that as well as Vigorelli undertaking the mission of initiating a transfer of the Gegauf patents to Singer, it was also agreed there that Mr. Vigorelli—and I am now reading from the document—"at the same time, set forth its advantages to all parties."—that is, advantages to Vigorelli, to Gegauf and to Singer."

[fol. 251] This document goes on to say in the second paragraph:

> "I am expecting a visit here in New York from Mr. Fritz Gegauf, Jr., in July and, before his arrival, I would be interested to know if Mr. Magnoni has transmitted the suggestion to Mr. Gegauf's attorneys. Will you please make inquiry as to whether or not this has been done."

Mr. Fritz Gegauf, Jr., referred to there, your Honor, is the son of Mr. Gegauf to whom we had previously referred, and we ask the court to note here that there is to be a visit in New York from Gegauf, Jr., to Singer, and that prior thereto Mr. Waterman of Singer wants to find out what approach, if any, has been undertaken by Vigorelli's attorney pursuant to the conference at Milan.

The next exhibit, Exhibit No. 31, is or sets forth the answer. This is a letter from Singer, Italy to Mr. Waterman and is in answer to Mr. Waterman's letter of June 11th that we have just referred to, and the letter reads:

> "The matter raised in your letter of June 11th has not been lost sight of and coincident with the receipt [fol. 252] of your letter today we have today received a communication from Ing. Magnoni which would indicate that there are good prospects for the transfer of the Gegauf patent to Singer being brought about.

"While I attach a copy of Mr. Magnoni's letter, I cannot do better than give you below a translation of same."

And then Magnoni goes on to say:

"With regard to the question of the advantage of the American Singer Company being in possession of the different patents which might be useful in defense of sewing machines with multiple cams, the writer has lately had the opportunity of talking to the patent attorneys of Mr. F. Gegauf on a number of occasions and the conversations have developed in such a way that the possibility and advantage that the Gegauf patent application in the States be assigned to Singer could be considered in a definite way.

"Because of the particular character of the question, this was done in such a way as to prompt an initiative to this end by Gegauf. The writer has good reasons [fol. 253] to believe that such a point of view might be accepted by Gegauf.

"I believe that in the next few days Messrs. Gegauf will get into touch with the writer with this end in view, and should this hoped-for occasion come about, he will be able to report freely on the conclusion of the question which it is hoped will be a favorable one."

This document, too, adds some information as to what occurred at this Milan conference to which we have referred. We ask your Honor to note that the documents that we have just discussed did not in and of themselves, in regard to Vigorelli's patent attorney, mention the idea of the American Singer Company being in possession of the different patents which might be useful in the United States.

We ask the court to bear in mind that the only letter that went out to Italy and to Singer of Italy in relation to this matter was the one we just read which in substance merely said "Find out from Vigorelli's attorney if he has carried out the mission which he was going to execute for us"; and the answer of Mr. Vigorelli's patent attorney, Mr. [fol. 254] Magnoni, as it appears in Exhibit No. 31, starts off without an aye or a yes or a no and says, "With regard to the question of the advantage of the American Singer

Company being in possession of the different patents which might be useful in defense of sewing machines with multiple cams" and so forth.

Vigorelli's patent attorney got that subject from some place. It was not, as we said, mentioned in the letter that we just referred to that went to Mr. Baumann. All that that letter did was to recall that there was a conference in Milan, Italy, and in picking it up Mr. Vigorelli's patent attorney begins his letter, as I say, simply with "With regard to the question of Singer being in possession of the different patents."

So that as to that Milan conference, your Honor, there were things said there other than as reflected in the memorandum by Mr. Lightner to which we earlier referred, and the subsequent documents show that as well as asking Vigorelli or Vigorelli's patent attorney to initiate the transfer of the Gegauf patent applications to Singer, there was also a discussion there as to the mutual advantages, of the advantages to all parties, namely, Gegauf, Vigorelli and Singer, and it is also clear from the document just referred [fol. 255] to that one of the things discussed there as an advantage to all of the parties concerned was the fact that Singer then would be in possession of the different patents which might be useful in the United States in relation to the multi-cam machines.

Exhibit 32, your Honor, also contains information from Mr. Magnoni, patent counsel for Vigorelli, as to the very same mission that he was accomplishing or attempting to accomplish for Singer, namely, initiating the transfer of the Gegauf patent applications to Singer. The letter, incidentally, is dated September 19, 1956, and is to Mr. Stanford from Mr. Lando, the Assistant Director General of Singer-Italy, and this letter, the quoted part, begins:

> " 'Mr. Gegauf is today effectively willing to transfer his patent application in the U. S. to the Singer, without regard or with little regard to the financial side of the matter. The interest of Mr. Gegauf in the matter has been arisen by the following developments:
>
> " 'during the various discussions between Vigorelli and Gegauf (wherein Gegauf stated that the Vigorelli ZZ/A machine was infringing the Italian Gegauf patent), Mr. Gegauf has been strongly impressed by the

[fol. 256] fact that the U. S. Van Tuyl patent No. 2,590,907 might very dangerously anticipate its invention. In effect, a third party who might know that the said Van Tuyl patent exists might take steps for having the Gegauf German patent held not valid.

" 'Mr. Gegauf is particularly and prevailingly interested to have a not objectionable patent in Germany, and for such end he made informally known to Mr. Vigorelli that the withdrawing of the Vigorelli application in the U. S. would be greatly appreciated, to prevent the issuance of a printed patent wherein the fact that the Van Tuyl patent exists will be made known to third parties.

" 'Informally, through Mr. Magnoni, Vigorelli agreed with the withdrawing of his U. S. application on condition that any other interested party (say, unamedly, Singer) agree to, and that another application (say, consequently, the Gegauf one) might be put at disposal of the said other interested party in lieu of the Vigorelli one, to make broader the protection [fol. 257] of the machines in the U. S., in addition to the Harris patents.

" 'Mr. Gegauf's mind has been therefore directed to the convenience of transferring his U. S. application to Singer.

" 'Mr. Magnoni pointed out that Vigorelli would consequently drop any direct means adapted to protect his machines in the U. S., but he is quite sure that Singer will take care of the protection of the machines of the general type of interest, by making use of the owned Harris and Gegauf patents.

" 'Further, Mr. Magnoni thinks that the claims of the Gegauf still-pending application probably might be completed by ones in which some of the Vigorelli features, if of interest, would be protected.' "

The conference between Mr. Waterman of Singer and Gegauf, Jr., to which one of the previous documents referred, did take place in New York and to our knowledge there is no memorandum which sets forth what happened there. Exhibit No. 33, however, relates to that conference between Waterman and Gegauf, Jr. and throws

some light upon it. In the first paragraph it refers to the [fol. 257a] visit of Gegauf, Jr.

> "We refer to the recent visit of our Mr. Gegauf Jr., with party at your office in New York City and thank you for your kind reception."

[fol. 258] In the next paragraph it shows that the subject matter of the conference between Waterman and Gegauf, Jr. related to the Singer acquisition of Gegauf patent applications. That paragraph reads "Your suggestion as to the pending United States patent re automatic embroidery stitching machines has been taken up with Mr. Gegauf, Sr. and we can inform you that he might be interested in such an agreement."

This last paragraph, your Honor, also throws some very telling light upon that conference between that Gegauf, Jr. and Waterman, and it states "We agree that something should be done against Japanese competition in your country and maybe South America, and are therefore looking forward to your early reply".

We say that that response to the visit of Mr. Gegauf, Jr. in New York and his conference with Mr. Waterman indicates that they talked about the feasibility, of the advantages of Singer acquiring the Gegauf patent applications, and that it also involved the use of those patents against Japanese competition in the United States.

The next exhibit, Exhibit No. 34, sets up a conference date with Gegauf and in relation to the agreement with Gegauf, relative to the assignment of his United States [fol. 259] patent application says, beginning in the second line "We feel arrangement can be equally advantageous to both."

Exhibit 35 further relates to the proposed meeting between Gegauf and Singer representatives and regarding the same subject matter, that is, the assignment by Gegauf of the patent applications in the United States to Singer, Mr. Waterman, the author of this letter which went to Mr. Fritz Gegauf, and is dated September 7, 1956, relative to that agreement, said "We do believe that it may be possible that we can both strengthen our positions with respect to the Japanese competition which you mention, and I hope

that we can again meet and discuss our respective situations."

Exhibit No. 36, your Honor, contains two paragraphs which present a succinct picture.

In the first paragraph, Mr. Stanford of the Singer Patent Department states "This will confirm our today's telephone conversation in which I advised you that Singer is licensed under any claims that Mr. Gegauf may obtain in his U.S. patent application No. 358,377 and Bernina is licensed under any claims which Singer may obtain in its Harris patent application Re. 516,058."

[fol. 260] The letter goes on in the second paragraph and says "This will also confirm my statement that Singer is interested in acquiring all of the rights in the Gegauf patent application No. 358,377 and for that reason I wish to have knowledge of the file contents before I leave for Europe on Monday, September 17th."

That letter, incidentally, is directed to Mr. Leon M. Strauss, who is patent attorney in the United States for Mr. Gegauf.

Now there was a conference between Mr. Gegauf and the Singer representatives, as reflected, your Honor, by Government's Exhibit No. 37. This is a letter dated October 9, 1956, directed to Mr. Lando, Assistant General Director of Singer Italy, and contains information which, as stated in the last paragraph, Singer thought Mr. Lando might like to have if the subject should come up in talking with Mr. Vigorelli or his attorney; and the letter indicates that there was a discussion between Singer and Vigorelli, and that no agreement relative to the assignment of the Gegauf patent to Singer was made.

There is a later document, your Honor, which indicates that at this conference on October, 1956, the parties agree that they would defer any further negotiations until the [fol. 261] patents proceeded in the United States Patent Office.

Consequently, there is a gap of time as between that phase of the negotiations and the next phase that were undertaken some time later.

The Court: Don't you think that that gap occurred because Gegauf wanted to get $1,000,000 from Singer?

That does not ring like a conspiracy to me, you know.

Mr. Elkins: In relation to the amount of money that Gegauf wanted.

The Court: Yes. In Exhibit 38, you have a recording there—I think it is 38—let me see.

Mr. Elkins: Yes.

The Court: Maybe it is 37—37 records that Gegauf asked for $1,000,000, and then after a lengthy conversation—and it must have been quite lengthy—he reduced his request to a quarter of a million dollars.

Mr. Elkins: Correct.

The Court: And Singer apparently at that point said, in quite a friendly basis, as is recorded in the document. "Nothing doing".

Now does that spell out a conspiracy?

[fol. 262] Mr. Elkins: Your Honor, it spells out that this particular phase of the negotiations did not result in any assignment by Gegauf to Singer.

The Court: Doesn't it spell out that these people were dealing at arm's length? Isn't that the natural inference that should be drawn from that?

Mr. Elkins: I cannot draw that, your Honor, and I do not believe that it is——

The Court: It is like a man with dark glasses who is sensitive to sunlight!

Mr. Elkins: What is——

The Court: This transaction occurred after the point where the government says the conspiracy had been formed, because, as I understand it, the government's contention is that the conspiracy was afoot at the time of the Gegauf-Singer agreement. Now this is after that. Here you have Gegauf looking for $1,000,000 from Singer.

Mr. Elkins: To be exact, your Honor, after lengthy negotiations, a quarter of a million dollars.

The Court: That is a lengthy conversation.

Mr. Elkins: Yes.

The Court: That is $750,000 worth of conversations.

(Laughter)

[fol. 263] Mr. Elkins: That is right—$750,000 worth of conversations, according to the exhibit, and one would think that perhaps Mr. Gegauf did not come down three-quarters of a million dollars merely because of a lengthy conversation.

The Court: I suppose that Gegauf, the natural inference would be that when Singer got in touch wtih Gegauf's New York attorney the New York attorney must have said "Here's a chance of you collecting a little money from your alleged conspirator, and ask him for a million dollars and see how much you can get out of it."

Mr. Elkins: Possibly, your Honor.

The Court: All right.

Mr. Elkins: We would like to say this, your Honor, which is in our mind. We say here that as a result of these negotiations ultimately patents are grouped in Singer, a Singer pool, and that that is an essential part of the conspiracy.

Now, the mere fact that one party has more to contribute to the pool neither adds nor detracts from the question as to whether or not there is a conspiracy of the type as we described it. Certainly, Gegauf is not trying to say, "Well, fine, we will start the pool and I will take a patent [fol. 264] which I think is worth a quarter of a million dollars and I will throw it in, with nothing to boot."

The position of Gegauf seems to be, or could be, "We think we will show that inasmuch as he is contributing more to the pool that there should be something to boot."

The Court: But he has already made the agreement with Singer giving Singer a license.

Mr. Elkins: That's right, your Honor.

The Court: To manufacture and market under the Gegauf No. 1 application, hasn't he?

Mr. Elkins: Yes, your Honor.

The Court: And that was an act that you say marks the actual work done under the conspiracy, and you say that the evil of all of this is that while it may be lawful for an American manufacturer to acquire a patent monopoly to protect and market his product, that the evil is that this transfer was accomplished as a result of an unholy alliance on a worldwide basis, and all the other allegations, to stop importation of Japanese machines.

Mr. Elkins: Yes, your Honor, that is the size of it, and may I fill in. We say as to the previous agreement——

[fols. 265-266] The Court: Now, let me ask a question on that. You don't mind me interrupting you?

Mr. Elkins: No, not at all.

The Court: So I can get your point here. The thrust of your contention—now, when you spoke of this globular conspiracy, in that fashion, did you mean to intimate by that—you don't charge it in the complaint, but I was wondering whether you meant by that that there had been a worldwide division of territories.

Mr. Elkins: No, your Honor.

The Court: You don't charge that?

Mr. Elkins: We don't charge that.

The Court: Okay. All right, I simply wanted to be sure of that.

• • • • • • •

[fol. 267] Your Honor, Government's Exhibits No. 38 and 39 and 40 and 41 and 42 we can dispose of in one swoop. They all relate to the same subject matter and involve letters between Singer officials and a proposed letter to Gegauf, and, finally, the adoption of the letter to Gegauf.

And the only part to which we went to refer is in exhibit, Government's Exhibit 41 on the first page, in which it is stated by the Singer Patent Department to Gegauf: "Our agreement provides that this interference is to be settled in accordance with the patent laws of the United States."

The Court: Now, that is the interference as to the priority and date of filing, isn't it?

Mr. Elkins: That is an interference, your Honor, between a Singer patent, Singer-Harris, and Gegauf patent application.

The Court: As to what? As to the scope of the claims, or as to priority of filing?

Mr. Elkins: An interference, your Honor, would involve both, or could involve both.

The Court: It might involve both, but what did this one involve? It seems to me that everything indicated that [fol. 268] something involved a point of priority of filing.

Mr. Elkins: There are, or were prior to this time, and at this time, October, 1956, two patent applications in the United States Patent Office which had similar subject matter, and consequently the Patent Office declared that they interfered, and pursuant to the declaration of the interference an interference is established, and one part of it

certainly involves a determination as to which one is prior, but as your Honor stated this morning you are acquainted with the fact that an interference proceeding can involve much more than merely determining who is first.

. . . . . .

[fol. 269] The Court: I see in Exhibit 16 on the second page Singer recognizes that the claims of the Gegauf application are the same and anticipate the claims of a Harris application if it has priority, so that the only possible interference in Singer's view would be one of priority of filing.

Mr. Elkins: Your Honor, merely because Singer has set forth a claim in an application it does not follow from that that the same claims in another application are completely patentable and allowable. If Singer loses on an inter-
[fol. 270] ference proceeding because its date was not prior to that of Gegauf, it is not out in the cold. Here if a competing patent applicant, and a competitor, is prior then Singer has all the right in the world to attack that patent application.

The Court: Singer recognized and believed that it had no right to attack the patent claims, and has so indicated in that Exhibit No. 16 that I have just called your attention to.

Mr. Elkins: As I understand it, there is no question in your Honor's mind but that Singer as a matter of law had a right to attack the Gegauf application at the interference proceedings to narrow the claim——.

The Court: If they had any basis for doing it, but by this Exhibit 16 it seems to me that Singer recognized it had no basis for such an attack. It beneficially advised that the claims of the U.S. Harris Reissued patent are allowable under the known issued patents, that there is no conflict then in prior art as disclosed from prior U.S. patents, and it said these claims, if allowed, would read on both the Singer and Bernina machines, it follows that such claims if contained in a Bernina U.S. patent application would also be allowable over the known issued patents.

[fol. 271] Singer, right or wrong, felt that if they were defeated on the priority of filing that Gegauf could stop them.

All right.

Mr. Elkins: Your Honor, still with Exhibit 16, if I may direct your Honor's attention to page 3 thereof, the first full paragraph:

> "However, a United States patent interference proceeding is a long and complicated affair during which each party has an opportunity to attempt to block the ultimate allowance of the interfering claims to the opponent party. The outcome of such an interference cannot be predicted with certainty. In other words, assuming that Bernina has filed such an application in the United States, then our Harris Reissue application is of value to us as a means for opposing the final allowance to Bernina of broad United States claims covering multiple cam ornamental machines."

As to the excerpts that you read, your Honor, before the Patent Office can declare an interference it must first make a preliminary decision as to whether or not there is anything here that is patentable, but that decision is [fols. 271a-273] not a final one, as your Honor I am sure well knows, it is preliminary and it is purely a precedent to the declaration of an interference. Thereafter, the parties in interference may, as we say, oppose the allowance of the broad claim to the other party.

. . . . . .

[fol. 274] We read at length from that exhibit, Exhibit 43, your Honor, although it was not the letter actually sent to Mr. Gegauf. The letter that was sent to Mr. Gegauf, however, was substantially the same with but one significant change: Mr. Stanford in his proposed letter for the signature of Mr. Waterman, as your Honor knows, specifically referred to the Japanese sewing machine manufacturers and the fact that there would be United States importers who would wish to deal in such Japanese products.

Mr. Waterman, when he rewrites the letter for delivery or mailing to Mr. Gegauf, changes that paragraph 3 so as to omit any specific reference to the Japanese manufacturers. However, his meaning is quite precise. It is obvious that he is referring to the Japanese manufacturers and to the Japanese products in his paragraph 3.

The Court: Don't you think that this is what brought about the assignment of the Gegauf patent to Singer? The [fol. 275] principle of law, if I am correct, is that one who is a mere licensee may not file suit for infringement.

Mr. Elkins: That's right, your Honor.

The Court: So that if there were machines brought into the United States embodying or copying the Gegauf invention, Singer, under its license agreement, could not bring a suit for infringement.

Mr. Elkins: That's right, your Honor.

The Court: And likewise under the Harris application, Gegauf could not bring a suit to enforce that, for infringement of that.

Don't you think it is that principle of law that brought about Singer's desire to secure an assignment of the patent so that it could assert both the Harris patent and the Gegauf patent against importations, as the owner of the patent and not as a licensee? Wasn't that the idea behind Singer's mind, which has to be assumed because these men are men skilled in the light of patents? To the average innocent, unknown person in the field, you might put a sinister interpretation upon this whole thing, but when you view this, that is, with that legal principle in mind, that one who is a licensee cannot sue for an infringement, isn't that what [fol. 276] prompted this arrangement?

Mr. Elkins: It is clear, your Honor, that there was a reason for the conspiracy as we allege it and the conspiracy as we allege it is—I will cover your Honor's question, but the conspiracy as we allege it is that these patents, Harris's patents together with whatever other patents might issue from the Singer applications would be grouped in Singer together with the patents that resulted from the Gegauf applications, and that the purpose of that was in order to give to the group patents a force and an effect that they would not have standing alone.

Certainly Singer, being the owner of the Harris patent, could not sue on a Gegauf patent, and Gegauf, being the owner of the Gegauf patent, could not sue on the Harris patent, which is merely another way, to my mind, of saying that each one had a particular and precise patent monopoly, which was covered by the four corners of their patents, and that the benefit of any patent pool or the benefit of grouping

patents in one is exactly to overcome what your Honor has described, to what your Honor has described is, I submit, the patent law of the United States.

[fol. 277] One patent entitles you to one patent monopoly, and one of the evil effects, as frequently stated by the courts, is that the idea of grouping patents in one with the understanding that that one will use them in order to exclude a particular competitor or type of competitor is that as a result of the grouping he then has a patent power which he would not otherwise have had, and I think that there is one case that puts it almost in those words.

. . . . . .

[fol. 278] Mr. Pettit: Your Honor, may I just interpose, because there was something said here which I think is quite misleading and is quite important.

He has not pointed out—and I think he should point out—that the Harris patent cannot possibly be infringed without infringing the Gegauf one.

The Court: You have said that at pretrial hearings, and I have that in mind, but you just make a little note of it when it comes your turn. Put it on your yellow pad, if you will.

. . . . . .

[fol. 279] Mr. Elkins: We agree, incidentally, with what Mr. Pettit has to say about the coverage of the Gegauf one patent and the coverage of the Singer-Harris patent.

We were discussing Government's Exhibit 44, which is Waterman's letter to Mr. Gegauf, and, as we pointed out, Mr. Waterman for some reason in the third paragraph of this letter which, as we say, was copied from the proposed letter of Mr. Stanford, changed paragraph 3 to omit any specific reference to Japanese manufacturers or U.S. importers dealing in the Japanese machines. His paragraph states:

> "When I had the pleasure of meeting you last fall, we had some discussion relative to the procedures that might be followed to enforce the patents referred to in the first paragraph of this letter"—(we might add here

that they are the United States Harris Reissue appli-
[fol. 280] cation and the Gegauf application)—"when issued against infringing manufacturers who primarily are manufacturers in other countries seeking markets in the United States and more and more throughout the entire world. These manufacturers are bringing out a large variety of ornamental stitch machines which would appear to come within the terms of claims which may be awarded in the United States with respect of the aforementioned Singer and Gegauf patents.

"A proper enforcement of these patents may make it necessary to instigate patent suits against each of the importers in the United States of whom there will perhaps be many. I think you will agree with me that neither one of us alone can protect himself most effectively. In our discussion we deferred any further action until the application might have progressed further in the Patent Office."

In this paragraph Mr. Waterman is referring to the negotiations between Singer and Gegauf that occurred in the fall of 1956, and, as we see in the last sentence of that paragraph, those discussions were deferred until the ap-
[fol. 281] plications might have progressed further in the Patent Office.

The Court: And you think the omission of Japanese manufacturers from this letter as finally written springs from a consciousness of guilt rather than from a regard for delicacy of expression?

Mr. Elkins: I do not believe, your Honor, that it is because of a delicacy of expression, and we believe that it is through a consciousness of guilt and perhaps an additional reason to which we will now get.

We may direct your Honor's attention to the first sentence of the Waterman letter in which, referring to his conference with Gegauf, he says:

"When I had the pleasure of meeting you last fall, we had some discussions relative to the procedures that might be followed to enforce the patents referred to in the first paragraph."

As your Honor will see from these documents, Mr. Gegauf is patent-wise, he is rather knowledgeable, and consequently it is clear that if Mr. Waterman merely told Mr. Gegauf that a suit on a patent was possible in the courts of the United States, such a statement would be ridiculous, it would not deserve a place in their conversation, and it would not [fol. 282] deserve a place in this letter.

We submit, your Honor, that when Mr. Waterman here talks about procedures that might be followed to enforce the patents referred to, he is indeed, referring to something in addition to a patent suit in a United States court, and the only other procedure that comes to mind is a procedure before the United States Tariff Commission.

I know of no other procedure involving a patent which could possibly be the subject of a conversation between Mr. Waterman and Mr. Gegauf as set forth here, and in relation to that we show or intend to emphasize in subsequent documents a consistent use of phraseology which, to our minds, is not consistent with merely bringing patent suits, and, as we hit that phraseology in memoranda and in letters, we will direct your Honor's attention to it.

It might be that there is some other construction for this language of Mr. Waterman, of course. We suggest that the reason why he omitted a specific reference to the Japanese, even though he has referred to them expressly in previous documents, is because here he wants to say something special about it, and through some consciousness of guilt [fol. 283] or some discomfort he decides not to state it in words that could be readily understood by a casual reader, but they are going to be understood by Mr. Gegauf inasmuch as he begins the paragraph with a specific reference to "our meeting of last fall, during which we had some discussion relative to the procedures that might be followed to enforce the patents referred to."

We do not say, your Honor, that that is definitive and that your Honor can go from there into a finding having to do with proceedings before the United States Tariff Commission, but we believe that that is on the way, and we will refer in subsequent documents to language which we think reinstates that.

The previous letter of Mr. Waterman to Mr. Gegauf is

answered by Mr. Gegauf in his letter of September 17, 1957 which is Government's Exhibit 45. This letter states:

> "Thanking you for your letter of September 12th, I am pleased to reply by return mail that I am looking forward to your visit in October for discussion either in Zurich or Steckborn regarding the mutual enforcement of our United States application No. 358,377 and the Harris Reissue against infringing products of the [fols. 284-285] foreign manufacturers."

We would like to note, your Honor, that Mr. Waterman, due to his oblique references to the Japanese in the previous exhibit, now has Mr. Gegauf of Switzerland referring to the Japanese manufacturers as "foreign manufacturers."

The Court: He is taking the cue.

Mr. Elkins: I presume so. And, your Honor, the significance of the document is the understanding here of Mr. Gegauf that the discussions under way between it and Singer involve mutual enforcement of his United States patent application and a Singer application against, we say, Japanese manufacturers.

. . . . . .

[fol. 286] The Court: Gegauf wrote Waterman in Exhibit 33, September 3, 1956——

[fols. 287-288] Mr. Elkins: Yes, your Honor.

The Court: —in which Gegauf said to Waterman "We agree that something should be done against Japanese competition in your country and maybe South America and are therefore looking forward to your early reply."

Mr. Elkins: That is right, your Honor.

The Court: So there is no occasion for Waterman to be squeamish about referring to Japanese competition at all, and this sinister aspect that you apply to this I do not think is supported by the prior documents.

. . . . . .

[fol. 289] The next exhibit is Exhibit No. 49, your Honor, and it is a letter to Mr. Lightner from Mr. Waterman. At this time Stanford and Waterman are negotiating with

[fol. 290] the Gegauf people, and the only part that we want to point out to your Honor is the final paragraph in which Mr. Waterman states: "Their patent lawyer and ours are to get together shortly, and as it now stands, to proceed to finalize the terms of the agreement in accordance with our discussion of yesterday. It may be that there will be some questions raised which will have to be clarified through correspondence after my return to New York, but I would say that as of now it looks as though agreement—if not already entirely reached—can be arrived at in a reasonably short time. I hope to hear by next Tuesday at Frankfort further particulars concerning the attorney's actions toward the finalization of the agreement."

The only significance of that, your Honor, is that the patent attorney referred to is Mr. Kirker; that these negotiations in October, 1957, have not been completed; that Mr. Waterman is now going to leave Zurich, or Switzerland, and he is going to Frankfort, and that he will hear later on from Mr. Kirker as to the development of the negotiations towards the finalization of an agreement.

Exhibit 50, your Honor, is a cable from Waterman in [fols. 291-292] Frankfort to Mr. Stanford of the Singer Patent Department, and in this letter we say that Mr. Waterman is indicating that now Mr. Kirker is negotiating with Gegauf on behalf of Singer, and that Mr. Waterman in Frankfort is receiving from Mr. Kirker various reports and Mr. Kirker in turn is receiving instructions from Mr. Waterman.

Now the first page of this cable sets forth three points raised in the negotiations. It reads:

> "Kirker Advises of Latest Three Points Put Forward First, 125,000 Single or 25000 Yearly Latter for Three Years Certain But Believes Half These Figures Might Be Accepted"

That relates to the pricing—the price negotiations that are going on between Mr. Kirker and Gegauf.

. . . . . .

[fol. 293] On the next page, page 3, Mr. Waterman continues:

> "Adain Emphasized for Kirker to Tell Willi that Application and Division Is in Our Opinion Leak Standing Alone"

Now, your Honor, I see that opposing counsel has suggested that we were reading this as saying "leak" when as a matter of fact there is a "w" running around some place. The copy—my photostatic copy of the cable, if it has a "w" over the "l", it is almost escaping my attention. I can see a bit of a blur there.

However, we say that the document says "leak", and we say that the idea presented is that the Gegauf 1 patent, as it ultimately came to be called, together with the Gegauf 2 patent, if put side by side, would present a pretty good barrier, and that one without the other would present a leak, and as we said the other day, we construe this as meaning "leak" in the patent wall, and it is our position——

[fol. 294] The Court: Did you notice that on the first page of this telegram there is a typographical error in the spelling of "divesional"—the "e" where there should be a "i"?

Mr. Elkins: Yes, your Honor.

The Court: Is that a mistake?

Mr. Elkins: It is a mistake, your Honor, which is——

The Court: You concede it is a mistake?

Mr. Elkins: I can see it is a mistake.

The Court: You concede that?

Mr. Elkins: I concede that, and I concede that I can see it, your Honor.

Now your Honor, the telegram that——

The Court: Did you see that on the second page of the telegram there is a second typographical mistake in that the word "devisions" has a "e" after the "d" instead of a "i"?

Mr. Elkins: Yes, your Honor.

The Court: Isn't it quite likely that finding two typographical mistakes, that this "l" should have been a "w"?

Mr. Elkins: No, your Honor. If I were to go over——

[fol. 295] The Court: Do you see, for instance, not two but another one on the third page of the telegram, in the

word on the top line "again" which is spelled "ad" instead of "ag"?

Mr. Elkins: I see that, your Honor.

The Court: I haven't gone over this telegram with the care that I would as a prosecutor, but just from a cursory reading I note three typographical errors.

Mr. Elkins: Yes, your Honor.

The Court: All right. If my grandchildren handed this in in a spelling class they would have at least three words marked wrong—and most likely four in spelling.

(Laughter)

Mr. Elkins: Then it would also appear, your Honor, that your grandchildren, if I may use your parallel, had about 120 words spelled exactly right.

(Laughter)

The Court: That 97 per cent accuracy is quite characteristic of my grandchildren!

(Laughter)

[fol. 296] I point this out not facetiously but seriously, seriously. Frequently in telegrams, cablegrams especially, where they are sent from foreign countries, words are misspelled.

Mr. Elkins: All right. If I may just comment on this for a moment, your Honor——

The Court: But you did comment on the fact that Gegauf was still looking for money.

Mr. Elkins: I will be happy to, your Honor. We do not contend that Gegauf is willing to throw in valuable property here, into this pool, without receiving some monetary consideration to boot, and it does not, we say, either add or detract from the government's position.

From what we see and from what you will see of the documents and various other evidentiary material, I am quite sure that we would all agree that Gegauf would be foolish to join a partnership in which he received no monetary consideration, in addition to the terms of the partnership agreement, in return for his applications.

The Court: It is the government's contention that they

formed this partnership when they made this agreement, the written agreement, some months before.

Mr. Elkins: April 14, 1956. Your Honor, if I may, we [fol. 297-302] do not say that the whole conspiracy bloomed on April 14, 1956. It has been our position that the essential phase and the principal thrust of the conspiracy had actually to do with the grouping of the patents in Singer so that Singer, for the benefit of itself, Vigorelli and Gegauf, could use those patents here in the United States to limit or exclude competition from United States importers of Japanese machines. That is the principal thrust.

And now, in addition to that, we say that in the early stages of their negotiations, Singer and Gegauf entered into an agreement which had an effect on the patents or which might have an effect on the patents which ultimately became grouped in Singer and that that was by virtue of his agreement by which each agreed not to do anything in any country which would narrow the claims of the other.

Certainly at that time, your Honor, at the time of that agreement, April 14, 1956, the conspiracy, as we believe it ultimately established, was not fully formulated as of that time.

• • • • • • •

[fols. 303-312] New York, May 8, 1961, 10:30 A.M.

• • • • • • •

[fol. 313] The Court: What I want to find out is this: I want to find out the theory of your case here. I have great difficulty finding it out—maybe entirely due to me.

Do you contend here that although there was nothing unlawful in and of itself in the acquisition of the Gegauf patents by Singer, that it becomes unlawful because they used a lawful means to accomplish an unlawful purpose? Is that your position here?

Mr. Elkins: I believe that that fairly well states it, your Honor. We do not say that the mere acquisition of a patent is unlawful.

• • • • • • •

[fol. 314] The Court: So the government's position here is that by doing a lawful act for an unlawful purpose they violated the law; is that the government's position?

Mr. Elkins: Yes, your Honor, and I always——

The Court: And the lawful act is the acquisition of the Gegauf patents by Singer which became unlawful because of the purpose for which they were acquired.

Mr. Elkins: And the fact that they were part of a conspiracy, your Honor, which is what you say, I think.

The Court: Which is that the conspiracy was designed to accomplish an unlawful purpose.

Mr. Elkins: That's right, your Honor.

The Court: Now then, the unlawful purpose that you claim was to be accomplished by the doing of a lawful act was that they intended to assert these Gegauf patents along with their own to prevent Japanese importations.

Mr. Elkins: Right, your Honor.

The Court: That is your case.

Mr. Elkins: That's right, your Honor.

• • • • • • •

[fol. 315] Exhibit 52, your Honor, is a letter dated October 25, 1957, from Mr. Kirker to Mr. Stanford, and this states:

> "Please find below a resume of our various telephone calls with Mr. Willi, concerning the above case:
>
> "Gegauf filed some time ago a divisional application for a part of the subject matter of the above U.S. patent application. The contemplated agreement must relate —according to Mr. Gegauf's point of view—to the basic application only, in its present form. In other words, the divisional application will not be included in the agreement.

[fol. 316] We replied to Mr. Willi that certainly, such a condition will represent a serious obstacle to reaching an agreement. . ."

We might point out that previously, as it indicated by this document, Mr. Kirker had conferred by telephone with Mr. Waterman, who was in Frankfort at that time, and that Mr. Waterman at that time instructed Kirker to point out to Mr. Gegauf that in the opinion of Singer the basic applica-

tion and the divisional application just referred to were, standing alone, weak.

The letter goes on at the bottom of the page and states: "We asked Mr. Willi"—who, incidentally, is patent attorney for Gegauf—"why Mr. Gegauf wished to keep for himself the original application since, at another time, Mr. Willi said that Mr. Gegauf is not very interested in said invention as regards the U.S.A. Mr. Willie answered that certain European companies are highly interested in the subject matter of the divisional application and that Mr. Gegauf thinks he could sell said divisional application to them. We replied that this represents probably a supplemental difficulty for reaching an agreement with Singer.

[fol. 317] "A second point raised by Mr. Gegauf was that he wished to be informed when Singer intends to introduce a legal action against a European company, and that such an action could be introduced only after Mr. Gegauf has given his consent. We pointed out that it would be better to set forth the condition in another form, namely to include in the agreement the name of the companies which Mr. Gegauf has in mind, and to restrict said condition to such companies."

At the bottom of page 2, Kirker writes:

"Since in the meantime we had reported the situation by telephone to Mr. Waterman in Frankfort, we added that, for Singer, the problem was only to buy the whole thing, namely, the subject matter of the original basic application in the U.S.A., with all possibilities of divisions and continuations, namely including the divisional application filed by Gegauf, and that there was no question of making two separate agreements and two separate payments."

The Court: Would you orient me a moment so I could be on the right course here? We have talked of Gegauf Patent 1 and Gegauf Patent 2. Gegauf Patent 1, as I understand [fol. 318] it, is what is referred to here as the original application, is that right?

Mr. Elkins: Sometimes it is referred to as the basic——

The Court: No; in this letter. Is "Gegauf patent" the original application, or did it grow out of the original application?

Mr. Elkins: I would say that Mr. Kirker here, in using the phrase "original basic application," is referring to both inventions and that at one time both of those inventions appeared in the same United States patent application.

The Court: But that is the first application which includes two inventions.

Mr. Elkins: That's right, your Honor.

The Court: And the second application, which is described as the divisional application, which you have called Gegauf No. 2, that is only one of the two inventions disclosed in the original application, Gegauf No. 1.

Mr. Elkins: That's right.

The Court: Now would you tell me what the two inventions are, roughly, which are stated in Gegauf 1 and which one of those two was picked out in the divisional application, [fol. 319] if you can?

Mr. Elkins: Yes.

The Court: If Mr. Weinstein would prefer to do it, that is all right.

Mr. Elkins: I believe that we can do it to the extent that your Honor requested.

The Court: Just so that I know what this is all about.

Mr. Elkins: Yes. These built-in cam machines must have and do have a plurality of cams, a stack of cams. The configuration on the cams differs and the stitch design that is ultimately to be produced by the machine is in accordance with those configurations. The intelligence of the cam, as they refer to it, is taken off by a follower and it imparts the intelligence to the needle bar.

In Gegauf No. 1 there are provisions for a stack of cams with a single follower, the single follower having the ability to engage any one of the cams, and that is done by the operator through a dial or a knob on the outside of the machine.

Gegauf No. 2 differs from that in that in Gegauf No. 2 there are a number of followers, one, indeed, for each cam, so each cam has its own particular follower, and the oper- [fol. 320] ator engages one cam or one follower with a

cam. Always that follower will engage the same cam. So that the simple difference is that Gegauf No. 1 provides for one follower having the ability to engage any one of a number of cams, and Gegauf No. 2 provides a follower for each cam.

The Court: And were both inventions included in the original application?

Mr. Elkins: That is my understanding. That is what it appears.

The Court: The claim with one follower and the claim with a multiple number of followers, one for each respective cam.

Mr. Elkins: That is my understanding, your Honor.

The Court: And when you speak of a division, you mean that the one follower was not included in the second application; it simply included a claim for an invention based upon multiple followers, one for each respective cam, is that right?

Mr. Elkins: I believe so, your Honor, if I can just say this: the divisional claim referred to is the plurality of followers, one for each cam. When they speak of carving [fol. 321] a new application out of the basic application, the thing that is carved out is Gegauf No. 2, a number of followers, one for each cam.

The Court: All right.

* * * * * * *

Mr. Elkins: That was not involved here, your Honor. What they are negotiating for here is the outright sale of these patent applications from Gegauf to Singer.

[fols. 322-324] The Court: So that Singer could itself file an infringement suit without naming Gegauf as the plaintiff.

Mr. Elkins: That would be one effect of it.

The Court: That would be the main effect, would it not?

Mr. Elkins: I am not entirely sure of what your Honor means by the "main effect."

The Court: Almost the only effect of any substance.

Mr. Elkins: As far as what your Honor says as to a particular patent and the proceedings involved in suing

upon it, it is all true, but I don't want to appear by agreeing with your Honor that we agree to anything other than that, concede anything other than that.

. . . . . .

[fol. 325] Exhibit No. 56 is a letter dated November 18, 1937. It is from Mr. Kirker to Mr. Stanford and it relates and gives certain details of Mr. Kirker's negotiations with Mr. Gegauf.

. . . . . .

[fol. 326] On the second page of this exhibit, Mr. Kirker writes: "Mr. Gegauf explained first that he has no objection against the idea of making an agreement with Singer in order to stop as far as possible Japanese competitors [fol. 327] on the U. S. market but he added that such an agreement might be reached under certain conditions only" —and we say it is obvious that Mr. Kirker did not get any ideas of his own in relation to an agreement between Singer and Gegauf, in relation to the grouping of these patents in order to stop Japanese competitors in the United States market.

On the same page, your Honor, in the paragraph marked "c" Mr. Kirker writes: "Mr. Gegauf explained also that the sum of $125,000 he asked for selling his applications No. 358,377 and the new application to be filed shortly, is cheap, and he could not go substantially lower. He explained further that if, instead of selling the application to Singer, he were to grant a license for said inventions, he would get every year many times more than the single payment of $125,000 he proposes. He added that around him everybody was against the proposal of $125,000 and advised him to ask for a much higher sum (we understood that these people around him were his family and some executives of his company). He even said that Mr. Willi told him this sum of $125,000 was low. Mr. Willi apparently did not react."

The significance of that, your Honor, is to demonstrate that inasmuch as a patentee is entitled to remuneration for [fol. 328] his patents, he is expected to proceed in such

fashion as will get him such remuneration, and that Gegauf hereafter is actually transferring his patent application to Singer for a consideration less than he believes he would be entitled to or would receive if he licensed instead of selling to a particular company.

On page 3, your Honor, in about the fifth paragraph, I believe, Mr. Kirker states: "During the discussion, we pointed out that it was right to compare what Bernina could get for a license to what Singer would pay for being in a better position for acting against common competitors. We presented the view that what Singer was prepared to pay is to be considered as an insurance premium for bettering its legal position and not as the equivalent of a license.

"To this remark Mr. Gegauf replied that we were right but that by giving Singer the possibility to stop the Japanese competitors in the U. S. A. there is a serious drawback for Bernina, viz. if Japanese competitors can no longer sell their machines in the U. S. A., they will try to sell them in Europe. We answered that if Bernina's pat-[fol. 329] ents in America permit Singer to stop the Japanese competitors, the corresponding European patents will permit to act exactly in the same way in Europe. But Mr. Willi and Mr. Gegauf, Sr. confessed that unfortunately the position was not so good in Europe."

We quote that, your Honor, for the purposes of demonstrating that this is not an ordinary sale of a patent or patent application from one person to another; that in these discussions here, referring from time to time to price, both parties are pointing out that very fact indeed, that this is not an ordinary assignment of patents from one to another, and that the basic idea involved, or one of the basic ideas involved, is that one purpose is to put patents in Singer for what we term the conspiratorial purpose.

The Court: You do not think that these hard-hearted and hard-headed—perhaps you might say hard-hearted, too—that these hard-headed businessmen were negotiating in a vacuum and were not fully acquainted with the realities of the situation—that there were certain national manufacturers of various countries who were in the field—that

the one that offered the strongest threat was of the country named, but that did not mean that they would be the only one to attempt to import by way of bringing in and intro- [fol. 330] ducing infringements on the patent.

These are practical businessmen, and they have sized up the whole market situation. Singer acquired these patents in order to assert them. Naturally it had to assert them against competitors. Who else would bring in machines which would be infringing but these competitors? And amongst those competitors happened to be the Japanese.

It is perfectly proper, as I see it. That is what has troubled me with this case from the very beginning—to acquire a patent in order to assert it against infringements. The law gives you that right to do it. You acquire it on the best possible terms you can. If you have to give a grant back of a royalty-free license, you do so, but you have to protect yourself and protect your industry, and you use a lawful means for a lawful purpose, and that is not a violation of the law.

All right, we will go ahead.

Mr. Elkins: Could I spend just a moment on that?

The Court: Surely.

Mr. Elkins: What we say is the violation, your Honor, rose out of the idea of grouping patents in Singer in order [fol. 331] to carry out the agreement between Singer and Gegauf which, as we say, relates to the exclusion of the Japanese products.

Now there is more power in five patents than there is in two. There is more power in a plurality of patents, and that is the evil of grouping patents in one ownership for a conspiratorial purpose.

The Court: Are you changing your position of half an hour ago when you told me that you concede that there was nothing unlawful in and of itself in Singer acquiring these Gegauf patents——

Mr. Elkins: Your Honor——

The Court: —that that was a lawful act?

Are you changing your position now?

Mr. Elkins: We are not changing our position now, your Honor. The question in and of itself raises certain loose ends. We are not dealing, as a practical matter, with an

acquisition in and of itself. We are dealing here with a conspiracy, with an agreement, an unwritten agreement, a conspiracy between Singer and Gegauf whereby they agreed to group patents in Singer for the purpose of enabling Singer to launch a patent attack against persons dealing in Japanese machines in the United States.

[fol. 331a] We say it is unlawful because such a grouping automatically, conclusively, gives to each of the patents a power that they did not have, as we contend Waterman meant when he said "standing alone."

The Patent Office, in granting a patent, grants a monopoly that covers the face of that particular patent, and we say that by grouping patents, that each of the patents thereby takes on more power than they would have standing alone.

[fol. 332] The Court: What is the grouping of patents that you claim was accomplished here which should not have been accomplished? Whose patents? Of Singer's with Gegauf?

Mr. Elkins: That is right.

The Court: Singer, without Gegauf, could not have stopped Japanese importations, could it?

Mr. Elkins: Yes. Singer had, your Honor, the three pending United States applications here in the United States: One, the Harris Reissue was, during the time of these negotiations here, about to issue, and they also had two others——

The Court: I asked you a question, and I do not know if you realize the significance of your answer.

Was Singer in a position, prior to the acquisition of the Gegauf patents, to stop the so-called infringing Japanese machines?

Mr. Elkins: Singer could have brought a suit involving, after 1957, on its Harris Reissue patent, a patent suit which, as I say, would cover all of the machines coming in from Japan.

The subject matter of the machine which corresponded to the Harris Reissue patent was a different subject matter [fol. 333] than that covered by Gegauf 1.

The Court: Don't you charge here that the wrong that Singer has committed is not the assertion of its own patents against alleged Japanese infringing machines but is the assertion of the Gegauf patents alone?

Mr. Elkins: No, your Honor.

The Court: I understood that to be your statement at the very beginning of the case.

Mr. Elkins: The conspiracy, your Honor, involved the idea of grouping patents in Singer so that ultimately Singer would have Johnson, the Harris Reissue, Gegauf 1, Perla and Gegauf 2. It involved the idea that these patents now grouped in Singer would be used by Singer to exclude, to the extent that they were able to, the Japanese imports.

The Court: But you have not alleged that acquisition of the Harris patent, the Johnson patent or the Perla patent was unlawful.

Mr. Elkins: That is correct.

The Court: Or that those acquisitions were to accomplish an unlawful purpose.

Mr. Elkins: That is right, your Honor. Actually the——

[fol. 334] The Court: So that what you have presented here, as I take it, and as I have been understanding you, is that the wrong that Singer did was to acquire the two Gegauf patents so that they could assert them against Japanese importations; that prior to the acquisition of the Gegauf patents they were not in a position to stop Japanese importations by alleging infringement of those patents which they themselves then owned.

Didn't you say that that was your case and that was your charge here?

Mr. Elkins: We say, your Honor, and we have used as frequently as we could, the idea of grouping or pooling patents in Singer. The two patents acquired were, as you say, your Honor, to which we attach significance, Gegauf 1 and Gegauf 2. Gegauf also had pending United States patent applications.

We have read from documents, your Honor, in which Gegauf said "We are looking forward to a discussion involving the usual enforcement and our patent".

We will hit upon documents that mention it again. We have presented documents in which Singer, in communicating with Gegauf, in the midst of these negotiations, which, as we say, had as a purpose the grouping of the [fol. 335] patents, September 12, 1957, which as to the exhibit that we are presently reading from, was about two months before—Singer points out to Gegauf that its United

States Harris Reissue application was about to issue. Singer says "We also anticipate within the near future that there will be issued to us a number of other United States patents relating to ornamental stitched sewing machines"—and I am reading from Government's Exhibit 54.

We still say, your Honor, that it is—and we believe we have been as consistent as we know how, but it is the grouping of the patents in Singer, the pooling of the patents in Singer, that the patents involved were those acquired, Gegauf 1, Gegauf 2, Singer's other patents to which it referred in the exhibit, from which I just quoted, for the Harris Reissue, and what ultimately became the Johnson patent and what ultimately became the Perla patent.

Shall I proceed, your Honor?

The Court: Yes.

Mr. Elkins: Some time after the receipt of the letter just referred to from Mr. Kirker, the executives of Singer decided that Mr. Stanford had best go to Switzerland and [fol. 336] attempt there to finalize an agreement with Gegauf.

Exhibit No. 57 is a memorandum prepared for the purpose by Mr. Lightner, an executive of Singer, who at the time was president of Singer.

In Exhibit No. 57, which is the covering letter to the memorandum, he states "I am distributing this rough draft with a view to helping to get policy formulated for Mr. Stanford on Friday and I would be obliged if each of you would try to read this over and be prepared with your own suggestions as to any different sort of procedure that you feel he might follow".

This memorandum was circulated to Mr. Kircher, vice president of Singer, Mr. Waterman, vice president, and Mr. Bruder, vice president—and a copy was sent to Mr. Stanford, and the communication was read and approved by all, according to the covering memorandum.

On the first page of the memoranda, which is dated November 29, 1957, Mr. Lightner states:

> "The main purpose of Mr. Stanford's trip will be to obtain such control of the Gegauf patent applications in the United States as will put us in a position to own and control it in order to get the very best patents and

bar import or United States production of mechanisms [fol. 337] which would violate these patents."

Here Mr. Lightner is talking of patents of Gegauf and he is using the plural—as indeed he should. It is two separate applications which will result in two separate inventions.

We note in this memorandum that it is fair to conclude—it sets forth the main purposes of the acquisition of the patents, and that if a purpose is not here, it just did not exist as a main purpose.

We notice as well as being interested in barring imports, that Singer, who, as we say, is the only manufacturer in the United States, also intends to buy them for the purposes as stated by Mr. Lightner, of preventing United States production of mechanisms which would violate these patents, these two patents.

So far as the Sherman Act is concerned, as your Honor knows, an exclusion of a competitor is no different then keeping a competitor out, and Singer being the only manufacturer here in the United States, is here keeping competitors out—at least of the machines covered by the patents in question—and that appears to be one of its purposes.

The Court: You say that that purpose is unlawful, that [fol. 338] is sought to be accomplished by the acquisition of a patent?

Mr. Elkins: Yes, your Honor. We say that the acquisitions of patents may result in an unlawful monopolization, or we say that the acquisition of patents may be an attempt to monopolize—that is true, your Honor.

At the bottom of the page Mr. Lightner writes:

> "Evidently, Gegauf has stiffened on price and we may have to pay as much as about three times the original figure. While this may seem high, yet over the years ahead the payment of such a price may well be justified by our having the ability to stop import of very low priced multi-cam machines, not only as a result of the help that we would have in the U.S. market in preventing such import, but also because inability to enter the U.S. market may discourage some people from entering the field, and raise unit costs in

the case of those who do produce such machines for other markets."

At the bottom of that page he continues, after the memorandum note that Singer decided that if possible it should try to get Gegauf to refuse to give any licenses to any [fol. 339] European manufacturer—and Mr. Lightner continues: "While these efforts must be made and while one might expect that for $100,000 or $125,000 Gegauf would give this added protection to us, yet if we are not successful in that endeavor, it would seem as though the ability to exclude this kind of Japanese machine may be worth even this high a price.

"If Bernina is to continue to have the right to send machines into the United States and if they consider that right important, they may very well see the wisdom of enabling us to stop other imports from Europe as well as those from Japan."

We say that it is clear from that, your Honor, as reflected also by other documents, that the idea of the assignment which exists mutually between Singer and Gegauf is the use of the patents to exclude the Japanese products—and that that certainly is the full mind of Mr. Gegauf.

The Court: It speaks of "other imports from Europe as well as those from Japan".

Mr. Elkins: That is right.

The Court: I see.

Mr. Elkins: Indicating that——

The Court: Indicating that they want to assert it against [fol. 340] more than merely Japanese, eh?

Mr. Elkins: Yes, your Honor—and if I may say so, indicating that the essence of the conspiratory is the exclusion of persons dealing in the Japanese machines, and that they are here trying to prevail or thinking of prevailing on Gegauf to allow them to use the patent against Europeans as well.

On page 4 of this memorandum Lightner writes: "Mr. Bruder offered the suggestion that Singer might agree to taking a certain number of machines and marketing them in the U.S., this suggestion being put forward with the idea that it might help to eliminate licenses to anybody

else and also eliminate Bernina imports to anyone other than ourselves."

• • • • • • • • •

At the bottom of the page, Mr. Lightner continues, speaking of this suggestion of Mr. Bruder, and states "In determining whether to broach this idea in the course of [fol. 341] negotiations, it must be remembered that getting control of the patent is the main objective, with the elimination or curtailment of European import as an important but secondary objective, and that with respect to these objectives, the idea of our purchasing any Bernina machines to be supplied to us under our own chosen trademarks and in our chosen color • • • and possibly with changes in design, for which we would pay, is an idea that should be utilized only if it appears to be likely to help the negotiations."

Exhibit 58, your Honor, is the agreement that was entered into between Singer and Gegauf, and it provides at the bottom of the first page "Whereas, Gegauf has as of the day and year written above assigned to Singer, its successors and assigns, for the territory of the United States of America, the entire right, title and interest in and to United States patent application Serial No. 358,377 filed May 29, 1953, and to the inventions disclosed therein and to an application divided out of said application Serial No. 358,377 and filed at an unknown date just prior to the present agreement, or about to be filed, and in and to any and all United States patents which may be granted therefor and in and to any and all extensions, divisions or [fol. 342] reissues of such patents, and Gegauf is desirous of acquiring therefor, in return for the territory of the United States of America, a non-exclusive, non-transferable and royalty-free license to sell sewing machines as disclosed in the said United States patent applications and made in their own factory in Switzerland".

• • • • • • •

[fol. 343] Government's Exhibit No. 62 is dated December 13, 1957, to Mr. Kircher, vice president of Singer, by Mr.

Stanford—with copies to various other executives of Singer. Mr. Stanford states:

"Enclosed is the original and 4 copies of a memorandum setting forth in narrative form the events that transpired during my recent trip to Switzerland.

"If my memory serves me correctly, these facts are set forth in the order of occurrence. The object is to try and give the reader a clear understanding of when and how the offer made by Bernina came about."

[fol. 344] On the first page of the memorandum, in the second paragraph, Mr. Stanford writes:

> "At 2:30 I visited Mr. Kirker's office and questioned him minutely about everything that had occurred during his recent negotiations with Mr. Gegauf, also as to any side remarks that Mr. Gegauf may have made during the negotiations that Mr. Kirker had with him. After quite a lengthy discussion and a reexamination of our original agreement with the Bernina Company, it was concluded that the best way to handle this matter was to call Mr. Willi, the patent counsel for Bernina, at his office in Zurich, and request that he contact Mr. Gegauf saying that I was in Switzerland and that Mr. Kirker and I were quite anxious to have a conference with Mr. Gegauf as soon as possible and suggest Wednesday as the day of the conference."

We notice, upon the arrival of Mr. Stanford, he discussed with Mr. Kirker things that occurred during the Kirker negotiations with Gegauf and, as Mr. Stanford says, he "questioned him minutely about everything." He goes on to say that he even questioned him as to "any side [fol. 345] remarks that Mr. Gegauf may have made."

One of the previous exhibits stated that during these Kirker-Gegauf negotiations they started off with, as Mr. Kirker explained, "Mr. Gegauf explained first that he has no objection against the idea of making an agreement with Singer in order to stop, as far as possible, Japanese competitors in the United States market." Obviously Mr. Kirker filled Mr. Stanford in, if he had to, in relation to all of that material, and we will see that there is no dis-

avowal of this idea of an agreement between Singer and Gegauf pertaining to these patents.

On page 3, the last paragraph, Mr. Stanford goes on to state:

> "Rather than approach Mr. Gegauf as a humble petitioner with hat in hand, I immediately seized upon a statement made to Mr. Kirker, at a previous conference, to the effect that the Japanese ornamental stitch machines would be sent into Europe if they were stopped from being sent into the United States because Bernina did not have broad patent protection in Europe. I intimated that this was a surprise to us for we [fol. 346] expected Bernina to have patents in Italy, Germany and Switzerland which would fully protect Bernina and Singer, and that it was very difficult for us to appreciate that it was only in the United States that they expected to obtain any substantial patent protection. I continued to drive this point home and asked if they knew of any publications, facts or machines of which we had no knowledge. I then asked them such questions as:
>
> "Why no action had been taken in Italy in reference to their Italian patent;
>
> "What set of circumstances caused them to abandon much of the protection that they should have been able to obtain in Switzerland; and
>
> "Whether or not their patent application which had been published for opposition in Germany was being opposed by a third party."

Our only point in referring to that, your Honor, is that Stanford, as a representative of Singer, is indeed talking with Gegauf and asking Gegauf for something—that is what would appear on the very thin—surface—and that he [fol. 347] is, indeed, a petitioner with hat in hand, as he put it, and yet we understand or we see here that he took the offensive, became aggressive in his negotiations with Mr. Gegauf, pointing out that it was a surprise to us that Gegauf patents were not, in the opinion of Gegauf, sufficient to stop the Japanese over there to the extent that they could be stopped in the United States, for, he says, "We

expected Bernina to have patents in Italy, Germany and Switzerland which would fully protect Bernina and Singer," and he continues, he says, to drive home the point. Obviously there is something there between Singer and Gegauf which relates to Gegauf assisting Singer in Europe in relation to patent suits.

On page 6, the last paragraph, he writes:

> "Young Mr. Gegauf further argued that if the United States patent were assigned to Singer and if Singer was successful in stopping certain types of Japanese ornamental stitch machines from being shipped into the United States, it would merely divert such machines into Europe and as a consequence Bernina would have still more competition in Europe, [fol. 348] and as a result of the increase in competition in Europe, Bernina, would have a substantial loss of business. To this argument I took the position that the United States was really the first line of defense and that if the Japanese were permitted to flood the United States market with ornamental stitch machines of the Bernina or Class 401 type they would become so strong and production would be so great that they would enter the European market in a stronger position. I further stated that protection was to be obtained in some of the foreign countries by Gegauf and it seemed that a greater risk would be involved if they did not permit Singer to try and reduce the importation of the multiple-cam machines into the United States."

We cite that material for the particular purpose of indicating that the United States is, as Stanford stated to Gegauf, the first line of defense, and the idea is presented there that, if the Japanese sewing machine industry is weakened or limited in one country, it would be weakened in other countries as well.

On page 7, Mr. Stanford continues and says:

> [fol. 349] "Mr. Gegauf's daughter put in her appearance shortly before this time and she and her father finally persuaded her brother that possibly it would be better to give Singer an opportunity to try to cut down

the importation of multiple-cam machines into the United States."

On page 9, if your Honor please, in the fifth line down, Mr. Stanford continues and says:

"Throughout the entire negotiations I had tried to drive home the point that the Brother Pacesetter machine" (and here we would like to say parenthetically that that is a Japanese-made machine) "was a free-arm zigzag machine and that Singer did not have a comparable free-arm machine to sell. Consequently, the Brother Japanese machine was in direct competition with Bernina and not with Singer. During the negotiations I continued to point out various ways that the competition in free-arm machines might be reduced as well as the competition in flat-bed machines and as a consequence Gegauf would be in a position to profit from this fact more than Singer."

[fol. 350] We mention that particularly as it points out that the Brother Pacesetter machine is not comparable to any Singer machine and that the particular benefit of any suits against the Brother Pacesetter machine would, according to this, inure to the benefit of Gegauf more than to the benefit of Singer. That is all in that document, if your Honor please.

* * * * * * *

[fol. 351] Government's Exhibit 66 is a referral slip from Mr. Waterman to Mr. Stanford. It attaches to it a letter to Mr. Waterman from Mr. Gegauf. The letter is dated July 25, 1958. This letter, on the first page, indicates that Mr. Gegauf recently had the opportunity to discuss the matter of Japanese imports in Europe with several direc-
[fol. 351a] tors of the Pfaff Company, and also with directors of other German sewing machine factories. He then goes on at the bottom of the page to say:

[fol. 352] "I told to these gentlemen that according to my opinion it will be very difficult to do anything against the Japanese, as long as the European sewing

machine manufacturers undertake everything to open the doors to the Japanese, especially as regards the supplies of automatic zigzag sewing machines similar to proved European constructions. Several European, especially German manufacturers, try with all means to bring to fall the patent applications of my company. Above all I mean the Bernina automatic. I hope to be able to induce those firms, which made interference against our application, to withdraw their interference under certain conditions."

Mr. Gegauf goes on to say:

"During a discussion with Mr. Heimann of the Pfaff Company he asked me whether I believe that also the Singer Company would be prepared to help that a further gaining ground of the Japanese machines on the European market be prevented in respect of patent rights. As it seems people know already that a patent arrangement was reached between the Singer Company and the Bernina and that friendly connections are existing between our Companies, I was asked to sub- [fol. 353] mit you the aforesaid question. I did not mention, of course, that you intend to proceed against the Japanese on the basis of your patents and ours, what happened already in the meantime. According to my opinion, the Japanese can be hit only if we succeed in preventing their manufacture of proved and well accepted constructions for reasons of patent rights. You are on the right way with your suit.

"I should be very glad to discuss this matter when you will come again to Europe and to know your opinion."

We say here that on the page 2 from which we have just read Mr. Gegauf not only infers an agreement between Singer and himself but expresses it pretty well. In speaking of the Pfaff Company, he stated that Mr. Heimann of Pfaff, which, incidentally, is of Germany, asked him whether he believed that also Singer would be prepared to help that a further gaining ground of the Japanese machines be prevented in respect of patent rights, indicating that

there is already such an agreement and that Mr. Heimann of Pfaff is looking for an agreement to take care of a further gaining ground.

He goes on on this page and says, speaking of his con- [fol. 354] ference with Mr. Heimann: "I did not mention, of course, that you intend to proceed against the Japanese on the basis of your patents and ours, what happened already in the meantime." Mr. Gegauf, when he says "What happened already in the meantime," is saying that it has happened since he had his conversation with Mr. Heimann of Pfaff, and he indicates, too, that at the time of this conversation with Mr. Heimann of Pfaff and before he was notified of the Singer suits against the Japanese, he knew—and, indeed, we say of course he knew—to use his words in speaking to Singer, that Singer intended to proceed against the Japanese on the basis of its patents and Gegauf's, and Mr. Gegauf, in stating it, states it pretty well, perhaps just about as well as we could. The difference is that coming from Mr. Gegauf it is not a mere allegation; it is an admission.

In Government's Exhibit 67 the Singer Patent Department indicates its appreciation of the idea of grouping patents, and Government's Exhibit 67 is a letter from the Patent Department to Mr. Waterman dated January 28, 1957, and it attaches a Patent Department report. On the first page of the report, in the second paragraph, it states:

> [fol. 355] "Steps were taken to strengthen Singer's patent position in the United States for multiple cam zigzag stitching machines by concluding an agreement with Fritz Gegauf A.G. of Switzerland, makers of the well-known Bernina sewing machine, whereby a basic United States patent application relating to such machines was assigned to Singer. Patents issuing on this application grouped with other Company patents should put Singer in a better position in any attempt to prevent others from importing into the United States multiple cam machines of the Singer class 401 type."

We say, your Honor, that all of that material indicates an agreement, a conspiracy, an unwritten agreement between Singer and Gegauf, and, indeed, we say that the material manifested even to obvious proportions, including,

as it does, even a statement from Gegauf himself after the assignment in which he describes the arrangement between Singer and Gegauf almost in legalistic language and, certainly, so as to parallel the allegations of the government here that this conspiracy involved a grouping of patents in Singer, the Gegauf patents transferred to Singer, grouped with their own patents, which, as Gegauf says, [fol. 356] would then be used to attack the Japanese product.

Now, as we understand it, the defendant says there is no unwritten agreement between the parties, no conspiracy between Singer and Gegauf. As we understand their position, they say merely that the only agreements are those that are written, those that can be hit with a brick, and that beyond that——

The Court: Those that were paid for in dollars and cents, with good American money, $85,000.

Mr. Elkins: For these patents?

The Court: No. The Gegauf agreement was bought and paid for at arm's length bargaining.

Mr. Elkins: They did pay, your Honor, $90,000 to Gegauf for the Gegauf patent applications with the understanding, as Gegauf just said in the document that I just read, that the patents of Singer and Gegauf now being in Singer would be used by Singer in launching patent attacks upon persons dealing in the United States with the Japanese-made machines.

That there is a conspiracy which covers those terms, we say, is made manifest and, indeed, obvious by these various communications between Singer and Gegauf and communications of an intra-company nature between the Singer officials that, after this assignment from Gegauf to [fols. 357-358] Singer, Singer, in accordance with that agreement, is required to use the patents it obtained from Gegauf together with its own in proceeding or in launching patent attacks against the Japanese.

In view of all of this written material, the existence, we say, of that agreement is quite open. Singer, if it did anything else, would not only be violating that conspiracy, it would, indeed, be guilty of a substantial act of treachery as far as Gegauf is concerned. Singer is required, as a result of all of the evidentiary material to which we

have referred, not to grant any license under a Gegauf patent to a company or United States importer dealing in a Japanese machine, it is required not to grant any such license under a patent which it has discussed with Gegauf to any person dealing in a Japanese-made machine, and, as we have tried to say before, the evil created is the grouping of the patents in Singer where each of them, according to the cases, takes on an extra strength which, standing alone, they would not have had.

* * * * * * *

[fol. 359] Mr. Weinstein: May it please the Court, your Honor, the first group of documents that I will address myself to are the documents which relate to what is generally referred to as the Messerschmidt transaction. The government believes that these documents are relevant to show the acts of a co-conspirator in acquiring patents for the use of foreclosing a competitor pursuant to the common design, namely, excluding Japanese-made machines. In this regard it is relevant to the charge of a conspiracy to restrain trade under Section 1 of the Sherman Act and to a conspiracy to monopolize under Section 2 of the Sherman Act.

In addition, this is an act of a dominant United States manufacturer which shows its attempt to monopolize which is accomplished by buying patents or attempting to buy patents for the purpose of excluding competitors. This, we say, goes to our allegation that the Singer Manufacturing Company has attempted to monopolize a part of trade or commerce in violation of Section 2.

In addition, there are certain other points that are clearly brought out by these documents. One is that Singer had as an alternative in its relationship with Messerschmidt [fol. 360] the opportunity to oppose Messerschmidt's applications in Europe; two, that Singer bought and attempted to buy other patents other than the Gegauf patents for the purpose of excluding Japanese competitors; and, three, these documents, I believe, conclusively show the aggressive nature of Singer in attempting to exclude competitors.

A reference to the statement of facts, your Honor, namely, Nos. 42, 43 and 44, indicates that in July of 1955 Singer was preparing to manufacture in the United States and Scotland its 319 machine which was the subject of its Perla

patent application. At that time Singer became aware of a similar Messerschmidt machine and Singer began searching for indications of a corresponding Messerschmidt patent application.

The first document, your Honor, is Government's Exhibit 69 which is a letter written by Mr. Stanford, head of the Singer Patent Department, to Mr. Adamson who was head of Singer in Germany. This letter is dated January 19, 1956, and Mr. Stanford states:

> "We are all well aware of how serious and complicated the patent situation is in Germany and most of the important industrial countries of the world. In [fol. 360a] Germany we have an opportunity to oppose the claims of applications before the application is finally issued. This is an advantage that we do not have in many countries."

[fol. 361] We merely introduce this document to show that there is an alternative to entering into agreements which would assure all broad claims. If a party is threatened with a serious patent position of an opponent in another country, he may well seek to oppose that patent.

The next document, which is dated March 15, 1956, written about three months after the previous document, is merely introduced to show that the 319 machine was similar in construction to the Messerschmidt machine and that the Perla German application owned by Singer had been held in abeyance by the German patent examiner. This is a letter from Mr. Stanford of Singer's patent department to Mr. Adamson of Singer Germany, where he states:

> "We would appreaciate it if you would contact Dr. Wiegand and ask him to please obtain any and all information possible concerning the possible filing by Messerschmidt of patent applications directed to sewing machines having multiple cams, any one of which may be selected to control the vibration of the needle bar.
>
> "This has been made more important by a recent [fol. 362] communication from the German patent examiner in which he stated that action on their Perla application S 46,580 (319 machine) is being held in abey-

ance because of a prior filed German application which he has before him."

The next document is Government's Exhibit 68 which was written during the last week of April 1956 by Mr. Stanford to Mr. Williams of Singer's patent department. This letter indicates, your Honor, that Mr. Stanford had found a Belgian Messerschmidt patent which appeared to predate Perla and Johnson, and he states on page 2 of this handwritten note:

"At least we appear to be ahead in the United States. We see the Messerschmidt people may be willing in Frankfort next week."

He continues on and says:

"With this knowledge, what should we do in the United States? Both France and Switzerland say they must have cylinder bed m.c. to compete."

Your Honor, m.c. there refers to multiple-cam machines. Then he phrases an important question:

"Does this make Messerschmidt a good buy?"

[fol. 363] And his closing comment, on the last page of this letter, your Honor, is:

"Belgium full of Japanese machines, all kinds."

Your Honor, I now refer to Government's Exhibit 28 to which Mr. Elkins has referred previously. I might add at this point that the transactions that I address myself to now overlap chronologically with the Gegauf transactions, so in some cases documents refer to both Gegauf and Messerschmidt.

This is a letter, your Honor, which is written on April 30, 1956, a few days after the letter I just read. The letter is from Mr. Stanford to Mr. Williams and Mr. Breen of Singer's patent department, and we offer this letter, your Honor, to show Singer's priority in the United States with

respect to the subject matter of the Messerschmidt patent application. He states:

> "Enclosed is the Belgian patent of Messerschmidt. Have finally concluded that they filed automatic cam feature on November 25, 1954. Topped again by a few days. Sho is hell, but it seems to me that we have them in the United States. Could be much worse."

He continues on, your Honor, and says:

> [fol. 364] "Enclosed also is a copy of drawing of Messerschmidt's recent Italian patent on feeding mechanism."

And towards the end of the letter he states:

> "Saw the Messerschmidt people today. They don't want to sell the sewing machine business."

And the concluding statement of the sentence is:

"Think we should push U. S. Perla 319 multi-cam application like hell. Do you agree? Bell has been believing they are ahead. They have term contracts with Bell and others."

I think a few things should be mentioned here, your Honor. Bell, as I understand it, relates to Bell Messerschmidt, a distributor of Messerschmidt in the United States at the time this letter was written.

I mentioned the fact that they say "Enclosed also is a copy of drawing of Messerschmidt's recent Italian patent on feeding mechanism."

The Messerschmidt patent applications, your Honor, in the United States and their corresponding applications and patents in Europe related not only to the subject matter of the 319 machine but also to the subject matter of using [fol. 365] a series of cams each with its own follower, not to control the needle bar or the zigzag pattern but to control the feed of the material through the machine. So in essence, Messerschmidt was prosecuting an application which could be said to conflict with Perla but also had claims going far

beyond anything Singer had patent applications on or was presently or contemplating manufacturing.

Your Honor, the next document is Government's Exhibit 71 which is another handwritten note from Mr. Stanford to Mr. Williams dated April 27, 1956. In this document Mr. Stanford states, and this was written from Europe:

> "I have given much thought to the Messerschmidt situation. It seems to me we should push the U. S. Perla case to the limit. If you agree, let us go. As far as I can see, Messerschmidt's filing date in Germany is November 25, 1954. I feel quite sure of this as we can establish our superiority in the United States.
>
> "While Messerschmidt said they were willing to be friendly and negotiate, it is my impression that they will do so only when they have a gun in their back. Anyway, I am not so sure we need them or that we [fol. 366] will wish to negotiate. Maybe we can push them out of the sewing machine game. They admit they have no time to give it but want to hang on. Apparently Bell has quite a contract with them."

Again, Bell refers to Bell Messerschmidt, the American distributor for Messerschmidt machines.

Later on in that note, just to indicate the corresponding negotiations with Gegauf, he states:

> "Had letter from Gegauf yesterday but he didn't say anything about assigning his U. S. application to us."

The next government exhibits are 72 and 73. In response to the question in Government's Exhibit 68 as to whether or not Messerschmidt was a good buy, Mr. Williams cabled Mr. Stanford twice on April 30, 1956. The first cable was Government's Exhibit 72, your Honor, and it reads:

> "Messerschmidt might be stopped in Germany and other countries by proper claims in applications corresponding to Vigorelli Italian Patent 507,862 filed September 29, 1953. This patent is first to show and claim two cams tracked by a follower means during a single stitching cycle."

[fol. 367] Apparently on the same date, your Honor, Mr. Williams again cabled Mr. Stanford:

> "Purchase of Messerschmidt for patent reasons only not justified if German applications of Gegauf and Vigorelli contain claims dominating Messerschmidt. Figures 9 and 17 of Gegauf Italian Patent 501,172 and all figures of Italian Vigorelli Patent 507,862 would support different coexisting claims dominating Messerschmidt."

Your Honor, at this date, April 30, 1956, Singer had already entered into a cross-licensing agreement with Vigorelli and had two weeks previously entered into its cross-licensing agreement with Gegauf.

Your Honor, is it convenient for the court to take a recess at this time?

The Court: Yes. We will return at 2.15.

(Recess until 2.15 o'clock p.m.)

[fol. 368] Afternoon Session

2.15 P.M.

Mr. Weinstein: Your Honor, the last documents we discussed were the two telegrams written by Mr. Williams to Mr. Stanford on April 30th concerning the possibility of Singer being able to——

The Court: Exhibits 72 and 73.

Mr. Weinstein: That is right.

Now Exhibit 74 is placed in evidence for two principal purposes: one, to show the relation of Singer's 319 machine and the Messerschmidt machine, and also to show that Messerschmidt suggested that a licensing agreement would be in the best interests of both.

On May 25, 1956, Mr. Adamson, Singer's representative in Germany, wrote to Mr. Waterman stating, on the first page:

> "We had today a visit of Mr. Busselmeier, the patent agent of the Messerschmidt A.G. of Augsburg and the chief designer of that company, Mr. Brandt, who had come to inspect the class 319 machine you have sent us for this purpose.

After only a short inspection both gentlemen said that the design of the automatic unit of this machine [fol. 369] is the same in principle as theirs."

On the same first page the second paragraph from the bottom, Mr. Adamson states:

"As a result of today's inspection of the class 319 Machine Mr. Busselmeier believes it necessary that Mr. Stanford and he meet again as soon as possible and that both put those patent applications on the table which they believe to be infringed by the other party's design.

"Mr. Busselmeier thinks that an amicable settlement will be in the interest both of the Singer and the Messerschmidt Companies because quite a number of other competitors would profit by a dispute which would partly destroy or narrow the claims of either the Singer or Messerschmidt patents."

The next document, your Honor, was written just about a month later—I am sorry, about three weeks later—June 12, 1956. Mr. Lando of Singer's company in Italy wrote to Mr. Stanford—and this letter is dated June 12, 1956, and he states—well, at first he discusses a report which Italian patent attorneys were sending to Singer concerning the coverage of the Messerschmidt patents and he states [fol. 370] "We have little to add to this report. A possibility of Messerschmidt to start a legal case in Italy in defense of his patent exists and we hope that the report will help you to decide whether or not it would be advisable to include Messerschmidt amongst the signers of the non-aggression pact."

On July 13, 1956, your Honor, Singer's attorneys in Scotland wrote to Mr. Williams of their Patent Department——

Mr. Pettit: Your Honor, may I raise a point here? I believe that this document has been excluded.

The Court: I sustained the objection to this, according to my notes, on 76.

Mr. Weinstein: I am sorry, your Honor, I did not take that down.

The Court: On May 3rd—whatever day that was—that was the day I ruled on it and sustained the objection.

The Clerk: That was Wednesday of last week.

Mr. Weinstein: I am sorry, your Honor, I failed to remove it from my set of documents.

The Court: Mr. Weinstein, all these Messerschmidt patents are foreign patents, aren't they?

Mr. Weinstein: No, your Honor. At this point Singer [fol. 371] is principally concerned—the documents I am relating to here relate to Messerschmidt's American application. We will come to Messerschmidt's foreign application at a later day.

The Court: All right.

Mr. Weinstein: On July 16, 1956, Mr. Williams wrote to Mr. Adamson of Singer in Germany, stating that he believed that Singer and Messerschmidt would soon be engaged in interferences. Singer wrote:

> "We now have good reason to believe that Messerschmidt has received, or will within the next several weeks receive, word from its United States attorney that its United States patent application relating to its automatic multiple-cam zigzag sewing machine interferes with an application owned by an unnamed adversary. Messerschmidt no doubt will realize its opponent is Singer. We further believe that Messerschmidt will be given 30 days to indicate to the United States Patent Office whether it wishes to enter or withdraw from such an interference. We presume that it will enter the interference."

On the second page he goes on to state:

> "I would suggest that you advise Mr. Busselmeier [fol. 372] that I can see no reason why an amicable settlement of this entire matter cannot be reached."

And his closing sentence is:

> "Upon learning of the present conflict in the United States Patent Office we hope that Mr. Busselmeier will be stimulated into making further inquiries of you as to our intentions."

Your Honor, I think this document should be related back to Government's Exhibit 74 when Mr. Busselmeier first suggested that an amicable settlement would be in the best interests of both parties because only competitors would benefit from any other settlement.

Now your Honor, after this letter was written, an interference was declared between the Singer application, namely, the Perla application and the Messerschmidt application—and this occurred on September 17, 1956.

The next exhibit, Government's Exhibit 78, we put it in here principally to show the continuing nature of the Singer-Messerschmidt negotiations.

This is a letter written on November 2, 1956, from Mr. Waterman, vice president of Singer, to Mr. Lightner, then president, and which was three and a half months after the previous document, after Government's Exhibit 77, and it [fol. 373] is, as I say, in here just to show Singer's continuing interest.

The first paragraph states:

> "Mr. Stanford and I had been waiting anxiously to hear from the attorneys for the Messerschmidt Company, and in fact on Monday of this week we discussed what our next action should be if we did not hear very soon. However, the day following, Mr. Stanford received a call from the Washington attorneys of Messerschmidt advising that they would like to talk with us, and on Thursday a representative came to New York and went over the situation with us. We learned that they had already advised Bell that it was in its interest that Messerschmidt should sign the patent agreement with us and that, as a result, Bell had sent a letter to Messerschmidt indicating its approval of this action."

* * * * * * *

[fol. 374] The Court: Am I correct in recalling that Messersehmidt is not charged in the complaint with being one of the alleged co-conspirators?

Mr. Weinstein: That is right, your Honor.

[fols. 375-379] The Court: Am I correct in my understanding that in all the dealings between Singer and Messerschmidt, neither Vigorelli not the other German Company, Pfaff, were parties?

Mr. Weinstein: That's correct, your Honor.

The Court: And that this dealing was one entirely between Messerschmidt and Singer in which nobody else participated, or was otherwise connected either with the conspiracy that is alleged or with the Gegauf or Vigorelli patents?

Mr. Weinstein: I think I indicated at the beginning, your Honor, that the purpose of the Messerschmidt documents——

The Court: No. Am I correct in my belief or understanding that that is a fact?

Mr. Weinstein: Yes, that's right, your Honor.

• • • • • • •

[fol. 380] On January 3, 1957, your Honor, in Government's Exhibit 85, the Patent Department arranged through its attorneys in Scotland, Cruikshank & Fairweather, stating:

> "This will advise you that as yet Messerschmidt has not seen fit to execute with Singer an agreement under which each party would be free to manufacture and market in all countries of the world its ornamental stitch zigzag machine."

Singer continued, your Honor, for some months attempting to enter into an agreement with Messerschmidt, and on December 11, 1956, a letter from Mr. Stanford of the Patent Department to Vice President Waterman, he writes, and I quote:

> "However, the recent Singer-Vigorelli and Singer-Bernina patent agreements make it possible for Singer freely to manufacture and market the Class 401 machine under the Vigorelli and Bernina Patents."

[fol. 381] On the second page, speaking with respect to the 319 machine he states:

> "As in the case of the Class 401 machine, the Singer-Vigorelli and Singer-Bernina patent agreements permit us freely to operate under the Vigorelli and Bernina patents and patent applications."

He continues to state that:

"In the United States the corresponding Messerschmidt patent application is now locked in interference with the Singer patent application which relates to the Class 319 machine and we expect to prevail in this interference to the end that Singer will be awarded patent claims which will cover our Class 319 machine and which will be infringed in the United States by the comparable Messerschmidt machine.

"Other than those owned by Bernina, Vigorelli and Messerschmidt, we know of no additional adversely owned patents or patent applications which would be infringed by the Class 319 machine."

[fol. 381a] On page 4 of this document, a statement is found, your Honor, which reads:

"In addition Bell and Messerschmitt undoubtedly realize that they will lose the United States patent interference with Singer with the result that they could in the near future be confronted in the United States with a patent infringement suit based on several Singer-owned patents."

[fol. 382] The negotiations continued, your Honor, and on April 16, 1957, Singer did enter into a cross-licensing agreement with Messerschmidt, and that agreement is Government Exhibit 86. Attached to that exhibit are certain patent drawings. Does your Honor have copies of those?

The Court: I have no drawings attached to this exhibit. I simply have the two-page agreement.

Mr. Weinstein: Here is an extra copy, your Honor (handing).

I asked if you have the drawings because the agreement relates to them, and the subject matter of the agreement can only be gleaned from the drawings.

The agreement is dated April 16, 1957, and in paragraph 1 it states:

"Singer will not bring any infringement action against Messerschmidt under the rights derived from patents now issued or to be issued in any country with respect to subject matter disclosed in the annexed

drawings KL52KE of 14/1/55, KL53KE of 10/7/54 and KL54KE of 6/6/55 and when embodied in sewing machines manufactured and sold by Messerschmidt."

[fols. 383-385] These references to drawings 52, 53 and 54 indicate the scope of a license which Singer granted to Messerschmidt. 52 relates to a manual zigzag machine. 53, I believe, your Honor, relates to a straight stitch machine. 54 relates to the Messerschmidt multi-cam zigzag machine which was similar in scope to Singer's 319 machine. So in essence Singer was granting a license under three different types of machines.

The Court: But none of them were the 401 type, were they?

Mr. Weinstein: That's right, your Honor.

. . . . . .

[fol. 386] The Court: I know. But your expression that Singer wanted to prohibit the importation of machines which were like the 401 does not sound like a statement of one who is experienced in the law of patents, as I know you are. You don't try to assert an infringement against something because it is simply like something else unless it embodies the basic invention.

I have had a most difficult time in this case thus far in trying to find out just what the government's claim is here.

Mr. Weinstein: Your Honor, our contention is that Singer sought to exclude Japanese machines of the machine carried multi-cam type.

The Court: And that it sought to accomplish that exclusion by asserting the Gegauf patent against these Japanese importations.

Mr. Weinstein: That was one patent covering a machine carried multi-cam machine, your Honor.

The Court: Do you say that Singer could have success-

[fols. 387-388] fully asserted infringement against these Japanese machines alleged to have infringed 401 without the Gegauf patent?

Mr. Weinstein: On the basis of the Harris patent, your Honor, they certainly could have made a strong argument that they also infringed.

The Court: We are not talking about strong arguments.

I have been listening to two very able lawyers make strong arguments here, you and your associate, and I admire your legal ability very much, both of you, but I cannot find out yet what this case is about.

Suppose I start this way: Is there any other machine involved in this suit other than the 401 that embodies the Gegauf patents?

[fol. 389] The Court: Is there any other Singer machine in this suit other than the 401 which embodies or applies the Gegauf No. 1 patent?

Mr. Weinstein: No, your Honor.

. . . . . .

[fol. 390] Mr. Weinstein:

. . . . . .

I have indicated that Singer, in its licensing agreement with Messerschmitt, has given it essentially a license under three machines, a manual, a straight stitch and a multi-cam machine. Messerschmitt in turn, your Honor, states:

> [fol. 391] "Messerschmitt will not bring any infringement action against Singer under the rights derived from patents now issued or to be issued in any country with respect to the subject matter disclosed in Singer's German patent applications No. S 46,453 as filed on November 23, 1955 and also in the annexed drawings, Figs. 1 to 62 and S 46,580 as filed on December 2, 1955 and shown in the annexed drawings, Figs. 1 to 13, and when embodied in sewing machines manufactured and sold by Singer."

On its face that is a little difficult to understand, and the next document clearly indicates that what that means is that Messerschmitt will grant Singer a license on both its Perla and Johnson machines. Those figures here, 1 to 62 and 1 to 13, refer respectively to the Johnson and Perla patents, your Honor, the patent applications.

The third paragraph states that Singer and Messerschmitt each agree not to institute in any country any opposition, nullity or invalidation proceeding against or otherwise to attack in any country the other's patents or

patent applications corresponding to Messerschmitt's con-
[fol. 392] structions as illustrated in the drawings indicated in paragraph 1 and to Singer's German applications indicated in paragraph 2, and to immediately withdraw any such proceeding if it has already been instituted, provided, however, that if such patents and patent applications are or have become involved in a Patent Office priority determining proceedings, such as a United States Interference or a Canadian Conflict proceeding, then both parties will work together in order to settle such proceedings in accordance with the laws and regulations of the Patent Office concerned, and in the spirit of this agreement.

Paragraph 5 of this agreement merely states that Messerschmitt, as designated in this agreement, shall be understood as including Messerschmitt A.G., its present and future subsidiaries, affiliated and associated companies, licensees and customers throughout the world.

Singer had no sooner reached an agreement with Messerschmidt which gave it freedom throughout the world to manufacture its 319 machine than did it consider the acquisition of the Messerschmitt patent. Your Honor, on April 17th, the day after the licensing agreement, Mr. Waterman [fol. 393] sent a cablegram to Mr. Lightner, the president of Singer, and in addition sent copies of it to Mr. Goosman, the vice president; Mr. Stewart, the vice president; and Mr. Kircher, the vice president, and in this telegram it stated, and I think it speaks unequivocally, your Honor:

> "Agreement signed 319 completely free same idea as with Vigorelli and Gegauf (stop) They will also assign United States patent rights and probably if we wish all pertinent foreign patents and applications we to license them thus giving us opportunity of prosecuting against others (stop) We will study foreign patent situation since they will bring maintenance cost but if of any value to restrict Japanese especially Brother will be very much worthwhile (stop)"

[fol. 394] Your Honor, I think it is significant to note that in this Exhibit 88, this cablegram, it is a memo written by Vice President Waterman to the president of Singer, sending carbon copies to three other vice presidents. They do not mention European competition as a secondary con-

sideration. They say "But if of any value to restrict Japanese especially Brother," then those patents will be worthwhile.

Mr. Pettit: Your Honor, I don't know whether I should rise to something that is plainly, palpably misleading.

The Court: No. Restrain your indignation. You can just make a little note of it on a yellow pad and you will have ample time to do it with much effectiveness later on.

Mr. Pettit: That is just completely misleading.

The Court: Now that you have expressed your indignation, just make a little note on your yellow pad. Thank you.

Mr. Weinstein: Your Honor, the very next day, in Government's Exhibit 87, a memorandum which was written by Mr. Waterman to Mr. Lightner is introduced to show, one, that the Messerchmitt Company was badly off financially and that Singer believed this to be the fact; two, [fol. 395] the nature and scope of the cross-licensing agreement, and, three, that Singer and Messerschmitt had discussed Messerschmitt's turning over all of their patents and applications to Singer which were involved in the present situation.

The third paragraph of this letter states:

> "The M.Co. is badly off financially. We gathered throughout the talks the impression they were anxious not to incur any more expenses in our interferences, present and future."

The last sentence on this page reads——

The Court: I guess there are a lot of German companies that in those days were a little bad off financially and since have done very well.

Mr. Weinstein: Apparently so, your Honor.

The agreement states, speaking of the April 16th cross-licensing:

> "They will take no action against any of our machines which have in them the features of the 319 Perla patent application anywhere in the world and also of the 401 Johnson patent application, likewise, although we do not believe this latter machine is in any conflict with their patents or patent applications, and that we [fols. 396-398] will take no action against their presently designed machines referred to very completely

in the agreement by drawing numbers under drawings initialed and made a part of the agreement, just as the Perla and Johnson patent drawings were likewise initialed and made also a part of the agreement."

The closing paragraph reads:

"The subject of M turning over all their patents and applications to us, and we licensing them, is quite involved and I will not go into it in this letter."

* * * * * * *

[fol. 399] Government Exhibits 93, 94, 95 and 96 are in evidence to show the culmination of this negotiation in the acquisition of the Messerschmitt application under which Singer already held a license.

In Government's Exhibit 93 Mr. Adamson wrote to Mr. Stanford of Singer's Patent Department on May 20, 1957, and states, speaking of a letter that he has sent:

"In that letter we informed Dr. Wiegand of the [fol. 400] wishes expressed by Mr. Busselmeier and his suggestion to meet Dr. Wiegand at either Frankfort or Munchen. We told Dr. Wiegand inter alia that you did in no case wish to give Messerschmitt the possibility of giving a license to anybody and that this should be limited as much as possible, and we also sent Dr. Wiegand copies of the correspondence and telegrams in order to post him fully. We asked him to study the matter and then let us know when a meeting with him and Mr. Busselmeir could take place so that our Mr. Kruger could, if desired, go to Munich if that town should be preferred to Frankfort."

On the second page of this letter, your Honor, Mr. Adamson goes on to state:

"In his letter to you of May 14th, Dr. Weigand has underlined that Messerschmitt is willing to accept a 'non-exclusive, non-transferable and royalty-free license' under U.S. Patent Application No. 548,481, but we wonder whether this 'non-transferable' will be of any practical value, seeing that in paragraphs 2

and 3 of the draft for new document (3) reference is made to the passages in the Agreement of April 16, 1957"—namely, their cross-licensing agreement—[fol. 401] " 'that Singer will not enforce any rights from any patents against Messerschmitt, its present and future. . . licensees throughout the world' and 'that the provisions of the said agreement . . . shall remain unaltered.'

"This would, in our view, include for Messerschmitt the faculty of granting licensees in the States also to other people than the Bell Portable Sewing Machine Company, for instance, and open the chance for Messerschmitt to give a license 'to anybody' a development which it has been your wish to avoid as far as we know and of which we have informed Dr. Wiegand."

In this next paragraph of the letter, your Honor, Mr. Adamson states the dual nature of the Messerschmitt application, not only that it contains subject matter which is common to the Perla application but contains subject matter which is entirely different and separate than subject matter which Singer is presently producing under. He states:

"We do not know whether your desire of preventing the grant of a license under U.S. Patent Application 548,481 or resulting patents by Messerschmitt 'to anybody' refers to the entire subject matter of the appli-[fol. 402] cation which, if we correctly remember, covers more than the similar Singer applications, or only to that surplus over the Singer applications. If that surplus is neither disclosed in the Messerschmitt drawings K152KE, K153KE and K154KE there might remain something 'non-transferable' under an agreement as per the 'Draft for new document (3)' otherwise it will appear to us that this term is void of any bearing. You may in that case probably want to try to get some modified wording accepted which will limit the range of possible future licensees."

I think this document indicates that, although Singer had already entered into an agreement with Messerschmitt and with respect to that agreement, insofar as Messerschmitt's

application contained material relating to the 319 machine, Messerschmitt might grant licenses, that Singer obviously wanted no licenses granted on the remaining subject matter which related to a cam mechanism for controlling the feed.

An answer to that letter, your Honor, was forthcoming on May 24, 1957, when Mr. Williams wrote to Mr. Adamson, stating:

> "In answer to your questions we would state that under the Singer-Messerschmitt agreement of April [fol. 403] 16, 1957, Singer agreed not to enforce against Messerschmitt or any of its licensees and customers any rights derived by Singer from any patents in any countries with respect to subject matter disclosed in certain specified Messerschmitt drawings which were annexed to the agreement. These drawings disclosed three existing Messerschmitt sewing machines of which none employs the automatic feeding mechanism which is disclosed in the Messerschmift U.S. Patent Application Serial No. 548,481 which forms the subject matter of the proposed new Singer-Messerschmitt agreement mentioned in the first paragraph of this letter."

He goes on in the next paragraph to state:

> "Under this agreement it is Singer's intention not to permit Messerschmitt to extend its license under application serial No. 548,481 to other parties.
>
> "In other words, although Messerschmitt in the United States has the right to make and sell machines of the type designated in the Singer-Messerschmitt agreement of April 16th, and to license any other parties to make and sell such machines in the United States, under the newly proposed Singer agreement, [fol. 404] Messerschmitt will have the right to make and sell in the United States on its own account machines incorporating the automatic feed of patent application serial No. 548,481, they will not be able to transfer such right to other parties."

An agreement was finally reached with Messerschmitt on June 4, 1957, and that is Government Exhibit 95, in which it states:

"Whereas Singer and Messerschmitt have agreed, by an agreement of April 16, 1957"——

and that is the cross-licensing agreement——

"number 1, that Singer will not enforce against Messerschmitt any rights derived from any patents in any country with respect to subject matter disclosed in the drawings 52, 53 and 54 annexed to said agreement, and Messerschmitt includes, according to No. 5 of said agreement, its present and future subsidiary, affiliated and associated companies, licensees and customers as far as the use of the sewing machines is concerned throughout the world."

[fol. 405] In the next paragraph, your Honor, Singer and Messerschmitt agree that the terms of that licensing provision shall remain unaltered.

And note on page 2 of this agreement, your Honor, that Singer does eventually grant Messerschmitt a non-exclusive, non-transferrable, royalty-free license under the patent application.

Exhibit 96, your Honor, is merely a formal assignment, your Honor, for recordation in the Patent Office.

Your Honor, the next documents we come to relate to Singer's desire, now that it has not only the license of Messerschmitt but also the assignment of Messerschmitt's patent application—Singer's desire to obtain all of Messerschmitt's foreign applications which correspond to its American application.

Government's Exhibits 97, 98, 99 and 100 clearly indicate what Singer had in mind, why they wanted these patents, your Honor.

Government's Exhibit 97, your Honor, is a letter written from the Patent Department to Mr. Wiegand—a letter written from the Patent Department to Mr. Wiegand, Singer's patent attorney in Germany. Mr. Stanford states:

"During the negotiations between the representatives [fol. 406] of Messerschmitt and Singer in Frankfort on April 16th, we indicated that we might be interested in acquiring the Messerschmitt foreign patents which correspond to its United States patent application Serial

No. 548,481. At that time the Messerschmitt representatives stated that they would consider assigning these patent rights to Singer in return for a license back to Messerschmitt.

"We have considered this matter further and have concluded that it would be advantageous for the Singer Manufacturing Company to own all of the Messerschmitt patents and applications corresponding to United States application Serial No. 548,481."

I call your Honor's attention to the fact that the licensing agreement that Singer had with Messerschmitt related to all countries of the world.

Government's Exhibit 98, your Honor, is a letter written by——

The Court: Why do you call that to my attention? What purpose do you have in mind?

Mr. Weinstein: Singer was perfectly free to sell their machines where they wished——

[fol. 407] The Court: We are not concerned with that in this case, are we?

Mr. Weinstein: It goes to their intent.

The Court: Isn't that a factor to be regarded in their favor, that they did not limit or restrict their market, that they did not interfere with the United States commerce by way of exports?

Mr. Weinstein: I am not quite sure I understand your question, your Honor.

The Court: Well, had Singer agreed to stay out of foreign markets it might become important as an antitrust violation.

Mr. Weinstein: Well, I do not think Singer had the bargaining advantage——

The Court: I say had they agreed to do that.

Mr. Weinstein: Oh, that is right, your Honor.

The Court: And the mere fact that they did not agree to stay out of foreign markets would be an indication of their good purpose to observe the antitrust laws.

Mr. Weinstein: No, I don't agree with that, your Honor. It merely——

The Court: You think that no good must be ascribed to this?

[fols. 408-410] Mr. Weinstein: No, I think one does not have to violate the antitrust laws in every possible respect to violate it in one respect. We do not allege that there is any world division of markets in this case.

The Court: All this talk about conspiracy, I wanted to see whether it was all ether or atmosphere or whether it was something substantial.

Suppose we take a few minutes recess.

(A short recess.)

Mr. Weinstein: Your Honor, we were just proceeding into Singer's desire to obtain the Messerschmidt foreign applications, and I indicated that Government's Exhibits 97, 98, 99 and 100 were relevant to this.

In order to speed things along, I will go right to——

The Court: Well, you can speed things along but don't leave anything out that you consider essential.

* * * * * * *

[fol. 411] The next two letters, your Honor, are both dated October 17, 1957. The first one is Government's Exhibit 103. It is a letter from Mr. Waterman to Mr. Lightner dated October 17, 1957, and its subject concerns the Messerschmitt applications. It states:

"Dear Mr. Lightner:

"I cabled you concerning negotiations with Messerschmitt. We arrived at an arrangement whereby Mes-
[fol. 412] serschmitt will assign to Singer all of its foreign patents."

He continues on a little further down in the paragraph:

"These patents are the first that Singer will own which include among the claims certain reverse feeding means in connection with some other mechanisms of an automatic cam-block machine. They are not fundamental except to the particular mechanism of the Messerschmitt style of machine. They are a worthwhile addition to Singer's collection of automatic zigzag machine patents. It remains for Mr. Wiegand's office and the Messerschmitt attorney to finalize the exact terms of the agreement and to take care of the

signing by both parties. These papers will come forward to me in New York in a short time. The bundle of patents will cost us $25,000 and compensates Messerschmitt for its patent costs and a payment to the inventor (necessary under German law) and perhaps between $5,000 to $10,000 extra. Mr. Stanford thinks this cost is really low for this number of patents. It was necessary to agree that in case of a sale of the [fol. 413] sewing machine business by Messerschmitt the purchaser of the company would be licensed just as Messerschmitt under these assigned patents, to build and sell the present Messerschmitt machine. Such sublicensing is only permitted to the successor building sewing machines of the Messerschmitt company."

At the bottom of the letter, your Honor, it goes on to state:

"Just to show you what we went through in enduring the negotiations I am inclosing two typewritten sheets. All this about sub-licensing others promiscuously and division of territories where machines would be made and sold was pushed aside very quickly."

The closing paragraph states:

"One other point to be in a memorandum in letter form accompanying the agreement states that before Messerschmitt sells its business to anybody it will advise Singer and give it first option to purchase. This means little to us other than that we will have knowledge of what is going on before it happens. I personally believe that Messerschmitt will shortly set [fol. 414] up an independent sewing machine company, apart from its other interests, and then the new company will dispose of this sewing machine business. It is well that we own these patents before all of this happens."

Your Honor, Government's Exhibit 49, which Mr. Elkins has already covered, is again just mentioned here because it was a letter written on the same date by the same Mr. Waterman to the same Mr. Lightner. On that same day he wrote:

"Dear Mr. Lightner:

"Yesterday Mr. Stanford and I met with the Gegauf people and discussed from midmorning until early evening the matter of the assignment of the Gegauf basic U. S. patent on its automatic cam-block zigzag machine. Such assignment like others that we have concluded will give Singer complete ownership of the patent (or as it is the case in this instance, patent application) and in return will license Gegauf to build and to sell his machines just as he is now doing."

These letters are all placed together, your Honor, just to show that at the very same time that Singer was giving [fol. 415] consideration to obtaining the Gegauf patents, although it already held a license under it, it was at that same time giving consideration to acquiring all of Messerschmitt's foreign applications for the purposes of restricting the Japanese and——

The Court: That is all Messerschmitt's foreign applications concerning a definite patent—not all of it, but all concerning one definite patent which related to the pending United States application.

Mr. Weinstein: It was a patent that had two parts to it, your Honor. It was on a machine-carried multi-cam machine.

The Court: Yes, but when you say "all" of their patents you do not mean it that way—all the patents that Messerschmitt owned?

Mr. Weinstein: Corresponding to their American application, your Honor.

The Court: All right. "All" is a small word with a big meaning.

Mr. Weinstein: Government's Exhibit 104, your Honor, is a letter by Mr. Adamson of Singer in Germany to Mr. Stanford of Singer's Patent Department, and it is dated January 24, 1958.

He states:

[fol. 416] "Dear Mr. Stanford"—and the full heading is. "Re: Agreement Between Messerschmitt A.G. and The Singer Manufacturing Company (Foreign Patents)."

The second paragraph states, concerning their meeting with the Messerschmitt people:

"We then tried to make an appointment with Mr. Busselmeier in order to give Mr. Waterman, whom we expected here this week, a chance to speak to him. After some difficulties we could get hold of Mr. Busselmeier who was away traveling at Cologne and Wiesbaden and invited him for a conference here at Frankfort.

"This conference took place late in the evening on Tuesday, January 21st. There were present Mr. Busselmeier, Mr. M. L. Waterman, Mr. Adamson and Mr. Kruger."

The last paragraph on this page, your Honor, states:

"Mr. Busselmeier explained that the managing director Dr. Rothe of the Messerschmitt A. G. had not made up his mind yet to sign the agreement. There were two items which evidently had prevented this. [fol. 417] "The one evidently is that Dr. Rothe appears to keep turning over in his mind whether Messerschmitt had better not sell the sewing machine business, the other is that the supplementary understanding to the signing of the agreement for the Foreign Patent by Messerschmitt, confirmed to Mr. Busselmeier by Mr. Niemann in his covering letter of November 1st, 1957, with which he handed to Mr. Busselmeier the revised draft for the proposed Singer-Messerschmitt agreement in triplicate, should be included with the Singer-Messerschmitt agreement proper.

"This supplementary understanding covers the grant of the same license as given to Messerschmitt under the agreement also to a possible purchaser of its sewing machine business, and the option of 30 days to Singer for the acquisition of this business in case of an intended sale of it by Messerschmitt."

On page 2, your Honor, the second paragraph from the bottom states:

"Out of these considerations Dr. Rothe evidently believes that the sale of the sewing machine business

will be more facilitated and give a better return if a [fol. 418] bunch of valuable patents can be sold along with it. Mr. Busselmeier mentioned that there may already exist prospective buyers and that these may also have their domicile abroad since Dr. Rothe may have come into contact with them during his frequent journeys abroad."

Then what I consider to be a very important paragraph on page 3, your Honor, he goes on to state:

"Mr. Waterman told Mr. Busselmeier"—Mr. Busselmeier represents Messerschmidt, your Honor—"that Singer is not interested in the acquisition of the Messerschmitt sewing machine business at present and that Singer is neither interested in the Messerschmitt foreign patents to the extent that they would buy the whole sewing machine business in order to become owners of these patents. In fact, Singer does not need the patents for any of their new machines in construction or being designed. They were just wishing to obtain the patents for supplementing their own similar patents as Singer is often acquiring patents of other inventors."

[fols. 419-432] In response to this, your Honor, Mr. Stanford cabled Mr. Adamson on January 28, 1958—in response to these negotiations with Messerschmitt—and he stated:

"We agree"—this is Government's Exhibit 105——
"We agree to purchase Patents without business under modified Busselmeier plan. If Patent owner agrees send us copy of agreement for approval."

. . . . . .

[fols. 433-435a] New York, May 9, 1961, 10:30 A.M.

. . . . . .

[fol. 436] Mr. Weinstein: Your Honor, the next two sets of documents, and there are only a few, are used by the government to indicate principally the same thing, namely,

that Singer was concerned with Japanese competition and that they were not unwilling to consider Europeans as [fols. 437-442] licensees.

Mr. Pettit: May we know what document that is?

Mr. Weinstein: Yes. We are concerning ourselves with the document relating to Husqvarna, Exhibits 111, 112, 113, 114, 115, 116, 117, 118, 119, and 120.

. . . . . .

[fols. 443-446] Like Husqvarna, your Honor, Singer showed a willingness to license possibly another European manufacturer—and this is Phoenix.

. . . . . .

[fol. 447] The Court: Isn't the net result of these exhibits this: No. 1, that Singer named both of these companies, the Swedish company and the Germany company, as defendants in the complaint before the Tariff Commission.

No. 2, that the Swedish company and the German company asked Singer to withdraw that complaint and grant them a license.

No. 3, that Singer refused to withdraw the complaint or to grant them a license.

Is there anything unusual to giving an equivocal answer to a party whom you have named in a complaint, with the hope that he might not defend, and that your course may be much easier than to definitely turn him down with a definite answer and lead to an antagonistic defendant?

[fol. 448] Isn't that part of the ordinary conduct of litigation?

Mr. Weinstein: I think Singers reasons, your Honor, are illustrated by Government's Exhibit 109, which we have already read, and in which Mr. Williams, in writing to Mr. Kircher, states:

> "You will recall that at the December 22 conference there was no unanimity of opinion as to how this Statement should be worded."

They were talking about the Statement to the Tariff Commission.

"However, Mr. Colburn"—and we add that Mr. Colburn conducted part of the litigation for Singer in the Tariff Commission——

> "is quite convinced that this Statement should not include any comparisons between imported Japanese and European sewing machines with regard to the damaging effects of such imports to United States manufacturers of sewing machines. In view of Mr. Colburn's rather strong feelings in the matter we recommend approval of the enclosed Statement B."

And the statement was written in its own best interests, in realizing that they would have gotten nowhere in the Tariff Commission had they wanted the Tariff Commission [fol. 449] merely to exclude Japanese machines, as they admit in one of the documents that we read—that the Tariff Commission does not act as a licensing agency to determine who shall come in or who shall stay out, your Honor.

The Court: But the net result of Singer's actions is that they kept these European manufacturers named in the complaint as defendants, that they would not grant them a license and continue to press their complaint against the European importers as well as the Japanese importers.

Mr. Weinstein: In the first place, your Honor, I think, as we have stated before, there are no defendants in the Tariff Commission.

The Court: Well, they call them "defendants"— and you have called them "defendants" and justified that description—you and Mr. Elkins, so that I fall in the same pattern.

Call them anything you want. Call them "respondents", "defendants".

Call them by other sweet names.

Mr. Weinstein: Singer did not introduce Husqvarna's machine in the Tariff Commission, your Honor, as was mentioned in this letter—if Husqvarna did not oppose [fol. 449a] Singer, Singer would not oppose Husqvarna.

I think if Singer had been successful, they were leaving themselves an opportunity of licensing European manufacturers.

The Tariff Commission was specifically aimed at Japanese manufacturers, and Singer well knew that they would not

stand a chance had they gone in and asked them to please exclude only Japanese machines.

[fols. 450-466] The Court: You see what you are doing here, you are picking out circumstances, and from those circumstances you want me to draw an inference of guilt when those circumstances are equally susceptible to an inference of innocence.

• • • • • • •

[fol. 467] Mr. Elkins: If your Honor please, Government's Exhibit 141 through 144, as far as plaintiff is concerned, can be removed from the record. We will not attach any significance to them. They relate to a new machine that came along pretty late in the game, I think in 1959, the [fols. 469-468] Vigorelli machine, and the purpose of having them in there in the first place was merely to show a Singer interest in any patent that——

Mr. Pettit: If, as I understand, this is a motion to delete, I want to oppose it.

The Court: No. He says he doesn't move to delete them but that, as far as the government is concerned, they do not add anything to the government's case. I suppose you contend that they add substantially to the defendant's case.

Mr. Pettit: They have an effect.

The Court: Yes. All right. But he, perhaps implicitly, recognizes that.

Mr. Elkins: I will be very happy to comment upon them, your Honor, as we originally intended to do.

The Court: You don't have to if you don't want to.

Mr. Elkins: I suppose we might as well, your Honor.

The Court: Apparently it might be just as well because of the importance that Mr. Pettit places upon them.

• • • • • • •

[fol. 470] Government's Exhibit 142 is a letter from Mr. Waterman to Mr. Lightner which answers the previous letter, and at the bottom of the page Mr. Waterman states:

> "However, I have telephoned to Baumann to sound [fol. 471] out Vigorelli to learn if the new machine may be seen by me next week, and I shall then also learn if

there are any patents of which we have no knowledge and also if there seems to be any way we can study the equipment. This latter I will have to inquire about carefully and only if the conversation can be carried on in the proper spirit."

At the bottom of the page Mr. Waterman continues:

"You may be assured I shall attempt to get the opportunity to evaluate this latest Vigorelli effort and any other patents or applications of which we can learn."

The Court: Just before you leave that exhibit, I note that you omitted one paragraph there. You omitted the paragraph in which this man—what is his position in Singer?

Mr. Elkins: Vice President Waterman.

The Court: A pretty responsible man.

Mr. Elkins: Yes, I would say so.

The Court: As far as the management of the concern is involved. He writes here, not conscious of the impending suit which is now before us, contemporaneous writing which [fol. 472] I think reflects his true mind and true view of the situation, and he says:

"I realize full well that what you say about our being behind in the field of zigzag sewing machines is so."

Doesn't that indicate to you that Singer realized that for their very continued existence they had to acquire this Gegauf patent and that that was the reason it was acquired and not to assert it against any Japanese importers exclusively?

Mr. Elkins: Definitely not.

The Court: But for their very existence?

Mr. Elkins: Definitely not, your Honor. And, if I may address myself to that——

The Court: For instance, what significance do you also place upon this last sentence of this same paragraph that you omitted to read, where he says, "I feel pretty sure that it will be favorable, but we have been skating on some pretty thin ice." Doesn't that mean that Singer's technical posi-

tion has been extremely thin and untenable and would be so far more without the Gegauf patents and this zigzag sewing machine? Isn't that what this man had in mind?

Mr. Elkins: Definitely not, your Honor, and, if I may [fol. 473] explain, and I think we covered this earlier, we concede that when this new type machine was introduced, which we have called the machine carried multi-cam machine, Singer was, in relation to their technology, in relation to its patent application position, exactly what Mr. Waterman states here, that is, behind in the field of zigzag sewing and behind in relation to these built-in cam machines.

We have conceded that, that being the case, Singer had every right to try to get a license from competing patent applicants in order to continue to manufacture and to sell its product which at that time or during 1955, prior to 1956, it was developing.

We believe here that Mr. Waterman—in fact, we know—was talking about that situation, was talking about Singer being behind and was talking about patent licenses and not the acquisition of patents, your Honor.

The Court: Why do you say that when you know that the mere possession or right to have a patent license or to manufacture under a patent does not give you status to sue for infringement? And if you have a license under a foreign-owned patent, you are hopeless and helpless, if you try to stop infringements, in many situations.

[fol. 474] Mr. Elkins: It is absolutely true, your Honor, that Singer, as a non-exclusive licensee under a patent, would have no right to bring suit upon it.

The Court: They would be exercising and applying an invention which, if the foreign owner of the patent did not actively protect it by infringement suits, for all practical purposes would be in the public domain and everybody would be using it.

Mr. Elkins: I can only add again, your Honor, that Singer's legal rights were represented by the fact that it had a non-exclusive license from Gegauf and that——

The Court: It was a non-exclusive license with certain express limitations and reservations to Gegauf. There was a little bit more than the ordinary non-exclusive license. But even with that, they were helpless unless Gegauf wanted

to begin a suit for infringement, and apparently Gegauf was holding on to his money over in Switzerland and did not want to spend anything to involve himself in litigation which would cost him anything.

Mr. Elkins: There is nothing in the Singer-Gegauf agreement of April 14, 1956 which is applicable here in this discussion except a promise by Gegauf that it would not [fols. 475-477] sue Singer on any patents that resulted from its, Gegauf's, applications. Singer received nothing else. As far as its legal rights were concerned under that agreement Gegauf, as far as the face of the agreement is concerned, could have licensed everybody and anybody, could have sued on the patent or could not have sued on the patent. Singer obtained no legal rights other than what we say, a promise from Gegauf not to sue it.

The Court: But Gegauf did not obligate itself to file any infringement suits and it did not authorize Singer to file any infringement suits in its name, Gegauf's name.

Mr. Elkins: That's right, your Honor.

The Court: So Singer had no way to protect its product from products of unlicensed producers or manufacturers.

Mr. Elkins: That agreement of April 14, 1956 as to its provisions that relate to this discussion——

The Court: I regard this paragraph that you omitted to read as being quite important.

Suppose we take a recess now for about five minutes.

(A short recess.)

* * * * * * *

[fol. 478] Government's Exhibit 144 is of the very same nature. This is a memorandum from Mr. Lightner to Mr. Waterman, and in the last paragraph, still talking about the same subject, he states:

> "The thing that I find to be missing is an analysis of the patent situation: that is, what is there in the patent area which we can acquire? To state it differ- [fols. 479-499] ently, what can we make a machine do if we acquire the patents that would be secured in a new deal with Vigorelli and that we cannot do under our present patent situation? It seems to me that this is the crux of the problem, because I think we want

to explore the possibility of our being in a position to build the maximum sales appeal into a new Singer machine."

Inasmuch as we charge here an attempt to monopolize, your Honor, and that that attempt was by virtue of patent acquisition, that is the only reason why we cite the documents we have just referred to. Inasmuch as Singer is the only manufacturer in the United States, virtually the only one and certainly the only one in the zigzag field, if, of course, they buy up every patent that comes along, it would ultimately be impossible for anybody else to get into the industry. Beyond that we attach no great significance to them.

• • • • • • •

[fol. 500] ARGUMENT ON BEHALF OF GOVERNMENT BY MR. ELKINS

• • • • • • •

[fols. 501-514] The patent applications which we have been discussing, ultimately issued from the United States Patent Office—the Harris Reissue in November, 1957, Perla in November, 1957—excuse me, both of them in October, 1957; the Johnson patent in December, 1958, Gegauf 1 in April, 1958, and Gegauf 2 in March, 1959.

We stated before the Perla and Johnson patents resulted from Singer's own research.

Of those that we have mentioned, Gegauf 1 was acquired.

Gegauf 2 was acquired.

The Harris Reissue actually was acquired but away back in the early days when Singer was on thin ice and was looking for licenses from competitors, so that the acquisition of the Harris Reissue did not contribute at all to the offenses which we allege here. They bought it for defensive purposes, not offensive purposes.

• • • • • • •

[fol. 515] The Court: Does the government complain because Singer acquired too many basic patents?

[fol. 516] Mr. Elkins: The government complains, your

Honor, that the defendant Singer entered into a conspiracy, the terms of which would group all of these various patents in Singer for the purpose of using them to limit or exclude competition from the Japanese-made machines.

We also alleged an attempt to monopolize by virtue of the acquisition and use of the patents in question, so that what we were trying to do there, your Honor, relying upon the material which is set forth in the statement of facts, is to show that the effect of it, through the successful enforcemen of the patents involved, would indeed have given Singer a monopolistic share of the market here in the United States.

The Court: Will you reporter please read my question to Mr. Elkins—and if you can make a categorical response I will be grateful.

(Record read)

Mr. Elkins: I suppose that it could be stated that we do, your Honor. However, the question is relating solely to the acquisition of patents by Singer, apart from any conspiracy, apart from any attempt on the part of Singer to monopolize.

Answering the question directly, we would say yes, your [fol. 517] Honor, it acquired too many patents and as a result of the acquisition of its patents, it did indeed attempt to monopolize, among other things—it attempted to monopolize manufacture, sale and distribution of these machines in the United States.

The Court: But you have presented no evidence of it having asserted or attempting to assert any of these patents as against any other Japanese importations.

Mr. Elkins: If I may address myself to that, your Honor, we have been dealing with the conspiracy, and according to the evidence as we evaluate it, the conspiracy was to group them in Singer for the purpose of enabling Singer to exclude or limit competition from the Japanese products.

It is also true that when Singer acquires the patents, it has the power to exclude anybody and everybody other than, as it appears here, Vigorelli and Gegauf.

It has the power to exclude so that the material that we have just presented to the Court related to two parts: the effect of using those patents as against Japanese imports,

and also the effects of using the full power which Singer obtained by acquiring those patents.

[fol. 517a] The Court: But you have presented no evidence of any attempt by Singer to assert any of these patents against anybody except Japanese importations; isn't that the fact?

[fol. 518] Mr. Elkins: As I recall the evidence, your Honor, it all relates to exclusion of the Japanese. I have in mind the patent suits. They were all directed against companies that were dealing in the Japanese-made products. The Tariff Commission, on its face, of course, relates to all imports.

The Court: If you were cross-examining me and propounded that question to me as a witness, would you expect a yes or no answer, as an experienced examiner?

Mr. Elkins: There is no evidence that I can recall reflecting that Singer asserted any one of these patents as against a European manufacturere except the United States Tariff Commission proceeding which relates to all imports.

The Court: Is it your contention that Singer acquired the Gegauf patents with the intention and with the purpose of asserting them against importations other than those of Janapese origin?

Mr. Elkins: There is, as I recall, very little evidence that relates—and I am meeting your question, your Honor—to Singer using the patents as against Europeans.

The Court: The fact that you say that you are meeting [fol. 519] my question indicates to me psychologically that you have a doubt in your own mind as to whether or not you are.

All right.

Mr. Elkins: There is general material, your Honor, if I can put my finger on it in just a moment, relating to what I believe is in your Honor's mind and relating to the idea of Singer asserting these patents against Europeans if it so sees fit.

When Mr. Stanford was going to Europe to confer with Mr. Gegauf, a policy statement was drawn up by the president of Singer at that time for the guidance of Mr. Stanford. That document indicated that the concern or the thinking of Gegauf was that these patents would be as-

signed to Singer for the purpose of enabling Singer to exclude machines from Japan. The document also went on to say that an effort should be made to get a transfer of the applications from Gegauf which would enable Singer to use them against any and all Europeans. Mr. Lightner, in this memorandum which is Government's Exhibit 57, stated:

> "If we do have to pay such a price, it is very desirable to try to get some quid pro quo for the excessive price, and this may well lie in this matter of licenses [fol. 520] to the unnamed European manufacturers."

There Mr. Lightner is referring to the fact that Mr. Gegauf, as shown by the documents, is precisely and particularly interested in the exclusion of Japanese competition, not so interested as to Europeans. Here Singer is contemplating the idea of receiving something from Gegauf which will omit licenses to the European manufacturers.

The Court: That doesn't show or indicate an agreement or purpose on the part of these conspirators, does it?

Mr. Elkins: It shows the purpose on the part of these conspirators as to the Japanese products, your Honor.

The Court: Does the government contend that the Gegauf patents were acquired by Singer to be asserted against European as well as Japanese competitors and with that purpose in mind?

Mr. Elkins: I believe, your Honor, that the defendant Singer, in buying these patents, would assert them against Europeans or get royalties from them. I cannot go into it any deeper, any more specifically than that. All that we know about the situation is what is reflected by the evi- [fols. 521-523] dentiary material. The same document from which I am quoting said—Mr. Lightner said:

> "If Bernina is to continue to have the right to send machines into the United States, and if they consider that right important, they may very well see the wisdom of enabling us to stop other imports from Europe as well as those from Japan."

This indicates that Singer certainly, if it got an assignment from Gegauf that was unfettered, would see the wisdom of being enabled to stop other imports from Europe as well as those from Japan, and the only limitation that was put in the assignment by Gegauf, and this is what they are talking about there, was the limitation on the ability of Singer to use the assigned patents against Vigorelli and Pfaff. And, as Mr. Farrell pointed out this morning, the agreement was later amended by the deletion of the name of Pfaff.

If your Honor please, we will be finished as soon as Mr. Weinstein addresses the court briefly on two incidental matters.

* * * * * * *

[fol. 524] The Court: Come back to my question. Now just taking the facts that I have given you, without anything else——

Mr. Weinstein: Could I have that question read again?

The Court: —do you contend that it is unlawful for an American manufacturer to acquire title to an American-issued patent which is owned by a foreign competitor so that it can produce and manufacture under that patent here in this country?

Mr. Weinstein: We are restricting ourselves to attempt to monopolize with respect to this question?

The Court: That's it. Forget all this talk about conspiracy.

[fol. 525] Mr. Weinstein: I say if the sole American manufacturer acquires an American patent for a purpose of further entrenching itself and making it less likely that it would have competition, that is an unlawful attempt to monopolize under Section 2, your Honor.

Your Honor, I would first like to direct myself, and I will be very brief, to the agreement of April 14, 1956, the so-called cross-licensing agreement between Singer and Bernina, which is Gegauf. That is Government's Exhibit 26.

We offer this agreement to show that one of the means used by the conspirators to get broad claims is unlawful on its face. This cross-licensing agreement, your Honor, involved some, I think, fifteen or so patents and patent

applications, but we will restrict ourselves simply to the Gegauf-United States application which later became Gegauf 1 and the Harris patent.

At the date this agreement had been entered into, the Patent Office had suggested a claim for the purpose of interference to Gegauf. The Patent Office, subsequent to this agreement, determined that that claim could not be allowable and that it was invalid because of prior art and then suggested another claim which later became the subject of the interference. But at a time when that claim had been [fol. 526] suggested by the Patent Office, the claim which the Patent Office later held to be non-patentable, Singer and Gegauf entered into an agreement which they termed a cross-licensing agreement, and the opening preamble paragraph on page 2 states:

". . . that Singer and Gegauf realized that Interference proceedings are about to be opened in the U.S.A. between the said Harris Reissue application and one or more patent applications of Gegauf corresponding wholly or partly to its above-mentioned patents and patent applications. In view of the foregoing, Singer and Gegauf have entered into the following agreement:

"1. Singer and Gegauf each undertake not to do anything either directly or indirectly and in any country, the result of which might restrict the scope of the claims of the other party relating to the subject matter of the above-mentioned patents and patent applications.

"Singer and Gegauf each undertakes, in accordance with the laws and regulations of the Patent Office concerned, to facilitate the allowance in any country of claims as broad as possible as regards the subject [fol. 526a] matter of the patents and patent applications referred to above."

[fol. 527] This agreement, I again stress, was made at a time when a claim was pending for interference which the Patent Office later said would be unpatentable and removed from the issue of interference, as the Patent Office did, on its own motion.

Your Honor, we claim that these provisions are not the usual licensing provisions.

The next paragraphs of this agreement go to the licensing provisions. By the very placing of these paragraphs first, it is quite clear what the parties intended, that if placed in an interference in order to make sure valid patents are granted, the parties will determine the issue of priority as the law requires it, and no party would do anything which would possibly narrow the scope of the interference, and as a matter of fact they will facilitate the granting of claims as broad as possible.

Why do we say this is illegal? We say this is illegal, your Honor, because this is no ordinary agreement. This is not an agreement involving two parties. This is an agreement which involve the public.

• • • • • • •

[fol. 528] We say, your Honor, that any party in an interference is perfectly free to follow his own best interests as to how he best feels that interference should be litigated, but we say it is patently illegal to enter into an agreement and say "I will give up my rights to contest in an inter-party proceeding the very nature of the patentable issue.

• • • • • • •

[fol. 529] Mr. Weinstein:

We raised this point, your Honor, because the patent system is just a system—Congress has built into it certain checks and balances. It is for the most part an ex-parte system, but Congress and the Commissioner of Patents have determined that when an interference is declared, the parties shall act in an inter-party manner, and the rules of the Patent Office—and I especially refer, your Honor, to Rule 232 of the Patent Office which says that a party is free to challenge the count in an interference as being non-patentable. It is a very valuable right, your Honor. A study made by the Senate has indicated that in 100 applications which were checked into, in 31 per cent of the cases the party alleged that the count was unpatentable, and that in 42 per cent of those cases where the issue was raised the count was held to be unpatentable.

[fols. 530-535] We claim, your Honor, that by entering into this agreement to gain broad patent rights, and to assert these patent rights against Japanese competition, the parties have entered into an agreement which is unlawful on its face.

Your Honor, I would like to raise one other point with respect to this. I would like to show you how far the defendants have gone in this case.

In the first place, they agree that they are going to get broad claims. They agree that they are going to get claims as broad as possible, and they enter into an agreement which ties their hands, which seals their lips so far as limiting their claims are concerned, and then when they turn around to enforce those claims, they enforce them in the United States Tariff Commission where the question of validity cannot be raised.

. . . . . .

[fols. 536-538] OFFERS IN EVIDENCE OF DEFENDANT'S EXHIBITS

Mr. Pettit:

. . . . . .

[fol. 539] Your Honor, I would like to first put in evidence the Singer 206 machine, an innocent machine that may be [fol. 540] said to be the cause of all this turmoil fundamentally.

The Court: The clerk will mark it in evidence as Exhibit 105.

(Received in evidence as Defendant's Exhibit 105.)

Mr. Pettit: You will find this machine referred to in paragraph 14 of the statement of facts. It was invented by Singer. It is the first machine, family machine, that incorporated the zigzag mechanism. It has a fixed lateral throw of a needle at all times and is a manually-operated machine.

In order to show the zigzag mechanism, I would like to introduce two further exhibits, one a drawing which has in color——

The Court: We will call that Defendant's Exhibit 105A so as to relate it to 105.

(Received in evidence as Defendant's Exhibit 105A.)

Mr. Pettit: And then the mechanism that is taken from the 206 machine and is mounted on a board here and shows the details of the 206 zigzag mechanism.

The Court: That will be 105B.

[fol. 541] (Received in evidence as Defendant's Exhibit 105B.)

The Court: Let me see that mechanism. I think I have seen it before, but I want to make sure.

This Exhibit 105 is a manually-operated zigzag machine.

Mr. Pettit: Yes. I would like to call your attention to the fact that that has a fixed eccentric or a cam with a heart shape, the result of which is that it throws a constant movement to the needle. It has a mechanism by which it can be manually controlled by which the bite, or, in other words, the reach of it can be varied, and the cam is this one on the end that the arm is fixed to, and that is the one that makes the motion of the needle. It gets the zigzag motion by moving the needle laterally.

I would like next to put in as an exhibit the Singer 401 machine. That is the big machine sitting there on the table.

The Court: As Exhibit 106.

(Received in evidence as Defendant's Exhibit 106.)

[fol. 542] Mr. Pettit: And then I would like to put in evidence a drawing of this machine, the interior of the machine, with the zigzag mechanism filled in in color.

The Court: As Exhibit 106A.

(Received in evidence as Defendant's Exhibit 106A.)

Mr. Pettit: And then the 401 mechanism mounted on the board.

(Received in evidence as Defendant's Exhibit 106B.)

Mr. Pettit: Your Honor, I would like to spend a little time with that mechanism.

The Court: All right. Do it down there. Go ahead. I thought I would enjoy myself privately.

Mr. Pettit: I would like to do it where you can see it, certainly, and I would rather do it up here.

The Court: Distance lends enchantment sometimes. You had better come up here, too, Mr. Elkins. Put it over here on that table.

Mr. Pettit: This is a mechanism that involves the stacked cams and the follower. This mechanism is the Johnson invention, the old mechanism. This has the following features: first, the basic one of a single follower. You will [fol. 543] see that there are two columnar metal pieces here, one of which has a follower on it that can be immobilized by moving it to the bottom and letting it fix against these cams which are stationary and have no configurations on them but have different depths, three different cams at three different depths.

When that follower is placed on one of those cams, it is immobilized, and what you have is a stack of cams with a single follower operating from this. This is one of the reasons that the replaceable cam machine has some advantage.

By moving this handle the follower can select any one of the cams, and, of course, each cam has a different configuration. Then there is a connecting means by which the motion can be transferred from the cam through this, over to the needle. That is the fundamental of the Gegauf machine and the Gegauf No. 1 patent. It is the fundamental of the Vigorelli machine and the fundamental of the Singer machine.

The Court: What is?

Mr. Pettit: This mechanism, a stack of cams, a single follower, retractable means of withdrawing the follower, and selecting any one of the cams desired. That is Gegauf No. 1, Vigorelli and Johnson.

[fol. 544] The Court: When you say it is Gegauf No. 1, Johnson and Vigorelli, you mean that that identical claim or claims are found in each one of these three patents?

Mr. Pettit: Each one of these machines. Only one patent could issue on it. Gegauf's was first.

The Court: Are they found in each one of these patent applications? That is what I would like to know. Are they found in each one of the patent applications as being claims asserted?

Mr. Pettit: The claim was not inserted in the Johnson application because Johnson found the Vigorelli machine on the market and because of that knew that he could not place his invention date ahead of the Vigorelli machine. But all of his drawings, the patent that he did get, discloses this mechanism in every detail and, except for the Vigorelli machine, would have claimed this mechanism of the single follower as well as the double follower. But he could not truthfully make the allegation, and he therefore did not put it in his patent. But it is perfectly plain that Vigorelli must have had his conception date before Singer's by quite some margin, which he did.

[fol. 545] The Court: Where does Gegauf No. 1 stand on this?

Mr. Pettit: Gegauf No. 1? May I just introduce in evidence as the next exhibit the mechanism from the Gegauf machine which falls within the Gegauf 1 patent and which is the mechanism that Gegauf claimed in his application.

The Court: As Exhibit 107.

(Received in evidence as Defendant's Exhibit 107.)

Mr. Pettit: I would now also like to introduce next the Vigorelli mechanism which corresponds to these other two.

The Court: Mark that as Exhibit 108.

(Received in evidence as Defendant's Exhibit 108.)

The Court: Let me see if I understand you. 106B embodies the Johnson idea, does it?

Mr. Pettit: Yes, sir.

The Court: And this is taken from Singer 401?

Mr. Pettit: That is correct.

The Court: But it also embodies Gegauf 1, which is the 107, and it embodies Vigorelli, which is 108.

Mr. Pettit: That is correct, sir. Every one of these ideas [fol. 546] are the same.

The Court: When you say every one of these ideas are the same, you mean by that that each one of these devices, 106B, 107 and 108, represents a physical embodiment of the same invention?

Mr. Pettit: This is correct, sir.

The Court: What is that same invention?

Mr. Pettit: A stack of cams having a follower which is

retractable and which can be moved lengthwise to the axis of the cam in order to select any desired cam.

The Court: Then where are these devices or these pieces of mechanism on Exhibit 107? That is the Gegauf.

Mr. Pettit: Here is the stack of cams, here is the selecting means——

The Court: They are set up vertical rather than horizontal.

Mr. Pettit: Yes, vertical instead of horizontal. So is the Vigorelli set up vertically.

The Court: The Vigorelli is done the same way.

Mr. Pettit: Yes, sir, and in each instance there will be a stack of cams, a single follower, a means for the withdrawing of the follower and moving it lengthwise to the [fol. 547] axis of the cam to select the desired cam.

And, your Honor, I repeat the details of that because each and every one of them is an essential element of the invention and of the claim, and unless each and every one of those is present, then the claim is not valid. These mechanisms are just practically identical.

The Court: It is your contention then, or the defendant's contention, that the mechanism in these three machines are in conflict and read on the same invention.

Mr. Pettit: Oh, yes, yes, and that is the reason——

The Court: Does the government dispute that?

Mr. Elkins: That is true as far as the single stack of cams is concerned, the single follower and the means of engaging one cam with that follower. There is something in the 401 machine that is not covered by Gegauf, namely, the other follower.

Mr. Pettit: I will come to that in a minute because I have definitely immobilized that for the express purpose of leaving this a single cam.

Mr. Elkins: Otherwise there is no dispute.

[fol. 548] The Court: So, then, in a contest involving patent rights only one of these three machines could be sustained as being under a valid patent.

Mr. Pettit: That is correct.

The Court: And you say they are in conflict, the Vigorelli, the Gegauf and the Johnson.

Mr. Pettit: And the Johnson, and the claim in the Harris patent.

Now the Johnson. When you say Johnson, there are certain additional features that I will get to in a minute. At the moment I am limiting myself to the stack of cams and the single follower which is the basic idea in all three of them.

And so that you may have in the back of your mind the sequence of events, the Vigorelli machine and concept was ahead of Johnson. Singer acquired the Harris patent which was ahead of both. It then ran into the Gegauf application which was ahead of all of them. The Gegauf 1 ultimately ended up nine days ahead of Harris.

The Court: Is Harris the man from Canada?

Mr. Pettit: Harris is the man from Canada.

The Court: All right. I just want to orient it with reference to these exhibits.

[fol. 549] Mr. Pettit: And I may add that the claim finally allowed in Gegauf No. 1 patent was taken from the Harris Reissue application. The Harris original patent disclosed this mechanism but did not claim it. The Harris patent was bought for the express purpose of getting a reissue, inserting the claims, and using it to do battle first with Vigorelli and then with anybody else. And, like many weapons of war, it served its purpose but was used up in doing it and ended up with everything that it had in it except three minor items stripped out and put into the Gegauf No. 1 when the Examiner put those in Interference.

The rest of the Johnson. The Johnson patent obviously could not include the single cam in a stack and follower mechanism but, in inventing that, he invented items that went with it. One of them is this wonderful mechanism that I cannot operate. I have never been able to operate it. One of the inventions is the dial which both retracts and lets you turn it to select the particular cam desired. That is just a natural part of putting this together. It was all designed together, all invented together, as is this little integrating device here, this integrating plate. It is used in order to let two followers be used, and he did invent [fol. 550] the second follower. That is the primary additional thing that he did invent, the second follower.

In order to have the second follower work effectively, he needed an integrating plate, and he put this integrating plate in here by virtue of which you can use two followers

at the same time. That, too, was part of the invention of this entire mechanism.

So you had here really four features: First was the stack of cams and a single follower; next was the second follower which could be used or could be disengaged; third was this handle and the means of moving the follower; and fourth was this integrating mechanism that let the two be worked together.

[fol. 551] The Court: And neither of these last three are found in Gegauf?

Mr. Pettit: They are not found in Gegauf 1. They are all found in the Johnson patent.

The Court: But not found in Gegauf No. 1.

Mr. Pettit: They are not found in Gegauf 1, they are not found in Gegauf 2, and they are not found in Vigorelli. These were invented by Johnson as he invented the whole mechanism, and these are what was left after the heart of it was taken out. They were just additional items to go along with, improvements or additions to the main idea of the multiple cam and, as you can see, they all worked together in conjunction with it. They put in a second follower, a means of selecting, a means of taking, the handle.

And when you talk about the Johnson patent and its coverage, that is what you are talking about, the three items that I have mentioned here, and you exclude the stack of cams and the single follower.

Before I leave that I would like to point out the great difference between this 401 machine and the 206 machine. You will remember that the statement of facts states that there was four years intervening from the building of this machine. This machine was an entirely new machine [fol. 552] for anybody, Singer or anyone else, and was four years in the final production of it. There was not a single feature of it that could be produced from the old tools. The casing, everything about it, was new, and you will see that it is a great deal more complicated sewing machine than this, Exhibit 105A. It had many features of it other than the multi-cam features that are new to sewing machines. Some of them are mentioned in a letter that I will produce in a moment.

In the statement of facts you will remember that Singer produced the 206 machine, the manual machine, and sold

it in Europe from 1934 up to the war, but had never brought it into the United States or sold it here. After the war it continued manufacturing the machine but in Clydebank instead of in Germany, its plant there having been seized by the Russians, and continued to sell it in Europe.

In 1948 a similar machine to the 206 was brought in by Necchi, and by 1951 it had demonstrated its marketability and the demand for a zigzag machine, and the result was that Singer then started importing and selling the 206 machines into the United States but it also realized that it had to have something more. Once it got to selling a [fol. 553] zigzag machine in the United States, it needed more than that, and from that resulted the 401 machine.

But that was a machine that was to take some time to come out, and in the meantime, in fact just a few days before or a few after, I have forgotten which, but after this was in its final stages, Singer asked its men to produce an improved 206 which became the 306 machine and had a replaceable cam. Instead of the cam that was in the machine with the fixed throw, it had the replaceable cam.

I would like to offer the Singer 306 machine.

(Received in evidence as Defendant's Exhibit 109.)

Mr. Pettit: And the chart showing the mechanism.

(Received in evidence as Defendant's Exhibit 109A.)

Mr. Pettit: And the mechanism itself placed on a board.

(Received in evidence as Defendant's Exhibit 109B.)

Mr. Pettit: Your Honor, you will see that this was a machine that could be produced—if I may put these up [fol. 554] here again—by looking at these you will see the mechanism is almost identical except for the fact that the eccentric has been removed and a cam has been placed on the opposite end, and then the same mechanism controlling it, the handles. This portion of the machine remains exactly the same, and this is put in in order to transmit the motion from here instead of having it transmitted from over here. I don't know how this will all appear in the record, but I am pointing to portions of the mechanism. In each case the arm is moved and moves the needle laterally.

[fol. 555] This is the mechanism that Singer's Patent Department was talking about when it asked whether, with a removable cam here, using the same mechanism here in conjunction with the removable cam instead of the fixed one, it would be patentable. This is the mechanism that they concluded would not be patentable and that they would not have any worry about.

The Court: And that is a removable cam.

Mr. Pettit: This is the removable cam. That is shown best on the machine itself over here. That is this machine, and you can——

The Court: It is on the exterior of the machine.

Mr. Pettit: It is on the exterior of the machine, and you, of course, can have as many cams as man can design. There is absolutely no limit to the potential number of cams that can be used. The difference between the two, between the 401 and this, is that in the 401 there is the limited built-in number which then can be selected by the handle. Here there is an unlimited number that can be put on manually by the person using the machine, and she selects any one she wants. When that is done, there is absolutely no difference.

[fol. 556] You can take the 401 machine and you will find that on the top of it there is also a replaceable cam. There is a replaceable cam that goes on top of the stack that you saw in the 401 mechanism. In fact, it is right there now. This can be removed, or you can have an identical cam in the stack. And, if you put this cam with this shape in the stack, then it wouldn't make any difference whether you selected the cam that is in the stack or the removable cam, you would get exactly the same design, because it has this design and the throw is identical. So far as the operation of the machine and the design that results is concerned, there is absolutely no difference between a cam that is in the machine and a cam that is placed on it once they are placed in position to sew.

That machine was hurried along because the market needed it, but Singer wanted an even better one and wanted the multiple cam idea to be used as soon as possible. The result was that they requested their engineers to design a multiple cam mechanism but one that would be usable with

the 306 machine, and the result was that they produced the 319 machine.

I would like to offer that machine in evidence.

(Marked Defendant's Exhibit 110 in evidence.)

[fol. 557] Mr. Pettit: And the chart.

(Marked Defendant's Exhibit 110-A in evidence.)

Mr. Pettit: And the mechanism that goes in it.

(Marked Defendant's Exhibit 110-B in evidence.)

Mr. Pettit: As you may see by looking at the last exhibit, they still use the same mechanism in the 306 for the purpose of control as was used in the 206. There has been superimposed on the shaft that bore the replaceable cam a set of multiple cams, each with its own follower, a rather simple arrangement and a little different treatment than the 401 but fundamentally the same concept of stack of cams and a follower to take off the information, except that here there was a follower for each cam.

This, if you will notice the chart, is just practically the 306 machine with this little mechanism placed here. It required no change in the machine that was to be manufactured. Every piece of mechanism that is not put in color here was in the old 306 machine. Again, little tooling was needed to get this machine in production and sale, and [fol. 558] this was the star Singer machine pending the ultimate production and getting into sale of the 401 machine. This is the machine, your Honor, which they sold and are still selling all over Europe.

Mr. Elkins wants to know whether you can engage two of these at the same time, and the answer is yes. You can engage two or more of them and get a different throw by whether you have one, two or three followers operating. [fol. 559] I would like to show at this moment these two multi-cam machines. This is a machine manufactured by Sankyo Seiti in Japan. It is a machine that infringes Gegauf No. 1. It is similar to the Singer 401 machine. It is an infringing machine and is one of those that was imported and, I think, will appear among the figures of imports.

The Court: You had better mark it in evidence if you are going to show it to me.

Mr. Pettit: Yes, I will mark it in evidence.

(Received in evidence as Defendant's Exhibit 111 in evidence.)

The Court: You say this Defendant's Exhibit 111 infringed on what?

Mr. Pettit: Infringed on Gegauf No. 1. It is similar to the Johnson machine or the 401.

The Court: How did it infringe? In what respect did it infringe?

Mr. Pettit: It has a stack of cams, a single retractable follower movable lengthwise to the axis of the cams to select the cam desired, and has the same mechanism for transmitting the motion to the needle. It is a plain infringement of the Gegauf No. 1 and practically a duplicate of the 401, Singer 401.

[fol. 560] Mr. Elkins: If your Honor please, that is in the nature of——

The Court: That is his opinion.

Mr. Pettit: It has a single follower.

The Court: Up to this point, Mr. Elkins, have you any dispute about the mechanical explanations of these various exhibits which have been received?

Mr. Elkins: None whatsoever, your Honor, until opposing counsel just arrived at the point of describing this machine as being practically the same as the 401. It is not.

The Court: But it does embody Gegauf No. 1.

Mr. Elkins: It does embody Gegauf 1.

The Court: That is all we are concerned with.

Mr. Elkins: As does the 401.

The Court: I am not concerned with——

Mr. Pettit: I will restrict my statement. That is what I meant by it.

The Court: —what we used to call a Chinese copy, in this case a Japanese copy. But there is no dispute but what this machine represents an embodiment of Gegauf No. 1?

Mr. Elkins: That's right.

[fol. 561] The Court: And in that respect it is an infringement on Gegauf No. 1.

Mr. Elkins: That's right.

The Court: All right.

Mr. Pettit: Right next to it, your Honor, are machines which I offer in evidence. I introduce in evidence another machine made by the same company, and imported into and sold in the United States.

(Received in evidence as Defendant's Exhibit 112.)

Mr. Pettit: This machine has been referred to in charts, in stipulations, as the old design. That is Exhibit 111, the one you are now looking at. Exhibit 112 is referred to as the new design.

The Court: Made by the same company?

Mr. Pettit: Made by the same company.

The Court: That is a Japanese machine?

Mr. Pettit: A Japanese machine made by the same company.

The Court: And what do you say with reference to this and the Gegauf No. 1?

Mr. Pettit: This is a non-infringing machine as far as Gegauf No. 1 is concerned, and you will notice that it has the barrel staves instead of the stack of cams.

[fol. 562] The Court: I see. The cam effect is produced by these ridge inserts?

Mr. Pettit: That's right, and the follower moves across the ridge inserts instead of having a stack of cams.

The Court: Concentric stack of cams.

Mr. Pettit: That's right.

The Court: And you say that it performs the same operation, serves the same mechanical purpose, but that purpose and that function is achieved without an infringement of Gegauf No. 1?

Mr. Pettit: That's correct, sir. The follower takes the information from here, transposes it to the needle through the mechanism.

The Court: Am I correct in concluding that it is the defendant's contention that this machine, Sewmor, Exhibit 112, functionally produces the same result as Exhibit 111——

Mr. Pettit: That's correct.

The Court: —without an embodiment or employment of Gegauf No. 1?

Mr. Pettit: That's correct. I don't believe that the gov-

ernment raised any question about it, but I cannot speak [fol. 563] for the government.

Again we are talking——

The Court: Wait a minute now. They are consulting on it.

Mr. Pettit: Again I want to say we are talking about the single follower mechanism. This is the fundamental single follower concept, a stack of cams.

Here are two charts which I would like to put in evidence. The first one goes with Exhibit 111.

(Received in evidence as Defendant's Exhibit 111A.)

Mr. Pettit: And it shows in color the zigzag mechanism embodied in it.

The next chart goes with Exhibit 112.

(Received in evidence as Defendant's Exhibit 112A.)

Mr. Pettit: I show these two exhibits which, respectively, show the two mechanisms. Exhibit 112A is the non-infringing; Exhibit 111A is the infringing.

The Court: Where is the follower on that exhibit, Exhibit 112A?

Mr. Pettit: Here (indicating).

The Court: Indicating in the back. I see.

All right, I see that. It presses on that rotary wheel [fol. 564] that contains the cams or the ridges. All right, I see it.

Mr. Elkins: I think your Honor was asking a moment ago as to what the government concedes. The government concedes that Defendant's Exhibit 112 is not covered by the Gegauf patent. It concedes that the function of the machine and the work product of the machine stitch patterns may be the same.

We do not agree as to the efficiency of the mechanism of this Exhibit 112 being equal to the efficiency of Exhibit 111.

The Court: Just what do you mean by the efficiency when you say the work product is the same but the efficiency is not the same? What do you mean by that?

Mr. Elkins: For example, your Honor——

The Court: One is more durable than the other?

Mr. Elkins: Several things, if your Honor please. De-

fendant's Exhibit 111, which is under Gegauf, has a number of cams, and any time one of these cams is marked or scratched or destroyed, it may be taken off and replaced by another cam, whereas in defendant's Exhibit 112 it appears that, if one surface goes off this drum, then the whole drum——

[fol. 565] The Court: You replace the drum.

Mr. Elkins: I should think so.

Mr. Pettit: Where does that appear from?

The Court: He says if one of these ridges——

Mr. Pettit: I don't know whether these can be snapped in and out or that it cannot be made so that it could, if there is desirability to that. I don't know that it appears any place that that is impossible.

Mr. Elkins: I am not meaning to testify; I am not testifying; I am merely describing the extent of the government's concession, your Honor.

The Court: You had better give me some testimony, Mr. Pettit, that this substitute for the removable cam filed in Exhibit 112, which takes it out of the Gegauf No. 1, may be functionally replaced and in what way it can be replaced.

Mr. Pettit: I will find out whether it as of the moment takes the whole thing or part of it. I will only say that if at the moment it takes the whole thing, there is no reason why one cannot be designed which will have replaceable cams there as well as the other.

The Court: It would seem so to me. Like the spokes on a wheel, to replace the spokes.

Mr. Pettit: And if the wheel were so designed that it [fol. 566] could not be done, I don't know any reason why the wheel could not be redesigned so that it could be done.

The Court: There are all kinds of wheels.

Mr. Elkins: And as to the extent of our concession, your Honor, we note from the description of opposing counsel that the follower used in Exhibit 112 has a back-and-forth motion as opposed to the follower in Exhibit 111, which merely rides on the cam and is otherwise motionless; that the follower in Defendant's Exhibit 112 is constantly moving first to the left and then stops, then to the right and then stops, and so forth, back and forth over the entire surface of a particular cam surface there.

Mr. Pettit: As I understand it, he is saying when you

get around a patent, there are some features of it that are a little different from the patent. If it wasn't so, you would still be infringing the patent.

The Court: That is so.

Mr. Elkins: And in essence, your Honor, I am trying to outline the attempt of——

The Court: The united work product of both of these machines is the same.

Mr. Elkins: Right, your Honor.

[fol. 566a] The Court: And Exhibit 112 is not an infringement of Gegauf No. 1.

Mr. Elkins: That is true, your Honor.

The Court: And Exhibit 112 may be used in the household as a substitute for 111.

[fol. 567] Mr. Pettit: I call your attention——

The Court: I asked him a question.

Mr. Pettit: I am sorry.

Mr. Elkins: I do not want to testify, your Honor. We are merely representing that it does not appear that both machines are alike in relation to their mechanisms. There might be a difference in the effectiveness and the durability of the mechanisms of the two machines. We do agree that the stitch pattern created would be the same in each machine.

The Court: And the household work product would be the same.

Mr. Elkins: It would be.

The Court: That is another way of saying that one could be substituted for the other.

Mr. Pettit: I call your attention to the details with respect to this machine, as set forth in paragraph 95 of the statement of facts.

The Court: Gentlemen, I will have to recess at this time. I have some lawyers coming in.

All right, tomorrow morning—at what time—half past ten all right?

(Adjourned to Wednesday, May 10, 1961 at 10.30 o'clock a.m.)

[fol. 568] UNITED STATES OF AMERICA,

vs.

THE SINGER MANUFACTURING CO.

New York, May 10, 1961, 10.30 o'clock a.m.

(Trial resumed.)

Mr. Elkins: If your Honor please, I would like to make a short statement so as to clarify the extent of the government's concessions in relation to Defendant's Exhibit 112A. That is the sewing machine mechanism, your Honor, which is not covered by Gegauf patents.

The Court: That is the one with the barrel stave design——

Mr. Elkins: Yes.

The Court: What I call the barrel stave design.

Mr. Elkins: That is exactly the one.

The Court: Are you changing your mind overnight—have you changed your mind and your position?

Mr. Elkins: No, your Honor, if I may clarify it, please.

The Court: All right.

Mr. Elkins: We concede that it is not covered by the Gegauf patent, Gegauf No. 1. We also concede that it is [fol. 569] a machine-carried multiple-cam machine, as we have defined it in the agreed statement of facts, the essential part of which I will read to the Court, if I may.

"A household sewing machine which, in addition"——

The Court: You are reading from what now?

Mr. Elkins: The agreed statement of facts, paragraph 8(c) on page 4.

The Court: All right.

Mr. Elkins: We concede that it is "A household sewing machine which, in addition to straight stitches, produces without any artistry on the part of the operator, various ornamental and functional zigzag stitch patterns, the preselection of which must be made by the user to a device such as a dial, handle or knob, located on the exterior of the machine"—and we want to add to that, your Honor,

the limit of the concession—we cannot concede that it is the functional equivalent of the mechanism in Defendant's Exhibit 111A, and that, as your Honor recalls, was a stack of rotary cams.

The Court: You are using a word of art when you use the phrase "functional equivalent."

[fol. 570] What do you mean when you say "functional equivalent"?

Mr. Elkins: We mean to say, your Honor, that we cannot concede that its operation is as efficient, as effective or that its work product is as good as the mechanism presented in Defendant's Exhibit 111A.

The Court: In what respect do you contend it is not as efficient?

Mr. Elkins: I am saying, your Honor, that we cannot concede that it is.

The Court: No. I asked you in what respect does the government contend that this barrel stave cam machine—I call it that in describing the cam—in what respect do you maintain there is this difference in work product?

Mr. Elkins: May I say first, your Honor, that if it appears or if it is so that defendant is offering this barrel stave machine as being the equivalent of the rotary stack type of machine which is represented by the Gegauf patent, then we think that the defendant should, in presenting the machine, in trying to establish that point, do so by testimony rather than from statements of counsel.

[fol. 571] The Court: Well, I indicated that might be desirable. I understand that it is simply the defendant's contention with respect to this particular machine, that although the mechanical design is different, particularly with reference to the design of the cam, that it produces the same work product when put to use as does the Gegauf machine, and I understand it is the defendant's contention that this barrel stave cam machine is not an infringement of Gegauf 1, and that they are without any patent rights under the Gegauf patent to attempt successfully to bar its importation by the Japanese manufacturer.

Do I correctly state your position in substance, Mr. Pettit?

Mr. Pettit: Yes, sir.

[fol. 572] Mr. Elkins: And there is nothing in what you

have said, your Honor, which is not within the government's concession except that we cannot concede that the work product that is produced by this barrel stave mechanism is equivalent to the work product of the rotary cam type machine.

The Court: But with that one exception you do not change your position as stated last evening.

Mr. Elkins: And as stated by your Honor here, and that's about it, your Honor.

The Court: I have suggested to Mr. Pettit that he produce a witness, if he can, who will testify as to the result of the operations which can be secured and of the work product which can be secured from this Japanese machine which has a machine-carried multi-cam apparatus zigzag machine which does not infringe on the Gegauf patent. I understand he was going to do so.

Mr. Elkins: Thank you.

The Court: Yes. All right. You may continue.

There was another point about that machine, and I thought it was going to be checked into over the recess, and that is whether or not these, I call them, barrel stave cams are replaceable or whether the entire cam which represents [fol. 573] all of the barrel has to be replaced. Have you checked into that?

Mr. Pettit: I have checked into it, and I have been informed—I am not sure of this; I want to check into it further, but the information I have obtained is to this effect: that in either instance, whether you are speaking of the cam mechanism in the Singer machine or the barrel stave mechanism, if one of the cams is injured, the whole stack would have to be removed from the machine and a mechanic would have to replace the damaged cam.

The Court: Does that replacement in this barrel stave mechanism require a replacement of the entire barrel or can there be sort of a cooperage operation, replacement of only one stave?

Mr. Pettit: That is my understanding. A mechanic can install the particular barrel stave.

The Court: The particular stave or particular cam segment effect.

Mr. Pettit: I do not want to be representing that as the

fact here. That is my present understanding, but I want to check into it to make sure.

The Court: That is the way it appeared to me to be from my visual inspection of it, but I am not a mechanic or machinist.

[fol. 574] Mr. Elkins: In relation to these matters, your Honor, can we have it in testimony? I believe that we would have difficulty without that.

The Court: Yes, we will have it in testimony. If you will make a little note of that on your yellow pad, I would appreciate that.

All right, now, continue along.

Mr. Pettit: Yesterday we introduced a machine covered by paragraph 95 of the statement of facts. I would now like to introduce a machine of the type covered by paragraph 94 of the statement of facts. This is another non-infringing machine, your Honor.

The Court: This is manufactured where?

Mr. Pettit: This is manufactured in Japan.

The Court: Japan. And it has a tag on it which says "Universal."

Mr. Pettit: It is called the Universal TViewer.

The Court: Is there any objection to this being received in evidence?

Mr. Elkins: No objection to it being received in evidence, your Honor.

(Marked Defendant's Exhibit 113 in evidence.)

The Court: Are you saying that this machine, Defend-[fol. 575] ant's Exhibit 113, is a multi-cam machine-carried zigzag machine which does not infringe on Gegauf No. 1?

Mr. Pettit: Yes, your Honor, and that is so stipulated, if you will look to the paragraph number that I just mentioned, paragraph 94 of the statement of facts.

The Court: Is it the defendant's contention that this machine, now Exhibit 113, produces the same work product?

Mr. Pettit: That is correct.

The Court: The same work product as your Singer machine which embraces and employs the Gegauf No. 1 patent?

Mr. Pettit: That is correct.

The Court: Will you make a note on that to have your witness testify as to that?

Mr. Pettit: I would like to offer as an exhibit a drawing of the same machine with the zigzag mechanism in color.

(Marked Defendant's Exhibit 113-A in evidence.)

Mr. Pettit: Your Honor, you will notice that the difference here is that there is a flat disk with cams on top, a circular disk.

[fol. 576] Mr. Elkins: Excuse me, Mr. Pettit. I believe that this should be in the form of testimony. We find extreme difficulty in filling in blanks here and there inasmuch as there is no witness on the stand.

The Court: This is very plain. Why do you need a witness for this? He shows me the machine. It appears from a visual inspection that the machine has a cam somewhat in the nature of a phonograph record, that the follower appears to be an arm similar in general construction to what we find holding a needle, and I don't see any need for testimony on this.

If you want testimony, produce a witness. This is as plain as the nose on my face, to me, when I look in the mirror, and I have quite a big nose.

Mr. Elkins: If your Honor please, while opposing counsel is making his statement, he might—I don't mean through any design—omit an essential fact where there is no witness on the stand by which we can fill it in.

The Court: He is calling to the Court's attention things which are obvious to the Court without him making the comment, but he thinks the Court needs that aid and assistance. And, while at times I might be annoyed, I try not to be. I can see it without his comment, but he is trying [fol. 577] to help the Court.

For instance, don't you see that cam on this Defendant's Exhibit 113?

Mr. Elkins: Yes, I do, your Honor.

The Court: You have just pointed to it. It is the pink mechanism which apparently is like a phonograph record. Now, don't you see the follower arm on this Defendant's Exhibit 113?

Mr. Elkins: I do, your Honor.

The Court: Where is it?

Mr. Elkins: Right there, your Honor.

The Court: Right. Perfect. You don't need a road map, do you?

Mr. Elkins: Your Honor, I believe that we should have testimony as to the drawing which is Defendant's Exhibit 113-A, and I believe that we should have testimony or the defendant should produce testimony——

The Court: I suppose technically speaking he is entitled to it, Mr. Pettit. Will you produce, some time during the trial, the man who made these drawings, these sectional drawings, to say that they accurately represent on the scale model these exhibits to which we have referred.

Mr. Pettit: And I will have him testify as to what they [fol. 578] are.

The Court: Not too much testimony, but simply sufficient to satisfy Mr. Elkins.

Mr. Elkins: Your Honor, I see no reason why we couldn't have the testimony now.

The Court: No. Well. I see a reason. I am having a discussion now of the government's exhibits. In order to help the Court understand the government's exhibits and their significance, Mr. Pettit feels, rightly or wrongly, that he should explain to the Court the mechanism of these various machines. I thought he might save himself that trouble, but he is a careful lawyer and he wants to have it in the record. Perhaps, if I were in his position, or if you were, you would also want it in the record. So I find no fault with him.

Mr. Elkins: We do not mind it being in the record, your Honor, but a description of these machines will necessarily——

The Court: Let's get on, Mr. Elkins, please. Let's get on and try the case.

Go ahead, Mr. Pettit.

Mr. Elkins: I am holding in my hand——

The Court: There is no matter before the Court which requires a ruling at this time. Mr. Pettit's statements are [fol. 579] not evidence.

Mr. Pettit: Your Honor, I could with just as much ease——

The Court: No, please don't begin to answer comments. Continue with what you were going to do.

Mr. Pettit: I want to point out to you that what I am saying here is something that is taken even from the statement of facts that he has agreed to, so there is not much problem. If there is any misstatement or mistake I make, it can be corrected by looking at the corresponding paragraph containing the statement of facts to which Mr. Elkins has agreed.

The Court: All right.

Now will you give me that machine, Defendant's Exhibit 113, up here so I can see it? I want to see something. Do you want to come over while I turn the wheel? I want to see the way the cam rotates. I want to see the operation of the follower.

[fol. 580] The Court: Now it is set by this manual dial on the front, and as it rotates I can see that the follower follows the configurations of the cam.

Apparently the cam is pink plastic. Apparently it provides for six variations or six cams.

All right.

Mr. Pettit: Your Honor, I would like to call your attention to the fact that the stipulation of fact cites as examples of such a machine-carried multiple-cam machine are the Feather Universal TViewer Model FSZ120, which is that machine (indicating), the Kyokuto Modern Model No. 116, the Kyokuto Vogue Stitch Model D and the Kyokuto Alden's Cam 3-in-1.

In other words, they are two manufacturers and four different models of that type of machine that we know of.

The Court: The court observes it is a rather attractively designed machine, this Exhibit 113. Visually it has—of course I do not represent the female point of view, but apparently it has the same design appeal as one of the Singer machines—if not better—according to modern concepts of domestic decoration.

All right.

Mr. Pettit: I would like to introduce in evidence a ma-
[fol. 581] chine made by Borletti.

The Court: Who is Borletti?

Mr. Pettit: That is a European manufacturer.

The Court: Where does he manufacture? Where does this company manufacture?

Mr. Pettit: In Europe.

The Court: Where in Europe, Italy? It is an Italian concern?

Mr. Pettit: Yes, it is an Italian concern.

The Court: All right.

(Received in evidence as Defendant's Exhibit 114.)

The Court: Where is this described in the Statement of Facts?

Mr. Pettit: This is paragraph 96 of the Statement of Facts.

The Court: And you say this is a multi-cam machine-carried zigzag machine?

Mr. Pettit: Yes, sir.

The Court: And where is the cam on this?

Will you open the door and show me.

(The Court examines exhibit.)

The Court: I see.

Mr. Pettit: The difference between that machine and the [fol. 582] other—and the reason it is not infringing is that the cam follower is not retractable from the cams.

The Court: And you say that this Borletti machine, which is now Exhibit 114 in evidence, is not an infringement?

Mr. Pettit: That's correct, sir—and that is so stipulated in paragraph 96 of the Statement of Facts.

The Court: What is this sketch here?

Mr. Petitt: This sketch, which I would like to offer in evidence, is a drawing of the machine with the zigzag mechanism in color.

(Received in evidence as Defendant's Exhibit 114A.)

The Court: I see it. A very ingenious piece of mechanism. It appears to work, too.

Mr. Pettit, sometime during the case, if you can bring somebody in to show us how these things actually operate by stitching—can you do that?

Mr. Pettit: I do not know whether we have all these machines set up for operation. I will check and see if we can do that.

The Court: If you can—I see the way it works. It is quite plain, isn't it, Mr. Elkins?

Mr. Elkins: I see how it works.

[fol. 583] The Court: You see it?

Mr. Elkins: Yes.

The Court: It is quite plain.

All right.

Now you have shown me two Japanese machines and this Italian machine—three machines so far.

Mr. Pettit: Three non-infringing machines.

The Court: Yes.

Mr. Pettit: Three different types of non-infringing.

The Court: Yes.

Mr. Pettit: Those are the only exhibits that we have on the non-infringing type at the moment.

This machine I offer in evidence—this is a Japanese-made machine. That is a non-infringing machine, but it is a barrel stave type. I want to show the set-up under which the barrel staves can be removed and it becomes a manual machine.

The Court: And that is not an infringing machine.

When we speak of an infringing machine we mean a machine that infringes Gegauf 1.

Mr. Pettit: Yes.

The Court: Mark that in evidence.

What paragraph is this described in?

[fol. 584] Mr. Pettit: Paragraph 94 describes the same machine that we had introduced before—no, this is not the same type.

The Court: No, this is Vogue.

Mr. Pettit: It is the same machine as mentioned in paragraph 94.

(Received in evidence as Defendant's Exhibit 115.)

Mr. Pettit: Your Honor, that is a non-infringing mechanism. On its removal, this machine becomes a manually operable machine.

The Court: And this whole mechanism for a zigzag machine can be physically lifted out?

Mr. Pettit: Physically lifted out and put back. When it is in, it is a multi-cam machine; when it is out, it is a zigzag machine.

There is a feature about this——

Mr. Elkins: What paragraph is that in, Mr. Pettit?

Mr. Pettit: 94.

The Court: It is marked Exhibit 115.

Mr. Pettit: This machine can be covered by the Harris patent——

Mr. Elkins: This is a statement, not testimony.

[fol. 585] The Court: He is explaining the machine. I do not see that we are too much concerned with that because the real charge is—the basic charge of the government is that Gegauf No. 1 is the so-called fly in the ointment.

Mr. Elkins: That is not exactly it, your Honor. We charge that these patents were grouped in Singer. There were two that they got from Gegauf; Gegauf 1 and Gegauf 2. They had three of their own to cover it.

Mr. Pettit: Your Honor, the reason I wanted to show this machine is because it is of a construction used by many other Japanese machines that causes the machine to violate the Harris patent.

I want to point out the mechanism that is in there which violates the Harris patent when used in conjunction with a mechanism that violates Gegauf No. 1.

It violates Harris only when it is used in conjunction with that mechanism, so that when used with this non-infringing mechanism it does not violate the Harris patent.

It is just the concentric that throws the needle and the cams or the mechanism—that goes through this concentric first, and then to the needle. In the 401 the concentric is [fols. 586-587] not there. It goes direct through the Pitman arm to the needle bar.

* * * * * * *

[fol. 588] Discussion of Significance of Exhibits By Mr. Pettit

Your Honor, the first letter that I want to discuss is Government's Exhibit 1, a letter of October 28, 1952. This [fol. 589] letter, as I pointed out before, was occasioned by the discovery of Singer of the Vigorelli machine which had a removable stack of cams and a single cam follower that moved lengthwise to the cam axis—and in view of the fact that it had this removable stack of cams, it had two concepts in it: one which related to the use of the old 206 type of mechansim in conjunction with the removable

cam, and a question is raised as to whether using the removable cam—and it did not make any difference whether it was one or a stack or a half dozen—the question was, once the concept was originated of using a removable cam with the old type of mechansim, in the 206, was that patentable.

This letter is directed to that problem, and that problem only, but it has significance in the light of what the government used it for, although it has no significance in this case in so far as it merely relates to the 306 machine.

The government offers this in evidence in order to show Singer's predisposition to enter into a cross-license agreement even though it had power to cast doubt on the validity of the patent.

I do not know whether they realize what that concept leads to, when applied to the facts that we have in this [fol. 590] case; but it runs all the way through the Government's case and is applied with reference to almost every letter and every agreement—and although your Honor asked them whether that was not the type of thing that almost every sensible manufacturer did—and some pages later Mr. Elkins answered yes, and in effect said he would discuss the letter no further, he and Mr. Weinstein repeatedly came back to the principle involved, and I just want to consider that principle for a minute as it is applied to this case.

Singer does business all over the world—and that is set forth in the statement of facts. This stems from the proposition that if Singer goes to a patent owner seeking a license, and the patent owner says, "If you will give me an agreement that you will not attack my patents, you will not attack my patent applications, I will give you a license under all of them."

Normally, Singer would be delighted with that arrangement and would certainly accept it, but Mr. Elkins and Mr. Weinstein say, No, that it seems to be not only the moral but the legal obligation to fight the battle of the natives of every country in which a patent might be taken out by this owner who has his own patent and correspond- [fol. 591] ing patents in many countries of the world.

Under that philosophy we would have to put on our armor, consisting of the creation of 155 patent attorneys

in 155 countries, if it happened to extend that far, and we would go into the mountains of Nepal to protect the Nepalese; we would go into Saudi Arabia to protect the Arabs, and into the Congo to protect the Africans. We would have to fight if we have any idea that a patent was too broad, whatever that may mean.

And Mr. Weinstein has gone so far as to say that the agreement by which we refrained from interfering with the European owner of patents throughout the world is illegal per se because of the provisions that we won't interfere with it no matter how broad he has it.

Now that theory, I think, is just wholly and completely untenable, both in theory and in law and in practicality.

I think they make it for the purpose of showing evil intention on the part of Singer, and then for the purpose of bringing that evil intention into the United States, although the agreements made are quite different in what they say with respect to the foreign countries and the United States, but they also do it without a realization that the [fol. 592] foreign-country situation is quite different from that in the United States.

In most of these countries, certainly in large numbers, they do not even have inspection, and in some of those where they do have them, they are filed without any form of contest, and any person in the world is free to go in and contest the patent at any time.

Now an example of what would happen is rather indicated in the next letter, Defendant's Exhibit 5, dated December 16, 1954, addressed to Mr. Waterman. That letter, on page 4, points out that there was a "recently published Brazilian patent application," and it gives its number and its date and was filed by Brutsch & Co.

It goes on to specifically say that the Singer patent department thinks the claim is too broad.

You will remember that this is the same country in which Vigorelli had a patent application and in which Mr. Elkins pointed out that we had considered the Vigorelli patent broad, and that notwithstanding that we obviously, with evil intent, had withdrawn our opposition in Brazil—apparently much to the detriment of the Brazilians.

Here is the same country; here is the same opinion that [fol. 593] it was too broad.

Now it just happens that this is a good example of what would happen to Singer if it just went on the theory that it should always do battle, no matter what it could get without it.

It filed briefs; filed oppositions. They accepted the briefs and still have them, but the opposition was rejected.

The net result is that today Singer cannot sell its 401 machine——

Mr. Elkins: Excuse me, your Honor. This is not in the exhibit.

Mr. Pettit: It will be; I will get it in evidence, I will put it in.

This shows that this was too broad. It shows that an opposition was filed. You cited the letters that showed the documents went there, and the Vigorelli documents—and this thing was pointed out——

The Court: How are you going to establish this?

Mr. Pettit. I will have the letters that show——

The Court: Have we marked them already?

Mr. Pettit: No, I have not.

The Court: You had better show them to Mr. Elkins and [fol. 594] let him look at them—during the recess.

Mr. Pettit: Now, your Honor, as a result of that we could not sell the 401 machine in Brazil today unless or until we go into Brazil with another proceeding to have the patent declared void, in so far as it applies to the 401 machine, and win the patent.

That is a very important qualification, because that is the procedure that is available in almost all these countries to anybody who has any interest in it.

Singer's saying that it will not interpose an objection is rather meaningless because anybody who has an interest in having the patent cut down if it interferes with them can do so at any time in another proceeding.

This letter of December 16th also shows that Singer recognized that competitors' "multi-cam and cam selector devices were developed prior to the conception" of Singer's construction, and that there was a possibility that competitors "may obtain patent claims in one or more countries including the United States," which would be infringed by the Singer 401 machine.

That appears at the bottom of page 2.

[fol. 595] I will read the bottom of that page:

> "Since it would appear that each of the competitors' multi-cam and cam selector devices were developed prior to the conception date of present Singer construction, there is a possibility that one of our competitors may obtain patent claims in one or more countries including the United States, which claims may be infringed by the present Singer machine."

It also shows that Singer believed that among competitors who might obtain patents containing such claims were Vigorelli, Brother, Husqvarna, Brutsch who has just been mentioned, and possibly others. On page 3 it points out that Japanese Brother has a machine which indicates that it might be ahead in the field. It points out Brutsch on page 3. It points out Husqvarna on page 5. Thus it shows an awareness, and a complete awareness, of its danger in the field.

The letter also shows that due to the fact that pending applications were not open to inspection until published for opposition, it was impossible to predict who, if anyone, would acquire dominating patents in the field, and I will read from page 5:

> "Because pending patent applications of our com-
> [fol. 596] petitors are not open to inspection until they are published for opposition, it is impossible to predict who, if anyone, will acquire dominating patents in this field."

And finally Mr. Stanford advised Singer that in light of the foregoing the manufacture and sale of its multi-cam constructions might result in infringement claims of patents. He states on page 6:

> "The manufacture and sale of the multi-cam constructions devised by Singer may ultimately result in the infringement of claims of patents which may issue to one or more of our competitors."

For a patent man that is just a plain statement that our constructions are headed for various infringement suits.

He says:

> "However, if the Company wishes to produce and market machines incorporating the stacked cam arrangement we would recommend that it proceed to do so and that each question of infringement of a competitor's patent be dealt with when and if it arises."

At that time, of course, Singer was not aware of the constructions of the claims and what might come out of them, but it was aware that it was in grave danger in the [fol. 597] manufacturing and sale of its machines. If you looked at paragraph 26 of the statement of facts, you would see that by April 22, 1955, Singer acquired copies of two Italian Vigorelli patents.

The first of these patents, which had a filing date of January, 1953, which was earlier than Johnson's conception date of his machine, related to a removable stack of cams with means of taking information from any cam. It might have covered the 319 as well as the 401 machine and probably would have and, absent Gegauf and Harris, it would probably have covered them today. So Singer had the knowledge that the Vigorelli single cam machine would be ahead in the United States. This was at a time, your Honor, before Singer had acquired the Harris patent. So as of this moment it looked as if Vigorelli would be ahead in the United States on the single follower.

The second patent, with the filing date of September, 1953, subsequent to Johnson's conception date, related to taking the information from two cams at the same time. That was the heart of what was left of the Johnson application after they had left out of it anything relating to the single follower and the multiple cam. Thus the situation [fol. 598] was that, although Johnson would dominate the Vigorelli disclosures in its second patent which related to taking information from two cams, the second Vigorelli patent would dominate the Johnson construction in Europe wherever Vigorelli had his patents. That, of course, was the situation that gave Singer great concern, and it proceeded to see what it could do about it, and it looked diligently for patents that it might acquire, and on June 16th it found the Harris patent.

This patent disclosed a mechanism which would and could sustain claims covering the stack of cams and the single follower. However, it did not have a claim asserted to that mechanism. It was therefore necessary to reissue the patent, get a reissue application, and insert the claims in them.

Singer bought this patent for three reasons, as appears from the Williams memorandum of June 16, 1955, Government's Exhibit 3. It shows that Singer obtained the patent, first and foremost, in the hope that it could get a patent in the United States based on covering the multi-cam mechanism; second, that if it was not able to do that, it might at least get into an interference for the purpose of [fol. 599] learning the situation and learning who had the prior claim in order to be in a position to negotiate with them; and, third, with the hopes and expectations that, if it found that no one could get a patent, it could then be assured that it could go ahead and sell its machine in the United States.

In acquiring this patent, Singer at the same time acquired from Harris all of his corresponding patents that had been acquired in various countries. They are listed on page 7 of the Williams memorandum. The net result is that up to this time Singer has been desperately looking for means of protecting its commerce. It has now gotten an instrument that at least it can use to fight with.

It proceeded to put the claims in order in the Harris Reissue application, and in fact it was ultimately the claim put in there by the Singer Patent Department, Claim No. 22, that was used by the Patent office to suggest to various persons the possibility of an interference if they could meet the priority date requirement.

That notice, by the way, was sent to Vigorelli, sent to Gerauf, and sent to Johnson, and it was interesting that it was sent to Johnson because Johnson did not even have [fol. 600] a claim in on the single follower feature, and it was sent to him because it was such an intergral part of all the disclosures in the Johnson application and so much the heart of his whole machine that the Patent Department even sent a notice to him to see if he wanted to contest it.

As we will show later, neither Vigorelli nor Johnson could meet the priority date requirement that would establish even the right to get into interference, and therefore

the interference was ultimately set up only between the Gegauf and the Harris application.

On June 16, 1955, the Patent Department of Singer wrote a letter to Dr. Lando, which is Defendant's Exhibit 11. This letter was seeking information as to whether Singer could do anything with its Harris patent in Italy to beat Vigorelli. There were several problems involved in it. The first problem was whether, in Italy, there could be an amendment or reissue corresponding to the insertion of the claims in the Reissue patent application in the United States, and the second problem was whether, even if you could not do that, the patent could nevertheless stand up and beat Vigorelli.

[fol. 601] It shows first that Singer recognized that Vigorelli's Italian patent would be infringed by the Singer 319 machine which Singer was contemplating selling in Italy. This appears on page 1 where it refers to Vigorelli's ownership of Patent No. 497,557, claiming the broad idea of a zigzag type sewing machine having a plurality of rotary cams and means of selectively connecting any one of such cams to the needle bar so as to produce a predetermined pattern of zigzag stitching. Such a claim would apparently be infringed in Italy by the zigzag type machine which Singer was contemplating making.

It goes on to tell Dr. Lando that Singer acquired the Harris patent and that it would appear that Harris was the prior inventor of the common subject matter disclosed in the Italian Harris and Vigorelli patents. It said on page 3 that Singer attached vital importance to this, "thus we would appreciate receiving an opinion in connection with our questions at the earliest possible opportunity. If, in your opinion, we could take any effective steps to improve the value of the Italian Harris patent, we would appreciate your advising us accordingly, if possible, by cablegram."

It shows that Singer was endeavoring to find whether [fol. 602] there was any possibility that it could get a patent in Italy ahead of the Vigorelli and, if not, whether it could not claim prior invention of the subject matter common to the Italian Harris and the Italian Vigorelli patent.

* * * * * * *

[fol. 603] Mr. Pettit: Your Honor, this brings us to the point where Singer first thinks in terms of approaching Vigorelli. Before going into the first letter by Mr. Lightner on that, I would like to refer to Defendant's Exhibit 4, a letter of December 2, 1954, to Mr. Waterman from Mr. Stanford of the Patent Department, to show that not only was Singer worried but that it tried to do something about it.

It will be found from the stipulations, paragraphs 20 and 26, that it is stipulated that after discovery of the Vigorelli machine, in the letter of October 28, 1953, Singer was seeking all information possible to determine whether patents and patent applications would interfere with distribution of [fol. 604] Singer machines and that during the development of the 306, 319, 401 machines Singer made investigations to determine if it were free from a patent standpoint to market these machines in the various countries of the world.

In this letter of December 2nd the Patent Department calls attention to the situation, saying:

> "Recently in several foreign countries there have been published for opposition adversely-owned patent applications disclosing and claiming multiple-cam zigzag stitch sewing machines of the type adapted for family use. We feel that our competitors have on file many patent applications for multiple-cam machines and that the applications will soon be published in the major foreign countries. Indications show that at least some of these applications were filed one to two years prior to ours and, if granted, will interfere with our world-wide distribution of sewing machines of the type like the newly designed Perla (modified Class 306 W) and Johnson (Experimental Model 282) multiple-cam zigzag machines."

[fol. 605] It goes on to say:

> "However, we may be able to prevent the granting of many of these patents with broad claims through opposition proceedings, in the event that we can prove that the claims are anticipated by prior patents, publications, or machines."

It then suggests on page 2:

> "We believe that now is the time to begin to develop a defense, and that it would be highly desirable for us to acquire through our foreign friends copies of publications which disclose multiple-cam zigzag sewing machines. By publications we include all periodicals such as women's magazines and trade journals, as well as advertising brochures, in such publications which bear an early publication date and particularly those published prior to the year 1954."

Then at the bottom of the page it says:

> "In view of the above, we think it would be well if our foreign friends would furnish us, at the earliest opportunity, with all publications, instruction books and advertising material which discloses multiple-cam zigzag stitch sewing machines wherein various cams may [fol. 606] be selected for imparting different patterns of lateral zigzag movements to the needle. Obviously, a request for this information from your office would bring quicker results."

Whereupon Mr. Waterman's office wrote Defendant's Exhibit 6 dated December 20, 1954, and Defendant's Exhibit 7 with a similar date. The first of these letters was to Mr. Evans, the Italian representative, and the second of them was to Mr. Adamson, the German representative. In each instance, in the third paragraph, the letter states:

> "In view of the foregoing it would be highly desirable for us to acquire copies of publications which disclose multiple cam zigzag sewing machines. By publications we mean all periodicals such as women's magazines and trade journals as well as advertising brochures, instruction books and adjuster's manuals."

These, your Honor, are for the purpose of seeing if they could in any way limit patents in the field.

They received answers, the first being Defendant's Exhibit 8 from Mr. Adamson, a letter dated January 3, 1955, [fol. 607] and the second being Defendant's Exhibit 9, being

from Evans and dated January 12, 1955. In each instance it is seen by the letter they made rather exhaustive searches and found nothing that would be helpful, and nothing was ever turned up from that source. We will see that that same procedure is followed later on when we come to the Gegauf matter.

Now we are at the point where Singer is worried because it is thinking in terms of approaching Vigorelli to see if it could not clear the field for its machines. Mr. Lightner writes on August 16, 1955, to Mr. Evans, Defendant's Exhibit 12, and I will call your Honor's attention to the fact that Mr. Elkins made no reference whatever to this letter although he made reference to Mr. Lightner's letter written later, in September. Defendant's Exhibit 12 is dated August 16, 1955, signed by Mr. Lightner and addressed to Mr. Evans. He states:

> "In connection with the developments which we have underway in the matter of zigzag machines, we find that there probably is some conflict between patent rights which we have, or which we expect to obtain, and rather similar patents that are being obtained by Vigorelli."

[fol. 608] In the second paragraph it is said:

> "It is altogether probable that we may become involved in litigation with Vigorelli, not only in Italy but also in some other countries, unless by talking matters over with them we can find some basis of agreement which would enable us to be free from claims by them, and perhaps accord similar immunity to them with respect to claims by us based on our own patent rights."

There, your Honor, is a clear expression by Mr. Lightner of the type of agreement that he was looking for, an agreement that cross-licensed, opened the market to Vigorelli and opened the market to Singer wherever either of them had any patents that would affect the multiple-cam machines. He then goes on to show that we have no contact or connection with Vigorelli. He says:

> "The question is how to initiate such a discussion, and it is that which has caused me to write to you."

Then at the last page, which you will note is the very beginning of any negotiations, he states:

> "I do not know whether I can get Mr. Stanford to return to Italy just at this time for the purpose of tak- [fol. 609] ing part in such negotiations, but I do know that he feels that it is very important that we make progress without wasting too much time."

You will remember in connecton with this that in the very last document before the very last agreement, the assignment of Gegauf's patent application, the memorandum was drawn up for Mr. Stanford's benefit to take to Europe, and I point this out because, as the documents will show, Mr. Stanford was the key man in these negotiations from the beginning to the end and took part in practically all of them.

By letter of August 30, 1955, which is Defendant's Exhibit 13, Mr. Lightner received a reply from Mr. Evans. The most significant feature of this letter is that it shows that even the Italian representative had no contact wih Vigorelli. In the second paragraph it says:

> "Our relations with this competitor are friendly enough though our contacts are few and far between. Dr. Lando had some dealings with Mr. Vigorelli and his assistants during the war years, but has not had occasion to see much of them since, nor have my meetings and Mr. Baumann's during recent years been more [fol. 610] than occasional ones."

He goes on to say in the next to the last paragraph on that page:

> "However, should such an encounter be desired we would prefer the occasion to appear a fortuitous one, . . ."

and it ends: "Such a meeting would be arranged so as to allow Mr. Stanford time to get here."

That brings us to Government's Exhibit 4, Mr. Lightner's letter to Mr. Evans. This letter was read at length and constitutes practically the foundation of their whole case because they found a word in it they liked. They did not read the earlier Lightner letter because it might affect that word a

little bit. They made not too many comments on this letter, although they read it almost in full.

Mr. Elkins said that "the significance of this document is that it does, as we say, set forth the substance for the benefit of Mr. Evans of Singer Italy of the first approach that will be made to Vigorelli." I don't know whether it sets forth the first approach that will be made. It sets forth an approach that was suggested and it asked Mr. Evans' idea on it. In any event, the approach set forth was a possible [fol. 611] one, although the portion the government read and stressed was not set forth to Evans as an approach to be used. But it well may have been. I would like to read the beginning which says:

> "In my letter of August 16th I commented that it was probable that we might become involved in litigation with Vigorelli in Italy or elsewhere. For that reason it seemed to be desirable to try to talk matters over with them to find some basis of agreement."

In referring back to that letter in which he pointed out he wanted to find some basis of agreement, I think he was clearly referring to the basis of agreement that he had set forth in his earlier letter in August. He tells Mr. Evans on page 2:

> "Unless we are able to come to some agreement with Vigorelli, we will, of course, institute proceedings in Italy in due time seeking to invalidate such patents as Vigorelli has received, and we will do the same thing in France and in other countries in accordance with the proper procedure in each country. This litigation will undoubtedly result either in the cancelling of their patents and patent applications or, at any rate, severely [fol. 612] limit their claims."

Now, your Honor, whether that was an approach to be used, a forceful, threatening one, with Mr. Vigorelli, whether it was to be the approach that Mr. Evans was to use I don't know, but it is certainly one approach that could be used and with great justification. We, after all, had the Harris patent pending in Italy and it had an earlier date than Vigorelli's. We had the Harris patent pending in

France and it had an earlier date than Vigorelli's. We had the Johnson application pending in the United States that could cause Vigorelli difficulty in the sale of his multi-cam machine with a plurality of followers in the United States which he, of course, could use to interfere with us in other countries.

[fol. 613] There was also the fact stated that Vigorelli was infringing two other patents of ours—not material to this case, but he was infringing them.

Therefore, Singer was in a position to use a tough, hard-talking line of approach. It could have used another one in which it went to him and said, "We are helpless; you have beaten us. You think all your patents are good. Won't you please show mercy and give us a license?"

Now as kind and gentle a man as Mr. Vigorelli is, I do not believe that that would have been a very successful or impressive approach.

This is obviously an approach which is letting a man know that if we cannot get a cross-license we are going to fight him every place we can—the technique that is used by almost every negotiator that wants to get a license under a patent, and I daresay that if we had wanted to litigate all over the world, in the seventeen countries in which Mr. Vigorelli had patent applications pending, we could probably have established our superiority with the Harris patent in some of those countries.

Now Mr. Lightner goes on to say:

> "On the other hand, if we were to refrain from instituting such proceedings and if we were to withdraw [fol. 614] the Brazilian opposition, their applications might develop into rather broad patents which would have a dominating position in the industry. We ourselves hold some patents and have patent applications pending which would make trouble for Vigorelli if we were engaged in litigation with them, or which would greatly strengthen and broaden the patent situation if our position and their's could be pooled by some mutual agreement."

Now, your Honor, I think that a patent situation of two companies is strengthened by cross-licensing. When a company can now operate under its own license or licenses, and

also operate under the license or licenses of a competitor, it is quite clear that its patent situation has been broadened and strengthened.

It is perfectly apparent from the earlier part of the letter and the subsequent references in this letter that that usual arrangement is what he is talking about—and there is nothing left except the one word that "could be pooled by some mutual agreement."

Mr. Elkins, I think, admitted that there was no particular meaning to the word "pooled."

There is no technical meaning to the word "pooled." It [fol. 615] can be used in many senses by many people. I think it is a perfectly normal thing for a man to think that patents are pooled if you give your license on your patent to the other fellow, and he gives his license to you—and there is not the slightest indication in one single document, from beginning to end of this whole series, that indicates that Singer was ever interested in anything other than getting cross-licenses.

The Court: Were those cross-licenses that Singer sought to get from Vigorelli all pertaining to the multi-cam machine-carried sewing machines?

Mr. Pettit: Yes.

The Court: And no other?

Mr. Pettit: That's correct.

The Court: No other exchanges?

Mr. Pettit: No other exchanges.

The Court: It was not a general pooling of all patents?

Mr. Pettit: Oh, no, your Honor. The agreement is perfectly clear on it. It specifies the patents that are involved. It is broad in one sense and narrow in another.

Your Honor, I would like to give you, for your use or [fol. 616] to throw away, as you see fit, this, because I think it may be helpful.

Let me state what it is before you object to it. This is a tabulation——

The Court: They may not object to it. This is just given to me by way of a brief?

Mr. Pettit: Well, it isn't a brief; it is an aid to you in finding provisions in these three agreements.

The Court: You do not want to have it marked in evidence?

Mr. Pettit: No. I would like to tell you what it is.

The Court: Just give it to me.

Mr. Pettit: It is in parallel columns, extracts from the agreements themselves, so that if you are referring to Singer-Vigorelli or Singer-Gegauf or Singer-Messerschmitt, you may find the precise wording contained in the agreement—and it goes across, relating to the same subject matter.

The only thing that could be considered briefing at all is, oh, about ten words in the left extremity, the lefthand column, where we characterize what the provisions are—for instance, under License Provisions we put down what it is [fol. 617]—that may be deemed argumentative by Mr. Elkins (handing).

The Court: It is given as an aid to the court.

Give a copy to Mr. Elkins.

Mr. Pettit: Yes, sir.

The Court: Thank you very much.

Mr. Elkins: I understand, of course, that this is merely a chart and that it has no probative value and that it does not properly set forth the substance of the agreements here referred to. It does not.

Mr. Pettit: The agreements are in evidence.

The Court: It is submitted to me as a little memorandum or brief—that is all. It is not in evidence.

If I find that it is in accordance with the facts, I will accept it. It may save me some time. God knows you want me to do that, don't you?

Mr. Elkins: I beg your pardon, Judge?

The Court: I say——

Mr. Elkins: Yes, I would like to save you some time, Judge, but this does have inaccurate statements in it, and I do not think anything that presents an inaccuracy is really going to save your Honor any time.

The Court: You can point out later on in a little paper the inaccuracies.

[fol. 618] Mr. Pettit: Well, if there is an inaccuracy then somebody cannot compare it, because this has been compared word-for-word by people in the Singer organization. I do not know why it should not be correct.

The Court: All right.

Mr. Pettit: You will notice in the left column, "Singer-

Vigorelli license agreement" and it says that "Vigorelli will not bring any infringement action against Singer under the rights derived from patents now issued or to be issued in any country with respect to subject matter disclosed in U. S. patent No. 2,693,778 and in the U. S. patent applications by Johnson, Serial No. 471,766, and by Perla, Serial No. 386,684 and when embodied in sewing machines manufactured and sold by Singer, copies of which are at disposal for inspection by Vigorelli at the Office of Messrs. Barzano and Zanardo in Milan."

So that a license or a licensing of the making of machines under Singer's specified patents is shown here.

Vigorelli thereby agreed that no matter what patent he had, he would not enforce it with respect to the subject matter disclosed in the patent and the two applications mentioned, when that was embodied in sewing machines [fol. 619] manufactured and sold by Singer.

And the copies of the agreement, you will note, would be left with Vigorelli so that they could check whether we were going any place outside of this specific license granted.

> Singer in turn, it says "will not bring any infringement action against Vigorelli under the rights derived from patents now issued or to be issued in any country with respect to subject matter disclosed in Italian patent No. 497,557 and No. 507,862 and when embodied in sewing machines manufactured and sold by Vigorelli."

Which, your Honor, in substance says, "Go ahead and manufacture and sell your own machine, and as long as you are selling a machine that is embodied in your own plans and specifications and patents, we will not interfere with you; and you, Singer, will not interfere with us either with respect to the single-follower cam mechanism or with respect to the double-cam mechanism."

Vigorelli's two patents related to the two different types.

Now while we are in on this agreement, I will call attention to provisions about opposition and other provisions. [fol. 620] It is our contention, your Honor—and I think that it is very clear from the documents when you look at the Gegauf provisions, and you look at Mr. Stanford's

memorandum written at the same time—that these agreements all contained two different provisions. One of them relates to foreign countries in which opposition proceedings are available; the other looks to the United States where interference proceedings are available. And, quite naturally, actions in the one are quite different from actions in the other.

With respect to the foreign countries which have opposition proceedings, it provides:

> "Each of the two parties mutually agree not to institute any opposition, nullity or invalidation proceedings in any country against or otherwise to attack each others above-noted patents or patent applications and immediately to withdraw any such proceedings if it has already been instituted."

Now your Honor, you will remember that—and I may call a witness to prove this if necessary—in these foreign countries there are many proceedings available against patents.

[fol. 621] A patent can be obtained and exist for years, and anybody who feels aggrieved by it can go to court in a nullity proceeding and ask that it either be cut down or to declare that it should not interfere with the litigant's particular mechanism.

There is nothing that is final and conclusive in Italy, France, Brazil, or for that matter, in Germany or England. The provisions of the proceedings in the latter two vary to some extent, and the extent to which they can actually modify patents and reduce them is a little bit different in the former than in the other countries I mention.

You may know full well that in the United States when you attack a claim, it stands or falls in its entirety. You interpret it, but once the interpretation is made, the decision is, then: Is it valid or not valid?

If it is too broad, the whole claim falls.

That is not the situation in these other countries. These provisions were written with that in mind. They were intended to apply respectively to the actions in the different countries.

With respect to the United States, it says

> "provided, however, that if such two parties patents [fol. 622] and patent applications are or have become involved in a patent office priority-determining proceedings such as a United States interference or a Canadian conflict proceeding, then both parties will work together in order to settle such a proceeding in accordance with the laws and regulations of the patent office concerned and in the spirit of this agreement."

Now the Gegauf agreement, which I will come to later, even sets this forth more clearly than these other two do. There is a clear provision that interference proceedings shall be conducted "in accordance with the laws and regulations of the Patent Office concerned."

Mr. Weinstein has complained that in interference proceedings in the United States, the party has a right to challenge the claim that has been suggested for interference, to be limited, and ask that it be held non-patentable or invalid. That is correct. That happens to be provided, however, by the very rules and laws and regulations referred to in this contract. It is in accordance with those very laws and regulations that Singer and the contracting party are to proceed in an interference proceeding.

[fol. 623] There is not a line there that would keep Singer from objecting to a claim or seeking that it be limited—and there is every reason in the world why it would not want it to be so limited, because the last thing that Singer would want is a patent which is invalid. Its foes, when it has them, have strength enough to present contentions of invalidity.

This clause was put in here for the very purpose of making sure that every right under our law was reserved to the Singer Company.

Now whether it cared, whether it thought there was anything wrong and later made no objection, is beside the point.

Mr. Weinstein's argument is that the very restraint itself is illegal—and I say there was no such restraint. The application that he wanted us to be free to attack, the interference proposal, was one that the Singer patent department itself had drawn up, and obviously believed was proper or it would not put it in there.

There is not much surprise that Singer did not interpose an objection to the very claim it had drawn—and the claim in fact that it had drawn was considered so good that it was the claim picked in toto—every word, every period, every [fol. 624] comma—by the patent examiner to suggest for interference, covering the same subject matter in Gegauf and in Harris.

It is the same claim that the examiner was referring to when he also sent notices to Vigorelli and to Johnson, both of whom had gone out of the contest.

In Mr. Lightner's letter he continuously refers to some "mutual agreement"—some kind of agreement.

There is not a page in here where it refers back to any particular agreement. It just says—the whole spirit of this—that he was not looking for a particular—he was not suggesting something except that he wanted some kind of an agreement, and the one that he suggested before, and that he obviously had in mind, was the cross-licensing agreement that would let each operate in his respective field.

Government's Exhibit 5, a letter dated September 9, 1955, from the Patent Department, I presume, to Mr. Lightner, shows the matter with respect to which I spoke a minute ago—that Singer was opposing the patent application to the multi-cam arrangement filed by Brutsch & Company, and in fact it was all of the material used in that opposition that was enclosed in Mr. Lightner's letter—an opposition which [fol. 625] I might say, if I learned had been filed in the face of an offer by Brutsch to give us a license if we would just agree not to attack him—I would, at a minimum, raise an eyebrow as to what had happened in our patent department.

Government's Exhibit 8, a letter dated October 10, 1955 from Mr. Evans to Mr. Waterman, is only significant because it is the very first notice that Singer had of the possible existence of the Gegauf patents.

It gives no idea what they claimed or what they were about nor their contents. They just gave notice of the possibility in this October letter. It says:

> "It appears that the Bernina Company deposited a patent for a device involving a plurality of cams in a small number of countries."

Now what the patent said or what it did, Singer did not know.

I do not know whether there is some intimation from the government that upon learning of the possibility that Gegauf might be in this field, that we should have stopped the negotiations with Vigorelli. It seemed to me to be the implication. If so, I can only say it is incomprehensible. I know [fol. 626] of no reason why. Whatever we found out about Gegauf we should not have continued our negotiations with Vigorelli and closed the cross-licensing agreement which we wanted with them in order to free our machines from whatever patents he might have, regardless of whatever Gegauf might have.

Defendant's Exhibit 14, which is a cablegram to Mr. Waterman from Singer in Italy, shows the first knowledge that Singer obtained of Gegauf's filing date in Switzerland. It still had no knowledge of the contents of the claim.

Defendant's Exhibit 15 is significant only because it indicates to Singer that Vigorelli had filed an application in the United States. We had been working at this time without definite knowledge as to where they might have filed them, but only with knowledge that they would be ahead of us in the various foreign countries.

Then on the last page comes the first intimation of the places that Vigorelli had filed, which is "Italy, Spain, Argentine and other minor territories. It has been applied for but not yet granted in U. S. A., U. K., France, Brazil, etc."—and the "etc." covers additional filings by Vigorelli.

[fol. 627] Defendant's Exhibits 16, 17 and 18 continue to show no knowledge of the contents of the Gegauf claim. 16 shows that Singer had no knowledge of the Gegauf Italian patent claims, and that it was still making efforts to ascertain the nature of such claims.

Defendant's Exhibit 17, a letter from Evans to Waterman, dated October 24, 1955, shows that Singer at that time —or at least at the time this letter was received—received an Italian copy of the Gegauf patent. It shows that Singer had no idea of the Gegauf claims and the efforts made by Singer to obtain a copy of the Italian patent and the copy of such a patent in Italian was mailed in Italy on the date of this letter.

Defendant's Exhibit 18, dated October 25, 1955, a tele-

gram from the Patent Department to Snider—this again is to show Singer's efforts to obtain any information concerning any Gegauf application or patents in the United States.

Up to this time Singer had, for some reason or other, seemed not to be much worried about Gegauf in the United States, but it received back a cable sometime later—I believe in December.

Now in the meantime, on October 25th, it commenced another series of searches to see if there was anything that [fol. 628] it could learn that would enable it to break or void or invalidate any of these patents—this one instigated obviously by the continuing news of Gegauf.

On October 25, 1955, a letter was written to Mr. McKinnon, Singer's representative in Japan. This letter states:

> "We would like to invalidate several adversely-owned European patents each relating to zigzag stitch sewing machines and broadly claiming the idea of providing such a machine with a plurality of differently shaped rotary cams and means for selectivel connecting any one of the cams with the needle-bar, thereby to produce any one of a plurality of different patterns of ornamental stitches. These patents could be invalidated, or at least severely limited in scope, if we could locate one or more printed disclosures illustrating and describing such a machine, which disclosures were published in any country prior to May 31, 1952."

You will note, your Honor, that at this time it was the date "prior to May 31, 1952" which they by this time knew [fol. 629] was the filing date of the Gegauf patent in Switzerland.

A year before you will remember the date had been 1954, when they were thinking of Vigorelli.

This search obviously was started as a result of the news it now had as a result of Gegauf, although it really knew nothing except that there was an application relating to a multi-cam machine, and it had a date of May 31, 1952.

On page 2 of this letter, starting at the bottom of page 1, it says:

> "With the exception of Japanese patent application No. 13343 of 1953, you will note that each of these appli-

cations was filed in Japan prior to the critical date of May 31, 1952. However, none of these ten applications (which I may say parenthetically were referred to on page 1) was published until after this critical date. Thus, it would appear that these applications in and of themselves would not assist us in invalidating the subject European patents. However, it occurs to us that possibly the subject matter of one of these ten patent applications might have been given publicity in Japan [fol. 630] prior to the critical date of May 31, 1952. In other words, one of these Japanese machines may have been illustrated and described, prior to May 31, 1952, in Japan in a newspaper, trade publication, or advertising brochure, which publication would assist us materially in invalidating the subject European patents."

It goes on to say:

"However, since Singer wishes to manufacture and market machines of the type claimed in the subject European patents, you will realize the importance to us of being able to invalidate or severely limit the claims of these adversely-owned patents."

On page 3 it says:

"Even though such machines may have never been produced in quantity in Japan, it may be possible that one or two of such machines were made up and demonstrated at an industrial fair or at one of the Japanese universities. Such an exhibit might well have been covered by the newspapers and, furthermore, the machine may have been illustrated in printed brochures."

[fol. 631] Now, your Honor, we have a lot on this Japanese situation—and I am not going to try to read all of these letters from Mr. McKinnon to Mr. Stanford. I will say that a look at them or a reading of them will show that he did everything humanly possible to find any form of publication in Japan that would help invalidate this Gegauf application or any other application like it.

I might refer to Exhibit 22. He says:

> "No catalogs or specifications are available from MITI on San Shin zigzag machines produced prior to May 31, 1952."

Under No. 5, he says:

> "We are now searching through as many Japanese sewing machine publications as we can find dated prior to or around May 1952 to see if we can gain some information from them."

Under No. 6:

> "We are now checking at the Industrial Research Bureau of MITI to learn if they have any information or sample zigzag equipment."

Your Honor, he went to prior inventors; he went to prior examiners in the patent office in Japan, and he searched high and low.

[fol. 632] At the end, he indicated, in Defendant's Exhibit 24, where Mr. McKinnon was written:

> "From your letter it appears to be rather conclusive that no multi-cam ornamental zigzag stitch sewing machines were publicly introduced in the Japanese market prior to May 1952."

Again, below:

> "In any event, the information which you have developed for us to date has been most helpful, and we wish to thank you for your efforts on our behalf for we appreciate the amount of time and trouble that this investigation caused you."

It was revised only temporarily, and finally it was concluded with the advice that they were satisfied that nothing further could be done.

That is not the mark of someone who is seeking solely in terms of acquiring monopolistic position through patents; all that we have read so far shows Singer working and striving as a manufacturer of sewing machines—working to the

end that it could sell those machines and practically ready to give anyone a license to sell under Singer's patents if Singer obtained a corresponding right under interfering and con-
[fol. 633] flicting patents or even applications, whether or not we could establish by judicial proceeding the complete validity of each and every part of every claim of every patent.

Government's Exhibit 10 is a letter which I think it failed to comment on before. It commented on 10, on the writing on the back of it, but the letter itself has some significance when you get to the Gegauf situation—and they did not read that.

Mr. Wiegand, the German patent attorney, writes to confirm "the conference with Mr. Stanford and Mr. Kruger, on the 7th inst. I beg to report that I have discussed the matter in detail with the competent examiner for Class 52a" —which, by the way, is sewing machines.

> "In doing so it was found that the examiner did not know any better material than that known to us.
>
> "The Examiner was extremely pleased to get knowledge of the American patent No. 88,282. He also took a note of the Brtish patent 19 184 /1908 and the copy of the German patent 219187 which I submitted. The latter two patent copies were already known to the Examiner somehow."

[fol. 634] Now the Government might have been interested in whether the patents disclosed to the examiner by Mr. Wiegand included the Van Tuyl patent. They have never made any inquiries.

On the back of this letter there is a hand-written note by Mr. Stanford to Mr. Williams of Singer's patent department. This note says:

> "Vigorelli claims or states that Bernina has filed an application in the United States corresponding to their early-filed Italian patent. If this be so, maybe Harris Reissue should not be pushed too fast. Something to think about.

You will find later on why they did not want to push too fast. They wanted to deal with Gegauf, with knowledge in their possession which Gegauf would not have if our patents were not pushed too fast.

[fol. 635] The last paragraph reads, and this, too, is not noted by Mr. Elkins:

> "Fairweather tells me our British opposition against Vigorelli would have failed. Am glad we have agreement."

Fairweather, your Honor, is a partner in the firm of Singer's patent attorneys in England and Scotland. He said that the opposition in Britain, where Mr. Weinstein and Mr. Elkins think we acted so badly towards the British citizens when we did not engage in the opposition, would have failed.

Your Honor, that brings us to the agreement which we have already discussed. I will pass that one by and take up the correspondence immediately following.

Defendant's Exhibit 20, dated November 19, 1955, is a note to Mr. Vigorelli and says:

> "This is to inform you that, following the agreement signed on November 17th between the parties, we have today deposited in the offices of Messrs. Barzano & Zanardo, our patent agents, copies of the patent applications by Johnson and by Perla."

That was just a little touch showing the great conspira-[fol. 636] torial attitude that was held by us. That was, of course, so that Vigorelli could keep check on whether we were operating under his license and not in a way other than that specifically provided for.

On December 28, 1955, a letter was written to the Patent Department by Mr. Adamson. Mr. Elkins referred to this letter rather coyly. He just characterized it as dealing with one phase of the agreement. The letter does not say anything about being one phase. This letter sets forth what the Singer Patent Department thinks Singer has agreed to. It says:

> "As you know, on November 17, 1955, Singer and Vigorelli executed an agreement relating to multiple-cam ornamental stitch sewing machine. Briefly stated, under the terms of this agreement, Singer agreed not to bring any infringement action against Vigorelli in any country of the world with respect to Vigorelli-made zigzag stitch sewing machines of the type particularly

disclosed in the Vigorelli Italian patents No. 497,557 and 507,862. For its part, Vigorelli agreed not to bring any infringement actions in any country of the world [fol. 637] against Singer with respect to the Singer Class 282 and Class 319 machines as disclosed in the several Singer-owned patents and patent applications relating to these machines."

That is its description of the agreement it entered into, that is its concept of the substance of that agreement, and, your Honor, that, of course, is the agreement that was made and is the only significance of any part of the agreement that was made. Clauses which merely say "I won't attack or try to limit or fight your patent" are the most routine clauses to be put in patent license agreements. In fact, in this country I think it is pretty well established that without any agreement a licensee is foreclosed from challenging the patent so long as he is operating under the license.

The Court: I think you are a little in error there, Mr. Pettit, on the law when you made the comment that a licensee may not——

Mr. Pettit: Even without an agreement is not estopped? I submit to your Honor, I had thought that a licensee was not privileged to attack the patent he is operating under as long as he accepted and used the license.

[fol. 638] Government's Exhibit 14 dated December 23, 1955, shows the withdrawal of opposition in Brazil.

The Court: He, himself, cannot attack it because he could only attack its validity in a declaratory judgment suit, and there would be no dispute pending while he operated under his license.

Mr. Pettit: That is what I meant. While he is operating under the license he cannot turn around. If he gives up the license, he can do it.

The Court: That's right.

Mr. Pettit: But so long as he is operating under the license, he cannot.

The Court: There would be no dispute, no basis for a declaratory judgment suit. There would be no actual controversy. All right.

Mr. Pettit: He might try to create a controversy, but my

point is that he cannot do both. He cannot use his agreement and attack it at the same time.

The Court: Cannot do both, no, sir. You are right.

Mr. Pettit: Mr. Elkins refers to this, saying that it is an effectuation of the agreement not to oppose, and he recalls that the patent application was filed on very broad claims. My only comment is: so we said with respect to Brutsch.

[fol. 639] On December 10th Singer Italy wrote a letter to Mr. Waterman. This is Government's Exhibit 15. Mr. Elkins, as a result of questioning by the Court, admitted that there was no conspiracy at this stage. Yet at this time we already have an agreement with Vigorelli containing exactly the same type of clause that was later put in the Gegauf agreement. We made the agreement that he claims actually constitutes the heart of the conspiracy when we get to Gegauf. Certainly there was nothing conspiratorial when Vigorelli negotiated with Gegauf to get an agreement and when, in that negotiation, he brought great force on him, threatening him with patents, disclosing that he has many more applications than Gegauf, many other matters that he brought up in getting this license without cost. Yet he never once mentioned to him his agreement with Singer.

Obviously he couldn't be making an agreement with the knowledge of Gegauf for the purpose of forming this round robin that the government talks so much about if he never even mentioned Singer or mentioned its agreement, and I think it is perfectly clear that he did not.

[fol. 640] So we have at this time both the Singer-Vigorelli agreement, the Gegauf-Vigorelli agreement, Singer's clauses that are so much objected to, and not one single element of conspiracy, no mention in one single document of the Japanese, no mention in one single document of the possible purchase of the patent.

* * * * * * *

[fol. 641] Afternoon Session

Mr. Pettit: Your Honor, beginning with the Singer-Gegauf license agreement, I would like to have before you the chart which was shown in the pre-conference hearings,

showing the identity of Claim 1 of the Gegauf patent as it was ultimately issued and that of Claim 22 that was in the Harris Reissue application, put there by the Singer patent department.

Claim 22 happens to be the one that was ultimately allowed to Gegauf upon Gegauf's—well, really, upon the withdrawal of Singer, because Gegauf had the priority date when these claims were placed in interference.

I think the Government has a copy of it (handing to the Court).

I have given this to you because in coming to the agreement, you will find that the Harris agreement relates, so far as Singer is concerned——

The Court: May I ask a question?

We have the Gegauf patent in evidence. Have we the Harris application in evidence today?

Mr. Weinstein: Yes.

The Court: All right.

Mr. Weinstein: Harris Reissue.

[fol. 642] The Court: This is submitted as an aid to the court.

Mr. Pettit: As an aid to the court.

The Court: It is not an exhibit.

Mr. Pettit: You will see that every single element is just the same there—the same claim that was taken from 22 by the examiner and suggested in the interference—they are just identical.

The Court: Just two seconds, if you don't mind.

Well, it is almost identical wording.

Mr. Pettit: It is bound to be because it is the claim that was inserted in the Harris Reissue application by Singer, so it was Singer's claim. The examiner thought that was the best expression of the claim, on the common subject matter involved in Gegauf 1 and in Harris.

The Court: Did Singer copy this from the claim of the Gegauf patent?

Mr. Pettit: Just the reverse. Singer had the Harris Reissue patent and ultimately put this claim in the Harris Reissue application. That is the way it stood at the time the patent examiner suggested an interference—at least it is the second suggestion of interference. Mr. Weinstein com-

[fol. 643] mented that there had been an earlier claim 19 which the examiner suggested; he then withdrew this claim and it was inserted in the Harris Reissue application as an amendment, and this was taken by the examiner and used to suggest a claim to Gegauf, and Gegauf accepted that claim, and that from that moment on the interference involved that claim as a statement covering the common subject matter of the two applications.

[fol. 644] The Court: I see. All right.

Mr. Pettit: And when the claim was awarded to the Gegauf application, because of Gegauf's earlier priority date and because of Singer's withdrawal because of that, that, of course, came out of the Harris patent; it could no longer go in there, and all that was left in the Harris application to go into the Harris patent were the items that are set forth in item 29, page 16 of the statement of facts.

The Court: All right.

Mr. Pettit: And you will find on page 16, item 29, what is the Harris patent today. It is those three items.

The Court: 5, 6 and 7. I have them.

Mr. Pettit: Yes. They are set forth in substance in (a), (b) and (c) on page 16.

The Court: All right.

Mr. Pettit: So, when you are thinking of the Harris patent as it exists today, you think of these three claims.

The Court: All right.

Mr. Pettit: And these three claims are tied to the use of these mechanisms set forth in (a), (b) and (c) with the Gegauf No. 1 mechanism. I mean that is a very important [fol. 645] factor in this case, that there is no such thing as a violation of any one of these claims unless the machine using it also incorporates the Gegauf No. 1 claim disclosure.

The Court: All right.

Mr. Pettit: In other words, there cannot be a violation of (a), (b) or (c) alone. I mean, it isn't a question of construction or anything else. The patent calls for the use of this in conjunction with the 401 type of mechanism.

On January 19, 1956, a letter was written to Mr. Waterman by Mr. Stanford. This is Government's Exhibit 16.

The Court: Yes, I have it.

Mr. Pettit: Singer at this point became alarmed for the first time about the Gegauf situation in the United States. It

had been alarmed, as the letters that I read this morning show, and they had sought means of destroying any patent that might exist with respect to the following situation, but I think that a reading of these letters in sequence, although not just clearly set forth here, will lead to the conclusion that Singer for some reason or other really did not believe it was likely that Gegauf had an application filed in the [fol. 646] United States. It had warning. I don't contend that there was any justification for that. I say merely that it does come out of these documents that Singer was a little bit unaware of the danger in its home ground.

When this letter was written, it had just previously found that there had been an assignment in the Patent Office which indicated that Bernina had an application pending. He writes:

> "In view of the discussions in Italy and Germany, it was decided that Bernina's German utility model and Italian patent did not validly block Singer from manufacturing and selling the Class 319 machines in Germany and Italy. However, the Swiss Bernina patent application and possibly the corresponding German patent application may mature into patents containing claims which would be infringed respectively in Switzerland and Germany by our Class 319 and Class 282 machines.
>
> "Several weeks ago the U.S. Patent Office unofficially advised us that the claims of our U.S. Harris Reissue patent application are allowable over the known issued patents. These claims, if allowed, would read on both the Singer and Bernina machines. It follows that [fol. 647] such claims if contained in a Bernina U.S. patent application would also be allowable over the known issued patents."

The next paragraph continues:

> "We have been continually investigating the records of the U.S. Patent Office to locate any evidence that would indicate that Bernina has filed a patent application corresponding to its original Swiss application of May 31, 1952, and until last week had found nothing to

indicate that such an application had been filed. We now find that a Bernina patent asignment was recently recorded in the U.S. Patent Office and, as this assignment referred to an application executed on May 20, 1953, it could relate to a patent application corresponding to the above noted Bernina Swiss patent application. Unfortunately for us, the parent Swiss Berninia application was filed in Switzerland some nine days prior to the effective filing date in the United States of our Harris reissue application No. 516,058. From this, it is reasonable to presume that if this U.S. Bernina application in fact corresponds to the parent Swiss case, the [fol. 648] U.S. Patent Office will declare an interference between this application and our recently filed U.S. Harris reissue application No. 516,058 for the purpose of determining which of the two parties is entitled to the broad claim. Since any such U.S. Bernina application would be entitled to its corresponding Swiss priority date of May 31, 1952, which is nine days prior to the effective U.S. filing date of June 9, 1952 of the Harris reissue patent application, it would appear that Bernina might be entitled to the broad claims."

It then goes on to point out that an interference proceeding is a long, complicated affair that furnishes each party with an opportunity to attempt to block the ultimate allowance. It says:

"The outcome of such an interference cannot be predicted with certainty. In other words, assuming that Bernina has filed such an application in the United States, then our Harris reissue application is of value to us as a means for opposing the final allowance to Bernina of broad U.S. claims covering multiple-cam ornamental machines."

Then it says:

"If Bernina has filed such an application, we would [fol. 649] presume that the U.S. Patent Office would set up an interference with our Harris reissue application within the next four to eight weeks since, as above

stated, the Patent Office has already unofficially advised us that the claims in our Harris application are allowable over any known issued patents."

Your Honor, I want to call attention to the fact that they were contemplating an interference in four to eight weeks. It goes ahead:

"In view of this situation, we would strongly recommend that this Company attempt to work out with Bernina an agreement along the lines of the Vigorelli-Singer agreement. Our chances of negotiating such an agreement with Bernina would be greatly enhanced if we could approach them before any patent interference is declared. At the present time, we feel that we have more knowledge concerning this entire situation than does Bernina. Thus, up until the time that such an interference is declared Singer would be in the better bargaining position with Bernina, for after declaration of the interference Bernina would, as a matter of course, be given access by the Patent Office to our Harris re- [fol. 650] issue patent application and then would know that its application has an effective filing date nine days earlier than our Harris application."

And so, your Honor, here was a definite outline of the haste to approach Bernina and deal with them at a time when Singer knew that Bernina was ahead by nine days but Bernina could not know it because Bernina wouldn't know whether there had been a disclosure in the United States before the filing date of the Harris patent. It continues:

"... we are not as concerned over the other parties, as it is possible that Harris is senior to these parties. As for Bernina, we know that Bernina is the senior party by nine days."

Then it summarizes. It says:

"The present patent situation relative to multiple-cam machines is complicated due to that fact that shortly after World War II many sewing machine concerns developed various forms of this type of machine and then filed at substantially the same time patent appli-

cations directed to cover their various developments. Some of these applications were filed as early as 1952. In many of the principal manufacturing countries there [fol. 651] will be patent conflicts to determine which parties are entitled to the broadest patent protection."

And then finally it says:

"However, we hope to avoid the necessity of asking for such licenses and paying tribute under such patents by negotiating agreements with any such potential patent owners before the world-wide patent picture clears relative to multiple-cam machines. This we have already done with Vigorelli, and we suggest that the same approach be used with Bernina and any other party which appears as a potential owner of a dominating patent.

We believe that our position would be enhanced if we could negotiate an agreement of the Singer-Vigorelli type with Bernina. Presumably, the earlier we approach Bernina concerning this matter the greater would be our chances of success."

Now there is a document that shows an approach—and Mr. Elkins was looking for an approach—and that was to bargain with Bernina at a time when we had information that Bernina did not have, and would thus have that advantage over us in the negotiations to take place. [fol. 652] February 6, 1956, a letter was written to Mr. Baumann—this is Government's Exhibit 17. The government read portions at the bottom of page 1, and there appears the following sentence:

"It seems that during Dr. Lando's conversation with Mr. Vigorelli mention was made of the agreement Vigorelli has concluded with Bernina. This is stated to be along the same lines as that concluded between ourselves and Vigorelli last November."

Now as this is the beginning, I think, of the government's alleged conspiratorial charge, I would like to note particu-

larly what it is we are trying to get out of Vigorelli. This says:

> "We are very much interested to learn of the Bernina-Vigorelli agreement, as confidentially there is the possibility that we will want to meet at some time in the near future with Bernina representatives and discuss similar arrangements. I think, if Dr. Lando could use the excuse of passing on to Mr. Vigorelli the foregoing information concerning the Singer patent, about which he has inquired, as a reason to again visit Pavia and have an informal talk with him, at which time the information I have just given concerning the patent [fol. 653] could be passed on to him, there would be a good opportunity to very informally chat about the Bernina agreement."

The letter goes on to show that Singer wanted for its use to extract from Vigorelli information. It says:

> "We would very much like to know, of course, any further particulars that Mr. Vigorelli might pass out on such an occasion about the agreement with Bernina. We would like to know just how it came about that, after Bernina having pressed as they did for the sum of $160,000 (this figure was mentioned during the course of our visit last November), the ultimate settlement was for no monetary consideration but only on the basis of neither party interfering with the other with respect probably to certain specific patents. We would like to know details of the particular patents that Vigorelli had come across which caused Bernina to drop its demands for the large amount for settlement; the numbers, if possible; and, of course, the inventor and the country in which the patent or patents were taken out."

Now your Honor, that is no conspiratorial approach. [fol. 654] That is an approach by which our man is to go casually, engage in conversation with Vigorelli, get from him all the information they could for Singer's use in dealing with Gegauf.

Government's Exhibit 18 is a letter to Mr. Baumann, dated February 21, 1956.

This says:

> "The whole idea of going directly to Switzerland is predicated upon two factors. First, that we will have arrived in our minds at a logical and plausible reason, and sufficiently interesting too from the standpoint of the Bernina people, to visit them, and second, that we have been able to establish our contacts with the proper persons and to arrange for a meeting at the desired time."

Here again, your Honor, is an indication that Singer did not think the approach of just going in and saying, "You have us beaten by nine days. Will you be kind and gentle and give us a license?"

They wanted to figure out some basis on which they could offer something or use something that would be an inducement for him or a force for him to enter into an agreement with Singer.

> [fol. 655] "We can only make a decision upon the first premise when we hear from you and learn the results of your conversations with Mr. Vigorelli and, perhaps, have answers to some or all of the questions that we posed in our letter to you previously."

Defendant's Exhibit 27, a letter dated March 1, 1956, to Singer's representative, Winteler in Geneva, Switzerland; it is written for the purpose of seeing if arrangements could be made to meet with the Gegauf people. It says:

> "The present plan, as far as I can definitely determine, is to arrive in Genoa on April 9th and to stay over that night in Genoa and proceed at once on the morning of April 10th to Zurich."

Later it says:

> "As mentioned previously, there is the possibility that we will be wishing to talk with the top management of the Bernina Company, and we are interested to learn if you are acquainted with the persons who are in the responsible management positions. If so, we would appreciate learning their names, and if you have had any

dealings with them to learn what you may know about [fol. 656] them. Under no circumstances, however, do we wish you to pass any word to any persons in that company that we do have any intention of speaking with them about any matter, nor of speaking to any other persons who might appraise them of the possibility of meeting with them that I have mentioned.

So here was an indication, of course, that Singer had no acquaintanceship with the Bernina people, and as in the case of Vigorelli, had to seek out the people who could find the top personnel and make an approach to them. And we advised them not to advise anybody who might pass on the information—and that includes Vigorelli—and you will find the express purpose not to tell Vigorelli in a later letter.

Government's Exhibit 19, a letter of March 3, 1956, to Mr. Waterman from Singer, Italy. It encloses a report by Dr. Lando, who is giving a reply to Singer's request for information.

It says:

"With reference to the contents of Mr. M. L. Waterman's letter of February 6, 1956, I had a meeting with Mr. Vigorelli in Pavia on February 29th and I am setting out below a summary of the information during the [fol. 657] course of a long and friendly conversation."

Before I mention the information that he did succeed in getting, your Honor, I want to call attention to the final paragraph in this report, on page 3:

"I repeated what I had already mentioned at the start of the conversation namely that we were interested in discovering how Vigorelli had managed to reach an agreement with Bernina without the compensation originally requested.

Mr. Vigorelli's reply was interesting 'I was under the impression that Singer was collecting information for opposing the Gegauf-Bernina patent in U.S. and prevent the sale of their machine there'. On my expressing some doubt as to the correctness of his interpretation Mr. Vigorelli was unable to hide some disappointment."

Now that shows how much he knew about how the information was going to be used that was being extracted from him.

The information that was obtained—well, there was three difficulties with Gegauf's situation with Vigorelli.

One was that his patents might be too generic in their terms—the main feature being described in the patent [fol. 658] among the minor details—in fact, as one of the possible variations.

Another weakness that must have impressed him considerably was that while Bernina had filed in four countries, Vigorelli had filed in 17.

And the third one was an exhibition by Vigorelli of various patents which he waived in front of Gegauf, to tell him that his patent claims in the various countries might have some weaknesses in them.

Now all that information was obtained without Vigorelli even knowing why we were wanting them or how we were relying on them. That, your Honor, is not much of a conspiracy.

Defendant's Exhibit 28, a letter dated March 8, 1956, from Mr. Waterman to the Patent Department. This shows Mr. Stanford's idea as to how Waterman should write to Mr. Winteler—but you will remember that Mr. Winteler had already been written the letter that I read a few minutes ago—but this does show Mr. Stanford's thoughts on the matter that he passed on to Mr. Waterman, that he thought he write to Mr. Winteler.

"We feel", reading from the beginning of the second paragraph—

> "that Mr. M. C. Lightner's letter of August 16, 1955, [fol. 659] to Mr. W. P. Evans in relation to the Singer Vigorelli matter was especially good and we have altered Mr. Lightner's letter so as to make it appropriate in connection with the present Singer-Gegauf matter."

Your Honor may remember that the letter of August 16th was the one in which Mr. Lightner made crystal clear his concept of the type of agreement that Singer was searching

for—a cross-licensing agreement under which they each opened their territories to the other, for or under the patents involved.

He ends up:

> "In other words, it would appear to us that it would be advisable to handle the present Gegauf situation in substantially the same manner as the Singer-Vigorelli affair"—"in substantially the same manner as the Singer Vigorelli affair" which,

according to the government, had no element of conspiracy or unlawfulness in it.

Defendant's Exhibit 29 is a letter dated March 9, 1956, to Mr. Baumann, Italian Singer representative. This letter is quite significant in showing the relationship between Singer and Vigorelli. It says:

> [fol. 660] "Your letter of March 3rd, with the report of Dr. Lando's visit to Pavia, was greatly appreciated. There is no change at the moment in our plans to proceed directly to Switzerland from Genoa. We are undertaking to have the proper arrangements made in Switzerland so that we can meet with the proper persons of the Bernina Company, although this information should not be passed along to Mr. Vigorelli or any others other than yourself and Dr. Lando.".

Defendant's Exhibit 30, a cable dated April 13, 1956, says:

> "Yesterdays Steckborn Conference"——

referring, of course, to the conference with Gegauf, as this was the day before the execution of the cross-license agreement——

> "Not as Straight Forward as at Pavia Last Fall Due Quite Obviously to a Feeling of Assurance Their Situation Is the Superior One Also Suspicious Our Intentions This Feeling Apparently Became Dissipated by End of Our Sevenandhalf Hour Meeting Stop Next Conference Tomorrow Saturday Afternoon".

Your Honor, how could a conspiracy have existed at the [fol. 661] time, when the agreement was signed the following day? Up to that point there is not a single reference to a Japanese or a Japanese machine—and they meet the next day and sign the agreement, an agreement which, according to Singer, stated over and over again was a repetition of the Singer-Vigorelli agreement. That agreement was signed the next day.

If your Honor will look at the chart of the license agreements, you will find set up in the center column the provisions of this agreement that are relevant here.

So far as the license provisions are concerned, Gegauf

> "undertakes not to attack Singer, either directly or indirectly, in any country:
> on the basis of any of its above mentioned patents or patent applications"

Now Gegauf's "above mentioned patents or patent applications" consisted of the Swiss patent, the original Gegauf patent that had a filing date of the 31st of May, 1952, Gegauf's Italian patent, a German Gebrauchsmust registration, which I understand is in the nature of a petit patent that expires in a short time, its U.S.A. application No. 358,- [fol. 662] 377, and a German patent application No. G11,654.

So it says that Gegauf undertakes

> "not to attack Singer, either directly or indirectly, in any country, on the basis of any of its above mentioned patents".
>
> "Singer, on the other hand, undertakes not to attack Gegauf either directly or indirectly in any country, on the basis of any of its above mentioned patents or patent applications, and
>
> (b) for the present construction of the Bernina sewing machine as shown on the photograph attached to the present agreement and signed on the back by both parties."

So, in other words, Singer granted to Gegauf a concession that it would not attack Gegauf, under specific patents, namely, the Harris patent and its foreign corresponding

patents—and not another patent was mentioned; this relates to the Harris patent and the Harris patent only.

Gegauf got one further concession. You will notice this concession is only with respect to the Harris patent. He got one further concession, that with respect to the present construction of his machine, which was set forth in drawings [fol. 663] annexed to license agreement, he would not be attacked in any way. In other words, he was saying "I don't care what patents you have. The machine I am making and selling I want you to agree that you will not interfere with" —and other than that he got his license under the Harris patent application.

Now Singer also undertakes "not to manufacture or sell a construction which would be a slavish copy either of the present construction of the Bernina sewing machine—taken as a whole—which is shown on the attached photograph, or of the feeler and multiple cams mechanism the said Bernina construction includes."

Now Mr. Weinstein just mentioned that purely per se it violates, I gather, the whole agreement—I mean vitiates the whole agreement and is a most amazing suggestion. The Singer mechanism is shown by this Exhibit 106-B.

The Bernina mechanism is shown in this Exhibit 107.

You will see that while Singer gets a perfect right to use multiple cams with a single follower, all of the features, it can go into competition with it in every respect, it is limited that they won't make a slavish copy of this particular form [fol. 664] of mechanism—and to say that "Although you can use the principle, you can use the whole idea, you can go into competition with it freely, it is void because you cannot copy it detail for detail."

Singer quite obviously did not have much interest in doing it anyway.

I do not see how anybody who had this mechanism would be particularly interested in abandoning and using Bernina, but since Bernina was very proud of it, he thought it was a wonderful machine and Singer said "We will not make a slavish copy of this mechanism."

Then we come to the interferences. This is more clearly —even than the other agreements—provided in two separate portions.

[fol. 665] If you refer to the agreement itself, you would

see that there are two paragraphs appearing under a single number. The first paragraph obviously refers to opposition proceedings in these countries where you have a system of either opposition or the ability to bring nullity proceedings. It says:

> "Singer and Gegauf each undertakes not to do anything either directly or indirectly and in any country, the result of which might restrict the scope of the claims of the other party relating to the subject matter of the above-mentioned patents and patent applications."

When they are talking about restricting the scope, there is a regular procedure practically all over Europe for restricting the scope.

You go in and you say it is beyond what it should be, you get a declaration either that it is not valid or, if you are contesting it as being too broad because it contains something that you yourself have invented, you get a declaration that it is too broad and that you have the claim instead of the party that you are suing.

Those procedures are just commonplace and they can be [fol. 666] brought at any time. There is no time limit. The patent can sit there for years, and the first time that anyone is bothered by it, he goes in and brings his own personal nullity proceeding.

This agreement just says that Singer will keep out of the opposition, will let them have their patents in their countries provided that Singer gets the license.

On the other hand, the next paragraph deals with an entirely different situation. The first paragraph deals with non-action. That is a paragraph where you don't need to do anything; you just don't go in and oppose. You sit.

The next paragraph deals with places where you have affirmative action and it clearly segregates it. This paragraph says:

> "Singer and Gegauf each undertakes, in accordance with the laws and regulations of the Patent Office concerned, to facilitate the allowance in any country of claims as broad as possible as regards the subject matter of the patents and patent applications referred to above."

There is not a line in there that negates the right that is expressly given to each party to conduct the interference [fol. 667] in accordance with the laws and regulations of the Patent Office concerned. Mr. Weinstein is a great worrier, and his protest is that under those very laws people in interference have a right to try to limit the claim that was allowed. They can even turn and say that the claim they had themselves filed was invalid. We do not challenge that. We are perfectly aware that there are procedures and regulations established by the Patent Office in the United States under which interference proceedings are conducted and that that is one of the rules. And if you can find a line in there that negates their right to do it in accordance with the laws of the country and the Patent Office involved, I don't know where it is, nor do I know what the purpose of putting that clause in there is if it wasn't for that very reason.

Your Honor, there is a perfectly good reason for that. Singer wouldn't want a patent in the United States that was invalid. It drew these claims in the most artful way that it could possibly draw them after very lengthy study of all the facts. It drew an application that it knew was valid. It [fol. 668] drew an application and, even though the Patent Office requested that they change it, they changed it to expedite it and not because they thought there was anything wrong with the previous claim, Claim No. 19.

According to the Government itself, Singer was planning at that very moment to bring proceedings against the Japanese, including the biggest Japanese manufacturer in Japan. Why in the world would Singer want to get a patent or even ask for the right to get a patent or accept a patent that it did not have confidence was valid? It is to spend thousands and thousands of dollars to enforce it. It is to meet the biggest, the wealthiest of all the opponents in the world. Yet they tell us that we wanted an invalid patent in order to go forth and do battle with Brother and the other Japanese importers.

To show how utterly silly and fantastic that is, I would like to read some letters having to do with the actions brought in the United States with reference to these machines.

There is a letter, Defendant's Exhibit 43, dated September 17, 1958, from Mr. Stanford to Mr. Waterman. It refers

to the action brought by Singer against the Sewing Machine Exchange. He says:

[fol. 669] "Enclosed is a copy of a Complaint which was filed on September 10, 1958.

"This Complaint was filed against Sewing Machine Exchange, a retail sewing machine store in Anderson, South Carolina. The suit was filed with respect to a Universal zigzag stitch sewing machine which was purchased on June 23, 1958."

That, by the way is a machine that, by the stipulation of facts, infringes Gegauf No. 1. It is stipulated that no action has been brought by the company except with respect to a machine which did not violate Gegauf No. 1. The letter continues:

"This Universal machine is manufactured in Japan by Sanshin and imported into and distributed throughout the United States by Standard Sewing Equipment Corp. of New York. As you know, this machine infringes our Gegauf patent No. 2,832,302 and our Harris reissue No. Re. 24,370."

Now the letter continues:

"We have been advised that the proprietors of the Sewing Machine Exchange are not interested in defending this suit and are willing to enter a consent decree. However, since we are primarily interested in having [fol. 670] Standard Sewing Equipment Corp., the importers and distributors of the offending Universal machine, defend this suit we are endeavoring at the present time to encourage the attorneys for the Sewing Machine Exchange to contact Standard Sewing Equipment Corp. with a request that the latter party take over the defense of the suit."

The letter dated December 10, 1958, again from Mr. Stanford to Mr. Waterman, Defendant's Exhibit 44, refers to the action brought against Alco Appliance Distributing Company. It says:

"In our letter to you of September 17, 1958 we advised that a Complaint had been filed in the name of

The Singer Manufacturing Company against Sewing Machine Exchange, a retail store located in Anderson, South Carolina. This Complaint was filed with respect to a Japanese-made Sanshin machine sold by Sewing Machine Exchange under the trademark Universal. These Universal machines were imported into and distributed throughout the United States by Standard [fol. 671] Sewing Equipment Corp. of New York. As you know, our Complaint involved a patent infringement action alleging that the Universal machine infringes our Gegauf patent 2,832,302 and our Harris reissue patent No. Re. 24,370.

"Unfortunately, neither Sewing Machine Exchange nor Standard Sewing Equipment Corp. would defend this suit and as a consequence we accepted from Sewing Machine Exchange a consent decree of which a copy is inclosed. You will note that by way of this consent decree the defendant admitted the infringement and the validity of the several Singer patents."

Now comes the important paragraph:

"Since we were unable to come to trial with respect to the Sewing Machine Exchange suit, we filed on December 2, 1958 a second Complaint in South Carolina based upon the above-noted Gegauf and Harris patents. This second Complaint was brought against Alco Appliance Distributing Company, a retail store located in Columbia, South Carolina. This Complaint was filed with respect to a Japanese-made Sahnsin machine sold by Alco under the trademark Fleetwood which machine [fol. 672] was imported into and distributed throughout the United States by Fleetwood Industries, Inc. of New York, formerly S.K.S. Machine Company. We hope that either Alco or its supplier Fleetwood Industries, Inc. will defend the present infringement suit."

In Defendant's Exhibit 45, the Patent Department Report for the year 1958, it is stated on page 2 at the top of the page:

"For the purpose of obtaining an early adjudication of our Gegauf patent a second civil suit was filed in September, 1958 in the District Court for the Western

District of South Carolina against Sewing Machine Exchange, a retail dealer selling infringing Japanese-made machines in Anderson, South Carolina. Sewing Machine Exchange did not defend the suit and as Standard Sewing Equipment Corporation of New York, the importer and distributor of these machines, refused to protect its customer against our charge, Singer had to be content with a consent decree."

[fol. 672a] In the next paragraph it states:

"Following this consent decree we filed a second suit in South Carolina in December 1958 against Aco Appliance Distributing Company, a retail distributor of infringing Japanese-made machines in Columbia, South Carolina."

[fol. 673] These were not all the suits brought. A suit was brought against Brother, the biggest of them all, here in New York. That suit, of course, is in a jurisdiction which takes a long time to reach trial, particularly when there is a defendant who does not want to go to trial, and in fact it was due to that situation that these actions were brought in South Carolina in the hope that the company could get someone to come in to defend the litigation and get a quick decision on the merits.

There was no hope of that in New York. Brother took every advantage of delay possible, including a motion to stay the trial of the action until after the determination of this action, and by that motion it delayed the proceedings first by the fact that the judge's decision was not rendered for some six months, after which it took 60 to 90 days in order to ultimately comply, and that half-heartedly, with interrogatories that were asked.

And so, instead of being anxious to come forward with its money which it uses freely in the defense of other cases, your Honor, it has done everything it could to avoid the trial of the issue in this case.

[fol. 674] Mr. Elkins: I am sorry, your Honor. It seems to be testimony that is outside the documents under discussion.

The Court: Yes.

Mr. Pettit: They are motion papers, they are decisions,

and I will be glad to put them in the record, your Honor. Mr. Elkins has the answer of that very complaint in this evidence.

Mr. Elkins: They are talking about the money that was spent and so forth.

The Court: I suppose Brother did pay some American attorneys to take care of their interests. They received their money's worth.

Mr. Pettit: I am sure they did.

The Court: But we won't go into that. It has nothing to do with this case.

Mr. Pettit: I only want to show their delay and their not being willing to meet the issue.

The Court: Strictly speaking, they are not a party to this suit.

Mr. Pettit: That is correct. But the government has made the contention, the utterly silly contention, that we went to the Tariff Commission proceeding so that we would not have to meet the issue of validity. In the face of these three [fol. 675] actions and every effort that we could make to get a contest, every one of which they have read in full, they make the statement that the Tariff Commission proceeding was brought because Singer knew that validity of the patent would not be an issue.

The allegation, the statement is preposterous and cannot possibly be made in good faith. Singer has shown that it did everything it could to bring these people to trial and they have run from it as long as they could.

The Court: This would be a psychological point to take a five-minute recess.

(Recess taken)

Mr. Pettit: Now, your Honor, I go back to the agreement and say again that Singer was not seeking the benefit of any provision that would let it get an invalid patent. It has its patent office, it works on these year in and year out, and there is nothing that is more certain than that it is a mere trap to get a patent that won't stand up.

On the day before this meeting there was one further document, and that is the memorandum to Mr. Lightner prepared by Mr. Waterman. It is dated April 13, 1956. It [fol. 676] is significant because it contains the very first

mention of Japanese machines. I read the cable of the same day and remarked that up to that time there had been no reference to the Japanese or to purchases.

Now, in this next document there is one reference and the first and only reference prior to the execution of the Gegauf-Singer cross-license agreement. In the third paragraph it says, and I would like for you to notice the first words:

> "Gegauf's biggest fear is of Japanese machines coming into the United States to be sold at a lower price than his machines would be because of their low priced labor."

This, your Honor, is rather natural talk from a man who is aware of what the principal competitor in the world is doing. He had a fear, no doubt. Mr. Waterman goes on:

> "*I think his fears are well founded, and we did not* do anything to cause them to be other than along the line that he was thinking because one of the strong points of our argument for the agreement between our two companies is in order to fight this Japanese competition in their building of a machine that in any way [fol. 677] reads on the patents"——

and I think it is apparent that it means patent applications——

> "of ourselves and Bernina which are in conflict."

Now here is a plain reference to the argument that most obviously underlined it, that they would be better off not fighting each other, going ahead and getting a license and having their respective licenses in the various countries wherever they might turn out so that each could proceed his way in enforcing respective patents. I think there is no other significance that can be attributed to it. There is no mention of purchase between them, and that is the only reference that is made to Japanese at any time prior to the execution of the cross-license agreement.

Your Honor, the final document in this series is Defendant's Exhibit 31, a memorandum dictated by Mr. Stanford on April 15th, while he was still in Zurich, immediately fol-

lowing the execution of the license on April 14th. As we stated in our statement of purposes, this letter is significant.

"To show that:

"(1) Stanford, on arrival in Zurich, obtained from the Patent Office and studied with Kirker the Swiss [fol. 678] Gegauf patent, which he had not theretofore seen, and found that the principal claim read directly on the Singer 401 machine; Stanford ascertained that Gegauf had acknowledged all references which Stanford, without having seen such claims, thought might be used to destroy most of the claims of the patent; Kirker advised that such claim reading upon the 401 machine would stand up in the Swiss courts and that he was of the opinion that it was highly desirable for Singer to enter into an agreement with Gegauf concerning the conflicting patents and patent applications relating to the multiple-cam mechanism.

(2) Stanford concluded that Gegauf

(a) had a patent which would cover the 401 machine in Switzerland,

(b) had a German patent application, which in all probability would contain a claim which would dominate the 401 machine,

(c) had an Italian patent which might or might not be valid, and

(d) had an application pending in the United States, with a filing date 9 days prior to that of the Harris patent, which would dominate both the 401 and the 319 [fol. 679] machines in the United States.

(3) The Singer-Gegauf cross-license agreement referred to and was intended to cover and relate only to the patents specified in the preamble thereof, namely, the Harris U.S. patent and its corresponding foreign patents and patent applications, and the Gegauf Swiss patent and its corresponding foreign patents and patent applications.

"4) (a) The first sentence of Paragraph 1 of said agreement"—that is the one that I read, your Honor——

"related solely to opposition and invalidation proceedings and applied only to Germany, Sweden and Japan.

(b) The second sentence of the first paragraph of the agreement related to interference proceedings, and applied only to the United States and called for the conduct of interference proceedings in accordance with the laws and regulations of the United States Patent Office.

(5) (a) The second paragraph of said agreement, which, together with Paragraph 3, Singer considered by far the most important, provided that Singer would not attack any Gegauf machine on the basis of the Harris [fol. 680] patent or any corresponding foreign patent and would not on any basis attack the Gegauf machine then being constructed by Gegauf.

(b) Paragraph 3 provided that Gegauf would not attack any Singer machine on the basis of the Gegauf Swiss patent or any corresponding Italian or German patent or on the basis of Gegauf's United States patent application.

(6) The sole purpose and ultimate effect of the Singer-Gegauf cross-license agreement was to enable Singer to sell its 401 and 319 machines in the United States, Switzerland, Italy and Germany free from any liability for infringing the specified Gegauf patents and to enable Gegauf to sell his machine in all foreign countries where Singer had Harris patents or corresponding Harris patent applications free from any liability for infringing such Harris patents and patent applications."

[fol. 681] At the bottom of page 2 of that memorandum there is the statement that:

"Singer and Gegauf each undertakes not to do anything, either directly or indirectly and in any country, the result of which might restrict the scope of the claims of the other party. The obvious intent of this is to avoid opposition proceedings. In other words, Singer will not oppose the application of Gegauf and Gegauf will not oppose the application of Singer. The only

countries in which this clause or paragraph has any direct bearing is in Germany and Sweden."

Parenthetically I will state that I think he inadvertently left out Japan.

"In short, we will not oppose Gegauf's German patent application and they will not oppose any applications which we may have pending which relate to the multiple-cam type machine."

The next paragraph says:

"The last part of Paragraph 1 says that Singer and Gegauf each undertakes, in accordance with the rules and regulations of the Patent Office concerned, to facili-
[fol. 682] tate the subject matter of the patents and patent applications in which the agreement was drawn. The only place this would be of any importance is in the United States, and the sum and substance of it is that whichever party is entitled to the claim in accordance with the rules and regulations of the United States Patent Office will receive the claim. It appears to me that Gegauf has filed first, and we know as a matter of fact that Harris could not push his date back of his filing date then Gegauf would be entitled to the claim which has been suggested to them or which will be suggested to them when the interference is actually declared."

* * * * * * *

[fol. 683] Mr. Pettit: Instead of Mr. Wesely proceeding now, I will, instead, offer some exhibits.

I would like to introduce one sewing machine that I left out this morning. That is the Singer 403 replaceable cam machine.

Mr. Elkins: We object, your Honor, to the introduction of the replaceable cam machine. It is not within the part of commerce to which this case is directed.

[fol. 684] The Court: It isn't, but it may throw light on it. I don't know. We are dealing here with a mechanical patent, and this may throw light on it.

Mr. Pettit: Of course, your Honor, we claim that it is squarely within——

The Court: We will see. I don't know whether it is or not. I am going to take it. What relevance it has I will determine on all of the record.

We will mark this in evidence. This is the 403?

Mr. Pettit: That is the Singer 403 with the single replaceable cam.

The Court: What number is this marked?

(Received in evidence as Defendant's Exhibit 116.)

Mr. Pettit: And I would like to introduce in evidence the chart of this machine, the interior of this machine, showing in color the zigzag mechanism.

(Received in evidence as Defendant's Exhibit 116A.)

Mr. Pettit: And finally the zigzag mechanism mounted on a board that is contained in the 403 machine.

(Received in evidence as Defendant's Exhibit 116B.)

[fol. 685] The Court: This has only one cam?

Mr. Pettit: That's right, your Honor.

The Court: And that can be taken out and replaced?

Mr. Elkins: Your Honor, I would like to have the record show, seriously, that as the cam was taken out by an expert, Mr. Williams, it flew with a dangerous speed towards——

The Court: Close to the proximity of the judge's proboscis.

All right. Now let's see. This is a replaceable cam and that sets in there like that. I see. You just get that on one of those little gadgets. All right.

Do you see how this is done, Mr. Elkins? Like that. Do you see? I had no difficulty putting it in.

Now I will take it out. And it did not slip out of my hands. Perhaps I am more skillful than the expert.

This is the small model.

Mr. Pettit: That is the mechanism itself and it shows how the information from the cam is transmitted in exactly the same way as in the 401 machine.

[fol. 685a] The Court: This embodies what patents? Is this the Perla patent?

Mr. Pettit: No, your Honor. That is an entirely different patent. I do not believe that the patent covering that is mentioned in the statement of facts or otherwise.

[fol. 686] The Court: Anyway, it is a single replaceable cam machine, manually replaceable.

Mr. Pettit: That is right, and with the stationary cams that are part of the Johnson invention which are used to fix the needle position, the position of the needle, the needle can sew from any one of three positions, either center or on either side, and by using any one of these cams you determine which position the needle will operate from.

And that one is the same. Instead of cams, it appears at the base of the stack of cams in the 401 machine.

The machine whi[illegible] I am now about to offer in evidence is mentioned in paragraph 23 of the statement of facts. This is the Vigorelli machine that is made under Vigorelli's second Italian patent. You will remember it had two Italian patents. The first patent covered the machine that had a stack of cams and a single follower. This is made under a patent that deals with the taking of information from more than one cam at the same time. In that respect it is similar to the mechanism covered by the Johnson patent.

The Court: All right. We will mark it in evidence.

[fol. 687] Mr. Pettit: This is the Vigorelli.

(Received in evidence as Defendant's Exhibit 117.)

Mr. Pettit: This is the Vigorelli multi-cam machine, the machine carried multi-cam machine.

The Court: This is the modified form.

Mr. Pettit: This is the modified form that has a mechanism which permits the taking of information from more than one cam at the same time, and that is one of the machines and one of the patents that came squarely in conflict with Vigorelli.

The Court: Will you just repeat? I heard you, but I did not get the significance of what you said.

Mr. Pettit: When we were negotiating with Vigorelli, this machine and the earlier machine were both involved in our negotiations. This very machine, the one taking the information from two cams, had a priority date later than Johnson's but the earlier patent dealing with the single set of cams and a single follower had a priority date ahead of Johnson, and it raised very complicated situations of where Singer would be ahead in the United States but Vigorelli would be [fols. 688-689] ahead——

The Court: Was Vigorelli marketing these two machines,

the original form and the modified form shown by this exhibit, at the time that you entered into your agreement with them?

Mr. Pettit: Yes, yes.

The Court: He was.

Mr. Pettit: I think that appears in the statement of facts.

The Court: I think it does, too, but I want to be sure. We have marked this Vigorelli modified form as Defendant's Exhibit 117.

• • • • • • •

[fol. 690] Mr. Elkins: Were any other United States patents filed by Vigorelli other than the one referred to in [fol. 691] these mechanisms?

Mr. Pettit: Not to my knowledge.

Mr. Elkins: At any rate, it is not in the statement.

Mr. Pettit: Do you know of any?

Is this a one-way answer? I am asking you. Do you know of any?

Mr. Elkins: I know of none.

• • • • • • •

[fol. 692] UNITED STATES OF AMERICA

vs.

THE SINGER MANUFACTURING CO.

New York, May 11, 1961, 10.30 o'clock a.m.

(Trial resumed)

DISCUSSION OF SIGNIFICANCE OF EXHIBITS BY MR. WESELY:

Mr. Wesely: Good morning, your Honor.

May it please the court, we turn now to documents on negotiations which resulted in the Singer-Messerschmitt cross-licensing agreement. These negotiations, which extended from May of 1956 to April, 1957, related to the patent affecting the Singer 319 machine. Since 1956 Singer has manufactured and sold the 319 machine in Europe in sub-

stantial quantity, and there it is Singer's top-of-the-line machine.

Early in 1956 Singer learned that its Perla patent application, covering the concept of multiple cams each with its own follower, the concept embodied in the 319 machine, would be beaten in Europe by Messerschmitt because the filing date of Messerschmitt's patent application preceded Perla's by fourteen days. In the United States, however, Singer could rely on the fact that Perla had conceived his invention prior to the Messerschmitt filing date and would, therefore, [fol. 693] be entitled to the patent.

Singer's solution to the problem is found in capsule form in Defendant's Exhibit 87 in evidence, a letter dated July 10, 1956. In the second paragraph on page 2, Mr. Stanford, in advising Mr. Waterman, says that Perla would be entitled to the patent in the United States but that the reverse situation would obtain in Europe because of Messerschmitt's earlier filing of its application. Mr. Stanford goes on:

> "It is for this reason that it would be to our best interest to enter into an agreement with Messerschmitt."

That is it. Singer was entitled to the patent in the United States; Messerschmitt was entitled to patents covering the same subject matter in Europe, where Singer planned to sell substantial quantities of the 319 machine. To be free of Messerschmitt's claims in Europe, Singer entered upon negotiations with Messerschmitt and ultimately obtained the cross-license agreement.

Your Honor, the stipulated statement of facts, Court's Exhibit 1, sets forth some important matters which are not disclosed by the documents in evidence. For example, paragraph 19, sets forth that on April 1, 1954, Martin R. Perla, [fol. 693a] a Singer employee, was directed to design and develop an improved Class 306 machine which would incorporate a multiple-cam arrangement in lieu of the replaceable cam of the 306 machine.

[fol. 694] By May 10, 1954, Perla had completed his design with a plurality of cams, each with its own follower. This design was incorporated in the 319 machine. Tools for the production and assembly of the 319 machine could be prepared in a short period of time with little expense because it was of substantially similar construction to that of the 306

machine, except insofar as the cam mechanisms differed. Production of the 319 was ordered commenced to place these machines on the market as soon as possible.

In paragraph 42 of the statement of facts, your Honor, on or about July 15, 1955, Singer received a leaflet which described a Messerschmitt machine like the Singer 319 machine; that is, it had a plurality of cams each with its own follower.

The receipt of this leaflet was a matter of serious concern for Singer, because at this very time the 319 was being readied for distribution throughout the world, and as Mr. Stanford rightfully assumed and advised Waterman on July 19, 1955, Messerschmitt had probably filed a patent application covering this machine prior to the end of 1954. Singer's Perla application bore a filing date of December 8, 1954.

[fol. 695] Obviously there was substantial doubt as to whether Singer or Messerschmitt would have the dominant patent affecting the 319 in the various countries where it was manufactured and sold.

Turning to Exhibit 78 in evidence, your Honor, during a trip to Europe in the fall of 1959, Mr. Waterman and Mr. Stanford tried in every way to get a look at the Messerschmitt machine but found that Messerschmitt had not yet distributed its machine for sale.

When in Germany, Mr. Stanford discussed the situation with Mr. Wiegand, Singer's German lawyer, after which Dr. Wiegand wrote to Singer, Germany, that after having a discussion with the patent examiner in the German Patent Office, he believed that the situation was more complicated than Stanford's patent searches indicated.

That document, your Honor, is Plaintiff's Exhibit 10 in evidence.

In Plaintiff's Exhibit 13, on December 28, 1955, Mr. Stanford advised Singer, Germany, that the Singer Patent Department would continue to watch very carefully the patents and patent applications as they were published in the various countries of the world—aware of the complicated patent [fol. 696] situation, and that Messerschmitt might have a filing date earlier than the Perla filing date.

On January 19, 1956, Plaintiff's Exhibit 69 in evidence, Stanford advised Singer, Germany, that he was making

every effort to stay on top of the German patent situation and would welcome any suggestions Wiegand might have as to how Singer could better protect itself or improve its position.

As appears from paragraph 45 of the Statement of Facts, your Honor, and Plaintiff's Exhibit 70 in evidence, by March 15, 1956, Singer was stirred to a sense of urgency by receipt of a communication from a German patent examiner that it seems the German Perla application was being held in abeyance because of the prior filing of a German application. Singer believed that such prior filing had been made by Messerschmitt and asked that Wiegand obtain any and all information concerning the possible filing by Messerschmitt of patent applications covering sewing machines having multiple cams, any one of which might be selected to control the vibration of the needle-bar, and he suggested that there might be information available in the Belgian Patent Office. [fol. 697] As is set forth in paragraph 46 of the Statement of Facts, the stipulated statement of facts, on March 19, 1956, Singer requested that a conference be arranged with the responsible management of the Messerschmitt organization to discuss measures that might be taken to avoid conflicts between patent applications respecting the multi-cam machines, and such a conference was arranged for May 3, 1956.

Some time in the days immediately prior to April 30, 1956, Mr. Stanford, who was then in Brussels, combed the records of the Belgian Patent Office and found the Messerschmitt application, indicating that Messerschmitt had filed in Germany on November 25, 1954.

This is clear from Plaintiff's Exhibit 68 in evidence, and also from paragraph 47 of the stipulated facts.

With the discovery of the Messerschmitt Belgian patent, Singer realized that Messerschmitt's patents might issue in many of the principal foreign countries with claims which would dominate the 319. Mr. Stanford remarked "At least we appear to be ahead in the United States".

Plaintiff's Exhibit 28 in evidence, your Honor, is a letter from Mr. Stanford written to two members of his staff, [fol. 698] dated April 30, 1956.

In that letter Mr. Stanford commented on the fact that

Singer had been "Topped again by a few days"—and he said "sho is hell".

He added that at least it seems Singer was ahead of Messerschmitt in the United States, and the situation "Could be worse".

After the conference on May 2nd with representatives of Messerschmitt, Mr. Stanford added a postscript to his letter of April 30, 1956, Plaintiff's Exhibit 28 in evidence, stating that he had met with Messerschmitt and Messerschmitt had been tough to deal with.

Mr. Stanford said he thought the United States Perla application should be pushed very hard. He knew that Singer was ahead of Messerschmitt in the United States and would be granted a dominant patent here, and he wanted this established as soon as possible so that he could use it in bargaining with Messerschmitt, and to free the 319 throughout the world by cross-licenses with Messerschmitt.

In Plaintiff's Exhibit 71, a letter written from Karlsruhe, from Stanford to Mr. Williams, written on the morning of Friday, May 4, 1956, Mr. Stanford sets that he has given [fol. 699] the Messerschmitt situation much thought, and again urges that the United States Perla patent be pushed to the limit.

Obviously irritated by the tough bargaining session he had just been through with Messerschmitt, Mr. Stanford set forth his impression that Messerschmitt would negotiate only when they had "a gun in their back." And he turned his thoughts to the weapons that he had available for negotiation. The most important was to precipitate the interference proceeding in the United States between the Perla and Messerschmitt application, in which Perla would prevail.

The second was to use the fact that Messerschmitt was infringing the German counterpart of the United States Tiesler patent.

In Defendant's Exhibit 79, your Honor, a handwritten letter of May 9, 1956, Mr. Stanford writing from London to his colleagues in the Patent Department, evidences a greater concern over Messerschmitt's strength, having learned that Messerschmitt apparently had filed in many countries, and he discloses further that the president of Singer, with whom he had discussed the situation, was even more concerned.

On May 22, 1956, Defendant's Exhibit 80 in evidence, Mr. [fol. 700] Stanford first cabled and then wrote to Singer Italy, that inasmuch as Singer was preparing to manufacture the 319 machine in Italy, it was important to determine whether that machine infringed any of the claims of the Messerschmitt Italian patent.

This letter shows that Singer believed there was danger that its 319 machine would infringe the Messerschmitt Italian patent, and that several of the claims of that patent could be interpreted to cover the 319 machine.

The letter makes clear that Singer knew of no prior art which would function in Italy fully to anticipate certain of the claims of the Messerschmitt Italian patent.

Mr. Stanford asked that an opinion be obtained as soon as possible from Singer's Italian patent attorneys, as to whether the 319 machine would infringe the Italian patent of Messerschmitt.

The reply—there are two, your Honor, the replies to Mr. Stanford's letter were from Italian counsel, Barzano & Zanardo—are Defendant's Exhibits 82 and 84 in evidence.

First, Defendant's Exhibit 82 was in reply to a cable sent by Mr. Stanford.

[fol. 701] The second, Defendant's Exhibit 84 in evidence, is in response to a letter of May 22, 1956, which is Defendant's Exhibit 80 in evidence.

Your Honor, it was the opinion of Singer's Italian patent counsel that Singer's 319 machine infringed the Messerschmitt Italian patent as issued, inasmuch as under Italian law the claims of a patent do not limit the patent, and that the Messerschmitt Italian patent disclosed the idea of multiple cams, each with its own follower.

Italian counsel advised further that there was a good chance that the Italian courts would hold that the Messerschmitt Italian patent was anticipated by the prior art, that is, Gegauf, Vigorelli and Harris, but that this was an issue involving some risks to Singer—"some risks" is a quotation from the opinion letter of Messrs. Barzano & Zanardo.

It is plain that this opinion could be of little consolation to Singer which had and still has a plant in Italy in which the 319 would be manufactured and distributed, not only throughout Italy but exported throughout Europe.

The advice of Singer's Italian patent counsel that there

were some risks that the 319 would infringe the Italian [fol. 702] patent plainly demonstrated the need to be free of that patent.

Not only were there some risks but the consequences to Singer could be extremely serious.

This is evidenced by Plaintiff's Exhibit 75 in evidence, your Honor.

Plaintiff's Exhibit 75 in evidence is a letter of Singer in Italy transmitting a report of Italian patent counsel to Singer's Patent Department.

Singer Italy commented that the consequences of losing any patent battle with Messerschmitt in Italy, and I quote from this letter: "would certainly be much heavier for" Singer than for Messerschmitt, and that it anticipated that Messerschmitt would undertake legal proceedings to protect its Italian patent.

At this time, your Honor, as set forth in the stipulated statement of facts, Singer was tooling and otherwise preparing to manufacture the 319 in its Italian plant in Milan and it would be liable for royalties to Messerschmitt for each machine manufactured there, even machines exported to and sold in countries where Messerschmitt would not have a patent.

[fol. 703] Turning just briefly to Plaintiff's Exhibit 87 in evidence, to which I will return, your Honor, Mr. Waterman wrote that Singer would "make one hundred or even more" of its 319 machines for every one of Messerschmitt's.

In Plaintiff's Exhibit 75, Singer-Italy asked "whether or not it would be advisable to include Messerschmitt amongst the signers of the non-aggression pact." There is a plain meaning to this statement. Singer had a non-aggression pact with Vigorelli. Singer had a non-aggression pact in substantially the same terms with Gegauf, signed some five months later, which made two signers of such pacts. Non-aggression, of course, means no war, and the parties to the respective licenses had agreed not to make war. Here, in Plaintiff's Exhibit 75, Dr. Lando of Singer-Italy obviously is inquiring as to the advisability of having the same form of agreement with Messerschmitt.

There is another aspect of this letter, your Honor. Here is a statement written by an Italian, dictating in a foreign language to a secretary dealing in a foreign language. The

"the" of the non-aggression pact could easily be "a" non-[fol. 704] aggression pact. The fact is that these were separate agreements, and by the use of a single word the government would turn these separate agreements into one.

On May 25, 1956 Messerschmitt's patent lawyer Busselmeier examined the Singer 319 machine, and, if your Honor will recall, the conference on May 2, 1956 had ended on this note, that Messerschmitt's patent attorney wanted to look at the 319 machine and compare it with Messerschmitt's patents and patent applications.

On Mr. Busselmeier's examination of the 319 machine, he discussed the matter with Singer-Germany, with Mr. Adamson of Singer-Germany, who in turn reported to Singer in New York, and Singer-Germany reported that Busselmeier had said that the cam mechanism unit of the 319 was the same in principle with the Messerschmitt machine. This is Plaintiff's Exhibit 74 in evidence, your Honor, and some of the facts come from the stipulated facts in paragraph 50. Busselmeier said that an amicable settlement would be in the interests of both Singer and Messerschmitt because only competitors would profit by a dispute which would partly destroy or narrow the claims of either the Singer or Messerschmitt patents and that he and Singer should meet as soon as possible and both put the patent applications on the table, [fol. 705] which they believed to be infringed by the other's design.

Now, your Honor, the competitors were free at any time to challenge either the Singer patent or the Messerschmitt patent. Singer was free to litigate the Messerschmitt patent or to settle that litigation as it saw fit, but Singer could not be compelled to litigate the Messerschmitt patent for the benefit of its competitors.

On June 15, 1956, referring to Defendant's Exhibit 85 in evidence, Singer Germany passed along a letter from Busselmeier in which Busselmeier formally concluded that not only did the 319 machine agree identically in its essential principles with the machine covered by the Messerschmitt patent applications filed sometime before, but that even in structural details there were surprising conformities and identities. He suggested that he and Mr. Stanford prepare a proposed agreement, that inasmuch as Messerschmitt had filed the patent applications not only in Germany and in the

United States but also in a number of other countries, that agreement, if made, should be a global arrangement.

Turning to Defendant's Exhibit 86 in evidence, a letter of June 27, 1956 from Mr. Stanford to Mr. Adamson of Singer [fol. 706] Germany, Mr. Stanford advised Singer Germany that he agreed that an amicable settlement should be reached as only competitors would profit from litigation between Singer and Messerschmitt, that he had the impression that Messerschmitt felt that its position was favorable, which was fostered by the fact that it was Singer which had initially approached Messerschmitt, that he believed that within a week or two a conflict would develop between Singer's and Messerschmitt's United States patent applications and that it would be to Singer's advantage if this conflict developed before there were any further talks with Messerschmitt. Mr. Stanford advised also that no urgency should be displayed because Singer believed that when Messerschmitt learned of the conflict from the United States Patent Office, it would be stimulated into making further inquiries of Singer.

On or about July 10, 1956, as appears from the statement of facts, Singer learned from the United States Patent Office that its Perla application interfered with another patent application which Singer had no doubt was Messerschmitt's. Mr. Stanford advised Mr. Waterman of this fact and that he fully expected Messerschmitt to proceed with the [fol. 707] interference. He predicted that Singer would prevail over Messerschmitt in the interference because Perla had invented the concept of a plurality of cams each with its own follower before the earliest date on which Messerschmitt had applied for a patent, but that the reverse situation was true in Europe where Messerschmitt could establish a patent application date prior to Singer's application date, and this, your Honor, is the exhibit I referred to earlier in the presentation of these papers where Mr. Stanford says, and I quote:

> "It is for this reason that it would be to our best interest to enter into an agreement with Messerschmitt." We will beat them in the United States. They will beat us in Europe. The answer is cross licensing.

In Plaintiff's Exhibit 77 in evidence, on July 16, 1956, Mr. Stanford advised Singer-Germany that Messerschmitt probably would receive word shortly that its United States patent application had been placed in interference and that Messerschmitt would realize that this interference was with Singer's Perla application. Mr. Stanford said that for tactical reasons Messerschmitt should not be advised of the pending interference but that it should be told that Singer saw no [fol. 708] reason why a settlement could not be reached. Mr. Stanford didn't want any sense of eagerness to be displayed but he suggested that a definite place and date for a meeting be arranged and that, upon learning of the interference, Messerschmitt would make inquiry. That is in Plaintiff's Exhibit 77 in evidence. This letter again demonstrates that Mr. Stanford was using the United States interference as his major bargaining weapon to get a royalty-free cross-license with Messerschmitt and that there was not any other purpose.

In Defendant's Exhibit 89 in evidence, Mr. Waterman wrote to Singer-Germany on August 8, 1956 that he and Mr. Stanford would be traveling to Germany shortly, shortly after the 1st of September, because by that date Messerschmitt would have heard from the United States Patent Office of the pending interference between Perla and the Messerschmitt application, and, of course, that would be the ripe time to negotiate with Messerschmitt.

This exhibit, Defendant's Exhibit 89, together with Mr. Stanford's letter to Mr. Adamson of Singer-Germany on June 27, 1956, Defendant's Exhibit 86 in evidence, also demonstrates Singer's attempts to obtain a stronger bar- [fol. 709] gaining position with Messerschmitt.

A conference was arranged, and it was delayed from time to time until September 24, 1956, the delays being due in part to Singer's desire to ensure that Messerschmitt knew of the interference in the United States. This, your Honor, is in the stipulated facts, paragraph 53.

The interference was declared by the United States Patent Office on September 17, 1956. At the conference on September 24, 1956 agreement was reached that patent questions be settled by cross-licensing, but before signing the cross-licensing agreement Messerschmitt wanted to obtain certain releases from its distributor and exclusive licensee in the

United States, which is paragraph 54 of the stipulated statement of facts.

I turn now, your Honor, to Plaintiff's Exhibit 78 in Evidence, a letter dated November 2, 1956, in which Mr. Waterman wrote to Mr. Lightner, who was then in Tokyo, saying that he and Mr. Stanford had reviewed the situation with Messerschmitt's Washington attorneys and that the release of the exclusive licensee in the United States had been executed. Messerschmitt's Washington attorney was entirely [fol. 710] in accord with the draft agreement that had been left with Messerschmitt in Munich and advised that a director of Messerschmitt would be in the United States in about a month and at that time the agreement would be signed, and with the signing of this agreement, Mr. Waterman expressed the hope that it would settle all Singer's patent problems concerning zigzag machines where there appeared to be some danger. Said Mr. Waterman, "I think we are really very fortunate."

The Court: Do I understand, Mr. Wesely, that as a result of the negotiations between Singer and Messerschmitt there was only an exchange of patent rights or licensing rights such as affected the 319 Singer machine which was manufactured and marketed entirely outside the United States?

Mr. Wesely: Yes, your Honor. The 319 machine is no longer manufactured in the United States. It was in earlier years.

The Court: But this Perla patent and the Messerschmitt patent covered only the 319 machine?

Mr. Wesely: Your Honor, the patent also disclosed the control of the needle bar by cam mechanism and also disclosed with that the control of the feed by cams. Singer was manufacturing the 319. In its machine it used the Perla [fol. 711] concept of a stack of cams each with its own follower. Messerschmitt did also, your Honor.

The Court: Did Singer at any time grant to Messerschmitt a license under the Harris Reissue patent? The agreement that is signed is kind of broad.

Mr. Wesely: Your Honor, the agreement relates only to the machines disclosed in the drawings annexed to it.

The Court: All right. I don't have the drawings but I think they have since been submitted to me.

Mr. Wesely: Your Honor, the drawings are Exhibit 84 to the statement of facts.

The Court: All right. I have them now. The trouble is I did not see the drawings before.

Mr. Wesely: I think it might be helpful to refer to the chart which was submitted as an aid to the court yesterday which sets forth the relevant provisions of the three agreements, including the Messerschmitt cross-licensing agreement.

The Court: All right. You may go ahead.

Mr. Wesely: I should like to return to the licensing agreement, your Honor, and answer some questions that were [fols. 712-713] raised during the course of the government's presentation.

. . . . . .

[fol. 714] On December 11th, six days later, the Singer patent department reported to the company on the infringement status throughout the principal countries of the world of the Singer 319 machine. It advised, first, that the 319 infringed Belgian and Italian patents owned by Messerschmitt and that it presumed that because there were corresponding applications in Germany and Great Britain, there would soon issue in those countries patents which could be infringed by the 319 machine.

It advised further, and this appears in the statement of facts, paragraph 56, and Plaintiff's Exhibit 84 in evidence, that Messerschmitt had a corresponding United States application and that Singer expected to prevail in the interference proceeding which would result.

Third, the question before Singer was what action to take in connection with Messerschmitt so that Singer could freely manufacture and market the 319 machine in Germany, Belgium, Italy and Great Britain.

Fourth, it would be to Singer's advantage to have a cross-licensing agreement executed as soon as possible in view of the present or potential infringement of the 319 machine in [fol. 715] Italy and Great Britain, in both of which Singer had manufacturing plants.

Fifth, Messerschmitt undoubtedly realized that it would lose the United States interference proceeding and that its machine would be subject to an action for infringement by

Singer based on several Singer-owned patents. Those patents were the Perla patent when issued, the German Tiesler patent previously referred to, and the Way United States patent concerning the manner of mounting the motor in a sewing machine.

The patent department recommended that Singer make no further overtures to Messerschmitt lest this be interpreted as eagerness stemming from a weak position.

On December 21, 1956 Singer was advised that Messerschmitt would sign the cross-licensing agreement without any arrangement under which Messerschmitt would manufacture sewing machines for Singer. That is paragraph 57 of the statement of facts. Singer received the cross-licensing agreement and considered it deficient because it would license Messerschmitt to make machines disclosed in Messerschmitt's German applications without specifying the applications. It had been agreed that Messerschmitt would be licensed to make a particular Messerschmitt machine disclosed in specific Messerschmitt applications.

[fol. 716] On March 8, 1957, Defendant's Exhibit 91 in evidence, Mr. Stanford so advised Messerschmitt's Washington lawyers and further advised that Mr. Waterman expected to be in Germany and, if there was any need for further discussion, it could be had at that time. Mr. Stanford noted in Defendant's Exhibit 91 that this type of patent agreement, quoting from Mr. Stanford, "permits each party to continue to manufacture and sell its respective machine throughout the world without the necessity of costly interference and opposition proceedings as well as protracted patent litigation."

On April 16, 1957 there was a conference of Singer and Messerschmitt representatives, and the licensing agreement was reached and signed. It provided, your Honor:

> "1. Singer will not bring any infringement action against Messerschmitt under the rights derived from patents now issued or to be issued in any country with respect to subject matter disclosed" in three drawings identified and annexed to the agreement—and continuing with the agreement—"and when embodied in [fol. 717] sewing machines manufactured and sold by Messerschmitt.
>
> "2. Messerschmitt will not bring any infringement

action against Singer under the rights derived from patents now issued or to be issued in any country with respect to subject matter disclosed in Singer's German patent applications S 46,453, filed on November 23, 1955, shown in drawings annexed to the agreement and another patent application shown in drawings annexed to the agreement——

"and when embodied in sewing machines manufactured continuing reading from the agreement——

and sold by Singer.

"3. Singer and Messerschmitt each agrees not to institute in any country any opposition, nullity or invalidation proceedings against or otherwise to attack in any country the other's patents or patent applications corresponding to Messerschmitt's constructions as illustrated in the drawings indicated in paragraph 1 and to Singer's German applications indicated in paragraph 2, and to immediately withdraw any such proceeding if [fol. 718] it has already been instituted, provided, however, that if such patents and patent applications are or have become involved in a patent office priority determining proceedings, such as a United States interference or Canadian conflict proceeding, then both parties will work together in order to settle such proceeding in accordance with the laws and regulations of the patent office concerned and in the spirit of this agreement."

In short, the three Messerschmitt machines were covered because there were infringements of Singer patents in each of those, and Messerschmitt was to be free to manufacture those machines.

Your Honor, after the agreement was signed Mr. Waterman cabled Mr. Lightner of this fact and he said that the 319 machine was completely free "same idea as with Vigorelli and Gegauf." That is Plaintiff's Exhibit 88.

There are portions of Plaintiff's Exhibits 88, 142 and 87 which deal with the assignment of Messerschmitt's United States patent application. The assignment of its foreign patents is discussed in other documents having to do with those matters.

[fol. 719] Plaintiff's Exhibit 87 in evidence amplified a portion of his cablegram concerning the making of the cross-

licensing agreement. Mr. Waterman wrote to Mr. Lightner on the day after the signing of the agreement that the agreement precluded Messerschmitt from taking any action against Singer machines which have in them the features of the 319 Perla patent application and that similarly Singer would take no action against Messerschimtt's presently-designed machine. Waterman mentioned Messerschmitt's financial condition operated in Singer's favor and that Messerschmitt did not want to incur any further expenses in present or future interferences. The 319 machine was thus cleared for manufacture and sale throughout the world, and Singer had been able to obtain this freedom without royalty even though, as Mr. Waterman's letter states, Singer would make a hundred machines for every one of Messerschmitt's.

* * * * * * *

[fol. 720] There is just one more document on this cross-licensing, your Honor, that is important. It shows the value of the Messerschmitt agreement and it is spelled out in a report of the patent department for the year 1957. That exhibit, your Honor, is Plaintiff's Exhibit 67 in evidence and here the patent department reports:

> "Probably the most important single accomplishment of the past year was the agreement reached with Messerschmitt A. G. of Germany. This agreement permitted Singer to continue to sell the Class 319 machine in all of the countries of the world without fear of being charged with patent infringement by Messerschmitt, released us of all possible charges which may have been [fol. 721] made for past infringement of its patents, and made possible future marketing of the Class 320 machine."

Coming down the line:

> "In return, Singer agreed that Messerschmitt could contine to sell its multiple-cam machine (which is similar to our Class 319 machine) in the United States."

Now, your Honor, I would like to turn to those papers which have come to be known as dealing with the Messerschmitt foreign patents. At the conference in Germany dur-

ing which the cross-licensing agreement between Singer and Messerschmitt was executed, Messerschmitt indicated that it would assign to Singer the patents and patent applications it had in various foreign countries under which Singer was licensed to manufacture the 319 machine.

Plaintiff's Exhibit 88 in evidence is Mr. Waterman's cable to Mr. Lightner in which he advises Mr. Lightner that the cross-licensing agreement has been signed, and he further advises Mr. Lightner that the foreign patent situation would be studied. It is clear from the face of this cablegram, your Honor, Plaintiff's Exhibit 88, that the reference in the cable to "Japanese" applies only to the foreign patent [fol. 722] situation and not to the United States, and in Plaintiff's Exhibit 88, Mr. Waterman is simply advising Mr. Lightner that he would study the situation to determine if the cost of maintaining the patents was justified in terms of protecting the 319 from infringement. He was going to study the situation to see if there were 319 type machines which would infringe the patent and which would interfere with the proper protection of the Singer 319 machine.

The Japanese were Singer's biggest competitor, and if the Messerschmitt patents had any value as against its biggest competitor, then there might be some value.

Defendant's Exhibit 94, Dr. Wiegand's letter to Mr. Stanford of May 14, 1957, shows that at the beginning of the discussions between Singer and Messerschmitt on this matter, foreign patents, Messerschmitt's primary consideration was the cost of maintaining foreign patents. Wiegand reported on his discussions with Fuchshuber and Busselmeier that they thought that the new Board of Directors of Messerschmitt would agree to assign the foreign patents to Singer if Singer would prosecute the applications, pay the maintenance costs and grant back a license to Messerschmitt. In [fol. 723] reply to this letter, Mr. Stanford wrote, Plaintiff's Exhibit 97:

> "In return for the assignment of these patents and patent applications we would agree to assume the prosecution of all the applications, pay the cost of obtaining the patents which have been issued to date, and pay the yearly fees for the maintenance of the patents. In addition, we would agree to grant Messerschmitt a license under each of the patents. In short, we would like an

assignment and agreement similar to the one we now have with Messerschmitt for the United States application Serial No. 548,481."

* * * * * * *

Your Honor, the government has introduced these documents on the Messerschmitt foreign patent negotiations to [fol. 724] show Singer's purpose and intent, and in that connection I would like to refer to page 5 of Defendant's Exhibit 95 in evidence, which is a memorandum of this October 16, 1957 conference:

"During an interval of the conference in which the gentlemen Waterman and Stanford had an appointment regarding a different matter, the above-mentioned principles were drafted and translated into English by Patent Agent Niemann and Patent Agent Mr. Busselmeier.

"When the gentlemen returned from their meeting and read over the wording of the above statements, Mr. Waterman made the objection that the way proposed would under no circumstances be acceptable, because this wording would mean a clear infringement of the antitrust law in the USA. It was tried then to find a more simple wording of the above-mentioned points or to fix this wording without it becoming expressly contents of the agreement to be made. But against this too Mr. Waterman has apprehensions because such agreements must be made complete and according to the truth and because he would, when questioned on the [fol. 724a] completeness of the agreement, not be able to declare with a good conscience that no additional arrangements have been made."

After this conference, Mr. Waterman reported to Mr. Lightner on these negotiations.

[fol. 725] Government's Exhibit 103 in evidence, according to the last paragraph of the first page, Mr. Waterman says "Just to show you what we went through in enduring the negotiations I am enclosing two typewritten sheets. All this about sub-licensing others promiscuously and division of

territories where the machines would be made and sold was pushed aside very quickly."

These exhibits, your Honor, do show Singer's intent. They demonstrate that when certain proposals were drafted and Singer learned of them, Singer objected on the ground that they constituted a violation of the United States antitrust laws.

The exhibits show that Singer refused to enter into any agreement, written or oral, which it believed violated the United States antitrust laws.

The exhibits demonstrate further that Singer would not enter into any written contract unless that contract expressed the complete understanding of the parties to the agreement.

Coming to Plaintiff's Exhibit 104 in evidence, this letter from Singer Germany to Mr. Stanford, it reports a visit by Mr. Busselmeier, who represented Messerschmitt and had telephoned Mr. Adamson of Singer Germany to arrange for [fol. 726] a meeting to discuss a matter which was so highly confidential that it could not be treated either on the telephone or in a letter.

What was this highly confidential matter?

Well, when Mr. Busselmeier came he said that Messerschmitt was considering selling its sewing machine business and that it thought that such a sale would be facilitated if the patent rights were included as part of it.

Busselmeier was obviously sounding Singer out to determine if it was going to buy the Messerschmitt sewing machine business. He even named a price.

Singer was not interested in buying Messerschmitt's sewing machine business but had indicated an interest in acquiring the Messerschmitt foreign patents covering the 319 machine, the sales of which were doing very well in Europe.

The government attached significance to certain language in this letter.

The fact of the matter is that Busselmeier came to Singer with a sales talk and Singer replied with sales talk.

Mr. Waterman told Busselmeier that Singer was not interested in acquiring Messerschmitt's sewing machine busi- [fol. 727] ness; nor was Singer interested in Messerschmitt's foreign patents if they had to buy the business to get them, but that "Singer believed that Messerschmitt

might care to get a substantial round sum" $25,000—for its patents.

As the letter recites "the conference thus ended, unfortunately, with little prospects of the proposed Singer-Messerschmitt agreement being signed in the near future."

Busselmeier suggested the alternative that if Messerschmitt sold its sewing machine business, Singer grant the same license to the purchaser as granted to Messerschmitt.

Defendant's Exhibit 97 in evidence is where Singer redrafted the agreement to cover this situation and forwarded it to Messerschmitt.

The documents reflect that nothing further was done in the matter, which was in fact the case—and there the negotiations ended.

The Court: Thank you, Mr. Wesely. You have very ably presented your client's case.

Suppose we take a five-minute recess.

(Recess)

Mr. Pettit: Your Honor, I would like to offer in evidence [fol. 728] at this time the Messerschmitt sewing machine. This is the Messerschmitt machine that is the equivalent of the 319—and when you put the 319 next to it (demonstrating), you can see the identity of the two mechanisms.

The Court: Any objection?

Mr. Elkins: No objection.

The Court: Received in evidence.

(Marked Defendant's Exhibit 118 in evidence.)

The Court: I see there are two sets of cams—I have just observed that there are two sets of cams on the Messerschmitt machine.

Mr. Pettit: They are merely divided by a cog here. It is the same principle—a stack of cams and a follower for each one.

The Court: I note that in one stack, for instance, I see six cams which are located on what I would call the front of the machine, that is, the part that faces the operator ordinarily, and the other stack has four.

Mr. Pettit: Yes.

The Court: Is there any significance in that arrangement of six and four in groupings?

Mr. Pettit: The only significance is that ten cams and they [fol. 729] are arranged in such an order that there is a cog in the middle.

The Court: Does each cam have a different configuration on perimeter?

Mr. Pettit: Yes, and each cam has its own follower.

The Court: And the follower is selected for the cam by moving one of these levers at the top on the Messerschmitt?

Mr. Pettit: That is right. The particular cam is chosen by using this (indicating).

The Court: Let us see the mechanism of the 319.

There are five cams and five levers to be raised, which provide the individual follow-up of each particular cam.

Mr. Pettit: That is correct, your Honor.

The Court: Can two levers be put into operation simultaneously on the 319?

Mr. Pettit: They may, and also on the Messerschmitt.

The Court: And on the Messerschmitt, too?

Mr. Pettit: Yes, and, your Honor, to the extent that they can be put in operation at the same time, they are antedated [fol. 730] by Johnson.

The Court: Except that Johnson accomplishes the follow-up of two cams by a different means.

Mr. Pettit: Two cams by two followers, but it embodies the principle of taking information from two cams by separate followers at the same time.

It was the Vigorelli machine that has the one follower to the adjacent cams.

The Court: I see: Johnson has it separate.

Mr. Pettit: Johnson has it separate, and what is involved here is the idea of a follower for each cam.

Johnson had two followers. On this you are able to get a patent because it has a follower for each cam.

The Court: The basic invention of the Johnson patent, then, so that I understand it, was that it——

Suppose you state it.

Mr. Pettit: It embodies the idea of taking information from two cams at the same time by separate followers.

The Court: How about the Perla invention?

Mr. Pettit: Only because—I do not know whether it is a [fol. 731] step further or not, but at least it is a step in

addition, that it provides for a follower for each cam. The patentable concepts sometimes are a little narrow.

There is nothing in the Perla application except the idea of the separate follower for each cam, capable of being used together.

The Court: Does the 319 employ the Johnson invention?

Mr. Pettit: To the extent that it uses or takes information from two cams at the same time.

The Court: The Messerschmitt machine, which is now in evidence as Exhibit 118, I understand it is not disputed that this does employ the same invention which is set forth in the Perla application and allowed in the Perla patent.

Mr. Pettit: I think that is even set forth in the statement of facts.

The Court: Does this Messerschmitt machine also employ and embody the Johnson invention?

Mr. Pettit: I do not know whether I can answer that except as I have—that it takes the idea of taking information from two cams at the same time and embodies the Johnson idea.

[fol. 732] The Court: All right, thank you.

Mr. Elkins: Your Honor, may I ask if we are going to have testimony as to the general subjects that we have been discussing here at the bench for the last three or four minutes?

The Court: Mr. Pettit indicated he might call an expert on this subject to describe the various machines, so that you will have it on the record.

Mr. Pettit: Your Honor, I believe that everything we have discussed here is in the statement of facts agreed to.

The Court: But on any other matter that is not set forth in the statement of facts.

Mr. Pettit: Is there anything here that is not in the statement of facts?

Mr. Elkins: My question was directed to the general field, and there are a great number of things—for example, this Messerschmitt machine, as we see it here, Exhibit 118, does not follow the subject matter of the Messerschmitt United States patent application. There is provided in that Messerschmitt application other mechanisms.

Mr. Pettit: That is correct. I am just getting ready to deal with that, and that is the reason I am bringing this

[fol. 733] machine out so that you can see that it does not have that.

The Court: I appreciate this colloquy but I do not approve of it.

Suppose we go back and try our case.

DISCUSSION OF SIGNIFICANCE OF EXHIBITS BY MR. PETTIT

As I mentioned before, your Honor, the Messerschmitt matter is divided into three rather separate and distinct parts.

Mr. Wesely addressed himself to the cross-license agreement that was concluded—that was the first step.

He also addressed himself to the matter of the attempt of Singer for a certain length of time to buy Messerschmitt's foreign patents.

The third one, the one to which I will now address myself to, involves the acquisition by Singer of Messerschmitt's U.S. application, which application and the drawings in it covered this machine insofar as this machine incorporates the idea of multiple cams with separate followers for each cam.

That application also had in it a disclosure of cams to operate the feed mechanism of the machine. That was not the movement of the needle-bar but the movement of the feed mechanism. That moves the material through the [fol. 734] machine.

The Messerschmitt machine, as Mr. Elkins has just indicated, does not embody that concept, nor does the 319 Singer machine.

After cross-licenses had been obtained, there was left, then, the problem of what would become of the Messerschmitt application in the United States and the Perla application of Singer's in the United States.

It was perfectly apparent, and it was a fact, that the Perla concept, the Perla priority date was ahead of Messerschmitt.

Messerschmitt had no prospect of success in the United States, and that was shown in various documents that were marked and read from by Mr. Wesely.

It was a conceded fact that Singer would beat Messerschmitt in the United States, and that was Singer's bargaining power with Messerschmitt, with reference to foreign

situations, and the right to get into foreign countries with Singer's 319 machine.

Now the result of that was that so much of the Messerschmitt application as related to the multiple cam machine affecting the needle-bar would have to be eliminated from it and abandoned—and in fact when Singer obtained it, it [fol. 735] was because the material in it belonged then and could go in only to the Perla application, and that feature is embodied in the Perla patent.

That left the Messerschmitt the U.S. application relating only to the mechanism controlling the feed.

Now with that in view, Messerschmitt, as will be seen from Government's Exhibit 89, a letter dated April 25, 1957, addressed to Dr. Wiegand and signed by Mr. Stanford, verbally agreed at the conclusion of the cross-license agreement to assign to Singer all of its rights in this United States patent application.

This letter states:

> "In return for this assignment it is our understanding that Singer would continue at its own expense the prosecution of this application before the United States Patent Office for the purpose of acquiring, if possible"——

and I wish you would note the words "if possible"——

> "a good and valid patent".

Now the significance of the words "if possible" is that everyone realized that it very well might not be possible, and that is the explanation why Messerschmitt assigned it without any cost if Singer would do the prosecuting and [fol. 736] spend the money and try to get the patent, and if it succeeded would then give Messerschmitt a license.

Now the end of the story I want to tell you is, so that you can follow it as you go along, it was not possible. Singer did prosecute and Singer did try to get the patent and every claim was rejected by the Patent Examiner, and it has now become finally and officially abandoned.

We will offer the documents that show that—I have shown them to the government, and there will be several other documents that we want to put in at the same time.

So here was a situation in which we were to take and try to prosecute it, with reference to a very particular and limited situation, and try to get a patent.

You will remember that this is the same feed mechanism that Singer was interested in when it was dealing with Vigorelli. Vigorelli had another patent, entirely distinct, that we have been talking about in this hearing—and you had read some letters just yesterday—and Singer was interested there in seeing whether it could acquire or get rights under a patent relating to feed mechanisms—and as I was [fol. 737] told later, it ended up paying Vigorelli $25,000 in order to get a license for Vigorelli's feed mechanism.

I point this out merely to show that there was an interest in Singer in trying to get the feed mechanism.

They sent documents to accomplish this assignment.

There then follows a series of documents which the government read from at length, and they stress non-transferability, non-assignability and various other features and items that appear in it.

This whole series of letters deals with the fact, first, that Singer was not willing to spend its money and its time in trying to get a patent and then, if it succeeded, having Messerschmitt have the right to give a license to anybody and everybody in the world. Quite obviously it protested, and a good part of this correspondence is merely setting forth Singer's not only objection but utter and complete unwillingness to permit Messerschmitt to have the right to license this patent, to assign this patent freely to people if Singer was going to spend the money to get it—and what good in the world would it be to Singer after it spent its money to get it if Messerschmitt could license it to anybody [fol. 738] in the world.

Other features of these letters relate only to the fact that Messerschmitt was afraid that the form of the agreement would affect the cross-license agreement that had already been made, and therefore they were arguing for language that in dealing with this particular transfer of this particular portion of the application, that that language would not adversely affect them under their prior agreement, and they therefore tenaciously fought for language that would still leave their rights under the license agreement in effect—and that is all that this language means, running through several

letters in which one was wanting transferable, assignable rights, and the other was wanting non-transferable and non-assignable rights.

In Defendant's Exhibit 92, May 14, 1957, a letter to Mr. Stanford, Dr. Wiegand states:

> "Messerschmitt is willing to execute an agreement on the general lines of the document (3)"——

a document which had been sent by Mr. Stanford——

> "'and is willing to accept a 'nonexclusive, *nontransferable* and royalty-free license' as regards U.S.-Patent [fol. 739] Application Serial No. 548481 provided that"

certain conditions were set forth in it.

In other words, with reference to any patent that might issue on the feed mechanism, he recognized that he should accept and was willing to accept a non-exclusive, non-transferable and royalty-free license. And, your Honor, that had absolutely nothing to do with the 319 machine, as was implied so many times by the government—at least I understood that is what they implied.

On page 2 of this same letter he says:

> "The main objection of Messerschmitt was made to the word 'nontransferable license'. I succeeded, however, in overcoming this objection by suggesting a reference to the agreement of April 16, 1957, in order to make clear that Messerschmitt's right to grant licenses as regards their constructions K1.52KE, K1.53Ke and K1.54KE remains unaltered."——

which makes it perfectly clear that Messerschmitt was worrying only about the earlier license agreement and under that they retained all their rights to grant licenses.

That provision was incorporated in the agreement of assignment, and the net result is that Singer obtained the [fol. 740] assignment for the purpose of trying to prosecute it, which it did unsuccessfully, with the understanding that it would give a license to Messerschmitt which Messerschmitt could not then go around and license to anybody in the world, but that Messerschmitt would retain all of its

right and freedom to license that it had under the license agreement which related to the 319 machine.

Now there is another point with respect to this. Mr. Weinstein was heard to say time and again that we obtained this application even though we were licensed under it. Now it simply is not a fact. We were not licensed under any patent that could come out from this application, and the reason we were not licensed under any patent that might come out from this application is that the license that was granted in the cross-license agreement specified with great particularity what was licensed. And, your Honor, I wish you would note this, because this is in flat contradiction to something said by the government, and therefore I would like for you to look at the divisions that appear on the right side of this chart of the three different agreements, because that agree-
[fol. 741] ment shows exactly what was licensed under the cross license agreement.

Do you have the chart or was that taken away?

The Court: I have it right here (indicating).

Mr. Pettit: You will notice it says:

> "Messerschmitt
>
> will not bring any infringement action against Singer under the rights derived from patents now issued or to be issued in any country with respect to subject matter disclosed in Singer's German patent applications No. S.46,453 VII/52a as filed on 23rd November, 1955, and shown in the annexed drawing (Figures 1-62) and No. S.46,580 VII/52a as filed on 2nd December, 1955, and shown in the annexed drawings (Figures 1-13) and when embodied in the sewing machines manufactured and sold by Singer."

Now if one will look at the drawings he will find that no mechanism was included controlling the feed of the machine.

It is therefore perfectly clear that the license did not extend to this type of feed mechanism if it came out of the patent under this other application.

[fol. 742] What Singer's got a right to make under the Messerschmitt license was a machine it was making and is described in the drawing.

Therefore Singer was in the position that although it was

interested, very much interested in this feed mechanism or in some kind of feed mechanism, if it did not take this patent, it could be foreclosed in the United States from the use of that kind of mechanism.

This is all pointed out in a letter of May 24, 1957, Government's Exhibit 94, where in a letter to Adamson by Mr. Stanford, it is stated:

> "In answer to your questions we would state that under the Singer-Messerschmitt agreement of April 16, 1957 Singer agreed not to enforce against Messerschmitt or any of its licensees and customers any rights derived by Singer from any patents in any countries with respect to subject matter disclosed in certain specified Messerschmitt drawings which were annexed to the agreement. These drawings disclose three existing Messerschmitt sewing machines of which none employs the automatic feeding mechanism which is disclosed in the Messerschmitt U.S. patent application Serial No. [fol. 743] 548,481 which forms the subject matter of the proposed new Singer-Messerschmitt agreement mentioned in the first paragraph of this letter.

It goes on to say in the second paragraph, on page 2:

> "In other words, although Messerschmitt in the United States has the right to make and sell machines of the type designated in the Singer-Messerschmitt agreement of April 16,"——

which is the cross-license agreement——

> "and to license any other parties to make and sell such machines in the United States, under the newly proposed Singer agreement, Messerschmitt will have the right to make and sell in the United States on its own account machines incorporating the automatic feed of patent application Serial No. 548,481, they will not be able to transfer such right to other parties. We do not believe that the two agreements mentioned above conflict with each other."

Now your Honor, the end of the story on that attempt to get a patent and Singer's doing it "if possible" is set forth

in the rejection by the Patent Office, which is set forth in [fol. 744] Government's Exhibit 181 at pages 87-90, and by the subsequent communications between Singer and the U.S. Department of Commerce.

The first of these reads—it is addressed to the Commissioner of Patents—"Will you kindly advise the date upon which the above entitled patent application became abandoned?"

The reply says: "Responsive to letter filed May 9, 1961.

> "This application became abandoned on May 4, 1961, for failure to prosecute within the six-month statutory period from the last Office action. See Rule 135 of the Rules of Practice."

Singer had reached the end of the line and stopped trying after several rejections.

Now your Honor, that is all on that.

The Court: Off the record.

(Colloquy off the record.)

(Adjourned to May 15, 1961, at 11 A.M.)

[fol. 745] UNITED STATES OF AMERICA

vs.

THE SINGER MANUFACTURING CO.

New York, May 15, 1961, 11.00 o'clock a.m.

(Trial resumed.)

Mr. Pettit: Your Honor, we have gone through the Vigorelli cross-license and the Gegauf cross-license and had reached the stage of taking up the Gegauf assignment.

I would like to read first an extract from the Annual Report of the Patent Department for the year 1956, Defendant's Exhibit 35. This sums up the position of the Patent Department as to what it had done with respect to these license agreements. This is the report that goes to Mr.

Waterman, to the President and to all the officers of the company.

> "During the past year the Patent Department continued to be actively involved with the patent situation surrounding the Singer Classes 401 and 319 machines. As mentioned in our 1955 Patent Report" (and I am reading now from page 5) "there appeared to be at [fol. 746] least two outstanding groups of patent applications owned by competitors which would interfere with the manufacture and marketing of the Classes 401 and 319 machines in the various principal countries of the world, such applications being owned by the Italian firm of Vigorelli and the Swiss firm of Gegauf-Bernina. In 1955 Singer was able to negotiate a free license agreement with Vigorelli, and during 1956 a similar agreement was executed between Singer and Gegauf-Bernina."

I think that shows at least what Singer thought that Singer had done.

We come, then, to the first memorandum, the first written document dated subsequent to the signing of the Gegauf-Singer cross-license agreement. That is Government's Exhibit 27. You will notice it is dictated by Mr. Waterman in Milan with reference to a conference held in Milan on April 20, 1956, which was just one week subsequent to the signing of the cross-license agreement.

At this point I want to call attention to the fact that we [fol. 747] still do not know whether the government contends that the cross-license agreement was part of the conspiracy or was not.

COLLOQUY

The Court: Perhaps the government will give you that information now.

Mr. Elkins: I would be happy to, your Honor. If opposing counsel will tell us what cross-license agreement he is referring to, the one in particular——

Mr. Pettit: Singer-Gegauf.

Mr. Elkins: Singer-Gegauf, your Honor, we did take the position that that is unlawful even aside from the conspiracy.

The main thrust of the conspiracy as charged by the government relates to the assignment by Gegauf to Singer of the Gegauf two United States patent applications, and, as we say, for the purpose of enabling Singer to use the patents resulting therefrom in conjunction with its own in order to limit or exclude competition from Japanese manufacturers.

Mr. Pettit: Forgive me. I just asked that because I didn't intend to give way for a speech.

The Court: When we ask a question we must give the witness an opportunity to make an answer, so sometimes that is one of the perils of asking the witness a question. I do [fol. 747a] not think he intends to make a speech even though that may be the effect of it. I will not deny him that privilege.

Go ahead.

[fol. 748] Mr. Elkins: I am merely trying to put it in its proper place, your Honor.

We say that that conspiracy, as I have just described it, is the main thrust of the government's charges and that, standing alone, it is unlawful and that it needed no aggravation. However, we say that it was aggravated by an agreement entered into previously between Singer and Gegauf under which each undertook not to do anything in any country of the world which would have the effect of narrowing claims of the other.

The Court: So then I understand from your statement that it is the Government's contention that the first Gegauf-Singer licensing agreement was an act done in pursuance of the conspiracy.

Mr. Elkins: That is true, your Honor, and the facts, however—yes, that is true, your Honor.

The Court: All right. That is the answer to my question. The answer could have been yes. All right.

Mr. Elkins: We say, your Honor, that it was the beginning of the conspiracy, the format of the conspiracy as of April, 1956, and it is the beginnings of the conspiracy, and I am still merely trying to put it in its proper place. Some time [fol. 749] thereafter a representative of Singer proposed a letter to Mr. Gegauf, and this is sort of——

The Court: When you say that it was the beginning of the conspiracy, do you mean that that was when the conspiracy

had its inception, or do you mean that it was one of the initial acts done pursuant to a conspiracy?

Mr. Elkins: That is when one phase of the conspiracy got its conception, and then as time went on other terms were added to the conspiracy until we come to what we consider to be the main part of the conspiracy, namely the assignment by Gegauf to Singer of Gegauf's United States patent application.

The Court: Isn't the government's contention that this was a developing and ever enlarging, encompassing conspiracy or that from the very beginning Singer had this whole thing, this whole pattern, in mind with Gegauf and with Vigorelli, this pattern to exclude Japanese importation?

Mr. Elkins: As of the time of the Singer-Gegauf agreement of April, 1956, to which opposing counsel refers, it is true, according to the evidence, that Singer intended at that time to buy the United States patent applications of Gegauf. [fol. 750] That is so much for the thinking of Singer as of that time. Gegauf at that time had not learned of Singer's plans to buy the patent application.

The Court: But you are not answering my query. At the time that Singer acquired its license from Gegauf, is it your contention that Singer acquired it for the purpose of asserting it pursuant to a conspiracy with Gegauf and Vigorelli against Japanese importations into the United States?

Mr. Elkins: No, your Honor, not as of April, 1956. All that they acquired then was a license, and something that could not be asserted against anybody.

The Court: Suppose we put the question now. We will have the stenographer read the question again to you, slowly.

(Question read.)

Mr. Elkins: No, your Honor, there was nothing there that Singer obtained that it could assert. It obtained merely a license.

The Court: Is it your contention that at the time this first licensing agreement between Singer and Gegauf was entered into there then existed a conspiracy between Singer and Gegauf and Vigorelli to take steps to stop Japanese importations into the United States?

[fol. 751] Mr. Elkins: That is true as far as Singer and Gegauf——

The Court: What is true?

Mr. Elkins: That at the time of the cross-licensing agreement between Singer and Gegauf in which each party agreed not to do anything to narrow the claims of the patent applications of the other that it was agreed between Singer and Gegauf that the purpose of that provision whereby neither would limit the claims of the other was so that broad patents could result so that those broad patents could be used more effectively against Japanese competitors.

The Court: Was Vigorelli a party to this conspiracy at that time, according to the government's contentions?

Mr. Elkins: No, your Honor, not to all of those terms as I have expressed them. He was cooperating. He was a member of the conspiracy at that time to the extent that he was aiding and abetting the agreement between Singer and Gegauf.

The Court: Well, aiding and abetting is a term of art in law which indicates a consciousness of wrongdoing which makes him, in criminal law, a principal. When you say one aids and abets in the commission of a crime, you charge him [fol. 752] in substance with being an accomplice, and therefore under the law he is a principal.

Mr. Elkins: At that time, your Honor, April, 1956, as to the terms of the then existing conspiracy as I have described them, Vigorelli, it appears from the evidence, was not a party to it. It was strictly between Singer and Gegauf at that time.

The Court: I think I should state for the record that I have examined these exhibits at some length over the weekend and I have examined the stipulated facts and I am getting a distinct confirmation of the question which has grown from pre-trial that this was no act of conspiracy involving three or four individuals or three or four business concerns, that the negotiations which were had between Singer and Vigorelli were separate and distinct from those which were had by Gegauf, and both of them were separate and distinct from those which were had with Messerschmitt, and it was all independent action had by Singer to protect its product and its invention as best it could under the existing circumstances.

Mr. Elkins: It is true, your Honor, there would be no dispute as to the Singer negotiations with Vigorelli being distinct from any negotiations between Singer and Gegauf [fol. 753] up to a point in April, 1956. I believe it is safe to say that everything that has been covered by opposing counsel involving negotiations between Singer and Vigorelli was entirely distinct from any subsequent negotiations between Singer and Gegauf. It was in April, 1956, at the Milan conference just mentioned by opposing counsel, where Vigorelli was brought into the scheme of having Gegauf assign his United States patent applications to Singer for the purpose of grouping those patents in Singer together with others owned by Singer.

The Court: It was entirely what I would call a usual business condition, part of an arm-to-arm negotiation which was had between Singer and Gegauf, and I can find nothing from my examination of all of the exhibits which have been marked or from the stipulated facts which have been received in evidence which would support an inference of any three-party conspiracy whatsoever in this case. I make that observation to you as a result of my extended weekend study which was preceded by a study of the exhibits throughout the week.

All right. Go ahead.

Mr. Elkins: It is true, your Honor, that the Singer-Gegauf [fol. 754] negotiations, which, as I say, are the principal part of the government's case, were carried on from beginning, I think, in April, 1956, or shortly thereafter up to the actual assignment to Singer by Gegauf, and Vigorelli is in the picture only at the beginning, and the exhibits in question reflect that Singer, instead of going to Gegauf, went to Vigorelli, gave the idea to Vigorelli, we say, of the advantages to Vigorelli and to Gegauf of Singer having control of the patent situation, and Vigorelli's participation——

The Court: I think that is an unholy suspicion not supported by evidence. That is my present reaction to it.

Mr. Elkins: I have to disagree, your Honor.

The Court: That's right. I find no fault with your disagreeing with me as an advocate, even though you might have another reaction outside of your professional capacity.

Mr. Elkins: I have none, your Honor.

DISCUSSION OF SIGNIFICANCE OF EXHIBITS BY MR. PETTIT:

Your honor, I understand the government's difficulty and embarrassment, and I think there comes an end to the time when someone can continuously evade. This was tight-walked for five pages, from pages 504 to 508. The same [fol. 755] thing has been done through today, and there is a reason for it.

If he tries to claim that the agreement itself was part of the conspiracy, he is in the anomalous position of having a conspiracy going to acquire a patent from Gegauf to enforce it at a time when Gegauf didn't have the slightest idea that Singer was going to acquire, was interested in acquiring, at a time when there has not been one single comment about the purchase or acquisition of it, including Vigorelli, Gegauf or anybody else. He is, therefore, quite embarrassed at pinning himself down to the fact that he claims that there was a conspiracy to transfer a patent at a time when the principal conspirator didn't know about it.

[fol. 756] If, on the other hand, he excludes the Gegauf agreement itself, the license agreement, and starts thereafter, he very soon finds that Vigorelli just has nothing whatever to do with anything thereafter. You have a straight transaction between the owner of a patent and a licensee by which the licensee seeks to acquire the patent from the owner —situations, of course, in which there is a mutual interest, but reduced to those simple terms, this conspiracy becomes utterly and completely silly. It is only by trying to straddle all of them, get all positions into the picture, and not take a position, that he has anything that he can argue about whatever, because obviously he has to get Vigorelli into it—that there would be a transfer; and that is the only way he can get him in. He has to get Vigorelli into it to have a conspiracy —and, your Honor, he has evaded for eighteen months and many pages and he hasn't given you a frank answer yet.

The meeting of April 20, 1956, one week after the execution of the Gegauf-Singer cross-license agreement was held in Milan, as a result of a desire of Mr. Vigorelli who had made arrangements to see our people, Mr. Stanford and Mr. Waterman when they came through Milan to attend a fair.

[fol. 757] Government's Exhibit 27 says in the second paragraph:

> "What Mr. Vigorelli had on his mind was that now"—and I repeat the word "now"—"that Singer, Bernina and Vigorelli had arrived at certain agreements they should thereafter act in concert against others."

Now that is a statement which shows pretty well that even then there wasn't anything done in concert before. This is the situation to be taken advantage of now that the agreements had been made, and hereafter they should work in concert.

The memo goes on:

> "This, we very promptly said to Mr. Vigorelli, was out of the question, and he was advised that what appeared to us to be proper action was for each one to prosecute his own patents and take care of any cases of infringement that might appear. We stated that, certainly, this would be Singer's attitude with respect to the patents that it owned."

That seems to me to eliminate any thought of concerted action either before or after, and Vigorelli was promptly told so.

[fol. 758] On the next page it says:

> "Upon learning that there could be no joint action by the three companies who have been mentioned in prosecuting patents against all others in the field, that subject was dropped."

Now comes the paragraph that causes the government the most pain. It is the first full paragraph on the second page:

> "At this point, I should perhaps be mentioned that Mr. Stanford and I have discussed between ourselves whether we should say anything to Mr. Gegauf about our feeling that we could prosecute his patents that will be issued sometime within the next few months in the United States better than perhaps he could if we owned them, but we had decided not to say anything to Mr. Gegauf about this at this time."

This is, of course, the same attitude and the same point—is shown again by reference to Defendant's Exhibit 33, a letter written by Mr. Williams to Mr. Stanford, which, in the second paragraph says:

> "I would gather that you had great difficulty in com- [fol. 759] ing to an agreement with Gegauf and that there was no opportunity under the circumstances to discuss with them the possibility of having Singer purchase the U. S. Gegauf patent application."

I understand that Mr. Elkins, in his most recent statement, conceded that on the record there was no discussion of a possible purchase of Gegauf at any time prior to the execution of the cross-license agreement.

What Singer did was to take advantage of this meeting which Vigorelli had arranged, in the hopes that he could get some joint action, and when that was turned down, Singer used the occasion to try to get indirect word to Gegauf, because he had the philosophy that approaching directly might enhance Gegauf's position as to what he would demand. That is a normal technique. That is not mine. I think I would have written and said, "I would like to buy your patent"—but nevertheless there is a philosophy that it is always better to have somebody else approach the man. They used this opportunity to have someone speak to Gegauf on a very simple proposition, and since Singer could enforce its patent better than he could, and it was rather [fol. 760] obvious it would be to his advantage to sell it to Singer.

This memorandum says:

> "In talking with Mr. Vigorelli's lawyer, Mr. Stanford dropped this view to him"—and, as your Honor pointed out, "this view" is quite clearly the one expressed above, that Singer could prosecute the patent better than Gegauf.

Gegauf is three thousand miles away, a small company. Singer is here, a big company, with a big patent department, and quite able to take care of itself far beyond the possibilities of Gegauf. It therefore is just simply obvious as one of

the facts of life that Singer could prosecute the patent better than Gegauf.

It is also one of the facts of life that Gegauf, sitting in Switzerland, could well realize that without anybody saying anything more than that, it was Singer who was here and who wanted the patent.

> It says "and the question was raised if we would have any objection if they were to pass the word on to Mr. Gegauf that they were raising this point. We said that, of course, we would have no objection but that we ourselves did not wish to do this, and we would not want the suggestion coming to Mr. Gegauf at this time [fol. 761] as from us. If they wanted to suggest it, it was all right."

Further it says:

> "Mr. Stanford believes that he would be able before the patent is issued to rewrite the claims and make it stronger than it now is and that it is a fact that, being in the United States, we would be better able to prosecute any claims against this patent than would Mr. Gegauf."

This alleged conspirator was not even told the general terms of the agreement with Mr. Gegauf, as appears in the next-to-the-last paragraph—the alleged conspirator being Mr. Vigorelli.

It says:

> "Mr. Vigorelli was told"—I mean he was told in general but not specifically——
>
> "Mr. Vigorelli was told in very general terms of the agreement with Mr. Gegauf, except that we did not mention those very special ones that had to do with Singer's not building an exact one hundred per cent copy of the present Gegauf nor any of the other details except that neither party would act against the [fol. 762] other in connection with the particular patents or patent applications that were listed."

Now Mr. Vigorelli's condition is set forth in the next-to-the-last paragraph:

> "Following are some interesting sidelights that came out of the talks with Mr. Vigorelli. He now has no dealer in the United States."

Further down it says:

> "This, of course, leaves Mr. Vigorelli in quite a bad spot. He has already reduced his production considerably and has let a number of employees go."

Mr. Vigorelli, by the way, is a man who sent into the United States only a few machines—I think approximately 400 in one year and 485 in another, and absolutely nothing in 1959—all as appears in an exhibit that we have here.

Mr. Vigorelli's machines that this whole conspiracy is alleged to be about, which was to help Vigorelli—Singer was to spend not merely thousands but hundreds of thousands of dollars in a conspiracy that was for the benefit of Mr. Vigorelli.

Mr. Vigorelli imported 472 machines in 1957, and 400 in [fol. 763] 1958, and absolutely none in 1959—and he has even discontinued the manufacture of the machine.

And while at it, I might point out Gegauf's great interest in this market. He imported 1600 machines in 1957, the year that Singer bought the patent. Singer had sold 106,341 machines.

In 1958, Gegauf imported 3,405 machines and Singer sold 151,645.

In 1959, Gegauf imported 2,150 machines and Singer sold 156,445.

Now there are 450,000 machines almost in three years, compared to a trifling 800 by Vigorelli and a mere 6,000 or 7,000 by Gegauf. And yet they would have you believe that Singer put those people on a parity and agreed to protect them, and spent hundreds of thousands of dollars in their interest—not that Singer wanted a patent to own wholly and completely and use it as it saw fit to protect its own business.

The letter of Mr. Williams that I just referred to, Defendant's Exhibit 33, further states:

> "However, it has occurred to me that before leaving London you may have some further opportunity to correspond or converse with the Gegauf people and or their attorney. If such an opportunity did present itself, [fol. 764] it might be that you could in an offhand manner advise them that Singer might encounter some difficulty in cooperating fully with their U.S. attorney."

And on the next page he says:

> "Such information imparted to Gegauf might precipitate results which would be favorable to us."

Now Government's Exhibit 28, the government points out there that Mr. Stanford writes that Singer could best handle the patent situation, and from that he goes into quite an imaginative flight of fancy rather than the obvious thing that it did do—and it referred back, just as your Honor pointed out, to the previous situation.

This letter further states—and I do not think this was pointed out—"We wrote Gegauf today telling of the dual relation of his U. S. attorney."

And down below:

> "This suggestion, with the U. S. attorney situation is pressure in the right direction."

Now, your Honor, here we have a picture of Singer apparently conspiring to get two co-conspirators—this was, [fol. 765] according to them, a little backstage deal with Vigorelli, looking for a means of getting to a co-conspirator and talking to him about a conspiracy, and they had this pressure that Singer bears, to bring this about—and don't even mention it. The picture is quite clear that there was no conspiracy at a time when Singer had to find some way of getting an approach to him to even discuss the probability or the possibility of his transferring his patent application.

On June 11, 1956, two months after the license agreement had been signed, Mr. Waterman wrote—and this is Government's Exhibit 30—when he was in Milan and he had a con-

ference with Vigorelli and his attorneys—and this letter, by the way, was written to Mr. Baumann, Singer's agent. Mr. Waterman says:

> "During this conference, the idea was put forward, I believe, by Mr. Vigorelli's attorney, that it would be advantageous to all parties if Singer owned the Gegauf United States patent application No. 358,377."

It says:

> "It was thought that it would be best if the suggestion that Gegauf transfer his patent application to Singer come to Mr. Gegauf from Vigorelli or some other [fol. 766] source than Singer. It was left that Mr. Marcello Magnoni, Mr. Vigorelli's patent attorney, would write or otherwise convey to Mr. Gegauf's patent attorneys in Zurich the suggestion that the transfer be made, and, at the same time, set forth its advantages to all parties."

Now the government is not satisfied with the advantages that exist in licensees having a strong owner of a patent. They concoct I do not know how many other advantages with reference to a different patent, and I will call your attention to the fact that up to this time no mention has been made by Singer or anybody else of other patents. Up to this time they have been talking solely about the acquisition of the Gegauf patent, and the use of it by Singer because it could better enforce it.

Mr. Elkins said that this letter asked the representatives to find out what approach had been undertaken. It did not ask what approach had been undertaken. It asked a simple question, whether the particular question that was to be asked had been asked.

A conference was coming up and he wanted to know whether the suggestion was made that Gegauf transfer his [fol. 767] application because Singer wanted to know whether this suggestion had been made before they started talking with Gegauf in June.

On June 19th word was received as to what Magnoni said, and in dealing with this letter I want to call attention to the fact that I object to this letter as establishing anything sub-

stantive under the hearsay rule—and here is probably as extreme an example of the use of hearsay that is used as can possibly be imagined.

We are dealing with an Italian attorney, who, of course, speaks Italian, who in turn deals with a Swiss attorney, who in turn speaks either French or German——

The Court: Some of them speak Italian. Some of them speak all three, including English.

Mr. Pettit: —and they in turn were talking to Gegauf, who speaks only German. So the messages would go from the Italian-speaking Italian to the German- or French-speaking —in all probability—attorneys in Switzerland, to the German-speaking Gegauf, and back comes the message, then it is translated in our office.

[fol. 768] He states, that is, Mr. Magnoni states—and I would like to notice the heading of this letter "Subject: Interfering Patents Singer Gegauf Vigorelli"—that was not read by the government. It shows clearly that he was referring to Singer-Gegauf, and why he put in Vigorelli I do not know because there is not the slightest indication any place in the record that Vigorelli was involved in this in any respect. If you will forget Vigorelli for a moment, you will find that this letter fits in with the Singer-Gegauf situation:

> "With regard to the question of the advantage of the American Singer Company being in possession of the different patents which might be useful in defense of Singer Sewing machines with multiple cams, the writer has lately had the opportunity of talking to the Patent Attorneys of Mr. F. Gegauf on a number of occasions and the conversations have developed in such a way that the possibility and advantage that the Gegauf patent application in the States can be assigned to Singer could be considered in a definite way."

Now your Honor, that was not a reference to any and all patents that might be useful in the United States. By the [fol. 769] very headnote it was limited to the "Interfering Patents".

Now there were only two interfering patents that were being discussed by Singer, and that was Harris and Gegauf, and the only patent that we think they were talking of acquiring at this stage was the Gegauf application, and I would

like to call your Honor's attention at this point to the fact that we were dealing throughout this period, and all the way through to December, 1957, with a single application. Mr. Elkins never failed to say "applications", even though the letter following it uses the singular. Here and there a letter does refer to "applications", but this shows right thereafter that it meant "application", and it had been "application" because the simple fact was only one application was pending.

Mr. Elkins: Excuse me, Mr. Pettit, that document as just read by opposing counsel was not read quite accurately, and I do not suppose it makes much difference but it says "patents which might be useful in defense of sewing machine". I believe opposing counsel put the word "Singer" in before "sewing machines".

Mr. Pettit: I wouldn't say the contrary—that becomes such a habit—they are almost synonymous!

[fol. 770] What I would like to call attention to, your Honor, is on December 31, 1953, the United States Government Patent Examiner required Gegauf to make an election to ascertain that there were two separate ideas involved. This appears in one of the government's exhibits, 175, at pages 31 and 32—the last paragraph on page 31 and the first paragraph on the top of page 32.

On June 25, 1954, the attorney for Gegauf made a reply—elected one, and of course elected to keep in this one application the claim relating to the Gegauf mechanism of a stack of cams and a single follower, not the stack of cams with separate followers—and in doing so he protested that the ruling was not proper, but nevertheless proceeded. That will be found on pages 33 to 43, and specifically on page 41?

This, from that point on, remained an application covering the 401 Gegauf-Vigorelli type of mechanism, or, in other words, the stack of cams and a single follower.

Mr. Elkins: If your Honor please, I think that might be misleading.

Mr. Pettit: I did not interrupt you.

Mr. Elkins: This 401 machine is entirely distinct from the [fol. 771] Gegauf machine. They are different machines.

The Court: Suppose, Mr. Elkins, you make a little note of it——

Mr. Elkins: I am sorry.

The Court: It will be less disconcerting and less provocative to Mr. Pettit. It might be more practical, too.

Mr. Pettit: Now this is important, because the government is always talking about intent and attitude, and it is quite important to realize that all through these negotiations the intent and the attitude was that they were dealing with the Gegauf No. 1 patent application. The Gegauf No. 2 application came up a year later and under quite different circumstances—in fact, I will mention the circumstances that make this crystal clear that what I am saying is correct.

[fol. 772] At a meeting young Gegauf, Jr. became very excited. Government's Exhibit 62, page 6. This is a memorandum written by Mr. Stanford in December, 1957:

> "Young Mr. Gegauf became quite excited over the fact that Mr. Willie agreed with us that Singer did have full rights under both the original and divisional patent applications..."

He had before strenuously raised the point that the negotiations had been conducted on the basis of the material that was in conflict between Singer and Gegauf, namely, the stack of cams with the single follower. He claimed that Singer had no rights under the cross-license agreement with respect to the second idea contained in there and that they had all along been talking only in those terms.

This shows that it took the attorney for Mr. Gegauf to quiet him down and tell him that under the license agreement as drawn Singer had license rights under the second idea as well as under the first, but this, your Honor, comes in December of 1957 and I use it only to show that all during the period up to the time that they got into a dispute as to whether the license agreement covered the second idea in the patent all the discussions had been with respect to the [fol. 773] one mechanism.

I understand that this is October instead of December. I will straighten that out. My own memory was that it was October, and I was told it was the December conference. My memory is that it was October, 1957, but I will check which it was. In any event, it was late in 1957.

On September 3rd Gegauf wrote to Singer following Gegauf, Jr.'s conference with Singer here in New York in the summer of 1956. This letter is cited by the government

to show that there must have been some talk going on quite apart from Singer's desire to acquire the patent because it thought it could enforce it better. It does this because Gegauf writes back:

> "We agree that something should be done against Japanese competition in your country and maybe South America and are, therefore, looking forward to your reply."

No one knows what is meant by "South America." There is not any indication of any talk or discussion involved. Whether this is Mr. Gegauf's way of stating what he thinks ought to be done I don't think anybody can know. He certainly doesn't say that he agrees with Singer, and there [fol. 774] certainly is no indication that Singer made any agreement whatever about it. It is a rather ambiguous letter written by a man from Switzerland and I think does nothing to establish that any kind of an agreement was made. In fact, they merely talked about the fact that they wanted to acquire the patent and that they could enforce it better.

On September 7th a letter was written to Mr. Gegauf by Mr. Waterman. This is Government's Exhibit 35. The government points out that it says "We feel arrangement can be equally advantageous to both." But, when you are trying to set up a conference, talk with someone, I cannot see how you talk on any basis other than that whatever would come out of it would be advantageous to both. You certainly would not come out and say it would be advantageous to us but not to you or it would be less advantageous to you. This letter goes on to say:

> "Mr. Stanford does feel that if he has had the opportunity before we proceed to Europe this time, to know just what has been the patent action in Washington with respect to both your and our applications, he will be in a better position to discuss intelligently affairs of [fol. 775] mutual advantage to us, and to have prepared a draft which might be the basis for an agreement concerning our respective applications."

That agreement turned out to be the assignment that we are discussing.

The next letter is a letter of September 19, 1956, again reporting on what Magnoni has said. You will note that Magnoni had fulfilled any function that he possibly had back some months before. There had been no communications with him in the meantime. This was a quite voluntary letter, unsolicited in any respect, containing matters that were no part of what he had said that he would do. Here again we object to the use of this letter to prove any single fact in it by virtue of the circumstances that exist. One example of why we should not do so is the opening statement that Mr. Magnoni is reported to have made:

> "Mr. Gegauf is today effectively willing to transfer his patent application in the U.S. to Singer without regard or with little regard to the financial side of the matter."

Your Honor, the date of this is September 19, 1956. The conference with Mr. Gegauf that followed was just four days later. That was the conference at which Mr. Gegauf asked [fol. 776] a million dollars and finally, after conversation, came down to a quarter of a million dollars. That is the conference that broke up completely with no agreement. Here is Mr. Magnoni reporting four days before that Gegauf is willing to transfer his patent without regard or with little regard to the financial side of the matter. He further says, at the bottom of the page:

> "Mr. Gegauf is particularly and prevailingly interested to have a not objectionable patent in Germany, and for such end he made informally known to Mr. Vigorelli that the withdrawing of the Vigorelli application in the U.S. would be greatly appreciated, to prevent the issuance of a printed patent wherein the fact that the Van Tuyl patent exists will be made known to third parties. Informally, through Mr. Magnoni, Vigorelli agreed with the withdrawing of his U.S. application on condition that any other interested party (say, unnamedly, Singer) agrees too, and that another application (say, consequently, the Gegauf one) might be put

at disposal of said other interested party in lieu of the Vigorelli one, . . .''

Now, how much can be placed on that? How much con- [fol. 777] fidence can be placed on that? How much confidence is shown by the fact that Vigorelli had, more than nine months before, abandoned any claim that he had in his U.S. patent that related to the stack of cams and a single follower? He had no claim pending even in the United States. The only claim that he had left was with respect to taking information from two cams at the same time with a single follower. He had nothing whatever that would have interested Singer. Singer's Harris patent had Vigorelli beaten on the single follower. Singer's Johnson patent had Vigorelli beaten on taking information from two cams. And, as I say, Vigorelli had, already nine months before, to abandon his claim because he could not meet the suggestion of interference offered by the Patent Office.

How anyone could have thought that the Gegauf patent could take the place of the Vigorelli one, I don't know. That would mean a good patent taking the place of something that is utterly useless and that no one had ever discussed. No one had ever conceived of the ideas they might get. Vigorelli was simply beaten wholly and completely in the United States by Singer and obtained a license from Singer to sell his product in the United States so that Singer could [fol. 778] get a license to sell its product in foreign countries.

Mr. Magnoni, on the following page, says:

> "Mr. Magnoni pointed out that Vigorelli would consequently drop any direct means adapted to protect his machines in the U.S., . . .''

Mr. Vigorelli had no direct means to protect his machines in the United States. Then he says:

> "but he is quite sure that Singer will take care of the protection of the machines of the general type of interest, by making use of the owned Harris and Geganf patents.''

Well, that shows two things: first, it isn't a man speaking that has any agreement that Singer would take care of his

machines. Second, it shows pretty clearly that Magnoni was in fact talking about, and all along had been talking about, the Harris and the Gegauf patents, because it ends "by making use of the owned Harris and Gegauf patents."

I referred to the suggested interference that had been made to Vigorelli. This appears from Defendant's Exhibit 58 dated January 19, 1956. It sets forth a claim which was in fact taken from the Harris application, a claim which had been drawn by Singer. It says:

> "The following claim found allowable, is suggested [fol. 779] for the purpose of interference. Applicant submit same by February 24, 1956, under the provisions of Rule 203. In making this claim applicant is required to overcome the filing date (Rule 131) of the Harris patent, of record, which shows the construction set forth in the claim; failure to do so will be considered a disclaimer of the subject matter involved:"

Here is a plain statement that Vigorelli could get into interference if he could overcome the Harris filing date but that he had to overcome the Harris filing date. His attorney wrote to his patent attorney in Italy under date of January 23, 1956, Defendant's Exhibit 59; and February 6, 1956, Defendant's Exhibit 60. He points out in the fourth paragraph of the letter as follows:

> "The Examiner requires the inventor to overcome the filing date of the Harris patent. This patent was filed on June 9, 1952, that is prior to the filing date of the corresponding foreign applications which, according to the oath, were filed in Italy on January 28, 1953, and on September 29, 1953, and in Argentina on May 13, 1953."

This letter, of course, was referring to Vigorelli's filing [fol. 780] dates. Continuing:

> "Consequently, we cannot rely on the filing dates of the corresponding foreign applications, and the only way to overcome the filing date of the Harris patent is to prove that the invention, as set forth in the proposed claim, was introduced into the United States prior to

the filing date of the Harris patent, that is prior to June 9, 1952."

On the next page it continues:

"If you have proof of such prior introduction into the United States, which may have been in the form of a machine delivered to the United States, or any other disclosure in the United States, please inform me immediately by airmail of the facts involved, and I will prepare a suitable affidavit to the statements set forth in your reply and mail it to you so that the inventor may sign it.

Please note that such affidavit and an amendment submitting the proposed claim must be filed at the Patent Office before: February 24, 1956."

He supplements that advice by some rather interesting advice which I think is relevant to this whole case. He says he has further considered the contents of this letter of [fol. 781] January 23rd and that he wishes to inform Vigorelli that this matter seems to be much more serious with Vigorelli than he had realized at the beginning. He then states:

"The fact is that the question of whether we win the probable interference or not and obtain a patent is of negligible importance compared with the fact that if a patent is issued to a third party with the interference claim which the Examiner proposed, then Vigorelli will probably be barred—by such claim—from importing his machines to the U.S."

Your Honor, it is interesting to see these negotiators having just the same attitude but, of course, in reverse. Just as Singer's predominant worry was whether it was going to be barred, so, here, Vigorelli's attorney is writing to him and calling his attention to the fact that the great problem is the danger of being barred from selling his machines, a factor that controlled Singer from beginning to end in its own negotiations. The attorney continues:

"I have carefully gone over the interference claim and, after due consideration of the entire situation, my

opinion is that this claim clearly reads on the Vigorelli [fol. 782] machine as it is manufactured and sold at present, and that therefore issuance of a patent with this claim to a third party would be extremely dangerous to your clients' further business in the U.S."

Then on the next page he points out Mr. Vigorelli's rights in interference proceedings:

"Please note that if the present application were involved in interference proceedings with the other application, we would be entitled to prove—during such interference proceedings—the non-patentability of the interference claim. Although we might—by such procedure—at least partly 'cut our own throats,' still it might be worthwhile doing it if we could, thereby, eliminate the possibility of grant of a patent on the interfering application.

"However, in order to be able to do this, it would be absolutely necessary for the present application to be involved in an interference, and this is only possible under the conditions outlined in my letter of January 23, 1956—namely, if the inventor is entitled to allege, under oath, that he had at least disclosed to somebody [fol. 783] in the U.S. before June 9, 1952, the subject matter set forth in the proposed interference claim."

Now, of course, on the basis of that advice Mr. Vigorelli did nothing by February 24th for the simple reason that there was nothing that he could do. He was not even entitled to get into an interference because his priority date was not near enough to that of the Harris patent in order to let him get an interference with it.

We come now to the letter of October 9, 1956, which is Government's Exhibit 37, a letter to Dr. Lande by our Patent Department. It says:

"We conferred with Mr. Gegauf and quite an array of the top management of the Bernina Company relative to the Gegauf United States patent application, and found he placed great importance on the claims which he expected to obtain in the United States.

"In fact he wanted a million dollars for the applica-

tion. After a lengthy conversation he finally intimated that he would be willing to accept $250,000. As this sum was many times more than we would consider paying for this patent application we ended the negotiations [fol. 784] on a friendly basis."

Now, your Honor, that letter clearly means what it says, "we ended the negotiations," and they ended them for the very simple reason that the man was asking for $250,000, many times more than they were willing to pay.

Mr. Elkins, in speaking of this letter, says that the letter indicates there was a discussion between Singer and Vigorelli. I don't know whether that was a slip of the tongue and whether he meant Gegauf, but at least it says Vigorelli. That certainly is not a fact. I think that probably he intended to say Gegauf but he will have to speak for himself on that.

He further said:

"and that no agreement relative to the assignment of the Gegauf patent to Singer was made."

Well, that is a rather modest statement, to say that no agreement was made. The letter shows that no agreement could be made and that the negotiations were terminated.

He refers to a later letter saying that the parties agreed that they would defer any further negotiations until the patent proceeded in the United States Patent Office. Here is a letter written just about the time of the conference by a man [fol. 785] who attended it, and there is not the slightest indication in it of any postponement or deferment of anything, and when we come to a letter that he writes later you will find that the subsequent letter, when he wants again to try to take up negotiations with Mr. Gegauf, clearly indicates no such idea of a postponement of a discussion with respect to the purchase of the patent or, for that matter, a postponement of any other discussions.

The government marked as its exhibits Government's Exhibits 38, 39, 40, 41 and 42. It makes very little use of them, and I think you will see why. It does feel that it has

to say something about it, and it groups five of them together and reads out one little paragraph:

> "Our agreement provides that this interference is to be settled in accordance with the patent laws of the United States."

I would like to pay a little more attention to them. On October 22, 1956, Mr. Stanford wrote to Mr. Waterman:

> "Previous to our recent trip abroad the United States Patent Office declared an interference between our Carl Harris U.S. patent application and that of Fritz Gegauf. We have heard nothing from Gegauf or his U.S. attor- [fol. 786] neys concerning this interference since our recent trip."

The next paragraph commences:

> "You will recall that under our Singer-Gegauf agreement it is incumbent upon both parties to settle this interference in accordance with the patent laws of the United States."

Now, your Honor, this is the first of a series of these statements. This one, as you will note, was written to Mr. Waterman, the vice president of the Singer Company. You will find that the same statement is made in letters to Mr. Gegauf, in letters to Mr. Vigorelli, in letters to Mr. Gegauf's attorneys, in letters to Mr. Vigorelli's attorney, and, in fact, on almost every occasion that Singer has to write with reference to this it expresses this thought, that it is incumbent upon both parties to settle this interference in accordance with the patent laws of the United States. At the bottom of the page it says:

> "It may be that Gegauf will advise his United States attorneys to contact us for the purpose of settling the present interference, but on the other hand, Gegauf may extend to us another plan for disposing of his United [fol. 787] States patent rights. Enclosed is a draft of a letter which we propose to send to Gegauf. We shall take no further action in this matter until we have heard

from you as to whether you approve of this proposed action."

In his proposed letter, which is Government's Exhibit 39 addressed to Mr. Fritz Gegauf, it is stated:

> "As you know, the United States Patent Office has declared an interference between your United States patent application and Singer's patent application relating to ornamental stitch zigzag sewing machine. Such an interference is declared by the Patent Office to determine which of the conflicting applicants is to be awarded priority with respect to the subject matter common to the conflicting applications.
>
> "Our agreement provides that this interference is to be settled in accordance with the patent laws of the United States."

He goes on to show that the interference proceedings may be time consuming, may be costly. He says, "it would appear that it would be advantageous for us to settle the interference between ourselves rather than to continue the proceed- [fol. 788] ing and rely upon the United States Patent Office finally to award a priority."

He then says, and I quote: "On the other hand, it is most important that the interference be settled properly so that the prevailing party will ultimately be awarded a valid patent."

I don't see how it can be more clearly expressed that every concept that Singer had was that it reserved all rights and, of course, was bound to conduct any and every interference proceeding in accordance with the laws of the United States, and it expresses a thought that I gave the other day, that under no circumstances did it want a patent that was invalid. On the other hand, it says, it is most important that the interference be settled properly so that the prevailing party —not merely Singer—will ultimately be awarded a valid patent. That is not the language of someone who is looking for a way to slip something over on the Patent Office and to get an invalid patent with which to fight the gigantic cartel composed of the Japanese sewing machine industry.

The Court: Would this be an appropriate time now to take a recess for five minutes?

Mr. Pettit: Yes, your Honor.

[fol. 789] (Recess taken.)

Mr. Pettit: Your Honor, that letter continues. It says:

> "Perhaps if the United States Attorneys for both parties had a conference relative to this matter the exact procedure for terminating the interference could be readily and properly determined."

Pursuant to that advice a draft letter, a letter of such purport, was sent to Gegauf stating at the end that an interference had been declared, stating that "Our agreement provides that this interference is to be settled in accordance with the patent laws of the United States," containing the statement that "On the other hand, it is most important that the interference be settled properly so that the prevailing party will ultimately be awarded a valid patent." That letter is Government's Exhibit 41.

On September 19, 1957, Mr. Stanford wrote to Mr. Waterman, entitled "Gegauf United States patent.

> "Enclosed is a proposed letter to Mr. Gegauf. If you are in agreement with us that Gegauf should be approached again on this matter and approve of the letter in its present form, will you please send it on to [fol. 790] Mr. Gegauf.
>
> "It is our feeling that we have nothing to lose and much to gain by again seeking to obtain the rights in the Gegauf United States patent application."

Now, your Honor, there is no indication that anything had been postponed or that the whole conference had been deferred until a later date. This is a man who says: Having lost once before, do we have anything to lose by trying again?

Pursuant to that, the draft letter was enclosed which calls Gegauf's attention to the fact "that under the terms of our patent agreement the interference between your United States application No. 358,377 and our United States Harris Reissue application No. 516,059 has been settled."

That, as a matter of fact, had been settled some time

before, at a time when all negotiations with Gegauf were terminated and there was no thought or discussion, as far as anything in the record will indicate, of them being resumed. The letter continues:

> "We have now been notified by the United States Patent Office that our United States Harris application, which was filed some seven days after the filing of your [fol. 791] application, is ready to be issued as a patent. Furthermore, we anticipate within the near future to have issued to us several other United States patents relating to ornamental stitch sewing machine. We presume that in a short time a United States patent will be granted upon your application."

Now, your Honor, that paragraph, according to my reading, is nothing but an excuse to talk to Mr. Gegauf. It points out the fact that Singer has been notified that its Harris application is ready to be issued as a patent. It also expected other patents relating to the same matter. It was therefore logical for it to assume that the Gegauf patent would be issued at about the same time. It was using this fact as an excuse to get in touch with Gagauf and talk to him. The patents that it was expecting, of course, were patents that related to the 401 machine. It was also expecting the Perla and the United States applications which had not yet, I believe, ripened into a patent. Now it goes on to say in this proposed letter:

> [fol. 792] "You are no doubt aware that recently the many Japanese sewing machine manufacturers have brought out a large variety of ornamental stitch machines which would appear to come within the terms of claims which may be awarded in the United States with respect of the above Gegauf and Singer patents."

Then it says on the next page:

> "You may agree with us that under the terms of our present agreement neither party is in a position effectively to protect itself through patents in the United States with respect to this threatened competition, particularly when the competing machines are copies after both Bernina and Singer models."

With respect to the former paragraph, Mr. Elkins made a great point that it had been changed to read "infringing manufacturers" and drew many inferences from it. The inference that I draw from it is that the man was almost clairvoyant. He saw that he did not want to limit himself to dealing with Gegauf on the basis of the only rights that Singer would get, which would be to restrict a certain group, and you will remember that Gegauf himself tried to hold [fol. 793] out with respect to certain European manufacturers. It would have been a very bad beginning and a very bad approach to indicate in any way to Mr. Gegauf that Singer was interested in a half-ownership or a partial-ownership in this patent that it wanted to acquire from him. The change, I think, was made for the express purpose of having it go to Gegauf. Definitely and clearly it was Singer who was talking and was talking about infringing manufacturers, and I think it is just as well that he did because they had to bargain with him quite a good deal to get him to hold down the European manufacturers that he wanted to be able to license merely to Pfaff outside, of course, of Vigorelli who was entitled to the license in any event.

With respect to neither party being in a position effectively to protect itself through patents in the United States, that statement is just completely true. It is true by virtue of the fact that Gegauf was 3,000 miles away. He had none of the finances and none of the resources that would let him enforce his patent. Therefore he was in no position to effectively protect himself through his patent.

[fol. 794] Singer was in no position to protect itself for quite a different reason. The reason was that, with Gegauf getting the coverage of this stack of cams and the single follower in its patent, Singer would have nothing with which to [illegible] its rights. It would not have any patent that would in any respect be effective to protect its 401 machine against people bringing in the 401 multiple cam with the single follower. It could keep a second follower from being put on, but it could not stop the importation of multiple-cam machines with a follower to select any cam you wanted. Therefore it is perfectly correct to say that each of these parties was as of that time utterly helpless to protect itself, and I don't believe that anyone could imagine Gegauf conducting the proceedings that Singer is conducting and de-

fending itself as Singer is defending itself and continuing with the operation.

The letter that was written goes ahead as originally designed to point out that pursuant to the agreement the interference between the United States application of Gegauf and the United States Harris Reissue application was settled. It then puts in as a third paragraph the following:

> "When I had the pleasure of meeting you last fall [fol. 795] we had some discussion relative to the procedures that might be followed to enforce the patents referred to in the first paragraph of this letter . . ."

Now you will notice, your Honor, that was not a whole group of patents that could be of interest in enforcing various patents against competitors. That is a specific reference to the two patent applications. It goes ahead:

> ". . . when issued, against infringing manufacturers who primarily are manufacturers in other countries"——

It didn't say, your Honor, in another country. Japanese are only in one country. This says "who are manufacturers in other countries seeking markets in the United States, and more and more throughout the entire world."

He then goes ahead to repeat the sentence at the bottom: "I think you will agree with me that neither one of us alone can protect himself most effectively." Then comes the line that Mr. Elkins would use to completely negate everything that has been written by Mr. Stanford, even an item written at the time that it occurred. He says that this sentence [fol. 796] means that they had deferred action with respect to the possible purchase of the patent application. That he goes over time after time. This sentence says: "In our discussion we deferred any further action until the applications might have progressed further in the Patent Office."

But from the letter it is perfectly apparent that what they deferred discussing, if by chance they did in fact defer anything, was the method of enforcing the patents and the problems of enforcing their respective patents.

Mr. Elkins, if I understood him correctly, says they

couldn't possibly have been talking along that line because any agreement about enforcement of the patents would be illegal. So he says we couldn't have done that and then claims that we did something else instead that was even more illegal.

I don't think that an argument is feasible, based on the assumption that they could not have been talking about means of enforcing their respective patents. There is plenty of room for discussion between mutual licensees and cross-licensees of methods and procedures and steps that might be taken or should be taken with respect to enforcement without violating the law. There are, of course, agreements that [fol. 797] could be made that do violate the law, but no one can tell me that there is no range of conversation available for two cross-licensees as to the problems they have with people infringing their patents.

This is not standing alone; this same philosophy of discussing the problems of enforcing their respective patents runs throughout this material. There is no question whatever that unless this was just an excuse to talk to him, which it well may have been because there is no previous indication that they had reserved anything, it was purely a talk about means of enforcing their respective patents.

Now Government's Exhibit 45 is indeed bothersome to the Government.

[fol. 798] This letter, an answer by Mr. Gegauf to the previous letter, in it Mr. Gegauf says: "Thanking you for your letter of September 12th, I am pleased to reply by return of mail that I am looking forward to your visit in October for discussion either in Zurich or Steckborn regarding the mutual enforcement of our U. S. application No. 358,377 and the Harris Reissue against infringing products of the foreign manufacturers."

Now this, the "foreign manufacturers" has been a psychological imposition on Mr. Gegauf, according to the government. What it says is—"We would like to note your Honor that Mr. Waterman, due to his oblique references to the Japanese in the previous exhibit"—and by that he is referring to 'foreign manufacturers'—"now has Mr. Gegauf of Switzerland referring to the Japanese manufacturers as 'foreign manufacturers'. "Poor Mr. Gegauf. To take advantage of him that way.

He reads the letter that refers to "foreign manufacturers". He replies in terms, in talking about "mutual enforcement" against "foreign manufacturers," and the government doesn't have the slightest idea what he is talking about, they think that he is in a trance, under this oblique reference made by Mr. Waterman.

[fol. 799] Now I think he replied that way because Mr. Waterman had not made an oblique reference to the Japanese but because he had made a direct reference to "foreign manufacturers"—a reference that Mr. Gegauf could read and clearly understand, and he in turn wrote back in just those terms.

In that last letter Mr. Gegauf refers to "mutual enforcement". I do not think anybody can know what Mr. Gegauf meant by "mutual enforcement". There is no possible way of mutually enforcing the separate patents. I think it is a term that he probably uses to mean respective or—I don't know what, but clearly he could not have meant the word "mutual"—and Mr. Elkins says that if we did not accept that word, we should have replied. He says, with reference to the next letter, Government's Exhibit 46, dated September 25, 1957—his only point with respect to that letter is that if we did not think the "foreign manufacturers" meant the Japanese, and "mutual enforcement" did not mean mutual enforcement, we should have written back. I see no occasion to write back because of the most obvious use of the same term that we used so far as "foreign manufacturers" are concerned. I see no reason to write back because a foreigner used the term "mutual enforcement" with respect to the [fol. 800] patents that we are going to have a conference with him about anyway—problems of enforcing our respective patents—that is the very thing that Mr. Waterman wanted the conference about, he said, and I do not see why he needed to have any explaining beforehand.

On September 23, 1957, the patent department, Mr. Stanford, wrote a letter to Mr. Waterman—and the government says that so far as the government is concerned, it is not of any significance. This letter inclosed specimen documents of agreements—two proposed forms of agreement and one assignment. It shows exactly what Singer was thinking

about when it was on the way to the conference. This is what it says:

> "The enclosed specimen documents have been prepared for your use in the event that Gegauf should be willing to sell to Singer its above-identified United States application which forms the subject of the present license between Singer and Gegauf."

It goes on to say "Agreement (1) is suggested for use in the event that Gegauf should be willing to sell us the application for a single lump-sum payment."

[fol. 801] Agreement No. 1, your Honor, is Defendant's Exhibit 36 and is also marked S-8.

This agreement provides for an assignment and a license back. It has no agreement about licensing or not licensing, or enforcement against the Japanese or not enforcement against the Japanese. It is a simple assignment with a license back.

With reference to this, Mr. Stanford says:

> "This agreement has the advantage of providing Singer with an irrevocable title to the subject application and, furthermore, under this agreement it would not be incumbent upon Singer to deal any further with Gegauf in connection with this general subject."

That is the form of agreement that Singer strove for. That is the form of agreement that Singer got—one that would let it not have to deal with Gegauf any further on these matters.

On October 17th, Mr. Waterman wrote to Mr. Lightner, which is Government's Exhibit 49. The government states that the only significance is that the patent attorney referred to Kirker—and that negotiations in October 1957 have not been completed, and that Mr. Waterman is now in Zurich, in Switzerland, and he is going to Frankfort, [fol. 802] and that he will hear later on from Mr. Kirker.

The letter says:

> "Yesterday Mr. Stanford and I met with the Gegauf people and discussed from mid-morning until early evening the matter of the assignment of the Gegauf basic

U. S. patent on its automatic cam-block zigzag machine."

You will notice, your Honor, this is still talking about the patent or the assignment of the automatic cam-block zigzag machine.

"Such assignment like others that we have concluded will give Singer complete ownership of the patent (or as it is the case in this instance, patent application) and in return will license Gegauf to build and to sell his machines just as he is now doing."

I do not see why the government should attach great significance to this letter. Here is the patent attorney writing to the president of the company reporting what he is expecting to get, and he said it will give Singer complete ownership of the patent. No attorney in good faith—no negotiator can be reporting back to the president of the company that we are getting complete title if we have all [fol. 803] kinds of strings outstanding under the assignment. We do not have complete title if we cannot license or we cannot stop whomever we want to stop that is not specifically licensed. Yet here is the statement saying it is complete, and what it wanted and what it hoped to get.

He says that he tried to treat the subject matter as one that was not overly important to Singer but one that should be of equal value to both. He says "Naturally with the language barrier there is always some difficulty in bringing out all points, and it is not other than normal that there may be suspicion on the side of the smaller company to be allayed. I believe we were successful in doing this."

He mistakenly reports—at least he thinks he is reporting correctly but as it turned out it was not correct—that the price agreed upon was $40,000. He says, "There was considerable discussion in reaching this figure. It comprehends the outright purchase by Singer of their existing patent application with all its divisions."

So far as I know, this is the first reference to the fact that even the application had divisions—and this is October 17, 1957.

[fol. 804] "Their patent lawyer and ours are to get together shortly, and as it now stands, to proceed to

finalize the terms of the agreement in accordance with our discussion of yesterday."

Well, it turned out not to be that simple.

With reference to Mr. Kirker, who was Singer's counsel in Switzerland, and to whom the various forms of agreement that we wanted signed had been turned over, there is a telegram—Government's Exhibit 50 with a cablegram from Mr. Waterman to Mr. Stanford. He says:

"Kirker advises of latest three points put forward"—that means put forth by Gegauf—"first 125000 single or 25000 yearly latter for three years certain but believes half these figures might be accepted."

Your Honor, we are down a long way in a year and a half—we are down to $125,000 after an entire year's time, when he predicted within four days they were ready to give it for nothing. Well, at the end of the year it is down to $125,000.

"Second asks exceptions Pfaff, Vigorelli Necchi"—that means that he wanted to be able to license Pfaff, Vigorelli and Necchi.

[fol. 805] "Third wishes divisional claim not included as stated intends licensing this to some other interested European company."

Your Honor, we have now gotten to the point, October 17, and October 24, where they are first starting to *take* about the divisional application which ultimately turns out to be Gegauf patent No. 2.

The cable says:

"Advised Kirker to pass word to Willi without making any comment on first two that third will almost surely make agreement impossible as we all along were discussing application including divisions and possibility of changes."

Here is a statement, your Honor, giving as an excuse that we were all along discussing, when all along there had been no discussion whatever, and it is a typical kind of excuse that was being formulated at the time in order to

get Gegauf to go ahead and give this second application, because by this time they had already made their cross-license agreement with Messerschmitt—that is, Singer had; but they still give Gegauf no sensible reason as to why the division has to be included.

The Court: Would this be a convenient place to stop [fol. 805a] now?

Mr. Pettit: Yes, sir.

The Court: We will recess until a quarter after two.

(Recess until 2:15 o'clock p.m.)

[fol. 806] Afternoon Session

Mr. Pettit: Government's Exhibit 51 is a cable from Mr. Stanford to Mr. Waterman. This cable states:

> "Value of Gegauf patent to Singer greatly decreases when other people are licensed."

Now there are two things significant about that sentence, your Honor. One is the obvious mistake in asserting, that Singer was stating that it did not want to acquire a patent and have numerous licenses outstanding. Its value stated simply that it decreases with other people being licensed.

The second is that the other people being referred to were Europeans.

This was in direct response to a suggestion that Mr. Gegauf might have some Europeans that he wanted to license. Therefore it is perfectly clear that they were wanting the absence of licenses, and they wanted the absence of licenses to Europeans.

"However we understand Vigorelli is necessary licensee," the cable goes on to say.

That, of course, is a merely recognized fact because he [fol. 807] was already licensed by both parties, therefore he was a man that had to be protected by both parties. He had his license, and that is all there was to that.

The telegram then says:

> "Divisional claim must be included."

I call your attention to the fact once more than no reason is stated.

Government's Exhibit 53 is a letter dated October 30, 1957 from Mr. Stanford to Mr. Kirker——

I apparently skipped one, your Honor, and I will start with Government's Exhibit 52, which is a letter from Kirker to Mr. Stanford, dated October 25, 1957. This letter deals with the information that was conveyed by the telegram, and Mr. Stanford's reply. It says—and Mr. Elkins read this paragraph, I believe——

> "Gegauf filed some time ago a divisional application for a part of the subject matter of the above U. S. patent application"——

and I think it turned out that that was a mistake, but that is what he says.

> "The contemplated agreement must relate—according to Mr. Geogauf's point of view—to the basic [fol. 808] application only, in its present form. In other words, the divisional application will not be included in the agreement. We replied to Mr. Willi that certainly, such a condition will represent a serious obstacle to reaching an agreement."

He points out later that he had been in touch with Mr. Waterman, and it is perfectly apparent that he was calling for Mr. Waterman's instructions.

In one paragraph on that page he says:

> "We asked Mr. Willi why Mr. Gegauf wished to keep for himself the original application since, at another time, Mr. Willi said that Mr. Gegauf is not very interested in said invention as regards the U.S.A. Mr. Willi answered that certain European companies are highly interested in the divisional application and that Mr. Gegauf thinks he could sell said subject matter of the divisional application to them. We replied that this represents probably a supplemental difficulty for reaching an agreement with Singer."

The Court: On this Exhibit 52, at the top of the second page of that letter, the first sentence, what significance do you place on that?

Mr. Pettit: I attach this significance: that Mr. Gegauf

[fol. 809] was wanting to retain the right to license Europeans and his method of expressing it, and the way it was ultimately expressed in the agreement, was that Singer could not sue the European companies without Gegauf's previous consent.

In other words, a license in any event is merely an obligation not to pursue and not to exclude—that is all you do by giving a person a license. Gegauf was wanting the right to license the Europeans; he mentioned in one of these letters, you will find, where he talks about being able to license one out of a list of Europeans—I don't know whether that is in this letter or not, but this is part and parcel of Mr. Gegauf's philosophy that he was retaining power in himself to choose sub-licensees. It is not a license to the people named; it was a right in Gegauf to sub-license them by the process of preventing Singer from suing, and you will notice that there was to be no consultation, no question of agreement; that to the extent it was granted, it was absolutely in Gegauf.

It imposes no obligation to grant a sub-license to any European; no obligation not to grant it, and he can grant it when he wants, for how long he wants, or for such number of machines that he wants. He, by this proposal, when the [fol. 810] agreement is signed, is in absolute control of the persons he permits to bring machines into the United States.

He had suggested that in a rather broad manner. You will notice that he says—as the second point raised by Mr. Gegauf was "that he wished to be informed when Singer intends to introduce a legal action against a European company."

There was kept in Gegauf's hands complete control as to who in Europe could import. That is exactly the same thing that Singer fought against.

I have shown you several letters to that effect before, and I will show you how they continue to struggle against it, and how right here it is followed up with the statement "It would be better to set forth the condition in another form, viz: to include in the agreement the name of the companies which Mr. Gegauf has in mind, and to restrict said condition to such companies."

The Court: But the next exhibit, the letter, No. 53, shows

or indicates an acceptance of Singer to permit Necchi, Pfaff and Vigorelli to continue to import into the United States and not to charge them with infringement of Gegauf 1.

[fol. 811] Mr. Pettit: That's correct, your Honor.

The Court: What was the reason that prompted Singer to do that?

Mr. Pettit: That was a condition that Gegauf imposed in order to grant the assignment to Singer. Singer had no choice. Gegauf was in effect saying "One of the conditions that I impose upon you is that you give me this power."

Now Kirker had said to him, "Cut it down. Name the people you are talking about."

He said he thought it would be limited to Vigorelli, Necchi and Pfaff.

Mr. Stanford wrote back saying, "If it would be limited to Necchi, Pfaff and Vigorelli we would accept it" but as the contract was finally written, Necchi was eliminated, and as to Vigorelli it was inconsequential because he already had the license, whether it was included or not. So this in effect gave Gegauf the right to license Pfaff, and that is a result of the condition imposed by Gegauf.

You will remember that the cable said that Gegauf had raised three points, and what it meant was that he had demanded that the three things be included in the agreement, if he was going to sign the agreement.

[fol. 812] The first one was that the price would be $125,000.

The second one was that he would have the Europeans to license.

The third one was that—there was a third condition that he imposed—that the divisional application——

The Court: Would be retained by him.

Mr. Pettit: Yes—would be retained by him.

Now this letter is dealing with each of those three conditions that Gegauf is imposing.

You will see that Mr. Kirker says "Apparently (but it is not absolutely sure) there are only three companies involved."

At this stage it can be seen that Singer has as its objective in striving to get complete ownership of the patent that gives it the right to exclude to everybody, including

Europeans, and that it was striving to keep down every European from having the right to get this license.

How can you have a conspiracy on that basis? Here is Singer fighting and insisting on the right to bring its actions against Europeans as well as the Japanese, and quoting again from Mr. Lightner's memorandum just before this was signed:

> [fol. 813] "If we do have to pay such a price, it is very desirable to try to get some quid pro quo for the excessive price, and this may well lie in this matter of licenses to the unnamed European manufacturers. Accordingly, we should not only endeavor to ascertain who it is that might get a license, but try to get Gegauf to refuse to give these licenses, or if he finds himself unable to do so, then to try to limit the license to a modest number of machines."

And again from the same document Mr. Lightner says:

> "In determining whether to broach this idea in the course of negotiations, it must be remembered that getting control of the patent is the main objective, with the elimination or curtailment of European import as an important but secondary objective."

Mr. Kirker in his letter then went on to say that the point raised by Gegauf was that he wanted $125,000, that the payment was to be made once and for all.

In the last paragraph Mr. Kirker reports:

> "Since in the meantime we had reported the situation by telephone to Mr. Waterman at Frankfort, we [fol. 814] added that for Singer the problem was only to buy the whole thing, i.e., the subject matter of the original basic application in the U.S.A., with all possibilities of divisions and continuations, i.e., including the divisional application filed by Gegauf, and that there was no question of making two separate agreements and two separate payments."

I read that because of the opening line, "Since in the meantime we had reported the situation by telephone to Mr. Waterman."

Apparently there is a great effort to show that Mr. Kirker was a free-lance negotiator, conducting negotiations as he might see fit. All the evidence up to this time shows that he was given the form of contract, told exactly what he could sign. Any time there was a variation he was told what he could do.

I do not think there is anything in here which makes a great deal of difference but I would like the record to be kept straight; and every document as shown, and every document you will read, shows that Kirker was operating under explicit and definite instructions as to every point involved in the negotiations. The only freedom that Mr. Kirker was given in the entire negotiation was the free-
[fol. 815] dom to try to get a price of less than the maximum amount that he could pay fixed by Singer. There was not one single term in this contract, neither the form of the contract nor any substantive provision of it, that was in Mr. Kirker's power.

In Government's Exhibit 53, which is a letter from Mr. Stanford to Mr. Kirker, Mr. Stanford thanks Mr. Kirker for his letter of October 25th and then proceeds to tell him what he can and cannot do.

In the course of this he tried to get straightened out the various applications that have been filed. There is in the course of this correspondence a little confusion as to which is in fact the divisional application that covers the second Gegauf idea—and one would have a little difficulty in following through if he doesn't realize that there is a misunderstanding running through these letters—but that is all quite immaterial, I think, from both the government's standpoint and ours. The fact is that there was to be a divisional application covering the second Gegauf patent.

The letter says on page 2:

> "The second U.S. application No. 435,832 we believe relates to the idea of having two zigzag mechanisms,
> [fol. 816] one for fancy stitching and one for the usual zigzag stitching with means for shifting at the will of the operator from one mechanism to the other. If this is the 'divisional' application to which Mr. Gegauf refers, and we are now of the opinion that it is, then we are not interested in it and it is not necessary that it be included in the proposed agreement."

Your Honor, I call your attention to that because although they are under a misapprehension in stating that they thought that was the divisional application referred to, they stated quite definitely that any divisional application having these things in it they were not interested in—and that is quite a different attitude than the government is trying to present of grabbing every single application, every single patent than can be obtained if it relates in this field in any way.

Here was in fact a separate application of Gegauf's. It was not the divisional application that we are here talking about. It was an entirely different and separate application that had already been made, whereas a divisional application had not yet been made. But this does show that [fol. 817] even though it was for fancy stitching, and it has two zigzag mechanisms, one for fancy stitching and one for the usual zigzag stitching with means for shifting at the will of the operator from one mechanism to the other, Singer was saying, "If that is what he wanted to keep, we are not interested in it."

And then he went on to say:

> "We are, however, interested in acquiring ownership to the third unfiled U. S. patent application as it discloses and claims material taken from the original U. S. application No. 358,377, about which we have all along been negotiating. Without having this, the acquisition of the original application would be of only small value to us, if any."

Another statement unsupported by any reason, unsupported by any fact, but given because they could not give the real reasons as to why they wanted this application.

Now we have already pointed out in this letter that they have accepted Necchi and Pfaff in addition to Vigorelli. They do say "we would if necessary, agree to permit Necchi and Pfaff in addition to Vigorelli to continue to sell their [fol. 818] respective machines in the United States without fear of being charged with infringement of the claims which may be allowed as a result of U. S. patent application No. 358,377."

They said "if necessary," and that is what they meant. They had already pointed out that every single license granted diminished the value of the patent to them.

Now on the price, it says on page 3:—

"If you find it necessary, we authorize you to go as high as $75,000 for the outright sale to Singer.

Then it summarizes the instructions to Mr. Kirker.

"We suggest that you again contact Mr. Willi and make known to him our position in this matter, viz.:

"Singer will accept the U. S. patent application Serial No. 358,377 as it now stands, together with any divisional applications which may be carved directly therefrom.

"Singer will not ask that Gegauf's U. S. application No. 435,832 be included in the agreement.

[fol. 819] "Singer will agree to permit Necchi, Pfaff and Vigorelli to continue to sell their respective sewing machines in the United States as far as U. S. patent application No. 358,377 is concerned.

"Singer will pay $62,500 for the outright sale of patent application No. 358,377 by Gegauf to Singer. If necessary, you are authorized to offer $75,000 for the application."

Now your Honor, those were explicit instructions. Mr. Kirker operated within them and he had no authority outside of them, and he had even previously received the precise form of the assignment.

In an endeavor to overcome the obvious limitations of our Mr. Kirker, Mr. Elkins reads from Government's Exhibit 55, a letter of November 7, 1957 to Mr. Kirker in which it is stated:

"We trust that as a result of this meeting there will be prepared a written proposal which will be acceptable to both Gegauf and Singer."

Well, I do not see how that can be an alteration of his instructions. They, of course, hoped that he would be able to carry through with it and get a contract on that [fol. 820] basis that would be satisfactory.

By letter of November 18, 1957, Kirker to Stanford, which is Government's Exhibit 56, Kirker again sets forth

the matter or items relating to discussion with Mr. Gegauf.

He says at the bottom of the page:

> "From the beginning of the interview, we saw that the position of Gegauf as regards the contemplated agreement with Singer has been considerably altered since your visit in Zurich and even since our last telephone conversation with Mr. Willi."

If this man was a conspirator he was very hard to hold as a conspirator. Here is every evidence that they were dealing at arm's length; wanting his terms, demanding his terms, and getting some of them.

On page 2 it states:

> "Mr. Gegauf explained first that he has no objection against the idea of making an agreement with Singer, in order to stop as far as possible Japanese competitors on the U. S. market but he added that such an agreement might be reached under certain conditions only, which he pointed out as follows:"

[fol. 821] I think that the government tries to attach too much significance to Gegauf's statement that he has no objection against the idea of making an agreement with Singer in order to stop as far as possible Japanese competitors.

What he means is that he has no objection, at Singer's request and instigation to turn over to it a patent which it would use and enforce and in the course of which, of course, it would affect Japanese competitors, as they are the biggest importers—and I think it means nothing else; and while he recognizes that they have an interest in getting it, he has his own terms before he is willing to get from him a patent that Singer can enforce.

I think that is borne out by the conditions that he imposes throughout, and you will later see that his primary interest is Europe, not the United States. He says so almost quite frankly in either this letter or a later letter—I think it is this one. Also, as is pointed out in another document, that Gegauf is a comparatively small operator. He does not want to expand his place. He had an abiding fear that for a company of his kind to get too large, it would be running

into difficulties and dangers; he was satisfied with his com- [fol. 822] pany, he was satisfied with the size of it. His interest was in Europe, and I think both this letter and a later document that I will read will show it, when he was saying that he had no objection to making it so that Singer could do something—he was saying exactly that "Singer has asked for that but it is going to pay me the price I want if it is in a position to enforce the patent."

Now his first condition was:

> "The agreement must contain a clear undertaking from Singer, according to which Singer will not manufacture in the U.S.A. a device according to Gegauf's applications to be involved in the agreement."

Now I think that what Gegauf meant was this "slavish copy" business, because of course it would be ridiculous to sell a patent to Singer and then say that Singer could not make a machine under it. Singer already, as pointed out, had a right to make a machine and had a complete license on it, so on that basis it would be worse off in acquiring it than it would be before. I think this should be read in the light of the obvious situation of what Gegauf meant when he said that there would be a clear undertaking that we would not manufacture the device according to [fol. 823] the Gegauf application, similar to Gegauf's machine—"slavish copy" was the ultimate wording.

> "(b) Gegauf would retain the right to grant a license to a European company"—you will notice this is a little different angle; this is not the same as before—"Gegauf would retain the right to grant a license to a European company if such a company asks for a license for the invention object of the new application just about to be filed by Mr. Strauss (Mr. Gegauf explained that it is in this new application that the idea you are interested in is lying, and that it is precisely in said idea that it may be some European companies will be interested too. The solution on this point would be that the free license Singer grants to Bernina includes the right for Bernina to grant a sub-license to one European company belonging to a list of European companies to be defined)."

Now whether that means one at a time or whether you will get a whole list and you can only use it once, or whether you can have one in effect from time to time, as [fol. 824] long as it is someone, I don't know, but I also think it is not very material. The only point is to show that Gegauf was the one who wanted to preserve various rights to license Europeans

Then it goes on to say that Mr. Gegauf also asks for $125,000 for selling his application, and a new application to be filed.

You will notice it refers throughout here to "the new application to be filed," and it was so late in the filing, your Honor, that when the agreement was signed it referred to the original application and then it referred to "a divisional application which has been or is about to be filed."

It was so late in filing that when they signed the agreement they did not even know whether the divisional application had been made.

[fol. 825] This was sales talk. He believes that his machine was wonderful. He believes that his patent was very good. The government takes as law and as absolute fact that the valuation of its patent is fixed and determined beyond question, as being of great value—possibly a million dollars, possibly the 750 that was thrown in in order to give him advantages. Certainly it shows because the seller said so, that it was clearly worth $125,000.

You can get professional appraisers—you can put three or four on the stand and we won't take their word as final; but here it is absolutely final because the owner said so, in a bargaining session.

I think you cannot appraise the value of a patent by what a man says its value is at the moment he is trying to sell it—or really at the moment when someone else is trying to buy it.

There is a little sidelight on that at the bottom of page 2. It says "We"—meaning Mr. Kirker—"were somewhat embarrassed by such a declaration and by the affirmation of Mr. Gegauf according to which Mr. Willi was of the opinion that $125,000 was not sufficient. In fact, as we wrote before, Mr. Willi told us on the telephone some

[fol. 826] time ago that it was very likely that Mr. Gegauf would reduce considerably his request for $125,000 since he had put such a high amount in the discussion for counterbalancing Singer's offer of $40,000, which he considered as a minimum."

As to how good Mr. Kirker's estimate of this was, we can turn to one of his statements here later when he says he thinks "We can buy it for $80,000 or $90,000." In dealing with this price situation, showing his own limitations, Mr. Kirker writes:

"Owing to this change in the position, we felt it impossible to present as a firm offer a sum of $60,000 or $70,000, since we were not authorized to do so. We were prepared to start a bargaining discussion and Mr. Gegauf, Sr. warned us he was not willing to start such a discussion. He asked for a definitive offer (to be accepted or rejected but not discussed). We merely stated that due to such conditions, we saw no possibility to go further for the time being since our instructions from Singer contained a maximum and not a sum to be offered as an amount to be accepted or refused without discussion."

He considered his limitations to be so narrow that he was not even authorized to state the maximum price he [fol. 827] could pay because he had taken his instructions on the assumption that there was to be some bargaining, and, since Gegauf prohibited bargaining, he no longer had any authority to even let him talk to Gegauf about the price Singer would pay.

The government relies a great deal on the two paragraphs toward the bottom of page 3. I think that probably these two paragraphs are the cause of the dozens and dozens of references to the fact that Mr. Kirker participated in these conferences. They have cited every single reference to him including one that he would be available, that he attended the conference, or any other fact that in any way relates to him, although it shows absolutely nothing about his authority. They have cited them all. And I think the time spent on it was to try to say that Singer was saying what was said here. I don't think the

conclusion is very good, but I also don't think that what was said here amounts to very much. It says:

> "During the discussion, we pointed out that it was not right to compare what Bernina could get for a license to what Singer would pay for being in a better position for acting against common competitors."

[fol. 828] Well, I think that is rather common sense. Singer already had a license, and I never heard of anyone paying a colossal sum for the mere privilege of spending more moneys to enforce it. Generaly the value of a patent is measured by what it is worth to you to manufacture under it. Singer already had it, and I think the suggestion that Singer should not pay for acquiring a patent under which it was licensed an amount that it would pay if it had not been licensed is just simply common sense.

> "We presented the view that what Singer was prepared to pay is to be considered as an insurance premium for bettering its legal position, and not as the equivalent of a license."

Clearly it was not the equivalent of a license because it already had it. What is meant by "insurance premium" I don't know. That is anybody's guess, and Mr. Elkins lets his fancy roam. I know that it was for bettering its legal position because when it got the patent its legal position was that it could sue on it, and without having the patent its legal position was that it could not sue on it. If he wants to call it an insurance premium without defining what it means, I don't know whether there is any better word for [fol. 829] it or not It was a rather novel situation of a company buying a patent under which it was already licensed because it wanted to enforce it. Now this goes on:

> "To this remark, Mr. Gegauf replied that we were right but that by giving Singer the possibility to stop"——

notice, your Honor, those words, "the possibility to stop"——

> "the Japanese competitors in the U.S.A., there is a serious drawback for Bernina,"——

and this comes back to what Bernina's real interest is, at home in Europe——

> "namely, if Japanese competitors can no longer sell their machines in the U.S.A., they will try to sell them in Europe."
>
> Well, it seems to me that that is just a conclusion that anyone with a little bit of common sense would come to. It is, again, one of these facts of life that exists, and he points it out. It is certainly true that, if we succeed in stopping the Japanese along with Europeans or alone, there is no question but that the Japanese and the Europeans would turn more and more to other markets because they will have to, or else they [fol. 830] will have to manufacture non-infringing machines. This letter goes on to say:
>
> "We answered that if Bernina's patents in America permit Singer to stop the Japanese competitors, the corresponding European patents will permit to act exactly in the same way in Europe. But Mr. Willi and Mr. Gegauf Sr. confessed that unfortunately the position was not so good in Europe."

Now, your Honor, this meant that we had entered into a license with them under which they license us under their European patents. We had assumed that they were good, that they would maintain them, that they would keep them up. I think it is a normal answer for Kirker to say that "Your patents will protect you." This letter concludes with the statement:

> "In any case, it shows that the position of Mr. Gegauf is firm and that he will not make new substantial concessions."

I don't know whether this conspiracy was formed yet. If it was not, it certainly is hard in the making; and if it was, it is hard in carrying out. I don't know which his position is even to this moment.

We come then to the memorandum of November 27th [fol. 831] from Mr. Lightner, and this I consider very important. It was shown to the various officers in the company. It was drafted for the express purpose of giving

it to Mr. Stanford as a guide for him in going to Europe and trying to finally settle this matter. His opening paragraph is:

> "The main purpose of Mr. Stanford's trip will be to obtain such control of the Gegauf patent applications in the United States as will put us in a position to own and control it in order to get the very best patents and bar import or U.S. production of mechanisms which would violate these patents."

The government makes much point of that, that we would enforce the patent against manufacturers as against sellers. I cannot quite understand what in the world the point is because, clearly, if we had a right to get it and had a right to enforce it, we had a right to enforce it against infringing manufacturers as well as infringing sellers. I cannot see that it adds anything to this picture at all except to point out how complete Singer expected its title and ownership of the patents to be. Mr. Lightner states at the bottom of the page:

> [fol. 832] "Evidently, Gegauf has stiffened on price and we may have to pay as much as about three times the original figure. While this may seem high, yet over the years ahead the payment of such a price may well be justified by our having the ability to stop import of very low priced multi-cam machines, not only as a result of the help that we would have in the U.S. market in preventing such import, but also because inability to enter the U.S. market may discourage some people from entering the field and raise unit costs in the case of those who do produce such machines for other markets."

Here again, your Honor, is the statement that we would use the patent. Certainly, if this acquisition is needed and its use is legal, there is no reason in the world why we cannot hope for all the incidental benefits that come from using it to stop infringements, and whether those incidental benefits come abroad or in the United States is quite immaterial. The question is: do they have a right to get and

enforce the patent? The incidental benefits flowing around the world are certainly not material to this action.

On page 3 he says:

> [fol. 833] "If Bernina is to continue to have the right to send machines into the United States and if they consider that right important, they may very well see the wisdom of enabling us to stop other imports from Europe as well as those from Japan."

In other words, in your arguments with him, in your attempts to limit as far as possible the licensing of other Europeans, show him the wisdom of enabling us to stop imports from Europe. And then finally he concludes with what I think is the most significant statement and also the most conclusive statement that is found any place in any document. Having referred to the possibility of inducing agreement by taking some machines from Gegauf, he says, and this is practically in conclusion:

> "In determining whether to broach this idea in the course of negotiations, it must be remembered that getting control of the patent is the main objective, with the elimination or curtailment of European import as an important but secondary objective. . . ."

Now, your Honor, as I said before, the dictionary defines "secondary" as being that which is second in im[fol. 834] portance to that which is first in importance.

As a result of the mission undertaken by Mr. Stanford, upon these express instructions he obtained the assignment which is Government's Exhibit 58. It will be noted that Singer paid the $90,000 and granted back to Gegauf a non-exclusive, royalty-free license to sell in the United States sewing machines of the type disclosed in said United States patent application and made in their own factory in Switzerland.

> "(3) Singer hereby agrees not to introduce, without the consent of Gegauf, legal proceedings on the basis of the said patents against Pfaff in Germany or Vigorelli in Italy, but only"—

and I think this should be noticed——

> "as far as sewing machines manufactured in Pfaff's factory in Kaiserslautern (German) or in Vigorelli's factory in Italy are concerned."

In other words, even the license granted here was the license only to let in machines manufactured by a specific manufacturer in a specific plant. Pfaff couldn't even manufacture these machines in some other plant and import them into the United States, nor could Vigorelli.

And finally Singer made its agreement; that bothers [fol. 835] Mr. Weinstein so much; that they would not make a slavish copy of the construction of the machine or the mechanism. That, your Honor, is the assignment from Mr. Gegauf to Singer. There is the shorter form for the purpose of filing which consists of Government's Exhibit 59.

Government's Exhibit 60, a letter of December 6, 1957, to Mr. Waterman from Mr. Stanford, throws some light on this matter. This letter must be from the Patent Department and not from Mr. Stanford:

> "We anticipate receiving from Mr. Stanford this afternoon the assignment document which transfers title in the above-noted United States Gegauf application from Gegauf to Singer.
>
> "As you know, it is imperative for us immediately to exercise control over this application, thereby to insure that it will not issue as a patent before we have had an opportunity to place it in a condition which will meet our particular needs."

This was not Gegauf's; this was not Vigorelli's. This was Singer's particular needs.

Government's Exhibit 62 is a memorandum by Mr. Stanford with reference to the negotiations for and acquisition [fol. 836] of the assignment. This shows in the second paragraph that Mr. Stanford was going to Mr. Kirker's office and questioned him minutely about everything that had occurred during the recent negotiations. It also shows that it was concluded that the best way to handle the matter

was to call Mr. Willi, patent counsel for Bernina, and see if they could get together.

Over on page 3 at the bottom of the page the government reads the memorandum, reads the portion which says.

> "Rather than approach Mr. Gegauf as a humble petitioner with hat in hand, I immediately seized upon a statement made to Mr. Kirker, at a previous conference, to the effect that the Japanese ornamental stitch machines would be sent into Europe if they were stopped from being sent into the United States because Bernina did not have broad patent protection in Europe. I intimated that this was a surprise to us for we expected Bernina to have patents in Italy, Germany and Switzerland which would fully protect Bernina and Singer, and that it was very difficult for us to appreciate that it was only in the United States that they [fol. 837] expected to obtain any substantial patent protection. I continued to drive this point home and asked if they knew of any publications, facts or machines of which we had no knowledge."

Now, your Honor, there is the tipoff as to what he was talking about. He at this point became worried as to whether they could possibly know anything about any publication, machine or anything else that would affect these patents. He knew of none and he had made a pretty complete search on it, and this whole statement was made in an effort to drive out from them any information they might have that would reflect in any way upon the patentability of the 401 machine, the patentability of the idea contained in the Gegauf application.

Says Mr. Stanford:

> "I then asked them such questions as:
>
> "Why no action had been taken in Italy in reference to their Italian patent;
>
> "What set of circumstances caused them to abandon much of the protection that they should have been able to obtain in Switzerland; and
>
> "Whether or not their patent application which had

been published for opposition in Germany was being [fol. 838] opposed by a third party."

All of that was designed to unearth whether there was any reason in back of these various actions.

"I was informed that they knew of no additional reference publication or prior patents which would have any effect upon the patents,"

says Mr. Stanford after setting forth the questions that he asked. It is perfectly obvious what Mr. Stanford was getting at and what he wanted to know. And, if they had any weakness that he didn't know anything about, he wanted to know it. That's what he meant by saying that he understood or he assumed they would have protection in these various places.

Certainly he had never heard a word that indicated there was any question whatever about the validity of the Gegauf patent in Switzerland or its enforceability. He had certain ideas about the patents in Italy, as he does about all patents in Italy, but he knew nothing that would indicate that the patentability of this idea was not feasible.

I read this morning the significant paragraph from page 6 dealing with young Gegauf and his excitement at the idea that we thought we had a right to make machines or do anything we wanted to under the second application. He [fol. 839] was insisting that that had not been involved, that all the parties had been dealing about was the matter as to which there was an interference, where there was a common subject matter and the claims conflicted, and he said that that was so much so that in the face of the license as it read, which would clearly give Singer a license, he was saying that was not the intention and that was not what the bargaining had been about, and it took his counsel to calm him down.

The government read further:

"Young Mr. Gegauf further argued that if the United States patent were assigned to Singer and if Singer was successful in stopping certain types of Japanese ornamental stitch machines from being shipped into the United States, it would merely divert such ma-

chines into Europe and as a consequence Bernina would have still more competition in Europe, and as a result of the increase in competition in Europe Bernina would have a substantial loss of business."

I don't know what would show more clearly where Bernina's interest was and its danger in having Singer acquire the patent and use it, as it had every reason to [fol. 840] believe that Singer would use it, to stop all imports.

The Court: I think this is a good time to take a little recess.

(Recess taken.)

Mr. Pettit: Still referring to this memorandum from Mr. Stanford with reference to the conference, on page 14 there is this paragraph:

"Bernina does not wish to increase its production. Mr. Gegauf said that they are getting the maximum number of machines off their present tools and that he does not wish to expand any further. He expressed the opinion that small sewing machine companies get into difficulty by over-expansion and permitting their inventories to become too great."

Again one more indication of where his interest was.

Government's Exhibit 63 was a Christmas greeting, your Honor. It says, "... I am writing this letter instead of dispatching to you the usual Christmas card."

The Court: It wasn't very gracious, was it?

Mr. Pettit: No, it wasn't, but he went along and ex- [fol. 841] pressed a lot of nice ideas, one of which Mr. Elkins thinks is extremely strange. Of course, he is not only sending him a Christmas card. He is saying that he liked the chocolate and the bottles of Kirchwasser, in general a chit-chat letter in lieu of a Christmas card, and he ends up:

"It is a pleasure to do business with you and I am happy that our recent business dealings reached such an amicable conclusion. I hope the result will be profitable to both parties."

Now, there is the foundation of the government's charge of conspiracy. That one has more importance in it, I think, than almost any of the other documents have shown.

In the annual report for 1957, that is, the annual report of the Singer Patent Department, it says:

> "Steps were taken to strengthen Singer's patent position in the United States for multiple cam zigzag stitching machines by concluding an agreement with Fritz Gegauf A.G. of Switzerland, makers of the well known Bernina sewing machine, whereby a basic United States patent application relating to such machines was assigned to Singer. Patents issuing on this ap- [fol. 842] plication grouped with other Company patents should put Singer in a better position in any attempt to prevent others from importing into the United States multiple cam machines of the Singer Class 401 type."

Now, your Honor, when it says "patents issuing on this application grouped with other Company patents," it is quite obvious we are referring to the other company patents on the 401 machine. There are, as I have told you, several ideas, several inventions in the 401 machine. The 401 machine carries a label referring to all the patents that cover it, giving notice of any possible infringement of these patents.

I will offer, along with several other of the documents that will come in, just a copy of the label that appeared on the machine at the time it was the only one of this family being made. There are larger numbers on it now because they have produced the 403 machine and the 404 machine and they have enlarged the label to cover patents that cover those machines. But at this time, when it was originally made, it carried this label referring to the various patents, and I would like to offer it to your Honor and we will have it marked in evidence.

The Court: This is on the Gegauf importation?

[fol. 843] Mr. Pettit: That is on the Gegauf machine. That is the label carried on the Gegauf machine—I mean the 401 machine made under the Gegauf patent. That is the label that Singer carries or did carry on its Singer 401 machine.

(Received in evidence as Defendant's Exhibit 119.)

The Court: What is this, a label giving patent notice?

Mr. Pettit: That is a patent notice, and I am relating this to this statement in the annual report, your Honor, about patents issuing on this application grouped with other company patents. Of course, there were other company patents. The other company patents covering this 401 machine were listed right on the label that is placed upon the 401 machine. There is no implication here at all that the Patent Department was talking about other patents, other multi-cam patents. These patents I might point out relate to things other than about the cam. There are many features in there that will relate to any machine, whether it is straight stitch or replaceable or multi-cam, but it is perfectly correct to say that Singer could protect [fol. 844] this 401 type machine with the Gegauf patent and its other patents covering the machine.

Mr. Elkins: We object to it, your Honor, unless it comes in through the testimony of some qualified witness. We don't know what it is.

• • • • • • •

[fol. 845] Mr. Pettit: If the government will not accept it, that that notice rode on the 401 machine, I will prove it.

The Court: We will take it now subject to such proof. If the proof is not submitted and you deem it important, you may move, Mr. Elkins, to strike it from the record. It seems to me that it is all tabulated here anyway on this exhibit in evidence. All right.

[fol. 846] Mr. Pettit: I would like to read portions of Defendant's Exhibit 34 which is a letter of February 11, 1957, to Mr. Gebhardt, manager of the plant in Karlsruhe, Germany, from the Patent Department. This letter is in response to a request as to whether Karlsruhe should proceed with oppositions against Gegauf. The letter says:

> "We have received your letter of February 4, 1957, and in response thereto we have this day sent you a cablegram which reads as follows:
>
> " 'Your protest against Gegauf patent G15628 would not embarrass Singer and would appear to be advisable.' "

"We agree with you that since Gegauf will not discuss their German patent application No. G15,628 and your Gebrauchsmuster No. 1,729,923 you have little recourse but to protest the Gegauf patent application. Such a protest will not embarrass Singer as Singer and Gegauf are direct competitors and the recent Singer-Gegauf agreement relating to specific zigzag sewing machine patents does not affect our normal competitive relationship."

That, your Honor, is just to show the attitude of Singer, what it felt with respect to Gegauf on February 11, 1957, [fol. 847] that they had been engaged in negotiations with them, had already had the cross-license, and were later to engage in negotiations again with respect to the acquisition of their U. S. application.

Your Honor, I wonder if I could just have five minutes to organize just two or three of these documents.

The Court: All right. Tell me when you are ready. We will take a five-minute recess.

(Recess taken.)

[fol. 848] Mr. Pettit: Your Honor, at this time I would like to take up some side issues as they have been thrown into this case by the government. One of them relates to the implication—and a quite erroneous implication—that Singer was just waiting for the Tariff Commission proceeding to end before deciding to license Europeans. Mr. Weinstein said that Singer did not introduce the respondent's machine in the Tariff action, as mentioned in the letter that he was reading from. He says, as mentioned in this letter, that if Husqvarna did not oppose Singer, Singer would not oppose Husqvarna.

I do not know whether that is entirely so, because it leaves the implication that if we signed this, and we did not put in the machine, Husqvarna would not oppose us. The fact of the matter is that Singer did not put in the machine, as you can see from the record, but what you cannot see from the record is that Singer did not have any such machine. That is beside the point. He did not read that. Husqvarna did oppose us and was one of the most bitter opponents that we had in the Tariff Commis-

sion proceeding, and one of the most pestiferous, and I would like to offer in evidence from the Tariff Commission proceedings, Vol, I, pages 55 to 58; pages 65 to 67; from [fol. 849] Vol. II, pages 181 to 182, and page 317; from Vol. III, pages 372 to 375; Vol. IV, page 510, page 618 to page 628.

The Court: What is the purpose of these offers? Why do we want to get into this matter at all?

Mr. Pettit: I would not have gotten into it, your Honor, except as a result of the government getting into it. The government has tried to convince the court that Singer really did not bring a Tariff Commission action at all. It brought an action that was directed against the Japanese only—in the meantime concealing from the Tariff Commission that they were freely willing to license the Europeans and that they were just waiting to make those licenses—all in an attempt to convince this court that a Tariff Commission proceeding, which has to be against everybody or nobody at all, wasn't in fact a proper Tariff Commission proceeding. And it does this in the face of the fact, for instance, that the record clearly discloses that we did not make any arrangement by which they would not oppose us. They did oppose us. And, second, the very idea is just simply assinine and distorted, because it is well known that in a Tariff Commission proceeding, one of the principal facts that they want to know is: Are you [fol. 850] trying to use us as a royalty enforcement agency?

To get into the Tariff Commission you must be protecting an American industry. Once a protected American industry, if you are granting licenses all the time and are coming in against some non-royalty-paying infringers who merely want to use this as a method of stopping them and collecting royalties, it is so much so that even the existence of a single license creates great danger of failure in the Tariff Commission proceeding. That was brought out in the proceeding. Every license that was outstanding, including the Sears, was noted, as was the right of Gegauf to grant licenses to Pfaff and Vigorelli.

Now they implied that if we would just be sly and slick with the Tariff Commission and be quiet, we could then start issuing licenses.

Your Honor, the Tariff Commission watches the situation at all times. There is no way in the world that any licensee can import his machines into the United States after there has been an order of exclusion of infringing machines except by the process of the owner of the patent notifying every customs officer in the United States that [fol. 851] it must hereafter let this machine in because there is a license.

Now how long do they think that Singer could keep an order like that in effect that is based on the fact that there aren't licenses, when it starts granting licenses and notifying all customers officers to let them in? The victory it had won before the Tariff Commission would be lost so fast they would not know what happened to them, and therefore the very concept, the very concept that Singer was waiting to make licenses is just silly. They might as well have dropped the Tariff Commission proceeding because the minute you start granting licenses, the Tariff Commission order would be rescinded.

The Court: You offer this portion of the record before the Tariff Commission in evidence to show that there was opposition by this Swedish company?

Mr. Pettit: That's right, but Mr. Weinstein——

The Court: Is there any objection to it being received in evidence for that purpose?

Mr. Elkins: In the first place, we have not seen it, your Honor, that is, we have not reviewed it in relation to the citations given by opposing counsel. We are acquainted with the transcript, but not particularly with the parts [fol. 852] to which he refers.

The Court: I will receive them in evidence subject to a motion by you to strike after you have examined them.

Mr. Pettit: Your Honor, although there are several volumes and thousands of pages, they know that the Husqvarna machine was not introduced. That is how familiar they are with the record.

Mr. Elkins: We are not now, as we stand here, familiar with those parts as quoted by opposing counsel.

The Court: I will receive it, and if for any reason you feel it should not remain in the record after you have examined it, you make a motion to strike.

Mr. Elkins: And while I am on my feet, your Honor, in relation to the statement made by opposing counsel as to the manner in which the Tariff Commission operates under an order, which might come from the President of the United States, I do not know whether he is asking the court to take judicial notice——

The Court: Yes. I am familiar with the Tariff Commission regulations.

Mr. Elkins: I might ask for your benefit for him to cite them, your Honor.

The Court: Well, I have already looked them up, not [fol. 853] for my benefit, but if you want them cited for your benefit I think he will be happy to do that.

Mr. Pettit: Yes.

The Court: Mr. Pettit, will you give Mr. Elkins the regulation numbers that govern these matters so that he can get them out of the Register?

You see, I had them in a case of somebody copying a Japanese machine a couple of years ago—the Japanese brought a complaint.

Mr. Elkins: If they had not been offered by opposing counsel—if his description had not been offered by them, I would request that the court accept it and give it judicial notice—otherwise may we ask that his interpretation be stricken.

The Court: No, I am taking notice of the Tariff Commission regulations which govern their procedure.

Mr. Elkins: And in relation to any description by opposing counsel, may we ask that that be stricken since it is not going to serve any purpose.

The Court: If it does not conform with what I ascertain to be the facts, I will disregard it.

The extracts from the transcript are received in evidence.

Do you have copies of that for Mr. Elkins—you have [fol. 854] them do you?

Mr. Elkins: Yes, we do, your Honor.

The Court: All right. You look them over and at your leisure if you care to make a motion to strike, you may do so.

They are now received in evidence.

The Clerk: Vol. I is Defendant's Exhibit 120; Vol. II is Exhibit 121; Vol. III is 122, and Vol. IV is Exhibit 123.

(Received in evidence as Defendant's Exhibits 120 through 123 inclusive.)

Mr. Pettit: As your Honor pointed out, this correspondence between Husqvarna and Singer is the normal correspondence by a company that does not want to cause unnecessary antagonism by someone who can be and normally would be a potential customer.

The same thing is true with reference to Phoenix, which they mention as coming to Singer, and indicate that a similar arrangement was made.

On March 20, 1959, Mr. Stanford wrote a letter to Mr. Kircher in reference to the Phoenix matter—and this is Government's Exhibit 118. A representative of Phoenix had asserted that there was some form of agreement between Gegauf and Phoenix that gave Phoenix some [fol. 855] rights. This letter to Mr. Kircher says:

> "If there is a written agreement between Mr. Gegauf and Phoenix concerning the United States patent application which issued into the United States patent now before the Tariff Commission, Mr. Gegauf failed to advise me concerning the same. I am sure that Mr. Gegauf would have reserved rights in the United States patent application for the firm Phoenix, as he did for Vigorelli, if such is the case. I have examined the papers filed with the Tariff Commission on behalf of Phoenix and it is interesting to note that they do not allege or mention that Phoenix has any rights under the Gegauf patent."

Then in the next-to-the-last paragraph it says:

> "As you know, at this time we are not in a position to consider a direct settlement of the question of infringement of our Gegauf United States patent by Phoenix and to grant it a license thereunder. Also, it would seem unwise at this time to become involved in any argument with the officials of Phoenix relating

[fol. 856] to their alleged rights under our patent even though we believe that they are misinformed."

Now there was the philosophy that went through both of these situations—not only Husqvarna but Phoenix—to show a little bit of tact.

Here is a letter, Government's Exhibit 119, a proposed letter to Mr. Schwalb of Phoenix.

It begins:

"This will acknowledge receipt of your letter of March 9, relative to the action we have taken with the Tariff Commission in Washington.

"We are not informed as to any right you may have under our United States patent of Gegauf No. 2,832,302 which is now before the Tariff Commission. The application for this patent was acquired by Singer in good faith and before its acquisition an exhaustive examination was made which included records in the Patent Office in Washington and we found no licenses or assignment adversely affecting our title.

[fol. 857] "This week the Tariff Commission decided to institute a formal investigation and has set hearings for May 5, 1959. Under the circumstances I think it best for all concerned not to enter into a discussion of this matter until after final hearings by the Commission have been concluded.

Just a pass-off letter, obviously no intention whatever and no indication of any intention of getting a Commission order, and then behind its back entering into a license agreement with Europeans.

A letter of April 3, 1959 to Mr. Schwalb, which is Government's Exhibit 120. Mr. Kircher writes:

"We are not informed as to any right you may have under our United States patent of Gegauf No. 2,832,302 which is now before the Tariff Commission. The application for this patent was acquired by Singer in good faith and before its acquisition an exhaustive examination was made which included records in the

Patent Office in Washington and we found no licenses or assignments adversely affecting our title."

Then he goes on to say, attempting, as I say, to avoid [fol. 858] a dispute as recommended by Mr. Stanford:

"As you no doubt have been advised, the Tariff Commission has decided to institute a formal investigation and has set hearings for May 5, 1959. Under the circumstances, while this matter is pending before the Commission, I think it best for all concerned not to enter into discussions of this matter until after final hearings by the Commission have been concluded."

Now where is there any implication whatever that after they had been concluded that we had gotten and successfully obtained an order of exclusion, that we would then start in granting licenses which would take the order away?

The Court: Would it be convenient now to adjourn to tomorrow morning?

Mr. Pettit: Yes, your Honor.

The Court: Will ten o'clock be all right tomorrow morning instead of 10.30?

Mr. Pettit: Yes.

The Court: All right, ten o'clock. Thank you.

(Adjourned to Tuesday, May 16, 1961 at 10.00 o'clock a.m.)

[fol. 859] UNITED STATES OF AMERICA

vs.

THE SINGER MANUFACTURING CO.

New York, May 16, 1961, 10.00 o'clock a.m.

Trial resumed

COLLOQUY

Mr. Elkins: If your Honor please, at yesterday's session there was a discussion by opposing counsel as to certain practices of the United States Tariff Commission, and according to him, as I understand it, once an order issued by the President of the United States, thereafter Singer could not grant licenses to others or, if it did grant licenses to others, then the order of the President of the United States would be rescinded.

At the time we asked for citations of the statutes or regulations so providing, and we would like to receive them, your Honor, for our own benefit.

The Court: I understood that those regulations were going to be collated, at least by reference numbers from the Registers, and that we would get them.

Mr. Pettit: That was the very first thing I was going to address myself to this morning, your Honor.

The Court: All right.

Mr. Pettit: I will refer first to the U. S. Code, Vol. 19, [fol. 860] Sec. 1337. That is entitled Unfair Practices in Import Trade, Unfair Methods of Competition Declared Unlawful.

This sets up the machinery for making investigations after first declaring certain unfair methods of competition, unfair acts and importations of articles into the United States as being unlawful.

These provisions provide that investigations should be made by the Commission, provide for hearings and review, transmission of findings to the President, exclusions of articles from entry, entry under bond, and then in subsection (g) it provides, under the heading Continuance of Exclusion: "Any refusal of entry under this Section shall

continue in effect until the President shall find and instruct the Secretary of the Treasury that the conditions which led to such refusal of entry no longer exist."

As early as June 30, 1955 there appeared a notice in the Federal Register. This is under a big heading. It says, Notices, Department of Treasury, Bureau of Customs. It deals with cigar lighters, revocation of order prohibiting entry into the United States, dated June 28, 1955, and it says:

> "There is published below a memorandum from [fol. 861] the President to the Secretary of the Treasury dated June 20, 1955 containing an order issued pursuant to the authority contained in Section 337, Tariff Act of 1930 as amended, revoking the order of the President dated March 17, 1934 as amended, excluding certain cigar lighters from entry into the United States."

This is then signed "Ralph Kelly." This then is followed by a memorandum for the Secretary of the Treasury:

> "Certain cigar lighters are now being refused entry into the United States under Paragraph (a) of the President's Order of March 17, 1934 issued pursuant to provisions of Section 337 of the Tariff Act of 1930. I now find that the conditions which led to such refusal of entry no longer exist and the said order of March 17, 1934 as amended is hereby revoked. You will please be guided accordingly."

[fol. 862] There is a case where a patent became or was declared illegal subsequent to the order. This was an occasion for revoking the order that had been outstanding. I cite that merely as an example of one of the type of things that can occur to have the President step in and cancel the order.

There is another case where after the complaint before the Tariff Commission had been filed, while an investigation was proceeding, the petitioner issued licenses to foreign importers. That caused, or the discovery of it, the dismissal of the petition. There the Tariff Commission——

The Court: Where is that found? What is the citation?

Mr. Pettit: That is entitled "List No. D-7-17", and is dated June 23, 1958. It is entitled "United States Tariff Commission". It is "Public notice, complaints dismissed, certain expansion bracelets and parts thereof".

I would like to read this notice.

The Court: Could you have copies of those submitted to the Court and give Mr. Elkins copies, too, please?

Mr. Pettit: I will indeed.

[fol. 863] The Court: All right. You say that because of these regulations or these practices that Singer was reluctant to even negotiate with anybody for a license which would permit further importation?

Mr. Pettit: Or to entertain any possible thought of issuing licenses after obtaining the order.

The Court: You say that is the reason for it?

Mr. Pettit: It had its own reasons for not licensing, and I doubt very much that it would have licensed anyone under any circumstances because it has been its policy not to license.

My point is here that this renders rather ridiculous any argument that Singer was affirmatively planning licensing Europeans as soon as the Tariff Commission proceeding was over. It is hard to prove one's thoughts and intentions as to the future. It is perfectly easy to prove that they couldn't possibly have entertained any such thoughts because of rules and regulations that would have made it impossible for them to do so.

Now it is just a matter of common sense because the Tariff Commission won't act as a collecting agency, and this is part of what I am going to read now, if I may. Obviously they are not going to let a petitioner pull the [fol. 864] wool over their eyes—come in and say it is not going to license anybody and then as soon as it gets an order, issue a license and start collecting royalties.

That does not have to be argued, your Honor. That is just so obvious, that I do not see how any question can be asked about it. But we have the Tariff Commission to stop that kind of business.

This says:

> "After preliminary inquiry in accordance with section 203.3 of its Rules of Practice and Procedure 19 F.F.R. 203.3), the UNITED STATES TARIFF COMMIS-

SION, on the 18th day of June 1958 DISMISSED the two complaints filed under section 337 of the Tariff Act of 1930 (19 U.S.C. 1337) by Speidel Corporation, 70 Ship Street, Providence, Rhode Island, alleging unfair methods of competition and unfair acts in the importation and sale in the United States of certain EXPANSION BRACELETS AND PARTS THEREOF. Notice of the receipt of these complaints was published in 21 F.R. 8473.

"The principal reason for the dismissal of the complaints is that while the prayer in the complaints was [fol. 865] for the total exclusion from entry into the United States of foreign articles made in accordance with United States patents because the effect or tendency of such imports is to destroy, substantially injure, or prevent the establishment of, domestic industries producing expansible bracelets of construction and design covered by the claims of such United States patents, Speidel, since the filing of the complaints, has entered into extensive licensing arrangements with major importers of allegedly offending bracelets."

The next paragraph says:

"Section 337 is not an extension of the patent laws and its purpose is not to protect patent rights as such. The complaints set forth that the domestic-manufacturer licensees are not granted licenses to import, and pray for the exclusion from entry of all bracelets which infringe complainant's patents in order that the public will not 'lose an important domestic industry developed by private capital' whose economic justification was based on the protection of the patents. Complainant's action in granting import privileges to several of the large importers charged in the complaints as violating section 337 indicates [fol. 866] that complainant is not so much concerned with the protection from injurious import competition of domestic industries that owe their existence to the patents involved as he is with royalties, whether the royalties come from domestic producers or from importers.

"By order of the Commission" and signed "Donn N. Bent, Secretary."

DISCUSSION OF SIGNIFICANCE OF EXHIBITS BY MR. PETTIT

I will now deal, your Honor, with the bringing of the infringement actions by Singer after issuance of the Gegauf patent.

The first specific mention of any specific action occurred in Government's Exhibit 153, a letter of March 7, 1958, from Mr. Stanford to Mr. Kircher. This letter points out

> "We hope to be in a position to bring immediate suit against one or more of the various United States Brother Companies as soon as the United States Patent Office issues as patents our Johnson and Gegauf applications. We anticipate that such two patents will be issued within the next eight weeks."

A few weeks before that there had been a general reference to the bringing of infringement suits when the [fol. 867] patent issued. That was dated February 18th, I believe, and was contained in a letter to Mr. Kirker, and is Government's Exhibit 127.

As far as I know, that is the first reference found in any of the papers to a potential suit, and this Government's Exhibit 153 is the first reference to any specific suit and referred to Brother.

This was followed by a letter dated March 14, 1958, to Mr. Crawford from Mr. Kircher, President of the Singer Company. This we offer for the purpose of showing the warning that was given to Brother.

This letter says:

> "I enclose herewith a copy of a letter which Mr. Waterman has written to Mr. Yasui of the Brother Company dated March 11. You will note that the letter constitutes an informal and friendly warning to Brother that their machines infringe certain of our patents and also certain of our patent applications which are expected shortly to mature into patents. The infringements involve only the sale of Brother

machines of the types indicated in the letter in the United States and Canada."

Now the type of machines indicated was, of course, the [fol. 868] 401 machine.

On the second page the letter states:

"Before reaching the decision to proceed aggressively to enforce these patents and before deciding to send the letter to Yasui, we naturally took into account the impact which this would have upon our new effort to obtain validation in Japan."

That, of course, your Honor, refers to validation of the contract in Japan which Singer was trying to work out with reference to the manufacture of machines.

The letter continues:

"While the effect is difficult to guage, it was our conclusion that the overwhelming importance of protecting the 401 Machine from infringements by Brother and other infringers made it necessary to subordinate considerations relating to validation in Japan to the larger interest."

It goes on to say:

"While one might be inclined to think that the effect in Japan would be harmful, upon reflection I am not convinced that this will be the case. It might rather indicate to the Japanese the present and potential technological power of the Singer Company from which they might conclude that it would be desirable [fol. 869] for them to reach some accommodation with us in Japan."

On April 16, 1958, Mr. Stanford wrote a letter again to Mr. Kircher—and this is Defendant's Exhibit 39. It states in the last paragraph:

"Our United States Gegauf patent application will issue as a patent on April 29, 1958 and we should be ready to file suit against the United States Brother concerns on that date. With your approval, we pro-

pose to file one or more of these suits on or about April 29 unless in the meantime the Japanese Brother Company responds favorably to Mr. Waterman's letter."

There is a note at the bottom of the letter which says

"Discussed with Williams 4/16 told him to hold off on filing until I return from Europe"

and followed by the initials of Mr. Kircher.

On May 20, 1958, Mr. Waterman wrote a memorandum, the subject of which was "Second Visit of Mr. M. Yasui, President of the Brother Company, at 149 Broadway"—that is Defendant's Exhibit No. 40.

In this it is stated at the bottom of the first page:

[fol. 870] "The result of this visit was that Mr. Yasui was informed it was necessary that we take action because of the great number of machines of various makes that are being imported into the United States which infringe our patents and our applications, which will become a patent shortly. He was informed that we were obliged to start proceedings at once but that we would in no way publicize our action, hoping that he would be able to receive the report of his attorneys and take the matter up further with us before the subject would become common knowledge."

Mr. Williams was there instructed to see about the institution of the suit against Brother International, but of course under the instructions that it was not to be publicized and we would still be waiting to hear further from Brother.

On July 31, 1958, Mr. Stanford wrote to Mr. McKinnon, the company representative in Japan—a letter which is Government's Exhibit 156.

The government points out in paragraph 5 of this letter which reads:

"We have for some time been planning to institute in the United States an action under United States [fol. 871] Tariff laws which action would involve many

if not all of the United States importers of Japanese zigzag stitch sewing machines."

And it argues from that that since it states that "We have for some time been planning to institute", that a fortiori that means it went back before the acquisition of the patent. He failed to note that in the preceding paragraph the same phrase was used "We have for some time been planning to institute in the United States a second infringement suit".

So there the "some time" includes only a period back to the institution of a second infringement suit with respect to an importer and a dealer of infringing Japanese machines.

You will remember that Singer first started against Brother, and then started an action down in South Carolina. This for some time automatically was limited to a period even after the filing of the Brother suit, and yet the government argues that for some time in the next paragraph—he does not cite any authority, he just said blandly that that shows that it goes back for a substantial period before the acquisition of the patent application.

[fol. 872] On August 5, 1958, Mr. Crawford wrote a letter to Mr. McKinnon, which is Defendant's Exhibit 41. He states in the second paragraph:

> "We believe you will be pleased to find that, generally speaking, the policies being followed in regard to the patent infringements will not disturb your efforts and the efforts of our friends in Pine and Japan Steel in regard to validation. We think in advising our friends of the patent situation you should use the deferments in the actions (whether necessary or otherwise) to emphasize how closely we are cooperating and giving every consideration to their views and thus we expect they will push in every way possible for prompt validation of the basic agreements as now amended."

I point this out, your Honor, to show that there were problems involved even in the commencement of suits against Brother entirely foreign to Mr. Gegauf, and Singer was looking after its own interests at all times, wholly

unencumbered by any thought of Mr. Gegauf or the effect that it would have upon him.

We had validation problems in Japan as well as problems of suit in the United States, and Singer was thinking [fol. 873] solely of its own interest with respect to both.

I will take up next—well, before I leave that subject I would like to call attention to the fact that in this Brother action, a motion was made by Brother to delay the trial of the action until after the determination of this present suit.

I will only read the first portion of it. It says "Now comes the defendant"——

Mr. Elkins: If your Honor please, I do not know if this is in evidence or not.

Mr. Pettit: I am going to put it in evidence—I mentioned before that I was going to offer it in evidence.

Mr. Elkins: May we ask that it be marked?

Mr. Pettit: Your Honor, here is the situation. He has put in evidence an answer in this very Brother case in which they make all kinds of allegations.

The Court: The suit is pending in this court, isn't it?

Mr. Pettit: Yes.

The Court: I think I will take judicial notice of the entire file.

[fol. 874] Mr. Pettit: May I just read the first paragraph?

The Court: Yes, without introducing it in evidence.

Mr. Pettit: "Now comes the defendant Brother International Corporation, by its attorneys, and moves this Court for an order staying all further proceedings in this action pending notice of the decision by this Court in a co-pending action entitled, United States of America v. The Singer Manufacturing Company, Civil Action No. 154-108, wherein the present plaintiff is defendant."

The Court: I will make this statement, I think there is authority for the Court to take judicial notice of the files of the court on other litigation in this court.

Mr. Pettit: Your Honor, that is obviously put in as part answer.

The Court: If you want to put it in to make the record complete, all right. I intend to look at the file anyway, so that there will be no mystery about it.

Mr. Elkins: It is quite irrelevant to any issue presented here.

The Court: I do not know whether it is or not. There is [fol. 875] a lot of this material in evidence which apparently is irrelevant, so one more doesn't mean too much.

Mr. Pettit: I will then offer this in evidence.

The Clerk: Does your Honor want to receive that?

The Court: Yes, as an aid to the Court.

Mr. Pettit: You will remember we were even bringing successive suits in South Carolina in order to bring this matter to issue, yet the government argues that we brought the Tariff Commission proceeding in order to avoid it.

(Marked Defendant's Exhibit 124 in evidence.)

Mr. Pettit: I next wish to take up plaintiff's argument with reference to Singer's withholding payment on its filing fee, in response to requests from Gegauf that it be held up.

Now it is true that because Singer had its own problems, as shown by some of these letters that I have read, Singer at that time was in no hurry to get out the patent, as far as one week or ten days or two weeks were concerned. It was not even prepared to bring the action at that time against Brother or anybody else. It therefore [fol. 876] did write in one of the letters indicating that it should or would hold up the filing fee for a short time.

The government fails to point out that Mr. Gegauf's worry was about a Van Tuyl patent and——

Mr. Elkins: I do not know whether that is in the record, your Honor, of any document to which Mr. Pettit is referring.

The Court: There is a letter here from Gegauf saying that the filing fee or the payment of a filing fee be withheld, and there is a response from Singer that they would hold it up a little while, that no harm would be done, and then a subsequent letter saying that they were not going to hold it up for a longer time because the 30-day period was about to lapse.

Mr. Elkins: I am referring to a statement by the defendant now that Mr. Gegauf was concerned with a Van Tuyl patent at this time in, I think, 1958, and I do not believe there is anything in the record.

The Court: I do not know what the Van Tuyl patent is. This is the first I heard of it in this case.

Mr. Elkins: It does not appear in the documents to be discussed—I do not believe it does.

[fol. 877] Mr. Pettit: I will put the Van Tuyl patent in evidence.

The Court: What does it have to do with this case?

Mr. Pettit: I want to show, your Honor—may I say one word about this before I answer that?

The Court: Yes.

Mr. Pettit: I am delighted that counsel is asking for any document which will show that Van Tuyl was in Gegauf's mind.

He resorted to a little psychology yesterday, and I am raising a little question of psychology here. He has the letter, and he made a great commotion over it, from Mr. Magnoni. Mr. Magnoni, in his letter of September 19, 1956——

The Court: That is the Italian patent lawyer?

Mr. Pettit: Yes.

The Court: All right.

Mr. Pettit: —which is Plaintiff's Exhibit 32, states:

> "Mr. Gegauf has been strongly impressed by the fact that the U. S. Van Tuyl patent No. 2,590,907 might very dangerously anticipate its invention. In effect, a third party who might know that the said Van [fol. 878] Tuyl patent exists might take steps for having the Gegauf German patent held not valid."

Now your Honor, why is it that the government told you that they did not have the slightest idea of what patent Mr. Gegauf was worrying about?

Well, I think I can give the answer. They knew that there wasn't anything in this letter that was reliable for any purpose, and within three days after they read it they had completely forgotten that he even mentioned it because they paid no attention to it at the time they read it.

The Court: I forgot it, too.

Mr. Pettit: What did you say?

The Court: I had forgotten the Van Tuyl patent was mentioned.

Mr. Elkins: Your Honor, we have not forgotten it. We remember that it is dated 1956 and that the present documents I thought being discussed by the defendant related to 1958, and we also notice that the Gegauf 1 patent as issued made no reference to a Van Tuyl patent, and we merely state that there is nothing in the documents showing that the concern of Mr. Gegauf in 1958 was the existence of the Van Tuyl patent. He was concerned about it back [fol. 879] in 1956. We do not know whether or not that was his concern when he asks Singer to delay payment of the patent fee in order to hold up the issuance of Gegauf Patent No. 1, but as we say when the Gegauf 1 did issue it did not refer to the Van Tuyl patent. For all we know the patent in question that was concerning Gegauf at this time was the Dunbar patent and not the Van Tuyl patent.

Mr. Pettit: Your Honor, this is the same application pending in Germany at the time in question, and it is perfectly apparent that his worry went all the way through.

I will show that the Van Tuyl patent was cited on the back of each of the following patents: Johnson, Perla and Vigorelli.

Furthermore, it had been cited and discussed in the proceeding itself in Harris, and it had been taken up and disclosed in Germany by Wiegand. You asked—I will read the letter, Government's Exhibit 10, which is a letter from Dr. Wiegand. He says:

> "Referring to the conference with Mr. Stanford and Mr. Kruger on the 7th inst. I beg to report that I have discussed the matter in detail with the competent examiner for Class 52a. In doing so it was [fol. 880] found that the examiner did not know any better material than that known to us.
>
> The examiner was extremely pleased to get knowledge of the American Patent No. 88,282."

Which is the Dunbar patent just referred to by Mr. Elkins.

> "He also took a note of the British Patent 19,184/1908 and the copy of the German Patent 219,187 which I submitted."

Your Honor, the very purpose of this visit back in 1955, before we had come to any agreement with Gegauf, and when the company was doing everything it could to get any information in the hands of the examiners that would destroy the patent, the patent attorney went in to give information on everything that we had—bearing in mind that this was before we had any arrangement with Mr. Gegauf.

[fol. 881] Now the point of all this, your Honor, is that a big fuss is made over nothing. Singer knew that there was nothing that would be disclosed in any respect that would bar any of these patents by this time. It was not in a hurry itself, and it just delayed it in order to accommodate a man wishing for a delay, knowing full well that it could have no effect whatever on the patent situation.

The reason the Van Tuyl patent was cited and the reason it was discussed was because it deals with cams. It had a stack of cams, but the cams were used to select thread. A machine could have three different threads available underneath and one on top and it could have different colors. This was a mechanism for the selecting of thread. It had nothing to do with the mechanism relating to the movement of the needle. Therefore it was merely an example of a prior art, of using cams to move something, and it never, in any Patent Office stood in the way of these inventions or the issuance of any patent.

Mr. Elkins: If your Honor please, this certainly is or appears to be testimony, and we ask that it be stricken. [fol. 882] There is no rule of practice, your Honor, that says that a witness cannot take the stand and testify as to these matters.

The Court: He is now about to offer this Van Tuyl patent in evidence, I understood, and this was his little explanation of it before he offered it in evidence.

Is that correct?

Mr. Pettit: I think the documents will show that my explanation is correct. I rely on the documents.

The Court: You now offer it in evidence?

Mr. Pettit: I now offer the Van Tuyl patent in evidence.

The Court: Any objection?

You say this Van Tuyl patent disclosed the use of cams

to make a selection of needles employing various colored threads?

Mr. Pettit: Not to make a selection of needles, no, your Honor; to make a selection of thread. It did not have anything to do with the movement of the needle laterally. Whether it selected a needle and selected a thread, I will have to ask Mr. Williams.

The Court: It must have selected the needle through [fol. 883] which the thread——

Mr. Pettit: It is not a zigzag machine, I am told, and it selects only thread. So it is cited because it is an example of prior use of cams to make a selection, and that had the same thing. It had a means of selecting the cam.

Mr. Elkins: We do object to this, your Honor, as being irrelevant. It does not relate to the subject matter now under discussion.

The Court: Objection overruled. I am going to take it because it is specifically referred to in Government's Exhibit 32, if for no other reason.

(Received in evidence as Defendant's Exhibit 125.)

Mr. Pettit: Your Honor, the next documents I wish to take up are those with reference to Mr. Heimann's suggestion to Mr. Gegauf transmitted again to Singer, contained in Government's Exhibit 66. The government miscites, I think quite considerably, this letter and draws inferences and implications from it that are wholly unfounded. On the second page it is said:

> "During a discussion with Mr. Heimann of the Pfaff Company he asked me whether I believe that [fol. 884] also the Singer Company would be prepared to help that a further gaining ground of the Japanese machines on the European market be prevented in respect of patent rights."

That follows a discussion of his problems in Germany and plans that he was trying to work out in Germany to work up some kind of opposition to Japanese imports. They in Germany were agreeable. He had ended his previous paragraph by saying, "I hope to be able to induce those firms, which made interference"—and I think he

meant opposition—"against our application, to withdraw their interference under certain conditions."

This sentence is clearly asking Singer, an organization which does business in Germany, which belongs to associations in Germany, would Singer also join this group, and you will notice the pencil mark or pen mark out to the right in which it says "No."

Mr. Elkins just completely transposes the "also" and reads it that Singer has already made one agreement to that effect and they are asking whether they will also make another agreement to that effect. Now, the language isn't there. That is just Mr. Elkins' imagination and it is the way he would like to have it. This sentence is perfectly [fol. 885] clear that it is asking whether Singer would join the people in Germany, and the answer was no.

He also makes great comment, and long, on the next sentence which says: "As it seems people know already that a patent arrangement was reached between the Singer Company and the Bernina . . ."

Here again one word is seized upon, as is "pool," and every implication that can be drawn from it that is illegal is immediately put into it. This is just not a layman in Germany writing a letter; this has everything that a lawyer can put into a patent arrangement that is illegal. Mr. Elkins reads it in.

Mr. Gegauf had, in fact, two different agreements with Singer. He had made a cross-license agreement; he had made an assignment with a license back. What reason leads him to think that he had in mind anything other than the existing fact that he had made these arrangements? And I think, when he says a patent arrangement was reached, he means exactly the arrangement that was reached, first, cross-license and, second, the assignment and the license back.

Mr. Elkins stopped with the comment that Mr. Waterman simply noted the contents and sent them along. He [fol. 886] didn't care to refer to a subsequent document that was written by Mr. Stanford. You will note that this letter, in which this Heimann reference was referred to was sent to Mr. Stanford, patent counsel, by Mr. Waterman, and he says "will await your comments concerning the question raised by Mr. Heimann."

Now, he got Mr. Stanford's comment which was given as a result of a request of the vice president of the company and was given to him as an attorney to the vice president. This reply is dated August 26, 1958, which, as you will note, if Mr. Elkins does not object, is normally a vacation period. This is Defendant's Exhibit 55. Mr. Stanford wrote:

> "I have a copy of Mr. Gegauf's letter of July 25th which you sent to me along with the referral slip asking for my comments on the paragraph concerning the question raised by Mr. Heimann of the Pfaff Company."

He then says:

> "Before making any comments I would like to clear up a statement made by Mr. Gegauf in the second paragraph on page 2 of his letter. Mr. Gegauf infers that a patent arrangement has been reached between Singer and Bernina."

[fol. 887] This sentence is then repeated: "This implies that we have some type of patent arrangement with the Bernina Company. As you know, this is not true. All we have with Bernina is an agreement whereby the Bernina Company may continue to make a certain type of automatic zigzag stitch sewing machine without fear of suit from Singer, and Singer may continue to make its Class 401 machines without fear of patent infringement suits brought by Bernina. There are no"—and I think your Honor must read in there "other" because he just cited cross-licenses—"cross-license agreements whatsoever and we have not agreed to anything concerning patents other than not bringing infringement action against Bernina."

Mr. Elkins: Excuse me. What is that exhibit number?

Mr. Pettit: Defendant's Exhibit 55. At the bottom of the page he says:

> "I only wanted to point out these facts to make it clear to you that in my opinion we have dealt at arm's length with Bernina and Mr. Gegauf. To agree with Pfaff, Bernina and possibly other sewing machine manufacturing companies that we would take any

[fol. 888] concerted action or favor one or more of any group would in my opinion be unwise and contrary to the Singer policy heretofore rigidly adhered to of not working in concert with one competitor against any other competitor."

Now, your Honor, we may look back in Government's Exhibit 27——

Mr. Elkins: If your Honor please, this is not Defendant's Exhibit 55.

The Court: According to my notation it is. Here it is here. It seems to be a most potent piece of evidence in favor of the defendant. I have read it a number of times as being a contemporaneous writing. It negatives all idea of conspiracy.

Mr. Elkins: We will address ourselves to it, your Honor. All I wanted to do now is check the exhibit number.

The Court: Let's clear this up. Is there any question about this? I have it here as Defendant's Exhibit 55.

Mr. Pettit: I point out that the government has their red marks on it, and the only thing they marked is where the same thing was repeated. I would think he was probably interrupted on the telephone.

[fol. 889] I am told that there is another letter of August 26, 1958, which is marked as Exhibit 42.

Mr. Weinstein: All right.

Mr. Pettit: I want to continue, your Honor. I would just say that that language is strangely reminiscent of some similar language used just two years before. You will remember that when Mr. Vigorelli made a suggestion back in 1956 that there be some kind of cooperation, this was written two years prior to this:

"What Mr. Vigorelli had on his mind was that now that Singer, Bernina and Vigorelli had arrived at certain agreements they should thereafter act in concert against others. This we very promptly said to Mr. Vigorelli was out of the question, and he was advised that what appeared to us to be proper action was for each one to prosecute his own patents and take care of any cases of infringement that might appear. We stated that certainly this would be Singer's attitude with respect to the patents that it owned."

The Court: That was which exhibit number?

Mr. Pettit: That is Government's Exhibit 27, exactly the same refrain each time it is mentioned by any Euro- [fol. 890] pean: We do not act in concert with respect to patents.

And maybe one indication of lack of concert would be Defendant's Exhibit 56. This is a letter to Mr. Adamson from Mr. Sanford referring to the withdrawal by Gegauf of Gegauf's application in Germany. You will bear in mind that this was an application under which Singer was licensed and in which the government said we had great interest and were going to benefit completely by the failure to show the Van Tuyl patent which, in fact, had nothing to do with it. Here is what happened with respect to that application, This letter says:

> "Page 4 of your letter contains a notation that the above identified Gegauf German application had been withdrawn and that the effects of a provisional protection are considered as not having taken place."

So we got the information that Mr. Gegauf had withdrawn his application from Mr. Adamson, not from Mr. Gegauf. This letter goes on and says:

> "In view of this situation we would be pleased if you could determine the exact status of this German application and why it was withdrawn. We presume [fol. 891] that in view of the withdrawal of this application there is no possibility of having a German patent ultimately issue therefor."

Now there is Mr. Gegauf acting upon his own without any reference to Singer, without asking Singer whether it thought there was any point or need or purpose of withdrawing it or as to even whether it objected to it, and that an application under which Singer had a license.

Next I will discuss Singer's endeavor and ultimate success in obtaining a license of the Vigorelli patent dealing with the movement of the feed. This is a very interesting piece of mechanism, one that appeared no place else as far as we know.

Mr. Elkins stressed, and he put in each document that

he could that would show, that Singer was interested in it only as a patent, not the slightest indication that Singer could be interested in it for any other purpose. Each little document he took was one where it would have some verbiage that would indicate we were interested in getting the patent, and then he picked one or two reports, not all but one or two reports, where people were not in favor of the machine, and he left out every single one of the [fol. 892] reports showing a detailed, careful and extensive study by Singer of the mechanism, of the machine itself, in trying to determine whether the machine would be one that Singer wanted to use.

He cites, in Government's Exhibit 141, the letter which has the statement in it, "The consensus of opinion seems to be that the facts do not warrant our being interested in making such an offer," and he cites down below "The thing I was concerned about is patents." He didn't read over on the next page, "Certainly the work produced on it is phenomenal and far beyond anything that has been produced on the 401."

He cites Government's Exhibit 143, signed by Mr. Aurell, which would indicate that we probably should just get a patent:

> "I understand that the new Vigorelli mechanism is quite radical and that their patents, when issued, may be of such a nature that we could not develop a similar machine without infringing. If this is correct, it seems to me that regardless of the degree of value to us of these patents at the present time, in order to maintain our traditional leadership in the sewing [fol. 893] machine field, it would be advisable to make a deal with Vigorelli, before it is too late."

Now we come, though, to other documents which he doesn't refer to and has not the slightest interest in; and I refer you to Defendant's Exhibits 67, 68, 69, 70, 71, 72, 73, 74, 75 and 76, and I will come later to Government's Exhibit 144. These that I mentioned up to 76 are all defendant's exhibits.

What are these? These are reports by various individuals in the Singer organization acquainted with the manufacturing techniques, the operation of the machines,

the salability of machines. The entire organization had been put to work examining this machine, and in each one of these the general form starts with, first, Sales Feature, and it is divided into A. Positive and B. Negative. It then goes on to the second division, Technical and Performance Characteristics; C. Questionable Characteristics; IV Service Problems.

Now if you will note, every single one of these reports goes into a detailed analysis of the machine, not into an analysis of the patent. It goes into an analysis of the machine and whether it has good features or bad features, whether it would be salable, and whether Singer could use [fol. 894] it, and this goes on and on. I think there are at least nine or ten different memos of the organization that had examined that machine and made a report on it.

This ends with Government's Exhibit 144 which Mr. Elkins read and, I think, without comprehending the significance of what was said in what he read. If you look at Government's Exhibit 144 in the last paragraph, you will find that Mr. Lightner sums——

The Court: Suppose we give you a few minutes rest while this air raid siren is going on. Take a five-minute rest. I don't think you can compete with it.

(A short recess.)

Mr. Pettit: The significance of all this search into the workability, feasibility of the machine itself is shown in the last paragraph of Government's Exhibit 144. Mr. Lightner, writing a letter to Mr. Waterman, says:

> "The thing that I find to be missing is an analysis of the patent situation; that is, what is there in the patent area which we can acquire? To state it differently, what can we make a machine do if we acquire the patents that would be secured in a new deal with [fol. 895] Vigorelli and that we cannot do under our present patent situation?"

In other words, he is calling attention to the fact: Don't limit yourself just to what this machine can do, but before we acquire any Vigorelli patent, let's have an analysis of what we can do as we now stand and see whether the

Vigorelli patent lets us do something more. Again, a complete indication of what they are interested in is what kind of machine they can make, and if they cannot do something with a new patent, they cannot do now, then there is no point in getting it.

And this correspondence was concluded by Defendant's Exhibit 77, a letter written to Mr. Vigorelli, in which it says:

> "We have now completed our consideration of this matter, from both the mechanical aspect and the question of infringement of the patents of others, and our conclusion is that we will not embody the mechanical features of the machine which you submitted to us in any of our present machines. However, at some time in the future, we may wish to manufacture and sell a machine having the control for the zigzag needle [fol. 896] and the feed-dog which is embodied in your machine. Therefore, we would be interested in acquiring a non-exclusive license from you on any patent or patent application which you may have filed covering this feature. If you would be interested in granting to us such a license on a royalty basis or any other basis, would you please let us hear from you."

And, your Honor, they heard from him, and the net result was an agreement that I would like to offer in evidence, an agreement under which Singer paid $25,000 to get these non-exclusive rights, this agreement between Vigorelli and Singer.

The Court: This is a new agreement just recently made since this suit was started?

Mr. Pettit: This was made since this suit was started, yes, sir.

The Court: And you offer this to negative any claim of conspiracy?

Mr. Pettit: No, I offer this—well, in a sense, yes, but I offer this primarily for the express purpose of showing Singer's interest in the feed mechanism covered by the patents, an interest that was in the possibility of Singer making the machine and not just for acquiring a patent, [fol. 897] and this applies with reference to the Messer-

schmitt application just the same as with Vigorelli. In other words, Singer was interested in the patent, the operating end of the matter.

The Court: Does this agreement that you now offer in evidence provide for a non-exclusive license to Singer?

Mr. Pettit: It provides for a non-exclusive license, yes.

The Court: Any objection?

Mr. Elkins: No, your Honor. We would like the date of it.

The Court: It is received in evidence then.

Mr. Elkins: We would like the date of the agreement. It does not appear on here that I can see.

Mr. Pettit: December 30, 1960 is the date.

Mr. Elkins: Is there any question now about that date, your Honor? Does the defendant concede that the date of it is December 30, 1960?

Mr. Pettit: It was executed without the date being filled in. I will offer here a letter of January 2, 1961, if you want, in which it refers to the date.

The Court: Just annex the letter to the agreement and we will receive them all as one exhibit. Just staple them [fol. 898] together.

(Received in evidence as Defendant's Exhibit 126.)

The Court: You say Singer paid $25,000?

Mr. Pettit: $25,000.

Now, your Honor, just as Singer, when it acquires patents or licenses, does so because it is interested in making or selling a product covered by them, it also is not interested in grabbing up patents merely to hang them around their belt as an Indian does scalps. We have several instances here in which Singer declined opportunities to buy patents relating to the zigzag field and the multiple-cam feed.

I refer to Defendant's Exhibit 1 dated March 25, 1954. This letter is entitled Selective Pattern Cam Control Means for Use in Conjunction with a Zigzag Machine—Mr. Pfefferkorn.

I might say this is a letter to Mr. Waterman from Mr. Stanford. It says:

> "As we understand the present situation, Mr. Pfefferkorn has offered to The Singer Manufacturing

Company all rights in a device in the nature of a selective pattern cam control mechanism for use in [fol. 899] conjunction with a family-type zigzag sewing machine."

At the bottom of the page it states:

"The pattern cam control mechanism as applied to the Turissa machine is connected with the bight regulator lever only so as automatically to shift such lever in a manner to produce various patterns of ornamental stitches."

It goes on to discuss the patentability of the idea. On page 3 it says:

"In view of the above, it is obvious that the subject mechanism is not broadly new. However, we believe that the cam plate with its concentric cam track surface design is specifically new as applied to a zigzag stitch sewing machine and is perhaps of a patentable nature. Also, it would appear that the specific form of variable speed drive mechanism is somewhat novel as applied to the rotary cam element of a zigzag stitch sewing machine. In view of this situation, we believe that specific patent protection might be had in most of the principal countries throughout the world. An investigation of our patent [fol. 900] records indicates that as yet no patent has been issued covering the subject mechanism. Furthermore, from the correspondence accompanying your letter, would surmise that only Swiss and/or German patent applications have been filed for this mechanism. We do not, of course, know when such applications were filed, if ever, but it is possible that it is not yet too late to file patent applications for this mechanism in countries other than Switzerland and Germany."

In the final paragraph it says:

"Summarizing, we believe that the present device comprises specific patentable subject matter only and that it infringes no Singer-owned patents, nor would it appear to interfere with any Singer developments

of which we have knowledge. In our opinion, the patent rights offered will be of little value to us unless Singer is contemplating developing a machine utilizing a structure similar to that shown in the drawing."

Now, your Honor, that concentric cam is the cam that is now being used by——

[fol. 900a] Mr. Elkins: We object, your Honor. This appears to be testimony. This is testimony, your Honor, and it does not appear from the document as to what the concentric cam is that is referred to there.

[fol. 901] Mr. Pettit: It shows that it has a concentric cam, that has the grooves and the cams and a follower that will follow it, and will transmit the information to the needle bar—it shows that.

The Court: There is no need for me to make a ruling now. Mr. Pettit's statement, if it is not borne out by the documentary exhibits, will be disregarded unless it is substantiated by oral testimony presented.

Mr. Elkins: Unless the defendant substantiates it.

The Court: Yes.

Mr. Elkins: Yes.

The Court: If it is not in the documentary evidence.

Mr. Pettit: Your Honor, I submit that it is in the document itself.

The Court: All right.

Mr. Pettit: Now Defendant's Exhibit 2 is a letter from Mr. Waterman to Mr. Stanford, which is referring to another possibility of acquiring the patent or patent application.

Defendant's Exhibit 3 is Mr. Stanford's answer to that. [fol. 902] This refers to a man by the name of Haas. He says:

"Investigation through our files indicates that the subject Haas zigzag sewing machine is disclosed in a Swiss patent of Haas No. 300,900, August 25, 1953. The machine disclosed in this Swiss patent appears to correspond substantially with Mr. Gebhardt's written description.

"From the Haas patent it would appear that the subject machine is particularly characterized by its

single disk cam which is provided on each of its two opposite faces with a plurality of cam grooves which are adapted to receive a pair of cam followers. Apparently, these cam followers may be manœuvered to engage selective cam grooves thereby to produce various types of ornamental stitches. From this, it is to be appreciated that broadly speaking the Haas zigzag mechanism is similar to that which has been proposed for use with a modified form of the Class 306W machine, as well as for use in the Experimental 282 machine. However, the claims of the Swiss Haas patent are concerned with the specific Haas structure, and, thus, we do not believe that they would interfere with Singer's right to manufacture and sell the above [fol. 903] noted modified Class 306W or Experimental 282 structures."

And not being in opposition, Singer had no interest.

The third example of this is one which we have already run across and appears in Government's Exhibits 52 and 53. This was another case where there was a patent application pending relating to the multi-cam situation.

On page 2 it is stated—this is in the letter to Mr. Kirker.

"The second U.S. application No. 435,832 we believe relates to the idea of having two zigzag mechanisms, one for fancy stitching and one for the usual zigzag stitching with means for shifting at the will of the operator from one mechanism to the other."

In other words, your Honor, a mechanism in which you can leave the multiple cam and go directly to a straight zigzag machine.

"If this is the 'divisional' application to which Mr. Gegauf refers, and we are now of the opinion that it is, then we are not interested in it and it is not necessary that it be included in the proposed agree- [fol. 904] ment."

Now I think, your Honor, that demonstrates no avaricious desire to acquire each and every patent that Singer runs across.

The Court: You have made that observation with reference to this same sentence yesterday.

Mr. Pettit: This is added to two others now.

The Court: Oh!

Mr. Pettit: I think it is triply so today.

The Court: Except I want you to know that I recalled it.

Mr. Pettit: I have become accustomed to that, your Honor.

We now come to the Tariff action itself, and this is one that causes great frustration to the government because it cannot quite make up its mind what position to take, just as it has not been able to make up its mind yet whether the Gegauf license agreement is part of the conspiracy.

As I understand Mr. Weinstein, he just simply denies that it is an action to stop the Europeans. He says that much of it is pure camouflage and is in fact an action to stop the Japanese.

Mr. Elkins does not seem to agree with that. He under- [fol. 905] stands that we are stopping the Europeans but he says that is something that they do on their own accord. So whether this is an action against the Europeans or not is not settled at the government's desk, but I think it is settled by the Tariff Commission complaint itself.

Before getting into that I would like to read part of a letter dated August 26, 1958, which is Defendant's Exhibit 42. This was written in connection with the preparation of the information for the Tariff Commission proceeding. This letter states, as written by Mr. Stanford to Mr. Waterman that the patent department has sent a report stating "that the subject Phoenix machine would infringe the following Singer-owned patents", and that includes 2,832,302. The heading of the letter shows that it refers to "German-made Phoenix zigzag sewing machine".

It says:

> "You have raised the question as to whether Singer should take any action against the United States importers and dealers of the Phoenix machine on the basis of our United States patent rights.
>
> "As you know, the above noted United States Harris and Gegauf patents are currently being infringed by a

[fol. 906] relatively large number of Japanese-made and a relatively small number of European-made sewing machines. To date, we have filed one civil suit against Brother International Corporation, the United States importer of the Japanese-made Brother machines. During the first week of September, we propose to file in South Carolina a civil suit against a dealer of Japanese-made Sanshin machines. We chose to file civil suits in connection with the Brother and Sanshin machines since it is our understanding that these particular machines are imported into the United States in rather large quantities."

Now here comes a very important paragraph:

"By the latter part of September we plan to file an action with the United States Tariff Commission for the purpose of preventing the importation into the United States of any and all sewing machines which infringe our United States Gegauf and Harris patents. Success before the Tariff Commission should obviate the necessity of Singer bringing separate civil suits against each importer of an infringing machine, whether it be made in Japan or in Europe."

[fol. 907] And the last sentence says:

"In the event that our Tariff Commission action fails, then it would be in order to file civil suits against any infringers of our subject patents."

There, your Honor, in the last sentence is the key to the reason that Singer was constantly saying "This is no time to talk." Obviously there would be two different results, depending on the decision of the Tariff Commission. If the Tariff Commission should do so now, then of course it would be in order to talk about infringement suits—and heavens knows how many.

On December 22, 1958, which is Government's Exhibit 157, Mr. Waterman wrote to Mr. Baumann:

"We are in the process of bringing an action under the United States Tariff laws, the result of which, if successful, would be to exclude from entry into the

United States all automatic zigzag machines of the type similar to the Gegauf-Bernina, Vigorelli, and the Singer Class 401."

It goes on to ask for information to help prepare the complaint, and it has to get information from Vigorelli. It says:

[fol. 908] "In order to properly prosecute this action, it will be necessary for us to tell the United States Tariff Commission about our outstanding licenses under the Gegauf Patent No. 2,832,302 to Gegauf-Bernina and Vigorelli, so that the Gegauf and Vigorelli machines will not be excluded from being imported into the United States."

Obviously, your Honor, that refers to the fact that if an order is entered the Customs office keeps every infringing machine out unless advised that it is licensed.

"Also, it will strengthen our case for us to advise the Tariff Commission of the approximate number of automatic zigzag machines exported to the United States by Vigorelli during the past 12 months. We are making, this same request of Gegauf-Bernina."

And Government's Exhibit 158 does make that same request with respect to Mr. Gegauf.

Now considerable commotion is made over the fact that in preparing this petition the company has to get information that directly relates to and must be furnished to the Tariff Commission. Where do they think the company will get information as to imports by its licensees except by writing and asking?

[fol. 909] We come then to the complaint, your Honor, and this is Exhibit S-11. This is the petition filed before the United States Tariff Commission, and I do want to note merely some portions of it that relate to what Singer was seeking to accomplish.

On the first page, the third paragraph it says:

"In complete disregard of Singer's United States patent rights a host of foreign-made automatic zigzag

machines, primarily from Japan, are being imported into the United States".

So here again is the use of the word "primarily", which is quite correct, and it shows on the face of the complaint that the primary ones are the Japanese.

On the next page it says:

> "Section 337, as interpreted and applied by the Commission and the courts, affords the only remedy and thus Singer thereby prays that the Commission recommend to the President that household automatic zigzag sewing machines and parts thereof covered by the said United States Patent No. 2,832,302, be excluded from entry into the United States for the term of said patent."

Immediately underneath that, under the heading of [fol. 910] "Complaint" it says

> "Complaint is hereby made, pursuant to Section 337 of the Tariff Act of 1930, as amended, against unfair methods of competition and unfair acts in the importation into the United States and sale therein of household automatic zigzag sewing machines and parts thereof which embody, employ or contain the inventions covered by the claims of the United States Letters Patent No. 2,832,302, dated April 29, 1958."

[fol. 911] On page 7, paragraph 4, it is alleged:

> "Singer has granted royalty-free licenses under said patent No. 2,832,302"—and I am skipping—"for importation into the United States of certain designated models of automatic zigzag machines manufactured by said companies in Italy and Switzerland, respectively. Each of said licenses was granted in connection with the settlement of overlapping subject matter in applications for United States patents filed by the respective parties. Singer is presently in the process of granting a license under said patent No. 2,832,302 to Sears, Roebuck & Company of Chicago, Illinois, for importation into the United States but limited to a certain designated model automatic zig-

zag machine manufactured in Western Germany by Gritzner-Kayser A. G. No other licenses are in existence or in contemplation."

On page 12, paragraph 16 it is alleged:

"Imports of said machines from countries other than Japan are also sold and offered for sale throughout the markets of the United States at prices below [fol. 912] the price of said Singer product."

On pages 15 and 16 there are listed United States importers of machines which embody the inventions of the Singer patent—large numbers of those importers.

On page 17 there is set forth under the heading Manufacturers of Machines Which are Imported into the United States and Infringe Singer Patent No. 2,832,302, and it will be noted that it continues for two pages. It is divided into the countries in which the manufacturers are located. The first heading is Located in Japan, and as you will see by looking at it, there are, of course, a large number of Japanese infringers—I mean manufacturers, and this, of course, becomes relevant with respect to a letter which I will get to in a few minutes.

On the next page it shows that there are a total of eleven manufacturers located in Sweden, Western Germany, Switzerland, Italy and Spain. That is, five countries and eleven manufacturers from Europe are cited as importers.

On page 22, in the final Wherefor clause, it says:

"Wherefor, Singer prays"—and in the last part of paragraph 2 it says that "the President forbid [fol. 913] entry, pending completion of an investigation by the Commission of household automatic zigzag sewing machines and parts thereof which embody the inventions and infringe the claims of United States Patent No. 2,832,302."

Under No. 4 it asks for the same relief upon completion of the investigation.

Now, your Honor, how anyone can read that complaint and raise or attempt to raise any serious question as to

either what it says or what it asks or what was intended is hard to understand.

Even Mr. Weinstein has admitted that it was absolutely necessary that we ask for all of them and seek all of them or else we would not even be before the Tariff Commission. And yet for some reason or other he says that we are not asking for it, although it is there in black and white.

They then refer to a letter written by Mr. Crawford to Mr. McKinnon—Government's Exhibit 161. He has forwarded a copy of the petition. He says in Government's Exhibit 161:

> "As you know, the Company had under consideration the filing of a complaint with the Tariff Commission against the import of zigzag sewing machines [fol. 914] which infringed your suppliers' patents."

This is written to Mr. McKinnon in Japan, who has charge of the entire Singer organization there.

> "This complaint has now been made, and for your information we attach a copy of the actual complaint. Since being lodged, the complaint has aroused quite a storm of protests by sewing machine importers and dealers, particularly those who import from Japan, and various newspapers have reported on these protests."

Here again, your Honor, Singer was confronted with a situation in Japan.

The letter goes on:

> "There will no doubt be similar repercussions in Japan for, as you will note from the complaint"—and I would like your Honor to note that the statement is "as you will note from the complaint, it is aimed more directly at Japan than at any other country but our position is that it is aimed at anyone and everyone who infringed our patents—and this should be your position."

What he is telling him is "In the face of repercus- [fol. 915] sions let them know that although by looking at the complaint you would think it was directed

mostly at the Japanese, assure them, so we will not have any trouble in Japan, that it is directed against everybody, and that should be your position and that is what you should tell them, so that they will know the facts and not merely to reflect something that is not the truth."

It was to let Mr. McKinnon know how to handle this situation and what to say and above all things to point out that it was directed against everybody.

At the end of the year Singer's patent department made its annual report. This is Defendant's Exhibit 45. The report is for the year 1958 and it states as follows:

"Some five years ago, this office was primarily concerned with the determination of the legal risks involved if our Company were to make and sell the Class 319 and 401 machines. At that time it was evident that one or more of our competitors owned United States and foreign patent rights which could seriously interfere with our automatic zigzag machine [fol. 916] program."

It then goes on to say:

"With the subsequent acquisition by Singer of domestic and foreign rights under the Harris, Vigorelli, Messerschmitt and Gegauf patents and the ultimate issuance to Singer on April 29, 1958 of Gegauf United States patent No. 2,832,302, our concern switched rather sharply from problems of defense to those of offense. This was caused by the fact that the Gegauf patent is presently being infringed in the United States by substantially all of the competing automatic zigzag machines."

And in the next subsequent paragraph it says:

"Accordingly we are attempting to gain relief through the seldom-used United States Tariff Rule 337 which, if successful, would result in a Presidential decree banning all further importations of the infringing machines during the life of our Gegauf United

States patent. The Complaint praying for such relief was filed on January 14, 1959."

[fols. 917-917a] On February 24, 1959, after the action had been brought, Singer continued its search with respect to the European machines.

* * * * * * *

[fols. 918-920] Afternoon Session

Mr. Pettit: Your Honor, the government and the defendant have entered into a stipulation covering the foreign law which we discussed a few days ago, and I would like to offer this stipulation in evidence.

The Court: That is to be added to the stipulated facts, is it not? This is just an aid to the court?

Mr. Pettit: No, it is a stipulation as to the law of France, Italy, Germany, Great Britain and Brazil, as set forth in the stipulation.

The Court: All right, I will take it. Mark it as a court's exhibit. We did that with the other statement of facts. That way we won't confuse it.

(Marked Court's Exhibit 4.)

* * * * * * *

[fol. 921] Mr. Pettit: Your Honor, I have already offered to you as an aid, a chart consisting of the tabulations of the various terms extracted from the three license agreements.

I would like to offer three more—two of which you have had once before but they were withdrawn.

Then I would like to have all of them marked, at a minimum, for identification just so as to have a record of the documents offered in court, and if Mr. Elkins has any objections on the grounds that they are briefs, I will say that they are just counted against his 50-page brief that he has already filed—and if they want them to go in as a statement of our position on these matters, I will let them go in that way.

The Court: We will take them simply as being illustrative of the defendant's position concerning these patents —not in any way as an exhibit but simply for identification to aid the Court, and such portions of it as I do not find accord with the facts I will disregard it.

Mr. Pettit: I would expect you to.

The Court: It is something to aid me in looking at these [fol. 922] patents.

Mr. Pettit: And as I understand it they will be marked for identification.

The Court: Yes.

Mr. Pettit: Then I would like to have marked for identification the documents showing the provisions of the various license agreements.

The Court: That is this paper here?

Mr. Pettit: Yes.

(Marked Defendant's Exhibit 133 for identification.)

The Court: I have another schedule, Gegauf No. 1 and the Harris Reissue. This has not been marked at all.

Mr. Pettit: I would like to mark two others first and then I will come to that next.

The Court: Let us take Exhibit 133 for identification. It will aid me if I get the information now.

What exhibit is the Singer-Vigorelli license agreement, do you know offhand?

Mr. Elkins: Government's Exhibit 11, your Honor.

The Court: I am just writing on this exhibit for identifi- [fol. 923] cation 133 these numbers—Government's Exhibit 11.

What is the exhibit number of the Singer-Gegauf agreement of April 14, 1956?

Mr. Pettit: Government's Exhibit 26, your Honor.

The Court: And the Singer-Messerschmitt license agreement of April 16, 1957?

Mr. Pettit: Government's Exhibit 86.

* * * * * * *

[fols. 924-925] Mr. Pettit: Now I would like to have marked for identification as an aid to the Court the chart that has on it five patents, that is, the names of five patents with certain information relating to priority

date, date filed, date issued, and the machine covered by the patent, that is, the Singer machine.

The Court: This is offered as an aid to the Court.

Mr. Pettit: All of the information contained here is covered in the stipulation of facts with the possible exception of the word "none" after Harris.

I am not sure that that specifically appears but the rest of the information does, and I would set forth the paragraphs in the stipulation of facts if that will be of any aid on the chart.

The Court: Mark it for identification.

(Marked Defendant's Exhibit 134 for identification.)

The Court: So that I can make similar notations on Exhibit 134 for identification, what is the exhibit number of Gegauf No. 1, 2,832,302? I just want to mark this and have it in such condition so that if I want to look at them I can find them all at once.

• • • • • • •

[fol. 926] Mr. Pettit: Next I would like to offer for identification a statement setting forth the various conferences held and the dates of them, setting them forth by year and by month.

It starts with the Harris patent purchase conference June 9th, and it ends with the Gegauf purchase conference of December 4th, and the execution of the agreement on December 5, 1957—the first date was 1955.

This shows the spacing of the various conferences and the times that they were held.

(Marked Defendant's Exhibit 135 for identification.)

The Court: We cannot stop you from marking the paper for identification. It really should be part of a brief, but if you want to mark it for identification I cannot stop you [fol. 927] within reason.

Mr. Pettit: I am offering these because I think they will be a big aid to you in finding certain references. They are nothing else but that, your Honor.

The Court: I appreciate your motives, and I am grateful to you.

Mr. Pettit: Even in the discussion it is very hard to point out or state just when it falls.

The Court: All right.

Mr. Pettit: The chart setting forth the Gegauf 1 claim and the Harris claim I would like to have marked for identification—I do not believe that has been marked.

(Marked Defendant's Exhibit 136 for identification.)

Mr. Pettit: And finally I would like to offer for identification the chart showing first the mechanical elements of Gegauf Patent No. 2,832,302, or, in other words, Gegauf 1. And then have the claims that are left and are now in the Harris patent—that is the purpose of this, being to show that the claims that are left are wholly subservient to the Gegauf patent.

[fol. 927a] The information with respect to it is all set forth in paragraph 29 of the statement of facts.

(Marked Defendant's Exhibit 137 for identification.)

[fol. 928] Mr. Pettit: I have, your Honor, now only two more matters to cover.

The Court: All right.

Mr. Pettit: One relates to the Sears licensing and the other relates to the elimination of Pfaff from the license agreement and assignment.

With respect to the Sears license agreement, I have already mentioned our position, that Singer was not attempting to or desiring to license Gegauf No. 2 and that this was brought about by Sears' determination for its own purpose and reason. Singer was expecting to license, wanting to license, Gegauf No. 1, believing and asserting strongly that that was the patent that covered the machine Sears wanted to import.

[fol. 929] In Government's Exhibit 107, a memorandum to Mr. Bruder dated November 12, 1958 and written by Mr. Stanford, it says in the second paragraph—in the second portion of the paragraph numbered No. 1:

> "In our opinion each of these machines (referring to Sears machine) infringes Claims 1, 5, 6 and 8 of United States Gegauf patent No. 2,832,302 and Claims 1 to 7 and 10 of Canadian Harris patent No. 552,072. It is our position that Sears model 88 employs a single

cam follower and that the addition of the individual fingers between such follower and each of the cams does not avoid infringement of our United States Gegauf and Canadian Harris patents."

In Defendant's Exhibit 63, being a letter dated November 21, 1958 written by Mr. Stelzer to Sears, Roebuck & Company, who was in charge of these negotiations, and addressed to Mr. Bruder, the following is said, it being a quotation from a letter to Mr. Stelzer from their attorney:

"In our opinion a license covering the Gritzner Model 89 machine is warranted so far as your operations in the United States are concerned. Although [fol. 930] we differ with Singer's patent counsel as to infringement of the issued Gegauf patent No. 2,832,302, we feel that the machine will probably be covered by the forthcoming Gegauf patent."

Singer then proceeded with Sears to make a contract, under Sears' insistence, that it refer to Gegauf No. 2. I point this out, your Honor, merely to show that Singer was not the owner of Gegauf patent No. 2 for purposes of licensing or enforcing. This one single use of it was done under the compulsion of the licensee's own demand made for its own purposes.

These documents obviously show that in dealing with Sears Singer was dealing in its own business interests without any consideration of or thought of Gegauf, Vigorelli or anybody else. It will be noted that Singer entered into this license agreement although it felt that it might imperil the success of the Tariff Commission proceeding. That is not a step that it would take if it considered itself operating under any obligation to anybody else, and Mr. Weinstein pointed out that this agreement was made without any conference or consultation with Gegauf.

In Government's Exhibit 108 dated December 16, 1958, [fol. 931] a letter addressed to Mr. Kircher by Mr. Stanford, the following appears:

"All concerned with the present complaint believe that the outcome of our Tariff action to a large degree

will be affected by the existence of the Singer-Sears Roebuck license agreement. Mr. Colburn believes that in order to be successful we must be able to convince the Tariff Commission that Singer plans to enter into no further licensing agreements with other importers.

"Furthermore, in view of the importance of this aspect of our case, it would appear that it is necessary for us to give the Commission (but not the defendant) a frank but succinct explanation of the Sears license. Enclosed is a draft of a Statement 'B' which has been prepared for the Commissioner's use only."

The enclosed statement, which is Government's Exhibit 109, is a letter addressed to Mr. Kircher and signed by Mr. Stanford. It is entitled "Proposed Complaint Under Tariff Act of 1930 (Rule 337)." It refers to the statement [fol. 932] being inclosed, statement "B", "which has been revised in view of the suggestions made during our conference in your office on December 22, 1958. Mr. Colburn approves of this statement."

It continues:

"You will recall that at the December 22 conference there was no unanimity of opinion as to how this Statement should be worded. However, Mr. Colburn is quite convinced that this Statement should not include any comparisons between imported Japanese and European sewing machines with regard to the damaging effects of such imports to United States manufacturers of sewing machines. In view of Mr. Colburn's rather strong feelings in the matter we recommend approval of the enclosed Statement B."

Mr. Colburn, your Honor, was the counsel in charge of the Tariff Commission proceeding.

The statement that was inclosed and the statement that was furnished is annexed to that letter and is entitled "Statement Regarding License Agreement Between Singer and Sears, Roebuck and Company."

It says:

"It has been and is the policy of The Singer Manu- [fol. 933] facturing Company to grant no licenses to

its competitors under any of its patents. In recent months, however, Sears, Roebuck & Co. of Chicago, Illinois, a long-time reputable distributor of competitive household sewing machines in the United States, and an important customer of other products manufatured by the Diehl Manufacturing Co. (a subsidiary of Singer as more fully shown on paragraph 2 of the complaint filed herein by Singer) requested of Singer an import license under several Singer zigzag sewing machine patents, including Singer Patent No. 2,832,302. Sears, Roebuck & Co. has always been a keen but fair competitor. The cost of the specific machines requested to be licensed is represented to be such as to insure their resale in the United States by Sears, Roebuck & Co. at a fair competitive level.

"For the foregoing reasons Singer felt constrained to acquiesce to a limited extent in the request for a license. Accordingly, Singer has agreed to grant to Sears, Roebuck & Co. a license for importation of automatic zigzag sewing machines from Western Germany [fol. 934] restricted, however, to a specific model of such machine manufactured only by Gritzner-Kayser A.G. A copy of such agreement is attached hereto."

The concluding paragraph says:

"Singer has no intention to grant and on the contrary, in accordance with its normal policy, will not grant any other licenses under any of its zigzag sewing machine patents."

Mr. Gegauf's reaction to that was not that we had violated any arrangement with him, but it was a mild protest: if he shouldn't have been considered in the bargaining. By letter of March 6, 1959 he wrote to Mr. Waterman. This is Defendant's Exhibit 57:

"Owing to the fact that your complaint is mainly based on the Bernina patent we ceded to you, I take the liberty to kindly ask you why you will be granting a license for the automatic zigzag machine of Gritzner-Kayser. The Sears, Roebuck and Company might, if occasion arises, include in their sales programme

the Bernina sewing machine instead of the Gritzner-Kayser."

[fol. 935] I have missed reading the first three lines of Defendant's Exhibit 63 which I wanted to read and have been looking for. The first three lines of that letter say:

"As I anticipated, we have encountered sharp differences of opinion between your legal counsel and ours in regard to the Gegauf patents reading on our No. 89 German-made automatic machine."

The Court: Is there any evidence that Bernina had been a previous seller to Sears, Roebuck?

Mr. Pettit: No, your Honor.

The Court: Was this defendant's Exhibit 57 responded to by Waterman? Was there an answer to Gegauf?

Mr. Pettit: Responded to by Singer?

The Court: Yes.

Mr. Pettit: I have never seen one myself.

The Court: It is not in the record, is it?

Mr. Pettit: No, sir. I am advised that there is none.

Now, your Honor, I think the Sears situation shows quite clearly Singer's independence from anybody else, and there is no indication whatever as to Singer having made any agreement with anyone to do anything or not [fol. 936] to do anything.

The final group of documents relates to the elimination from the agreement of the reference to Pfaff. On May 27, 1959 a letter was written to Mr. Gegauf from Mr. Waterman Government's Exhibit 130. A previous draft of this letter dated May 21, 1959 is Government's Exhibit 129. I believe that they are identical. Government's Exhibit 130 reads:

"As we previously advised you, we have instituted a proceeding before the United States Tariff Commission in an endeavor to prevent the importation into the United States of all non-licensed sewing machines which would infringe our Gegauf Patent No. 2,832,302."

The first point to notice in this is that it refers to all non-licensed sewing machines.

> "During a recent hearing before the Tariff Commission, Singer was asked by the Commissioners if Pfaff of Germany was licensed under Gegauf Patent No. 2,832,302 so that it could freely export infringing machines to the United States.
>
> "We advised the Commissioners that Pfaff had no [fol. 937] such license, and it was not contemplated that such a license would be extended to Pfaff. However, in view of Paragraph (3) of the Singer-Gegauf agreement of December 5, 1957, our answer to the Commissioners was perhaps not too convincing."

And, your Honor, you will remember that paragraph (3) gave Gegauf the power to license Pfaff, not Singer.

> "We believe that the only way in which we can properly convince the Commissioners as to Pfaff's position in this matter is to revise Paragraph (3) of our agreement of December 5, 1957. Frankly, we think that such a revision of the agreement is quite necessary in order that we may have a better chance of prevailing before the Tariff Commission. We hope that you will have no objection to deleting Pfaff's name from our agreement."

Inclosed is the proposed form of agreement which is Government's Exhibit 131.

Mr. Gegauf answered that letter by a letter dated June 10, 1959, which is Government's Exhibit 132.

[fol. 938] He acknowledged receipt of the letter and then says:

> "As we are in no close connection whatsoever with Pfaff, we are in principal ready to conclude a new agreement with you in which all mention of Pfaff is deleted."

You will notice his statement that there is "no close connection whatsoever with Pfaff", which is a complete contradiction of the surmise made by the government that the license had been granted, and which is also a complete

contradiction of the statement made by Mr. Gegauf under oath, that we will come to later.

He says that he is in principle ready to make the agreement, but you will find that the principle has some conditions embodied.

He goes on to mention that he had "executed an agreement with Phoenix" in Germany, and he thought and our counsel thought that that agreement had related only to Germany and did not have any effect with respect to any patent that he had in the United States.

He goes on to say

> "Since the agreement between Bernina and Phoenix dated April 5, was not mentioned in our agreement with you of December 5, 1957, because of the reasons [fol. 939] outlined above, we suggest that, in order to avoid any claims for compensation of damages Phoenix might put against us, the mention of Pfaff is deleted in the new agreement, but substituted by the mention of Phoenix."

Well, quite obviously that did not solve any problem.

On June 17, 1959, a letter was received from Mr. Kirker, which is Government's Exhibit 133.

He states in the third paragraph—and this is addressed to Mr. Stanford:

> "Bernina wrote you recently about a difficulty which arose with Phoenix. You have received a copy of their agreement with Phoenix. The writer has read the agreement and is of the opinion that it concerns Germany only and not to any foreign country."

And then on page 2 he says:

> "Nevertheless Mr. Gegauf senior would not risk a litigation with Phoenix, even if there were 90 or 99% chances in his favour."

And on the last page, in the next to the last paragraph he says:

> "Mr. Gegauf explained to us that in spite of his [fol. 940] sincere wish to help Singer, he is not in

a position to take the risk of denying Phoenix the right they claim."

The net result of that, your Honor, was an agreement by Singer to indemnify Gegauf even if Gegauf was 99 per cent sure.

Then there is the draft letter, which is Government's Exhibit 135, that sets forth a proposal on that.

And then Government's Exhibit 136, the letter of July 14, 1959, addressed to Mr. Kirker, which states at the bottom of the page:

"Although we dislike Mr. Gegauf's attitude, particularly with respect to the Phoenix agreement, we presume that he is adamant about wishing Singer to assume any damages which may result if Phoenix should bring legal actions against Fritz Gegauf A.G. on the basis of the Gegauf-Phoenix agreement."

On the next page it says:

"In view of this situation we are willing to settle this entire matter in accordance with paragraph (2) contained on page 2 of your above noted letter. In order to carry out our part of this we are enclosing an indemnification letter addressed to Mr. Gegauf and [fol. 941] signed by our Vice-President and Director, Mr. Max L. Waterman. We trust that when you present this to Mr. Gegauf he will promptly execute the newly proposed Singer-Gegauf agreement as well as prepare the suggested affidavit. As mentioned in the enclosed letter, we would like to have the affidavit prepared in the English language and contain, inter alia, a definite statement that Fritz Gegauf has never extended to Phoenix any rights in and to the United States Gegauf patents Nos. 2,832,302 and 2,877,726."

As a result of this, an agreement was prepared deleting the former provision under which Gegauf had the power to license Pfaff.

This agreement is contained in the next exhibit, Government's Exhibit 139. You will note on page 2 of it that there is an elimination of the former paragraph and the

substitution of a new one which now limits Mr. Gegauf's power to sub-license Vigorelli alone—the man who had the license right even without that provision.

Annexed to this document is an affidavit prepared and signed by Mr. Gegauf. In paragraph 2 he states, referring [fol. 942] to his previous agreement with Singer:

> "In said agreement there was introduced, under paragraph 3 and at my request that 'Singer hereby agrees not to introduce, without the consent of Gegauf, legal proceedings on the basis of the said patents against Pfaff in Germany or Vigorelli in Italy but only as far as sewing machines manufactured in Pfaff's factory in Kaiserlautern (Germany) or in Vigorelli's factory in Italy are concerned.' The sole reason for provision in favor of Pfaff, was that I have since a long time very friendly personal connections with the directors of Pfaff. I definitely state that I never extended to Pfaff any rights in and to the U.S. Patent No. 2,832,302 and 2,877,726 which derive from the said U.S. applications."

On the following page, item (4) you will find the tremendous influence of that spell—that was cast upon Mr. Gegauf across 3,000 miles of ocean—he is still affected I believe it is two years later. It says:

> "At the request of Singer and for helping them [fols. 943-948] in their fight on the U.S. market, against foreign competitors, I accepted to sign, to-day, a new agreement replacing that of December 5, 1957, and which does not contain any provision in favor of Pfaff, the following paragraph being substituted in the new agreement".

That was a very strong spell cast!

The final letter is a letter to Singer from Mr. Gegauf, and it is not good tactics to comment on a bad or dangerous point—but here I note that in the last paragraph, pursuant to the order of the Court to mark in red all portions of a document that the government deems important, I find:

> "I wish you best success for the further course of your suit and remain, dear Mr. Waterman".

Now if he just remembered to refer that back to the previous Christmas letter, we would really be in a bad way!

. . . . . .

[fol. 949] New York, May 18, 1961, 10:25 A.M.

. . . . . .

[fol. 950] Mr. Pettit: Your Honor, I would also like to present one document, copy of which I have given to the government, which is offered as an aid to the Court in compliance with the request contained in a sheet that was prepared the other day. This relates only to the first portion of that suggestion, I might say. It has to do with the description of and history of the development of various sewing machines.

The Court: Yes. *I thought it would be helpful if* we had something like that before the Court as an aid to the Court in relating the testimony that has been presented and will be presented.

Mr. Pettit: If I may, I will describe what this is. On the top page there is a listing of various sewing machines, and then to the right is the page of this document where information with respect to that sewing machine is set forth. When you turn to the information itself, it is, with one exception that I will mention in a moment, solely [fol. 951] extracts from the statement of facts, so there is no controversial point in here at all.

You will find at the top of it the machines, such as the Singer Class 206 machine. Under that you will find the exhibits that refer to that machine. You will remember that there were three in each instance, and it will be the exhibit number for the machine, for the chart and for the mechanism.

Then following that will be an extract from the statement of facts with reference to the machine. Where the machine itself is described in there as distinguished from merely stating the history of it, its manufacture, sale and

so forth, that portion that is a description of the machine is underlined.

That, again, is just a help to the Court so that, when you are interested only in the description of the machine, you can find it by looking to the underlined portion, whereas, if you want to know anything else that the statement of facts says about the machine, it will be here.

The Court: Suppose we mark this simply as a Court's exhibit, it being understood that it is simply submitted as an aid memoire.

[fol. 952] Mr. Pettit: I want to make this one comment. I did say there was one exception. We have put in a statement of our own on page 11 with reference to the old design Japanese Sankyo Seiki consolidated Model 77 machine. This is referred to in a paragraph of the statement of facts but is not described, but the machine is in evidence and the paragraph concedes that it is an infringement of or it is covered by the Gegauf No. 1 patent. Therefore the description that we have written in should be noncontroversial because it merely describes the machine.

The Court: All right. We will have it marked, then, as a Court exhibit, it being understood that it is simply an aid to the Court and to counsel.

Mr. Pettit: And I will be producing subsequently additional material. I think the next one will be with respect to the patent that you asked about.

The Court: Yes.

Mr. Elkins: It is understood, your Honor, that that is not an exhibit for evidentiary purposes?

The Court: It is not an exhibit in evidence. It is simply to assist everybody.

Mr. Pettit: It is marked for identification, I be-

[fols. 952a-960] lieve?

The Court: It is marked as a Court's exhibit, but it is understood it is simply here as an aid to the Court and to counsel to locate various matters therein described.

(Marked Court Exhibit 5.)

* * * * * * *

[fol. 961] DISCUSSION OF SIGNIFICANCE OF EXHIBITS BY MR. ELKINS

Government Exhibit 33 is dated September 3, 1956, and it followed a meeting in New York between Gegauf, Jr. and representatives of Singer. We say that at that conference there was a discussion, as indicated by Government Exhibit 33, that had to do with the same subject of Gegauf transferring his patent applications to Singer in the United States.

Following that conference Mr. Gegauf says, or his company says, "We agree that something should be done against Japanese competition in your country," and in one of the previous paragraphs he talks about the suggestion of Singer that Gegauf transfer his patents in the United States to it, and obviously we say that his willing-[fol. 962] ness to agree to do something against the Japanese competition in the United States has to do with that assignment, it has to do with the conference previously held between Gegauf, Jr. and representatives of Singer.

There is no concession as to the substance of that conference between Singer representatives and Gegauf, Jr. However, previously, when the same representative of Singer sat down to talk to Mr. Gegauf only three or four months before, not as to the assignment of Gegauf's patents but as to a less important phase of this matter, namely an agreement under which each agreed not to attack the patents or the patent claims of the other so as not to narrow them, Mr. Waterman reported as to that negotiation, "One of the strong points of our argument for the agreement between our two companies is in order to fight against this Japanese competition," and I am quoting from Government Exhibit 24.

If that was the argument on April 13, 1956, if that was a basic reason for that agreement of April, 1956, it is only fair to assume that when they sat down with Gegauf, Jr. there was no change in the theme, and certainly Mr. Gegauf indicates there was no change in the theme by the parts [fol. 963] of Government Exhibit 33 which I have already quoted.

But even assuming, without, of course, admitting, that

the Gegauf statement here was, as the defendant seems to contend, meaningless as far as Singer was concerned, we note that Singer responded immediately to the Gegauf letter by a cable and also by a letter, the cable being Government Exhibit 34 and the letter being Government Exhibit 35, and in responding to the Gegauf letter from which I have just quoted Mr. Waterman writes, "We do believe that it may be possible that we can both strengthen our positions with respect to the Japanese competition which you mentioned."

After reading such communications we wonder, if later on Mr. Gegauf has the notion that he has, indeed, an agreement with Singer whereby Singer would use his patents in relation or in conjunction with his own to exclude the Japanese, whether he isn't thoroughly justified in that conclusion.

The next documents as to which defendants have made significant comments are Government Exhibits 43, 44 and 45, and the defendant's position regarding them is that they merely present an excuse to talk to Mr. Gegauf, and again it states the idea that Singer in the United States [fol. 964] was in a position to better enforce the Gegauf patent on behalf of the licensees, and they state that in relation to documents which I am about to quote.

Government Exhibit 43 is the proposed letter to Gegauf written by Stanford, and Government Exhibit 44 is the Waterman rewrite of it. They relate to a further meeting with Gegauf and plans for that meeting, and they are dated September, 1957.

In the Waterman rewrite, as we have said before, he changes the specific references to the Japanese which were set forth in the Stanford letter. The defendant takes the position that, no, he is not referring here to the Japanese when he says to Gegauf, "When I had the pleasure of meeting you last fall, we had some discussion relative to the procedures that might be followed to enforce the patents referred to in the first paragraph of this letter when issued against infringing manufacturers who primarily are manufacturers in other countries seeking markets in the United States and more and more throughout the world." "Last fall," as used by Mr. Waterman here, refers, of course, to the fall of 1956.

Government Exhibit 35, written on September 7, 1956, [fol. 965] to Mr. Gegauf by the same Mr. Waterman, relates to meeting with Gegauf, and we have just quoted it. It is the document that says that in relation to these negotiations that are going on "we do believe that it may be possible that we can both strengthen our positions with respect to the Japanese competition which you mentioned, and I hope that we can again meet and discuss our respective situations." They did, indeed, meet again. They met in the fall of 1956, and how much of a stretch of the imagination is it to say that they discussed the very subject that Waterman here in substance said he wanted to discuss?

And so, in Government Exhibit 44, when he makes his reference to the infringing manufacturers as I have quoted, he is, we say, indeed and specifically referring to the Japanese, and in that letter he states to Gegauf, "I think you will agree with me that neither one of us alone can protect himself most effectively."

We also notice that in this letter to Mr. Gegauf, we say now, that apparently Mr. Gegauf has got it in his mind that Singer is contemplating some kind of an agreement that extends beyond anything that is to be or will be in writing, and here Mr. Waterman, in writing to Gegauf, [fol. 966] after relating that Gegauf is about to receive this patent shortly and that Singer is about to receive its United States Harris Reissue patent shortly, then goes on to say:

> "We also anticipate within the near future that there will be issued to us a number of other United States patents relating to ornamental stitch sewing machines."

His reason for doing that in this letter to Gegauf is clear. Singer, of course, having a number of patents in the field, can do a better job in enforcing them if it can obtain still more, and we say that he is referring to that situation when, as I have already quoted, he went on to say that he thought that neither one standing alone could do an effective patent job.

We are concerned, as I say, your Honor, with the minds of Mr. Gegauf and of Mr. Singer and what is being created. The previous exhibit was answered by Mr. Gegauf.

in Government Exhibit 45, a letter to Waterman, in which he stated that he was looking forward to your visit in October for discussion either in Zurich or Steckborn, "regarding the mutual enforcement of our United States application and the Harris Reissue."

The defendant says that in relation to this phrase used [fols. 967-969] by Mr. Gegauf, "mutual enforcement," that it really has no meaning or, if it does, that the defendant doesn't understand what it is because it is difficult to mutually enforce patents separately.

It appears that about the best way of doing it and about the closest way that two patents or a number of patents could be mutually enforced when they relate to the same field is to put them in the common ownership, and in this case we say that single ownership is Singer. We say that is what Gegauf meant. We say that Gegauf had every right in the world, from the previous communications, from the previous conferences, to assume that that is what Singer was talking about. We say also that Mr. Waterman, the addressee of the letter, knew exactly what Gegauf was talking about; that Singer knew exactly what Gegauf was talking about. So that, when they answered the letter by Government Exhibit 46, they didn't even have to ask him what he meant.

• • • • • • •

[fol. 970] It is not true as a legal matter that conspirators must merge their separate identities into a single thinking instrument. It is sufficient, as we say here, if their minds meet upon a common objective. It can be one objective. It need not relate to everything under the sun. Gegauf, as a conspirator, is not required to turn [fol. 970a] over all of his property to Singer without any compensation. Gegauf retains his particular identity. The common objective is there. We submit that he is joining in it, as is Singer joining in it, and that these conditions have nothing to do with the common objective except, before stepping into this common objective, certain conditions must be met.

[fol. 971] We do not insist—we do not say—we do not have to say that Singer and Gegauf merged, as we have

put it, into a single identity. They did not get merged, your Honor. We don't say that they did.

The Court: But you do say that the purpose of the Gegauf assignment and the purpose of the Gegauf agreement was a mutual purpose jointly shared in by Gegauf and Singer, that that purpose was to restrain Japanese competitors so that they can no longer sell their machines in the U. S. A.

Mr. Elkins: That's right, your Honor.

The Court: Doesn't the remark that is attributed to Gegauf on page 3 of Government's Exhibit 56, in the last paragraph, negative such a purpose? Doesn't that demonstrate that Gegauf's purpose was to get some money for themselves, that Singer's purpose was to acquire it so that they might perfect title and validity, so that their pending United States patents, they might be in a position to assert it against all infringers, including the Japanese, so that one thing that might result is not the common purpose that motivated the assignment or the agreement.

Mr. Elkins: With that, your Honor, we cannot agree. The paragraph you are referring to, I believe, begins with [fol. 972] "To this remark"?

The Court: That's right.

Mr. Elkins: We believe that Gegauf is saying that if pursuant to this arrangement with Singer, Japanese competitors can no longer sell their machines in the United States, that they will try to sell them in Europe, and that when they did come into Europe that will be a drawback for Gegauf. The picture he presents here

The Court: Gegauf says, "It will not serve our purpose to have these Japanese machines stopped from being imported into the United States when they are going to flood our own markets here in Europe."

Mr. Elkins: Gegauf sells in Europe.

The Court: "We don't want to stop the Japanese machines so far as we are concerned," Gegauf says, "from being imported into the United States."

Mr. Elkins: Oh, we disagree completely with that, your Honor. He does not say that he does not want that, and he has, we submit, stated frequently that that was the purpose.

Gegauf, as we have just said, continues to have his separate identity, and he is interested in getting money—as well as his interest in getting money, some compensation [fol. 973] for his United States patent applications.

Mr. Kirker, who, the defendant tells us, merely takes directions from Singer, said to Gegauf in the previous paragraph, "Don't be upping the price of Singer, and don't be comparing what you can get from somebody else if you license others. Don't compare what you can get from licensing to what you should expect from Singer because" as he says, "Singer would merely be in a better position for acting against common competitors."

And Gegauf's response—and still talking about the amount of compensation which he should get for what he contributes to the pool—he says:

> "Well, as we understand it, that is all fine and well, but bear in mind that if you succeed in stopping the Japanese in the United States they will come into Europe, and therefore the price that we are asking for our contribution to the pool is not outlandish."

There are other documents, your Honor, that relate to that particular situation.

Government's Exhibit No. 62 is a memorandum by Mr. Stanford covering his meeting and negotiations with [fol. 974] Gegauf. At that conference it appears, in negotiating on price, the same contention, the same idea was presented by Gegauf.

As to this matter, Mr. Stanford writes:

> "To this argument I took the position that the United States was really the first line of defense and that if the Japanese were permitted to flood the United States market with ornamental stitch machines of the Bernina or Class 401 type they would become so strong and productio would be so great that they would enter th. European market in a stronger position. I further stated that protection was to be obtained in some of the foreign countries by Geganf and it seemed that a greater risk would be involved if they did not permit Singer to try and reduce the importa-

tion of the multiple-cam machines into the United States."

I was just reading from page 7 of Government's Exhibit 62.

In Government's Exhibit No. 57, Singer, through Mr. Lightner, its president, presented on page 1 of that exhibit an idea of its own, and in regard to the price that [fols. 975-976] Singer would perhaps have to pay for the Gegauf applications, stated:

> "While this may seem high, yet over the years ahead the payment of such a price may well be justified by our having the ability to stop import of very low-priced multi-cam machines, not only as a result of the help that we would have in the U. S. market in preventing such import, but also because inability to enter the U. S. market may discourage some people from entering the field, and raise unit costs in the case of those who do produce such machines for other markets."

So we see nothing particular, your Honor, other than what we have already stated, in relation to the statement by Mr. Gegauf, and it appears, as the other documents set forth, that it was finally understood that the United States would be the first line of defense.

. . . . . .

[fol. 977] Now, Defendant's Exhibit No. 55 is a letter written by Mr. Stanford to Mr. Waterman, and it is di-
[fol. 978] rected to the Gegauf letter to which we have just referred.

In the previous documents it was certainly indicated that Mr. Waterman was quite active in Singer, particularly in relation to the Singer-Gegauf negotiations. Now we notice that the Gegauf letter to which we just referred, was referred by Mr. Waterman to Mr. Stanford, and in spite of the clear statements made by Gegauf as to the conspiracy, as we call it, Mr. Waterman did not bat an eyelash when he read it—he has been through most of

the negotiations, as the documents disclose, with Gegauf, and in relation to a statement made by Gegauf:

> "During a discussion with Mr. Heimann of the Pfaff Company, he asked me whether I believe that also the Singer Company would be prepared to help that a further gaining ground of the Japanese machine on the European market be prevented in respect of patent rights. As it seems people know already that a patent arrangement was reached between the Singer Company and the Bernina and that friendly connections are existing between our Companies,"

and he then goes on to demonstrate what that arrangement [fol. 979] was, and Mr. Waterman, in referring this to Mr. Stanford, says only "Will await your comments concerning the question raised by Mr. Heimann."

Now this memo from which I just read, by which Mr. Waterman transfers or refers this Gegauf letter to Mr. Stanford, is dated August 4, 1958.

Mr. Stanford's letter, Defendant's Exhibit No. 55, is dated August 26, 1958.

At this time, your Honor, we would like to introduce in evidence the pleadings in the case of The Singer Manufacturing Company v. Brother International Corporation —and that is a case pending in this court.

(Document handed to Mr. Wesely.)

Mr. Elkins: Our only purpose for introducing it is this: to show that on August 8, 1958 Singer for the first time is charged with a violation of the anti-trust laws in relation to the subject matter, we might say, of the Gegauf letter.

The Court: Charged by whom?

Mr. Elkins: Brother International.

The Court: They are the ones who made the complaint to the Antitrust Division, aren't they—they and their counsel?

Mr. Elkins: No, your Honor.

[fol. 980] The Court: I see no objection to that. It is received in evidence without objection by the defendant.

This is the first time that anything was ever said about

any antitrust violation by any of Singer's so-called Japanese competitors?

Mr. Elkins: That is true, your Honor.

The Court: And that is what date?

Mr. Elkins: August 8, 1958. As I say, it is merely in to show that date and to show the general nature of the charge.

The Court: No, I am not going to take the general nature of the charge. We will take it for the date, and we will take it for the fact that a pleading was interposed by Brother. I am not going to take it as any evidence of the truth of any of these allegations.

Mr. Elkins: Absolutely not, your Honor.

The Court: Because frequently it becomes a common practice, as you know—or perhaps you do not know—it has become quite a common practice to have these antitrust defenses interposed in private litigation, on the slightest pretext—and often without any pretext whatever—in order to delay or complicate the trial. That is one of the [fol. 981] serious problems of judicial administration.

Mr. Elkins: We have no intention, your Honor, of offering it to establish the truth of the assertions, but we do offer it for the purpose of showing the nature of the charge, that is all.

The Court: It is received without objection.

(Received in evidence as Government's Exhibit 198.)

Mr. Elkins: In the pleadings, Singer was charged in a counterclaim in paragraph 31, which states:

> "This Counterclaim is an action between citizens of different states for violations of the Anti-Trust Laws of the United States and for unfair competition."

Details are supplied on page 11, and it is charged that Singer "combined, conspired and agreed with others to gain control over and pool the major patents upon sewing machines, thus hampering competition and restraining trade and commerce in sewing machines and attempting to monopolize the sewing machine trade and commerce among the several states and foreign nations."

We point out, your Honor, that Mr. Stanford—or that Mr. Waterman referred this letter to Mr. Stanford on Au-

[fol. 982] gust 4, 1958; that four days thereafter the pleading was served on Singer, charging it with a violation of the antitrust laws by virtue of patents and by virtue of pooling the patents—and of course the only patents or the principal patents involved were those of Gegauf.

So it is only under those conditions that Mr. Stanford sits down to write this letter, which is Defendant's Exhibit 55, and concerning which we say it is completely, thoroughly self-serving and entitled to no probative value.

Now in Defendant's Exhibit No. 55, Mr. Stanford on the first page writes:

> "Mr. Gegauf infers that a patent arrangement has been reached between Singer and Bernina. This implies that we have some type of patent arrangement with the Bernina Company."

Now thus far Mr. Stanford agrees substantially with us—not completely. We say that not only did Gegauf infer that the agreement, the arrangement, but we say that he actually expressed it.

Mr. Stanford goes on in this letter to tell, by the way, Mr. Waterman, who, as we say, is certainly acquainted with the affairs of Singer—particularly as they relate to this [fol. 983] Gegauf matter, and tells him that Singer has an agreement with Gegauf under which neither will sue the other.

Now, your Honor, Waterman negotiated that contract—that is the contract of April 14, 1956. And when Mr. Stanford thinks, if he did indeed think, that he had to sit down and write a letter to tell Mr. Waterman, that he was not thinking very clearly—unless he had some other purpose—and that is what we say.

He then goes on to tell Mr. Waterman that Singer had designed or developed a 401 machine—as if Mr. Waterman were a total stranger—and he tells also that Singer spent money in developing that machine and in making tools for its production.

The Court: Suppose he hadn't written this letter of protestation of innocence—what they call in Italian criminal law "prostestacione"—if he hadn't written this, you would then argue, "Here, this letter of Gegauf came in and Singer

did nothing about it. They accepted his statements as true."

Now when you find that one of the executives in writing to another executive records that Gegauf is wrong, you say, "Ah, that is an indication of consciousness of guilt, of building up a defense."

[fol. 984] Mr. Elkins: We say this is a self-serving letter entitled to not one iota of probative value—that it is completely self-serving.

I can well imagine the picture——

The Court: I know we have to have the self-serving documents in a publicly-owned corporation where the government could come in, through any one of its numerous agencies, and get access to their files. If he didn't, he would not be a competent executive of a big company.

Mr. Elkins: As we say, your Honor, it was written solely for the files, that it does not——

The Court: Assuming for the best of reasons that it was written, I take it to be——

Mr. Elkins: That it was written solely for the files?

The Court: So that there would be on the record some statement of the true situation with regard to Gegauf, so that Gegauf's letter would not be misinterpreted by some subsequent investigator who might be bothered with unholy suspicions.

At this time we will take a recess for five minutes.

(A short recess.)

[fols. 985-989] Mr. Elkins: In Defendant's Exhibit No. 55 Mr. Stanford writes:

> "There are no cross-license agreements whatsoever and we have not agreed to anything concerning patents other than not bringing infringement action against Bernina."

As to the accuracy of the letter, and as to its general terms, it appears that there was a cross-license agreement, and it appears that Singer did agree to do something with Bernina or Gegauf, which is not set forth, and that is that it would not do anything to narrow the claims of any Gegauf application.

Now the Stanford letter goes on to conclude with the self-serving declaration that no other agreements exist between Singer and Gegauf.

. . . . . .

[fol. 990] The Court: Do you think that the writer of this letter, Defendant's Exhibit 55, wanted to set himself straight with the vice president so that the vice president would not think that he was so foolish as to make the agreement that Gegauf seemed to intimate had been made [fol. 991] by him?

Mr. Elkins: No, your Honor.

The Court: You don't think that he had that in mind at all?

Mr. Elkins: No, your Honor. No, your Honor. As far as putting Mr. Waterman straight, he certainly isn't doing it when he says "There are no cross-license agreements whatsoever, and we have not agreed to anything concerning patents other than not bringing an infringement action against Bernina." That does not set him straight. Mr. Waterman actually was present at practically all of these negotiations with Gegauf, the negotiations with Vigorelli. He missed on one negotiation, and that was the negotiation, the final negotiation, between Stanford, acting on behalf of Singer, and Gegauf as to which there are two exhibits, one of which was written by Mr. Lightner setting forth a policy statement for the guidance of Mr. Stanford and the other, Government Exhibit 62, a detailed report made by Mr. Stanford of his negotiations with Mr. Gegauf.

They were both directed to the attention of Mr. Waterman. Well, I know that at least one of them was directed to the attention of Mr. Waterman. I am quite sure that [fol. 992] Government Exhibit 62 was also directed to Mr. Waterman—yes, copy for Mr. Waterman, so that Mr. Waterman was very well informed. That report of the Stanford negotiations with Gegauf consists of 15 pages. As we say, Kirker, acting on behalf of Singer, said that the idea of it all was merely to put Singer in a better position for acting against common competitors.

Stanford, in this letter of August 26, 1958, which followed the formal charge of antitrust violation by Singer as

a result of these patent negotiations, now says in the bottom paragraph that it is Singer policy not to work "in concert with one competitor against any other competitor," and we say that that language which he now uses to protest innocence is practically the very same language that Kirker used, that of Singer being "in a better position for acting against common competitors."

We submit that when he received that information from Mr. Kirker when he was right on the scene with Mr. Gegauf, if he wanted to present material such as he now presents or presented in August of 1958, he should have done it at that time. However, better late than never. And now, if Mr. Stanford wants to set the record straight and wants [fol. 993] to put something in the files in relation to this Gegauf letter, he at least has the opportunity of doing it now. It is late, but nevertheless, there is an opportunity. So, after protesting the innocence of Singer, after protesting that the inferences made by Mr. Gegauf of any kind of a patent arrangement were thoroughly untrue, Stanford now picks up the spear and he writes on page 2 of Defendant's Exhibit 55 as to the type of answer that should be made to Mr. Gegauf, and there he writes:

> "My recommendation is that you simply acknowledge Mr. Gegauf's letter and say that we will inform him as to the final decision handed down by the Court in our suit against Brother."

He couldn't have said anything else in relation to the Gegauf letter because, we submit, the Gegauf letter was true, and the only kind of an answer that he recommends to Gegauf is that: we'll tell Gegauf about the outcome of our suit against Brother.

And on the final page of that exhibit, Defendant's Exhibit 55, we notice, by the way, the stenographic notation "in triplicate," and we suggest, your Honor, as we have been saying right along, that one copy was intended for a court.

[fol. 994] The Court: For whom?

Mr. Elkins: For a court. It was self-serving.

In relation to Government's Exhibit 67, which is a report of the Singer Patent Department for the year 1957, the defendant has taken the position that we have not con-

strued it properly. Relative to the Singer acquisition of the Gegauf patent, this report says in the second paragraph on the first page——

The Court: You might note, on the first page at the bottom, that the report was also typewritten in triplicate, and that seemed to be quite a custom of the Singer office. Do you see it?

Mr. Elkins: Yes, your Honor. We are only suggesting in relation to the "triplicate."

The Court: I know, but you cannot build up a chain of evidence that is going to rely on suspicion and suspicion alone because you have a rope of sand, and when you pick it up to analyze it it falls to pieces. There must be more than suspicions.

Mr. Elkins: We just referred to the "in triplicate" with the light suggestion that a copy was intended for the court because of our substantial contention that it is a self-[fol. 995] serving letter. "In triplicate" has no significance.

The Court: Suspicion clouds the mind and clouds the judgment if you pay too much attention to it. You have to find out what causes the suspicion and if there is any substance to it.

Mr. Elkins: There is no substance to the words "in triplicate."

The Court: That is fine. If I can get you to say that upon a number of other things, I would feel happy.

Mr. Elkins: We cannot say it as to anything else, your Honor.

The report, on the first page, says:

> "Steps were taken to strengthen Singer's patent position in the United States for multiple-cam zigzag stitch sewing machines by concluding an agreement with Fritz Gegauf A.G. of Switzerland, makers of the well known Bernina sewing machine, whereby a basic United States patent application relating to such machines was assigned to Singer."

We submit that the pat t position there referred to that was strengthened re ed to "multiple-cam zigzag stitching machines" and not merely to some particular machine of Singer. We say that the writer of this report

[fol. 996] has in mind that same thought when he continues:

> "Patents issuing on this application, grouped with other company patents, should put Singer in a better position in any attempt to prevent others from importing into the United States multiple-cam machines of the Singer Class 401 type."

Contrary to the defendant's construction, we submit that the thought here in both sentences is the same and that "Class 401 type," as used in the second sentence quoted, means machine carried multiple-cam machines.

We say, in addition to the conspiracy as we have been discussing it, that prior to entering into that—and, as we pointed out, the negotiations really started back in April, 1956, with the Milan meeting between Singer and Vigorelli and ultimately completed with the assignment on December 5, 1957—there was, as your Honor knows, an agreement between Singer and Gegauf. We say that the conspiracy as we described it, as we think the documents describe it, is an unlawful conspiracy, and we say now merely that it was aggravated by certain provisions in the [fol. 997] Singer-Gegauf agreement of April, 1956.

* * * * * * *

[fol. 998] As we have discussed various documents, and particularly the comments of the defendant in relation to what those documents seemingly indicate, at least indicate as far as we are concerned, the defendant's position was that in discussing the assignment by Gegauf of his U.S. applications to Singer that Singer was merely putting forward the position that, being in the United States, having a larger patent department, and Gegauf being three or four thousand miles away, that it, Singer, was in a better position to enforce the Gegauf patents of itself and for the benefit of the licensees, Gegauf and Vigorelli.

If that be so, and we say it is not, then Singer, after receiving the Gegauf patent applications which ultimately resulted in Gegauf 1 and Gegauf 2, engaged in the lowest and the meanest and the most despicable trick possible. If they told Gegauf and Vigorelli that they could enforce it

better in the United States, and if they used that as an argument or as a contention, and only that, to induce Gegauf to ultimately transfer his two patents to Singer in the United States, when Singer turned around immediately [fol. 999] and granted a license on both of them to Sears Roebuck from which it received royalties, as set forth in the agreed statement of facts, that approached $190,000 or so over a period of two years, as we say, that would have been conduct far below the ethical standards of Singer.

It is just not just, your Honor, to say to a man, "Give me your patents. I will enforce them for you, for your benefit, for the benefit of your licensees," then get the patents, grant a license under them and get in two years about $110,000 more than you paid for them. If that were the substance of these negotiations between Singer and Gegauf, such would have been a stunt to which Singer, we say, would not have stooped.

The Court: Why wouldn't they have stooped to it? They are in business to make an honest dollar from honest, legitimate business deals. Doesn't that demonstrate that Singer and Gegauf were dealing at arm's length and that Singer wanted to pay as little as it had to pay for the Gegauf license?

Mr. Pettit: Your Honor, may I just interject one statement here? He is stating a position that we have never taken, and I think that is grossly unfair. If we have taken [fol. 1000] that position, I don't know how in the world I could have taken that position, if I had.

We said not that we were enforcing this for their benefit. We said we wanted it because we could enforce it better. That is our benefit. We do not deny that they got an incidental benefit. But that we were telling them to give it to us so that we could enforce it for their benefit is not the fact.

The Court: You couldn't have enforced it at all in your suits if you didn't get an assignment.

Mr. Pettit: We recognize that they get an incidental benefit, but it was not for the purpose of benefiting them, and he ought to take our position if he is going to quote it.

Mr. Elkins: When I cited the defendant's position in relation to these documents, I thought, your Honor, that I

cited it quite accurately. I don't think it is awfully material. But, so that we may have the record straight—

The Court: Singer made money by acquiring this assignment and paying about $80,000 for it. Doesn't that negative the existence of a conspiracy?

Mr. Elkins: No, your Honor. The Singer license to Sears Roebuck related to a machine made in Germany. [fol. 1001] We say that the conspiracy between Singer and Gegauf related to Japanese competitors.

The Court: But, when Gegauf heard that Singer had done this, had given a license to Sears Roebuck, they screamed to high heaven. They said they screamed because Sears Roebuck might have been their potential customer, but maybe they also screamed because they foresaw the amount of royalties which Singer was about to collect from Sears Roebuck and they had not been declared in on it.

Mr. Elkins: There was nothing that Singer did with Sears, Roebuck which was contrary to the conspiracy between Singer and Gegauf. That conspiracy related to Japanese competition.

The Court: Well, there was nothing that Singer did with Sears Roebuck that tended to further this alleged conspiracy either, was there?

Mr. Elkins: That is true. It just wasn't a part of the conspiracy.

The Court: So Sears Roebuck has really nothing to do with this case, has it?

Mr. Elkins: Sears Roebuck and the reasons for our citing the documents and the material that we have shows, indeed, as other material shows—and we are here interested in the accuracy of our contentions, that [fol. 1002] European manufacturers were not a subject of the conspiracy between Singer and Gegauf. We submit that, if Singer granted a license to a Japanese manufacturer, it would have violated its agreement with Gegauf. We submit that Singer was free to grant a license to Sears Roebuck as long as the machines were coming in from Europe without violating that agreement, and the particular purpose of showing the Sears license and the amount of money that was obtained from it is to show that Singer had not taken the position with Gegauf, merely that it would use

the patent here in the United States to enforce it for the benefit of itself and Gegauf and Vigorelli.

[fol. 1003] The Court: Do you see what you would do? Suppose the Singer had not gotten this $190,000 from Sears, Roebuck. Then you might well begin protesting "Ha, this is an indication that Sears, Roebuck was dominated by Gegauf and that, although they had this assignment, they let these West German importations come in because Gegauf wanted them in."

Mr. Elkins: We would not have done so, your Honor. We would not have done so. Sears isn't the only one. We have presented to the court documents relating to Husqvarna, also a European, in which Singer indicated, well, at least not an unwillingness to grant a license to Husqvarna.

The Court: It evidently indicates a purpose to put them off as part of a general business negotiation while they were disposing of other important matters, not go give them a definitive declination or definitive no. That is all it indicated; just part of good business negotiations.

Mr. Elkins: Singer could have granted a patent license to Husqvarna, to Phoenix or to any European outfit, we say, without violating the agreement that arose between Singer and Gegauf.

I don't want to misquote the defendant's position, and [fol. 1004] I don't think it is awfully material what I have to say about it anyhow. At any rate, however, in referring to a government's exhibit in which Mr. Waterman said that it was agreed that Gegauf's patent attorney would set forth to Gegauf the advantages to all parties which would result from the Gegauf transfer, we thought that the defendant's position was represented with their statement, "Now, the government is not satisfied with the advantages that exist in licensees having a strong owner of a patent," and we honestly believe that they took the same position in relation to other documents of the plaintiff.

Mr. Pettit: Would you please state the page from which you read that.

Mr. Weinstein: Page 766.

Mr. Elkins: As to various documents of the defendant, your Honor, right now as to Defendant's Exhibit 1, dated

March 23, 1954, that is offered by the defendant to show as of 1954, obviously, that Singer had no interest in a device relating to a selective patent cam-control mechanism for use in conjunction with a family-type zigzag sewing machine. We are not concerned with 1954. This predates the period of the conspiracy substantially.

[fol. 1005] There is also in evidence from the defendant a letter in relation to a license between it and Vigorelli, Defendant's Exhibit 77, a letter to Vigorelli, in which Singer says to Vigorelli that it "would be interested in acquiring a non-exclusive license from you on any patent or patent application which you may have filed covering this feature."

We note that the letter is dated January 18, 1960, subsequent to the filing of the complaint in this case, and we do not believe that it has any probative value.

The other documents relating to the same subject matter which were written prior to the filing of this case did not specify that Singer was interested only in a non-exclusive license, and we submit that in January 1960, as far as this case is concerned, it is too late for Singer to be following the decision in U. S. v. United Shoe.

The defendant, your Honor, has referred to many documents which relate actually to a subject which is not in dispute between the parties, and these are documents showing that back in 1953, 1954, 1955, perhaps 1956, Singer was on thin ice in relation to the patent situation, that they were somewhat behind the parade, and they were [fol. 1006] scrambling to get on a firm footing as a result of licensing agreements with competing patent applicants. We do not oppose that in any way, and we say that Defendant's Exhibit 45, which is a patent report of Singer for the year 1958, roughly puts the situation in its proper place. This says:

> "With the subsequent acquisition by Singer of domestic and foreign rights under the Harris, Vigorelli, Messerschmitt and Gegauf patents and the ultimate issuance to Singer on April 29, 1958 of Gegauf's United States patent No. 2,832,302, our concern switched rather sharply from problems of defense to those of offense."

As I say, we agree with that at least to the extent, it not being in dispute, of the cross-licensing agreements.

The defendant referred to a document which related to negotiations with Messerschmitt. Defendant's Exhibit 95 is a memorandum to the file. It relates to a conference between Singer and Messerschmitt and it appears at that conference that Messerschmitt was interested in an allocation of territory between it and Singer, and as to this proposition Mr. Waterman said that it would present a violation of the antitrust laws and that, in substance, Singer [fol. 1007] was not interested in entering into any allocation of territory with Messerschmitt.

Our response to that is twofold, your Honor, one factually and the other legally. Singer is, it appears, the world leader in sewing machines, selling them all over the world, and it is quite obvious that it would never be to the advantage of Singer to withdraw from any section of the world. Also, on April 27, 1956, Mr. Stanford, in referring to Messerschmitt, indicated how much of a competitor it was to Singer when he stated in Government's Exhibit 71, talking about Messerschmitt, "Anyway, I am not so sure we need them or that we will wish to negotiate. Maybe we can push them out of the sewing machine game." [fol. 1008] Legally, of course, when we charge a violation such as we have, we do not believe that the government is required to show that the defendant violated every phase of the Sherman Act; and the fact that it did not grasp every opportunity, and even when the substance of the agreement would have been to its disadvantage, proves nothing.

The Court: It might be evidence of good reputation.

* * * * * * *

[fol. 1009] Discussion of Significance of Exhibits By Mr. Pettit

Mr. Pettit: Your Honor, it seems to me that we have heard here a continuous distortion of each letter in turn, and then, having distorted the letter, we hear an argument based on it. It seems to me it is quite unfair to proceed in that way, and I only want to make a comment on two or three of these letters to show the type of thing that they have done.

He refers to our letter of March 25, 1954, Defendant's Exhibit 1. This is the letter which shows that at that time Singer had no interest in acquiring a patent, a patent which, by the way, could block some of the non-infringing machines.

Mr. Elkins says with reference to this letter simply: We aren't interested in this period. Now, that is rather [fol. 1010] strange coming from a man who has as his Exhibit No. 1 a letter dated October 28, 1953, which he put in for the purpose of showing that Singer's predisposition at that time was not to litigate all over the world if it had an opportunity to make a cross-license agreement and to get the right to sell its machines royalty-free.

How is it that he passes off a letter with the statement that he is not interested in Singer's mental attitude at that time when he has the letter in five months before to show the mental attitude, a predisposition not to litigate?

He refers to Defendant's Exhibit 55, and he has read over, I suppose, six or seven times a sentence in there that is incorrect, and so obviously incorrect that no one could possibly conceive of it having been written to mean exactly what it says. He had drawn the cross-license agreement with Gegauf, he had been there when it was executed, and as Mr. Elkins well knows, Mr. Waterman was there, too. But he stresses this argument over and over again when Mr. Waterman says, "We have no cross-license agreement with Bernina."

As I suggested, it is so obviously incorrect that no one [fol. 1011] need kid himself that that letter was put in there intending to convey that impression. Who could it fool? The agreement was in writing. Waterman knew about it and Mr. Stanford knew about it.

Now, in referring to this letter he failed, I believe, to make any reference to the fact that exactly the same philosophy was set forth two years before. He says this is written solely for the benefit of the record. It was written, as a matter of fact, as a result of a request from the vice president of the company that he write it, and it happens to contain exactly the same philosophy that was expressed two years before.

The Court: I already looked at that other exhibit.

Mr. Pettit: That was not mentioned.

With reference to Defendant's Exhibit 77, a letter of January 18, 1960, in which Singer took the non-exclusive license from Vigorelli, as he did not make any reference before to the detailed examination that Singer made with reference to the merits of the machine in order to determine whether they wanted to use it, he similarly ignores any reference to that now, even though the matter appears right [fol. 1012] in the letter that he was discussing.

In this letter to Vigorelli it says:

> "And our conclusion is that we will not embody the mechanical features of the machine which you submitted to us in our present machines."

Now, obviously concluding that they would not put it in their present machines, they protected themselves by a license. But, if it is any consolation to Mr. Elkins and he would like to have it on the record, I will tell him that Singer would not run from its normal business because of this litigation and, if Singer had decided to put that mechanism in the machine, Singer would have bought it.

He refers to Defendant's Exhibit 95 and he reads from the first portion of it, and, of course, Singer is wrong whichever way it goes. When it makes clear statements showing that it does not want to violate the antitrust laws, well, then, there is also something wrong with that. That is just because it doesn't happen to do any good to violate the antitrust laws. Otherwise they would love to do it.

But he failed to point out something right after that that is in the same paragraph that he could very well have used [fol. 1013] if he cared to present the full picture. He points out another viewpoint that Singer had, and it says that agreements must be made complete and according to the truth because he would, when questioned on the completeness of the agreement, not be able to declare with a good conscience that no additional arrangements have been made.

Maybe Mr. Elkins can find some general reason that was applicable at that particular time. He didn't bother to point out the fact, and I don't know what explanation he would have for that, but there is the clear statement covering the policy of the company and Mr. Waterman's policy

that deals right squarely with Mr. Elkins' main issue in this case, and he doesn't even refer to it.

Now, your Honor, I could go along from document to document, as I promised you I will not. I am merely saying that there is not a document he refers to that is not in some way distorted or made into some misleading conclusion from it, and we have been over it once before so there is no point in going over it again.

We have here the normal situation of businessmen, having obviously quite different objectives, fighting each other at arm's length, Singer wanting the machine so that it [fol. 1013a] could enforce it against everybody, and he even asks the question—I might just say in closing—why Singer didn't write to Gegauf and tell him that Singer would not enforce the license against the Japanese. How in the world could it write a letter that it was not going to enforce the patents against the Japanese when it had every intention of enforcing the patent against everybody? [fol. 1014] Mr. Pettit: Your Honor, I would like to ad- [fol. 1015] dress myself to one point that was made as to the defendant's position.

Defendant never once has stated—and it is hard to make a statement in this long record, but certainly I do not believe that there is the semblance of a statement by us that we told Vigorelli or Gegauf that we wanted this patent to enforce it for their benefit, or that we ever once told them that we would enforce it for their benefit.

The defendant wanted that patent and told them that they wanted that patent because the defendant has a tremendous business in this country—150,000 machines against 400 for Vigorelli and 150,000 for—around 1,600 for Gegauf—that Singer could better protect itself and to enforce the patent better—and that was the reason that it wanted the patent.

Now I think we can all recognize that Singer, having the patent, certainly people would get incidental benefits, but that had nothing to do with Singer's motives or promises or purpose. Its purpose was to protect Singer.

I want to call attention to the fact that not once has the government advised this court as to what was stopped by any of these patents.

[fol. 1016] They have their drawings, they have their patents. They have our drawings. They have never once done anything except to be satisfied to talk in terms of generalities about the patents that exist.

I wonder why they have never once done anything to show the court the coverage, or possibly the lack of coverage of these very patents.

Finally, in reference to the Gegauf agreement with Singer, that cited just exactly two patents: that was the Harris patent and the Gegauf patent—or I should say applications.

There isn't a single bit of correspondence about the use of patents that does not refer to those two, and those two only. And when it talks about the use of these patents, it comes only from Gegauf.

There will not be a letter found in this whole file in which Singer spoke of using the Harris patent in conjunction with the Gegauf patent.

There is a good reason for that. Gegauf did not understand the worthlessness of the Harris patent. He therefore might have assumed, because we had these cross-licenses, that when we got the patent that would issue on his, that it could be used effectively with the Harris patent. Singer knew that once the Gegauf patent was acquired, [fol. 1017] everything in the Harris patent that would be worth a nickel would be stripped out and put in the Gegauf application and the Gegauf patent. It therefore could not talk intelligently about the use of the two together. It could not talk too frankly about the fact that it was the Gegauf and the Gegauf only—because Gegauf would attribute all the more value to it because of Singer's dire need for Gegauf No. 1.

* * * * * * *

[fol. 1018] Afternoon Session

Mr. Pettit: Your Honor, with respect to two matters appearing in this morning's record, I want to get verification.

Has the government rested?

Mr. Elkins: The government has rested.

The Court: I understand the government has rested, and I will take it that a formal motion is made by the defendant to dismiss on the grounds set forth under the rules, and the court reserves decision.

Mr. Pettit: The second, I understand him to have said—and I want to make sure that I am correct—that the government's position now is that the conspiracy commenced on April 20, 1956.

The Court: That is a question addressed to the government through the court.

Mr. Pettit: I would like for it to be so understood.

Mr. Elkins: If your Honor please, we have contented to use the language of our contentions, that it began in or about 1956, and we were no more specific than that.

The evidence would indicate that it began in the early [fol. 1019] part of 1956. It certainly was going as far as Singer and Vigorelli were concerned in April 1956, and in April 1956 there was, of course, the agreement between Singer and Gegauf under which neither one would do anything to restrict the claims of the other, to limit the patent claims of the other.

I hesitate to be any more exact, your Honor, than in 1956, I would say, April, March 1956.

The Court: I think what the defendant has in mind is this—and it is a query that comes to the court's mind—apparently it is the contention of the government that the conspiracy started first between Singer and Vigorelli around April of 1956 and at that time Gegauf was not a member of the conspiracy; is that so?

Mr. Elkins: As to that part of the conspiracy to which we directed most of our remarks this morning, having to do with the assignment of the Gegauf patent applications to Singer, it began with a conference between Singer and Vigorelli, and that that conference or the first conference, as far as we know, was in April 1956.

Following that, Vigorelli, pursuant to the request of Singer, took it up with representatives of Gegauf, and it [fol. 1020] went from there with many negotiations up to the actual assignment of December 5, 1957.

In April of 1956 there was, as I say, an agreement between Singer and Gegauf under which neither one would limit the patent claims in the applications of the other.

I do not see how we could be any more specific in relation to dates, your Honor.

Mr. Pettit: Your Honor, I do not know whether he is changing the record.

I want to make absolutely certain that I understood this morning for the first time he expressly says that the conspiracy commenced April 20th. This is not a case in which it makes no difference when it began, because whether one document is in or out affects the theory of this case, and the government's theory of this case, and that is what he has been trying to avoid from the beginning to the end.

It seems to me when the plaintiff has rested we at least ou - - t to have the right to know whether a specific document is cited as a part of a conspiracy. Now it either is or it isn't, and it seems to me a very simple question to answer, if he wants to answer it. It just is or it isn't.

[fol. 1021] We have asked that from the beginning. Does he claim that the entry into the Gegauf cross-license was a part of this alleged conspiracy?

I think, your Honor, there comes a time when the court might very well direct him——

The Court: I have my own idea as to what the government contends. I do not have much doubt about it, but so that we might remove any doubt from the record, the court will propound that now as an interrogatory to the plaintiff.

Does the plaintiff contend that the April 1956 agreement between Singer and Gegauf was an act done in furtherance of the conspiracy alleged?

Mr. Elkins: It was, your Honor, and if the court——

The Court: The answer is, I take it, yes.

Mr. Elkins: That's right, your Honor, and if the court would appreciate some detail——

The Court: No, I do not want any details.

Mr. Elkins: All right.

The Court: Just answer my interrogatory "Yes." That was what I believed to have been your position.

Mr. Elkins: I could add some enlightening details if they were considered to be necessary.

[fol. 1022] In the first place, in dealing with a conspiracy, the courts——

The Court: Let us not have details, when you have made a very definite response.

Proceed.

I do not want any more details given. You have answered yes. That is an answer to my interrogatory.

Mr. Pettit: Mr. Stanford.

JOEL GIBSON STANFORD, called as a witness by the defendant, being first duly sworn, testified as follows:

Direct examination.

By Mr. Pettit:

Q. Mr. Stanford, where are you presently employed?

A. The Singer Manufacturing Company, 149 Broadway, New York City.

Q. And what is your position there?

A. Patent counsel.

Q. Are you as such the head of the Patent Department of The Singer Company?

A. I am.

Q. Will you please describe that patent department, its size and its operations.

[fol. 1023] A. There are four attorneys, three patent attorneys and 19 employees in all, including draftsmen, clerks and secretaries.

Q. And how long have you been the head of that department?

A. Since 1953.

Q. And how long have you been with The Singer Company?

A. Thirty years.

Q. And did you start in the Patent Department?

A. I did.

Q. Will you please give your background, your legal education, where you graduated from law school.

A. I am a graduate engineer from the Colorado School of Mines.

I attended Columbia University in New York City and George Washington University in Washington, D. C.

I am a graduate of the latter law school.

I am a member of the Bar of the District of Columbia, and was a Patent Examiner prior to my employment by Singer.

Q. Are you a member of the Bar of the Supreme Court of the United States?

A. I am.

[fol. 1024] Q. Just in general and in a short way, will you state the operation and functions of your Patent Department.

A. The main function of the Patent Department is to avoid infringement of patents of others, to examine machines when they are being made, and to make sure that there is no patent difficulty in the way prior to the time of starting the tooling and the inventory of a machine, and the machine.

The secondary function is to take out patents.

Q. And you keep searching for patents and patent applications in general throughout the world?

A. Yes, we do.

Q. Do you have a substantial library of patents?

A. Yes, we have quite a large library of patents.

Q. In Defendant's Exhibit 12, a letter to Mr. Evans dated August 16, 1955 from Mr. Lightner, the next-to-the-last sentence says:

> "I do not know whether I can get Mr. Stanford to return to Italy just at this time for the purpose of taking part in such negotiations, but I do know that he feels that it is very important that we make progress without wasting too much time."

[fol. 1025] Do you know or can you say whether that "Mr. Stanford" is yourself?

A. It is.

Q. And Government's Exhibit 57, dated November 27, 1957, a note by Mr. Lightner addressed to Mr. Kircher, Mr. Waterman and Mr. Bruder, says:

> "I am distributing this rough draft with a view to helping get policy formulated for Mr. Stanford on Friday."

Are you the Mr. Stanford referred to there?

A. Yes.

Q. In between those times and up to and including the execution of the assignment of the Gegauf application to Singer, did you work on and in connection with conferences, agreements, cross-licensing and assignments of various kinds?

A. I did.

Q. There was a conference with Mr. Vigorelli in November, November 16th and 17th of 1955. Did you attend that conference?

A. I did.

Q. And what was your function throughout these conferences and what was your authority and duty with respect to agreements made?

[fol. 1026] A. I was the negotiator and it was my job to make the necessary instruments or documents which could be agreed to by both sides.

Q. And was it your duty to prepare all documents covering agreements made at these meetings or conferences?

A. Yes, and to pass upon them.

Q. And was it your duty to determine the form the agreements should take when consummated?

A. It was.

Q. At this conference a cross-licensing agreement was entered into, Government's Exhibit No. 11, and also Government's Exhibit 26?

Mr. Pettit: I would like to show him various exhibits from time to time, your Honor. May I——

The Court: You may take these back (indicating). I thought I was going to look at them, but you go ahead. No, I have gone through all these.

Q. I wish you would look at Government's Exhibit 11. That is the Singer-Vigorelli cross-license agreement.

A. Did you say Exhibit 11?

Q. Exhibit 11. That is the license agreement?

A. I have it now.

Q. You have that exhibit before you?

[fol. 1027] A. I have the agreement before me, yes.

Q. Did you work on the preparation of that agreement?

A. I did.

Q. And were you attending at the execution of the agreement?

A. I was present.

Q. Who else on behalf of Singer was at that conference?

A. Mr. M. L. Waterman, Dr. Lando, Mr. Evans and Mr. Faragionni of the firm of Barzano and Zanardo, who were the Italian attorneys representing Singer.

[fol. 1028] Q. In what capacity did the latter three names attend that conference? In other words, did they have any authority to represent or act for Singer at that conference?

A. I didn't quite understand you. Mr. Evans and Dr. Lando and Mr. Faragionni.

Q. Yes.

A. No.

Q. Mr. Waterman was there also representing the company?

A. Yes, he was.

Q. And with authority to speak for it?

A. Yes.

Q. You were the only two that did have authority to speak for Singer and determine the contents and form of the agreement?

A. Yes.

Q. Now will you please turn to Government's Exhibit 26, that is, the Gegauf-Singer cross-license dated April 14, 1956.

A. Yes, I have it.

Q. Did you attend the negotiations at which this agreement was reached?

A. I did.

[fol. 1029] Q. And what is the date of those negotiations? Do you remember?

A. I am sorry, sir. I cannot give you the exact date.

Q. You have the date of the agreement there.

A. Yes, I have the date of the agreement. The 14th of April, 1956.

Q. Does that refresh your memory as to when the conference took place?

A. I would say the 12th.

Q. And what about the 14th? Was that the day it was executed?

A. Yes, there was this second meeting on the 14th.

Q. Did you prepare the agreement?

A. Yes, with the help of Mr. Kirker, the Swiss patent attorney.

Q. You conducted negotiations there with respect to this agreement?

A. I did, sir.

Q. Would you turn to Government Exhibit 86, the Singer-Messerschmitt cross-license agreement dated April 16, 1956.

A. Would you give the document again, sir?

[fol. 1030] Q. That is the Messerschmitt cross-license agreement, Government Exhibit 86. That could be in another one of the binders.

A. Yes, I have the agreement now, sir.

Q. Can you state whether there was a conference in connection with that agreement and, if so, when it was held or whether there was more than one conference?

A. Yes, there was more than one conference relative to—before the signing of this agreement.

Q. Did you attend each of those conferences?

A. Yes, I attended them all.

Q. And conducted the negotiations?

A. Yes.

Q. And did you prepare or aid in the preparation of the agreement itself?

A. I did.

Q. And attended its execution?

A. I did.

Q. At that meeting was there any discussion with respect to the possible assignment by Messerschmitt of its U.S. application?

A. Yes, there was.

Q. And you engaged in that conversation?

A. I did, sir.

[fol. 1031] Q. I wish you would look now at Government Exhibit 95, the agreement between Messerschmitt and Singer dated June 4, 1957.

A. Did you say Exhibit 96?

Q. Exhibit 95.

A. Yes, I have it.

Q. That is an assignment, is it not? Is Exhibit 95 an assignment or an agreement for making the assignment?

A. 95 is the agreement.

Q. And 96 is what?

A. 96 is the assignment.

Q. Did you prepare or aid in the preparation of these agreements?

A. Yes, I did.

Q. And are they the outgrowth of conversations taking place at the meeting to which you just referred and correspondence subsequent thereto?

A. Yes, that is true.

Q. Would you please look at Government Exhibit 58, the Singer-Gegauf assignment agreement dated December 5, 1957.

A. I am sorry. I am having difficulty finding it.

[fol. 1032] Q. Government Exhibit 58, and I would also like you to refer to 59.

A. Yes, sir.

Q. Did you engage in all the conferences that took place with respect to this assignment, Government Exhibit 58, or was there one or more that you did not attend, if you remember?

A. If my memory serves me correctly, I was present at all of the negotiations leading up to this agreement.

Q. Did you prepare or aid in the preparation of the two assignments that are Government Exhibits 58 and 59?

A. Yes, I did.

Q. The second exhibit, I believe, is a short form assignment covering the same assignment contained in Government Exhibit 58.

A. Yes.

Q. Mr. Stanford, with respect to each such agreement—and I want it understood that this question applies separately and distinctly with respect to each and every one of these documents—was any agreement made by or on behalf of Singer or any promise made or did you have any understanding with or did anyone enter into any commitment or agreement with any one of the parties to any one [fol. 1033] of these agreements that is not expressed in the agreement itself?

A. No.

Q. That applies with respect to each document which you have examined and mentioned here?

A. That is correct.

Q. And with respect to each party to any such agreement?

A. That is correct.

Q. Then do I understand that each and every agreement made with any one of these parties was encompassed and appears in the agreement with that party?

A. It does.

Q. In October, 1953, a letter was written to Mr. Davidson by you, your patent department, and I would like to know whether, before that letter was written, you had received or examined any sewing machine that you can recall to your mind now.

A. This was in——

Q. October, 1953. If you cannot remember it, do not try to answer it. I just want to know if you can remember having seen a sewing machine and, if so, which one?

[fol. 1034] A. I recall we had seen at that time a Vigorelli machine.

Q. Is that the machine that has been offered in evidence here as a Vigorelli sewing machine?

A. I don't see it, sir.

Q. I show you Defendant's Exhibit 108 and ask you if that refreshes your memory as to anything that took place at that time?

A. This appears to be the mechanism which we saw at that particular time.

Q. I show you Government's Exhibit 1 and ask you if an examination of that mechanism is what caused your writing of that letter?

A. Yes, it was.

Q. Tell me, if you remember—if you don't, you are free to refresh your memory; but, if you remember, please tell me—the conclusions you reached at that time with respect to this machine and its effect upon Singer.

A. Well, at this time we were very much concerned about the 206K machine, that is, the improvement on the 206 K machine which later became the 306 machine. We were tooling up for that machine at that particular time. We were concerned as to whether or not the particular mech-

[fol. 1035] anism in the Vigorelli machine would sustain a patent claim that might be infringed by the 306 machine, that is, the mechanism that has a manual control and a con-

nection with the needle bar as well as the removable cam.

Q. May I ask whether it was a fact that the fact that the stack of cams could be removed had made this mechanism relate to the potential 306 machine?

A. The 306 machine had a removable cam which could be moved, and this had a stack of removable cams which could be moved.

Q. Could be removed?

A. Yes.

Q. And in each instance there was then a connecting mechanism that would transmit information to the needle bar?

A. Similar mechanism.

Q. Similar mechanism in each?

A. Yes.

Q. And was your problem there whether this would affect the 306 machine, whether a patent could be obtained, rather, that might affect the 306 machine?

A. Yes, that was our first machine.

Q. Did this letter have anything to do with the 401 ma-
[fol. 1036] chine or the mechanism in it as such?

A. No, not that particular letter. May I see it again, sir?

Q. There is attached to it Defendant's Exhibit 10 which you may also look at which relates to it (handing).

A. Yes.

Q. Did you conclude and advise the company that you thought there might be some doubt as to whether this could be covered by a patent in such a manner as to interfere with the 306 machine?

A. We did, sir.

Q. Where is that contained? Is that contained in item 5 there (handing document)?

A. Yes.

Q. What is the sum and substance of that opinion and advice?

A. That we thought that we could develop a defense against any claim that might be obtained on that mechanism.

Q. And did you express some thought that, if not, you might be able to obtain a license from Mr. Vigorelli?

A. We did.

[fol. 1037] Q. And what is the significance and what did

you intend the company to believe when you said that you might be able to get a license from Vigorelli?

A. Well, if they could, or if they should get a claim that would interfere with our manufacture and sale of the machines, which, of course, we were much interested in, that perhaps we could approach them—we could approach them and get a license to go ahead with the tooling up for the machine.

Q. And did you keep continuous watch on behalf of the Singer Company with respect to patents and patent applications?

A. Oh, yes.

Q. And did you write this letter of December 2, 1954, Defendant's Exhibit 4 (handing)?

A. This was prepared for my signature, yes.

Q. And you read it and signed it?

A. I did.

Q. And what was your purpose in writing that letter?

A. We wished to obtain any information that we could relative to any prior art or prior patents that might be available, and we wished an investigation to be made along those lines.

[fol. 1037a] Q. For what purpose did you want those documents? Is it expressed here?

A. So that we might use them against any patent application that we found interfered with our machines, in the hopes that we could uncover some information along that line.

[fol. 1038] Q. Was that in the hopes that you could even destroy the patent?

A. Oh, yes.

Q. And if not destroy it, limit it?

A. Yes.

Q. So far as affected the mechanisms that the Singer Manufacturing Company was using or intending to use?

A. Yes.

Q. As a result of that letter did the company or Mr. Waterman send out letters to others?

A. That is my recollection that he did.

Q. I show you Defendant's Exhibit 6 and Defendant's Exhibit 7 and ask you if those letters were written as a result of that (handing).

A. They were, sir.

Q. They are letters, I believe, to Mr. Evans in Italy and Mr. Adamson in Germany?

A. That's correct.

Q. Do you recall either Mr. Evans or Mr. Waterman—I mean Mr. Evans or Adamson-were able to obtain any information that could help in destroying or limiting these patents at that time?

A. To my recollection they weren't able to give us any [fol. 1039] information on that.

Q. And they so wrote to you to that effect?

A. They replied to Mr. Waterman to that effect.

Q. And is that covered by Defendant's Exhibits 8 and 9 (handing)?

A. Yes, it is.

Q. By December 16, 1954 had you come to any definite conclusion as to the status of the Singer 282 Experimental Machine and the prospects of its sale in various countries, foreign and the United States?

A. You mean had the company reached a position where they wished to proceed with the machine?

Q. No. Had you in the Patent Department reached any decision or determination as to what the status of that machine would be, when and if sold in foreign countries and in the United States, patentwise?

A. I believe we made a report at that time to the company.

Q. Was it contained in this letter of December 16, which is Defendant's Exhibit 5 (handing)?

A. Yes, it is.

Q. And would you please state the conclusion that you had reached. I am speaking about your own conclusion, the Patent Department's conclusion, which you had reached [fol. 1040] at that time.

A. Well, we had reached the conclusion that the manufacture and sale of the multi-cam constructions made by Singer, devised by Singer and proposed for manufacture may result in the infringement of patents issued to others.

Q. When you say "may"——

A. Well, we were relatively sure that certain patents would probably issue in foreign countries or to others, as well as in the United States.

Q. Did you think that that would have an adverse effect on the distribution by Singer of its multi-cam machine?

A. Oh, yes.

Q. In what way?

A. Well, anyone owning the patent would be able to stop the manufacture and sale of the machine which they claimed it dominated.

Q. And did you think that there was a prospect of those claims developing in the United States as well as foreign countries?

A. Yes, exactly.

Q. And was that your advice contained in this letter, particularly on page 6?

[fol. 1041] A. That is my recollection, sir.

Q. You did write in this letter your conclusion and gave your advice?

A. Yes, this was prepared and written by the Patent Department to give our advice on the status.

Q. And you gave the advice as appears on page 6?

A. On page 6, yes.

Q. And did you intend that they should understand and did you think that they did understand that this meant that they were very likely to be running into infringement in the various places?

A. Yes.

Q. That last letter is based on certain specific information that you had looked at, is that right?

A. Yes, on the machines that we had examined—the machines of others which we had examined.

Q. And was it based on any knowledge of any patent applications any place in the world?

A. Up to this time we had not uncovered any patents that it infringed, to the best of my recollection.

Q. Had you discovered any applications that gave indication that it might?

A. At the time this report was written?

Q. Yes.

[fol. 1042] A. To the best of my knowledge, no, we had not.

Q. Had you not found a Brazilian patent application in the name of Brutsch & Company?

A. Oh, yes, yes, we had. I overlooked that one.

Q. And you had found a specific machine, such as Vigorelli, Brother, is that right?

A. That's correct.

Q. And what about the application by a Swedish firm, Husqvarna?

A. Well, I would have to see the documents.

I believe at this time Husqvarna may have filed an application in Portugal or some place.

Mr. Pettit: Your Honor, most of my documents here—I am afraid I have some handwritten notes—I mean that nobody in the world can read, but I do not want to use them——

The Court: Well, if you can read your own handwriting——

Mr. Pettit: I cannot, and I am sure he can't but I mean I may be showing these to him and there may be notes here and there.

The Court: All right, show them to him—if he hasn't seen them by now, that is strange. My clients always saw [fol. 1043] my notes. Go right ahead. Don't be worried about those things. Those things are natural in the preparation of trial. The only thing is be sure Mr. Elkins doesn't have those notes before him when he is cross-examining him.

Q. And did you, subsequent to that and in or about sometime before April 26, 1955, become aware of and examine another Vigorelli machine?

A. About that time, yes, we saw the second Vigorelli machine.

Q. The first Vigorelli machine that you saw had the stack of cams and a follower that could be moved lengthwise to the axis of the cam?

A. Yes.

Q. With means of retracting the follower from the cam?

A. Yes, shifting from one cam to the other.

Q. Shifting from one cam to the other?

A. Yes.

Q. Now the next mechanism varied from that, I believe; is that correct?

Mr. Elkins: We object, your Honor, to the leading question.

Mr. Pettit: I will withdraw it.

[fol. 1044] Q. What was the mechanism of the second machine that we are talking about, and how did it differ from the first one?

A. Why, the second machine was capable of sensing two cams simultaneously and transmitting the information to the needle bar.

Q. Was it still capable of following a single cam?

A. It was.

Q. But in addition it could track two adjacent cams?

A. Two cams simultaneously.

Q. Was that on the first machine that you had seen, other than our own, that had the capacity to take information from two cams at once?

A. That is the first machine that I had seen other than our own.

Q. Were you at that time aware of any patents owned by Vigorelli with respect to either or both of these mechanisms?

A. Well, I can't pinpoint that, sir, without the necessary documents.

Q. I show you a letter dated April 25, 1955 to Mr. Waterman and by yourself, Government's Exhibit 2 (handing). [fol. 1045] A. Yes. At this time we had located the Vigorelli-owned Italian patents which showed these two machines.

Mr. Pettit: I am sorry. Will you repeat the answer, please.

(Answer read.)

Q. At that time did Singer have pending a so-called or so-known Johnson application?

A. Yes, it was filed in '54, as I recall.

Q. What was the respective situation between Vigorelli and his patents and the Johnson application with respect to priority?

A. Johnson had developed his machine or conceived it and developed it in the United States before the filing date

of the Italian patent of Vigorelli relating to the sensing of two cams simultaneously.

On the other hand, Vigorelli had filed an application in Italy, the one that we had, which was before the filing date of the Johnson application in the United States.

Q. Was there not an Italian patent that related to the stack of cams and a single follower?

A. Yes, there was.

Q. Was the Italian patent *prior* to any patent that John-
[fol. 1046] son could get on that particular mechanism—a stack of cams with a single follower?

A. Yes, he had an earlier filing date than Johnson's conception date in the United States.

Q. And is it right, then, to say that with respect to that mechanism, the stack of cams and a single follower, as of that time, Vigorelli would have been prior to Johnson and ahead of Johnson both abroad and in the United States?

A. On the single cam follower, yes.

Q. On the single cam follower.

Now with respect to sensing information from two adjacent cams at the same time—that is what the second Vigorelli patent did, was it not?

A. Well, it was capable of doing that, but it took information from two cams simultaneously.

Q. Were they not two adjacent cams?

A. Yes, the mechanism showed that they were two adjacent cams.

Q. With respect to the idea of taking information from the two cams, was that idea also embodied in the Johnson application and in the 401 machine?

A. Yes, Johnson could take it from adjacent cams or any two cams in the mechanism.

[fol. 1047] Q. They each embodied the idea of taking information from two cams at the same time?

A. Yes, that's right.

Q. With respect to priority on that particular idea, will you state what the situation was as between Vigorelli and Singer.

A. In the United States, so far as the sensing of two cams simultaneously was concerned, Johnson had an earlier conception and reduction to practice.

In foreign countries, Johnson was behind in his filing date.

Q. Then was the situation—I want you to correct me if I am wrong on this; I want to see whether I have gotten what you said correctly—was the situation that Vigorelli would be ahead of Singer in the United States and abroad on the stack of cams and a single follower, and would be ahead of Singer abroad on sensing information from two cams at the same time?

A. I am sorry, sir, I did not quite follow the question.

Q. Then will you state to me what the situation was with reference to the priority both in the United States and abroad on a single follower and a stack of cams.

[fol. 1048] A. Vigorelli was ahead on the single follower and the stack of cams, both in the Unted States and abroad.

Q. And with respect to the taking of information from two cams simultaneously, will you state that situation.

A. In that particular situation Vigorelli was ahead of Johnson abroad but we felt that we were ahead in the United States.

A moment ago I said that we had a reduction to practice before the filing date of Vigorelli.

I want to correct that impression. It was a conception date, showing a drawing.

Q. But the net result was that Vigorelli could preclude our machine from practically all countries of the world except in the United States with respect to two followers?

A. Yes.

Q. And even though two followers couldn't be used without Vigorelli's consent because he had or would have had priority in the United States on the single follower and a stack of cams?

A. That's correct.

Q. Which had to be incorporated in the 401 machine [fol. 1049] before you could even put the second follower on it; is that correct?

A. Yes, it would be necessary to have a selection before you could have a second.

Q. And on that situation, did you write to Mr. Waterman this letter dated April 26, 1955, which is Government's Exhibit 2 (handing)?

A. Yes, we wrote this, sir.

Q. And is the information which you have just given or any part of that information set forth in this letter to Mr. Waterman?

A. It is set forth on the last page.

Q. Contained on the third page?

A. Yes.

Q. And what portion of that information is set forth there?

Mr. Elkins: May I examine this, please.

(Document handed to Mr. Elkins.)

Mr. Elkins: All right.

The Witness: May I have that question back, please.

(Question read.)

A. On the last page, page 3.

[fol. 1050] Q. And the substance of that advice relates to which portion—the stack of cams and a single follower or the two followers, the two cams?

A. Well——

Mr. Pettit: If Mr. Elkins has any objection to that letter I wish he would state it. Otherwise I wish he would sit down.

The Court: You make him nervous.

Mr. Elkins: If your Honor please, the reason I did want to see the exhibit is because——

The Court: You have a perfect right to look at any paper.

Mr. Pettit: I will show you this exhibit but sit down (handing).

The Court: He says he doesn't like you looking over his shoulder—and, frankly, I wouldn't like it if I were examining a witness.

Suppose we take a five-minute recess and we will all feel better.

Mr. Elkins: If your Honor please, when counsel gives an exhibit to the witness with a note on it, I would like to see what the witness is using for his answer.

The Court: You have a perfect right to see it.

[fol. 1051] Mr. Elkins: The note of the document.

The Court: Everything. No doubt about it. But he gets nervous when you stand so close to him.

(A short recess.)

By Mr. Pettit:

Q. Mr. Stanford, I understand that this letter was the advice to Mr. Waterman with respect to the prior art of Vigorelli and Singer relating to the sensing of information from two cams.

A. Yes.

Q. Did you shortly thereafter learn of the existence of the Harris patent in the United States?

A. We did.

Q. And did you ascertain what this Harris patent contained?

A. Yes, we did.

Q. Were there disclosures and claims?

A. We looked it over and found that it disclosed the idea of a plurality of cams with a single follower but it had not claimed it.

Q. And as you understood it, under the law was there anything you might do about it if you obtained the patent? [fol. 1052] A. Anyone who purchased the patent could reissue it within a certain length of time with broadened claims or claims directed to that subject matter.

Q. So long as the disclosure was in the application?

A. Yes, as originally described.

Q. The ability to do that was not in any way limited to Singer, was it?

A. No, anyone who purchased the patent.

Q. Anyone from Europe, anyone from Japan, or anyone from any place else who purchased it or reissued it or tried to get it reissued with the claims concerning the disclosure made?

A. That's correct.

Q. Did you talk to Mr. Waterman concerning that?

A. I did, and recommended that he purchase the patent.

Q. What were the objects or object if there is only one—I might better say "purpose" in purchasing this patent?

A. We wanted to reissue it with broadened claims so that if possible we would have protection for machines

that we were going to make here in the United States, and we also thought it would be of value for any trading pur-
[fol. 1052a] poses if we wanted to use it as such, and also that there was a possibility that we would have an opportunity to learn of any earlier-filed application relating to the same subject matter.

[fol. 1053] Q. Would you consider it would be of any advantage even if you found you could not get a patent on it?

A. Yes, we thought that we would have an opportunity to learn what others had, and at least, if we couldn't get a patent, well, maybe someone else couldn't get a patent either.

Q. When you referred to obtaining broadened patents, what did you mean by "broadened patent"?

A. Broadened patents means covering the subject matter—in this case covering the subject matter disclosed but not claimed.

Q. In the patent itself?

A. In the patent itself.

Q. So you were speaking about broadened claims compared to the claims that originally existed in the Harris patent.

A. That is correct.

Q. Did you have any concept that you could get any claim beyond these disclosures of the Harris patent?

A. Well, you couldn't. You would have to limit your claims.

[fol. 1054] Q. Did you have any intention whatever or any desire to try to get claims that were beyond those disclosed in the Harris patent?

Mr. Elkins: Object, your Honor, as leading.

The Court: Yes, it is leading, but we will permit it. You may answer.

A. Why, we had no intention of trying to claim anything other than actually was in the patent or commensurate with the state of the art at that particular time.

The Court: Is the original Harris patent in evidence?

Mr. Weinstein: Government's Exhibit 170, your Honor.

The Court: I don't like to interrupt you but, while we are on this, I would like to follow it through.

Mr. Stanford, will you examine the Harris original patent, Government's Exhibit 170, and point out the disclosure as set forth in the patent as issued and then take the Harris Reissue patent, Government's Exhibit 172, and point out to me the claim by number and the wording by line of the broadening which you say was obtained by [fol. 1055] the Harris Reissue?

Mr. Pettit: Your Honor, you would have to find that in Gegauf No. 1. That has been taken out of the Harris.

The Court: Oh, excuse me.

Mr. Pettit: You see, that claim that was put in the Harris had to go out of it.

The Court: Give him the application for the reissue. That should be in there.

Mr. Weinstein: That is Government's Exhibit 173 (handing to witness).

The Court: You would have to direct yourself to the patent as it issued, the first patent?

The Witness: The first Harris patent had four claims, and the patent itself disclosed a plurality of cams and a single cam follower.

The Court: Where is that in the patent?

The Witness: As it is shown?

The Court: Yes.

The Witness: The cam follower is——

The Court: No, I don't mean on the figures. I mean under the recitation, in the body of the patent itself.

The Witness: Your Honor, do you wish me to point [fol. 1056] out——

The Court: Just by line.

The Witness: By line.

The Court: That's right.

The Witness: It says on line 11, page 1 of the specifications, "means for automatically reciprocating the spindle comprising selecting one of a series of cams (29) mounted on a shaft (30) journal in an auxiliary frame which includes suitable bearings (31)."

The Court: And you say that that disclosure was not set forth in any claim in the patent as issued?

The Witness: Well, the disclosure of selecting one of the cams in an embroidery machine or in an embroidery producing machine, a zigzag machine, which permitted you to

select one of the cams was not put forward or was not set forth in the claims as drawn.

The Court: All right. Now show me where, in the application for the reissue, Exhibit 173, that claim was originally set forth, this additional claim. What claim number is it?

The Witness: It has been cancelled. As I recall, it was claim 21, sir.

The Court: Claim 21 on the application for the reissue [fol. 1057] as filed?

The Witness: It is the one that was put in interference with a suggestion to Mr. Gegauf in his application.

By Mr. Pettit:

Q. Would you look at claim 22, please, and claim 19?

A. Yes, I have 20 and 22. I was mistaken about claim 21 being put in interference.

Q. Will you look at claim 19?

A. Yes, I have claim 19 and claim 22.

The Court: And are those the claims, 19 and 22, in the Harris Reissue application which were intended to cover the disclosure of the original specifications—of the specifications in the original Harris patent as issued?

The Witness: Yes, claim 19 was originally allowed by the Patent Office, and then they subsequently rejected that, and it was modified and became, as I recall, claim 22.

The Court: All right.

By Mr. Pettit:

Q. And do you know the difference between claim 19 and claim 22, the substance of the difference?

[fol. 1058] A. Not without a careful comparison of the claims. As I recall——

Q. Don't guess at it.

A. Not without actually comparing the claims could I give you the exact difference.

Q. At any rate, claim 19 was first allowed. Was it suggested to Gegauf as a claim for interference?

A. It was.

Q. And did Mr. Gegauf accept it?

A. I would have to see the patent application of Mr. Gegauf, but I assume that he did.

Mr. Pettit: I think the government will concede that. Will you not, Mr. Weinstein and Mr. Elkins?

Mr. Elkins: We do.

By Mr. Pettit:

Q. That 19 was first suggested to Mr. Gegauf and accepted by him and was subsequently withdrawn by the Examiner?

A. That is correct.

Q. And you therefore prepared, or the office prepared, claim 22.

A. Yes, the Patent Office prepared claim 22.

Q. And was that subsequently suggested to Mr. Gegauf for interference?

[fol. 1059] A. It was.

Q. And did he accept that interference?

A. He did.

Q. While we are at it, I will just cover that. The claim, then, that was in interference with Mr. Gegauf in the Patent Office was a claim which the Singer patent department had itself drafted and prepared in all respects?

A. Yes, that is true.

Q. And that applies both to claim 19 and claim 22?

A. Yes, sir.

Q. At the time that you acquired this Harris patent, did you obtain anything else from Mr. Harris along with it?

A. There were some foreign patents that corresponded to the U.S. patent.

Q. And did you acquire all foreign corresponding patents?

A. All corresponding foreign patents.

Q. I show you Government Exhibit 3 and ask if you would recognize the listing on page 7 and be able to state whether those foreign applications were included?

A. Yes, they were included in the assignment of the [fol. 1060] Harris U.S. application.

Q. Upon acquisition of that patent, how promptly did the Singer Patent Department file its reissue application?

A. As soon as possible.

Q. I show you a letter of June 16, 1955, Defendant's Exhibit 11, and ask you whether, if you look at that, you can tell if it was filed by that date. Does it refresh your memory in any way?

A. Yes. The U.S. application had been filed at the time this letter was written, almost contemporaneously with this letter, as I recall.

Q. At the same time did you write to Italy for the purpose of obtaining any information with respect to your relative rights with Vigorelli in Italy?

A. We did.

Q. What were you concerned with then? What did you want to know?

A. We wanted to know what effect the Italian patent had, whether or not, because it predated Vigorelli, it could be said to dominate Vigorelli or be in a position of covering the common subject matter.

Q. And when you said "it," are you referring now to the Harris Italian?

[fol. 1061] A. I am talking now of the Harris Italian patent.

Q. And if that were so, would that change the entire situation with respect to Singer and Vigorelli?

A. Yes. Under those circumstances Harris would have been ahead of Vigorelli and would be entitled to cover the common subject matter.

Q. Did you ask about the Italian law?

A. Yes. We asked first whether or not the patent could be amended in any way or whether it was necessary to amend it.

Q. And couldn't be amended, even standing as it was?

A. It would be considered a dominant patent over Vigorelli.

Q. This Defendant's Exhibit 11 dated June 16, 1955, is that a letter that you wrote to Italy with respect to that, to Dr. Lando?

A. Yes, it is.

Q. Did you receive a reply to that letter?

A. We did.

Q. What did you consider the reply meant? When you received it, what did you conclude that the Italian law was [fol. 1062] with respect to this matter?

A. Well, first, it could not be modified, but it was not necessary in that the claims of the subject matter of the Italian patent was of little or no consequence to the court. An examination of the patent determines just what it covers.

Q. You mean the subject matter of the claim or the subject matter of the patent?

A. The common subject matter between two interfering patents. In Italy there is just a registration system with no examination; just register your patents over there.

Q. I think you said the subject matter of the patent. Did you by any chance mean the subject matter of the claim was immaterial?

A. The subject matter—I am sorry. The subject matter claimed in the patent is immaterial.

Q. But the subject matter disclosed by the patent and the description is what is important?

A. Yes.

Q. Is this the letter you received in reply (handing)?

Mr. Elkins: What exhibit number is that?

Mr. Pettit: That is Defendant's Exhibit 129, a letter [fol. 1063] dated June 22, 1955, to Mr. Stanford.

A. Yes, we received this letter, sir, or I received it.

Mr. Pettit: Your Honor, in connection with this, I would like to call attention to the stipulation that is agreed to and that has been marked in evidence relating to——

The Court: On the foreign law?

Mr. Pettit: Yes.

The Court: I have read it over.

By Mr. Pettit:

Q. As a result of your correspondence and your advice to Singer was any discussion had with respect to what should be done by Singer? I am talking about within the Singer organization now.

A. Yes. I recommended that an approach be made to Vigorelli to see if we could iron out the patent difficulties that obviously were going to arise because of the conflicting patents that existed.

Q. Did you speak to Mr. Lightner in reference to that matter?

A. I did, sir

Q. Before this letter was written did you discuss with Mr. Lightner Defendant's Exhibit 12 or did you draft it [fol. 1064] or have anything to do with this exhibit, a letter dated August 16, 1955, to Mr. Evans from Mr. Lightner?

A. Why, I discussed it with him. I did not draft this letter. I discussed it with him.

Q. Did you discuss it with him before he wrote it?

A. Yes.

Q. And did you approve the letter as written?

A. No, I did not approve this letter, sir.

Q. Did you see the form of it before it went out?

A. I don't recall whether I saw this form or not.

Q. What was the subject of your discussion with Mr. Lightner?

A. I thought that we should approach Vigorelli so as to make some form of cross-licensing agreement so that we would be free to manufacture our machines where they might have patents and they would in turn be free to manufacture and sell machines where we might have patents.

Q. Did you see a copy of this letter after it was sent to Mr. Evans (handing)?

A. I am sure that I did, sir.

Q. Does this set forth the substance of your suggestion [fol. 1065] to Mr. Lightner as you understood it?

A. It does.

Mr. Pettit: This, your Honor, is the letter which states, if I may read just the one sentence——

The Court: You don't have to read it for my information. However, if you want to, you may.

By Mr. Pettit:

Q. Do you know whether Mr. Lightner received a reply to that letter?

A. If I recall he did, sir.

Q. After that, did you take up with Mr. Lightner the question of writing again to Mr. Evans?

A. Yes, I did, sir.

Q. I show you Government Exhibit 5, a letter of September 9, 1955, from you to Mr. Lightner, and ask you to look at that letter and tell me whether you had seen a draft of the proposed letter from Mr. Lightner to Mr. Evans?

A. I had.

Q. And did you discuss it with him in any way or did you write to him about it or telephone him about it?

A. I addressed this letter to him.

Q. This was the letter with reference to the proposed [fol. 1066] draft.

A. Yes.

Q. In this letter you, I believe, suggested an addition. You say that you were opposing an application of Brutsch, and after this you say:

> "With this in mind you may feel that it is desirable to add a further paragraph to your letter to the effect that it might be well for Mr. Evans to tell Vigorelli that we have definite knowledge that at least two other well known sewing machine companies are attempting to acquire in many foreign countries patent claims which would adversely affect Vigorelli as well as ourselves, and perhaps Vigorelli and Singer standing together rather than apart could more effectively prevent these other firms from acquiring claims which might be detrimental to both Singer and Vigorelli."

Now will you state what you had in mind as to the things that might be done to prevent others from acquiring claims?

A. First we wanted to at least be in a position to talk to Mr. Vigorelli, and, second, we wanted him to know that perhaps he was not first as others had patent applications, [fol. 1067] pending, and by banding together, standing together and not apart, I meant to reach an agreement, if possible. Standing together meant reaching an agreement, or apart meant not reaching any agreement.

Q. Did Mr. Lightner write this letter, then, of September 12, 1955, Government Exhibit 4 (handing)?

A. Yes, he did.

Q. This is the letter of which you had seen the draft?

A. That is correct, sir.

Q. On page 2 it states:

"Unless we are able to come to some agreement with Vigorelli, we will, of course, institute proceedings in Italy in due time seeking to invalidate such patents as Vigorelli has received, and we will do the same thing in France and other countries in accordance with the proper procedure in each country."

Will you please state what you had that would enable you to invalidate or limit Vigorelli's claim in Italy, if anything?

A. We had the Harris patent which was prior to Vigorelli's patent on selecting of a single cam.

Q. Then did you think that it was quite possible that you [fol. 1068] could be ahead of Vigorelli in Italy on the single follower and the stack of cams?

A. We were ahead, yes. We felt that the common subject matter of the two rightfully belonged to Harris.

Q. And as a result of that, if you got into conflict, that concept you could obtain and keep in your patent rather than have Vigorelli have it in his?

A. Yes.

Q. That is, between the two of you, the common subject matter you believe is yours.

A. That is correct.

The Court: Which, of course, you wanted him to believe anyway as a good bargaining point.

Mr. Pettit: More than that.

The Court: I wouldn't try anything more than that. Let's be realistic about this.

Mr. Pettit: Your Honor, Mr. Harris was ahead of him.

The Court: I know.

By Mr. Pettit:

Q. Was that situation the same, then, in France?

A. Yes, in both countries. Part of the civil law, as I understand it. In both instances it isn't the claim; it is the subject matter shown in the patent.

[fol. 1069] Then is it correct to say that you had the idea and that you did have a chance of being ahead of him as far as that particular idea was concerned in both countries?

A. In both Italy and France.

Q. The Court suggested: didn't you want him to believe it anyway? Is that correct?

A. Of course. We would be definitely trying to get an opportunity to talk to Mr. Vigorelli.

Q. And this was all written to Mr. Evans with the objective merely of getting a conference with Mr. Vigorelli to discuss the patent in question?

A. Yes, so we could explore the situation.

The Court: Prior to this time had you ever entered into any licensing agreement whatsoever with Vigorelli?

The Witness: No, sir, we didn't even know Vigorelli. Mr. Evans did but we did not.

The Court: Evans was your attorney representing you, was he?

The Witness: Yes, he was the one in charge—yes, your Honor. He was the one in charge of the Italian company.

The Court: But this is the first time you ever entered [fol. 1070] into any patent or attempted to enter into any patent negotiation with Vigorelli?

The Witness: That is correct, sir.

By Mr. Pettit:

Q. At the bottom of that paragraph it states:

> "We, ourselves, hold some patents and have patent applications pending which would make trouble for Vigorelli if we were engaged in litigation with him or which would greatly strengthen and broaden the patent situation if our position and theirs could be pooled by some mutual agreement."

Did you have some understanding or belief as to what that meant when you read it, to you?

A. Well, we had, first, the Harris and Johnson—the Harris application and the Johnson application here in the United States that we certainly felt would make trouble for Mr. Vigorelli, and we also had a French and a British patent which we thought he was infringing.

[fol. 1071] Q. You more than thought; you were sure?

A. We knew that, yes.

Q. That he was infringing?

A. Yes. Of course it could not be determined until suit was brought, but in our opinion it was an infringement.

Q. Therefore you had not only the two patents in Italy and France but you had the Johnson application applying to the taking of information from two cams and you had the fact that he was infringing two of your patents?

A. Yes, that's correct.

Q. And did you think that they were strong bargaining points in your favor?

A. Well, certainly we thought they were bargaining points, yes.

Q. And then you wanted to present them?

A. Oh, yes, if necessary.

Q. Now it says here: "We ourselves hold some patents and have patent applications pending which would make trouble for Vigorelli if we were engaged in litigation with them, or which would greatly strengthen and broaden the patent situation if our position and theirs could be pooled by some mutual agreement."

[fol. 1072] Had you talked with Mr. Lightner at all at any time either in connection with the prior letter or this letter as to the type of agreement that you thought advantageous?

A. Yes, I talked with him with reference to the first one.

Q. When you read this did you have your own ideas as to what was meant by this pooling of agreements?

A. I did.

Q. And did that come into your conversation with Mr. Lightner?

A. I do not know that it sprang from the conversation but I had the idea that in this particular case, it meant if we had a patent in Italy and he had a patent in Great Britain, that we would cross-license each other and in effect we would both be operating under each other's patents.

Q. Well, had you ever heard Mr. Lightner use the word "pooling"—to pool?

A. I can't say that I had, sir. I don't recall that.

Q. On October 10, 1955 Mr. Waterman received a letter from Mr. Evans, I believe—this is Government's Exhibit 8. [fol. 1073] I would like you to look at that letter (handing), and tell me from it, if you can, when you received the first

information with respect to any possible Gegauf application or patent relating to the multiple-cam mechanism.

A. Well, the cablegram came from Italy and apparently the cablegram was sent on the 7th, and it told us for the first time that Vigorelli and Bernina were currently negotiating regarding a patent on the plurality of cams.

Q. In the meantime, you had had some writing in trying to arrange a conference with Mr. Vigorelli, is that not correct?

A. That's correct.

Q. And this cable that is set forth in this letter of October 10th was then the first information received by Singer in any form as to possible patents or patent applications by Gegauf?

A. That's correct.

Q. And am I correct in saying that even at this time you knew nothing of the details other than that it related to a multiple-cam mechanism?

A. That is all—just covering a plurality of cams.

Q. Do you know when you first received any informa-[fol. 1074] tion as to the priority date of the Gegauf patent or patent application?

A. It was sometime after this. We immediately tried to get some information in regard to it because we were very much surprised that there was a patent of Gegauf.

Q. I show you Defendant's Exhibit 14 and I ask you if that was the first information Singer had received showing priority date of a Gegauf patent (handing).

A. Yes, to the best of my knowledge this is the first information we had received giving the date of deposit in Switzerland of the Gegauf patent.

Q. And even as to this date you had not received a copy of the patent itself, had you?

A. No, we had not.

Q. Do you know when you first received a copy of Gegauf's Italian patent?

A. It was sometime shortly after this letter which you just showed me was received.

Q. I show you Defendant's Exhibit 17, a letter dated October 24, 1955, addressed to Mr. Waterman from Mr.

Evans (handing) and I ask you if that will indicate to you [fol. 1075] when you received the patents from Italy.

A. Well, this indicates that the Bernina patent was being mailed from Italy on the date that this was written.

Q. And that is what date?

A. And that was October 24, 1955.

Q. By the Bernina patent in Italy, you are referring to the patent that actually existed in Italy and not to the Swiss patent; is that correct?

A. Yes, we were talking of the Italian patent of Bernina—of Gegauf.

Q. So that you still had not seen the basic-owned patent of Gegauf in Switzerland?

A. No, no, we had not seen that.

Mr. Pettit: Your Honor, if it suits your convenience, I think I would like to call it a day.

The Court: All right. I made a note in my diary for ten o'clock—is that all right for you gentlemen, tomorrow morning?

Mr. Pettit: Ten o'clock tomorrow morning?

The Court: Is that all right?

Mr. Pettit: Yes, sir.

(Adjourned to Friday, May 19, 1961 at 10.00 o'clock a.m.)

[fol. 1076] IN UNITED STATES DISTRICT COURT

UNITES STATES OF AMERICA

vs.

THE SINGER MANUFACTURING COMPANY

New York, May 19, 1961, 10 A.M.

JOEL GIBSON STANFORD resumed.

Direct examination continued.

By Mr. Pettit:

Q. Mr. Stanford, I believe we reached a stage where you had mentioned the receipt of the letter of October 24, 1955, Defendant's Exhibit 17, and you had stated that the Italian patents were being mailed—the Italian Bernina patents were being mailed, copies of it.

I show you that exhibit (handing witness), and ask you if you can refresh your memory on that or if you already know, you may testify on that. Had you received the cable before that, stating that they had been mailed?

A. Yes, we did. We received a cable saying that the Italian Bernina patent was being mailed.

Q. What steps did you take on receipt of that information?

[fol. 1077] A. Well, we immediately instituted a search in Washington to determine whether or not we could locate an assignment in Washington. We wanted to know whether or not a patent application had been filed in the United States and simultaneously with that we started to extend our investigation to other countries to see if we could get back of the date of the Bernina patent.

Q. I show you Defendant's Exhibits 19 and 21 and ask you whether Exhibit 19 was written in order to obtain that information (handing to witness)?

A. Yes, it was written to Mr. McKinnon in Japan, in charge of the Singer Company in Japan; and Exhibit 21 is is in reply or an acknowledgement of the letter, stating that investigation was being made.

Q. Did you receive a series of letters thereafter reporting on that investigation?

A. We did, sir.

Q. What was the result of that investigation?

A. They were unable to locate any further information in Japan that would be of any help to us, which was earlier than the filing date of the Gegauf patent.

Q. I show you Defendant's Exhibits 22, 23 and 25 (hand-
[fol. 1078] ing witness), and ask you if those are replies that you received as a result of that request?

A. They are, sir.

Q. And what was your conclusion as to the possibility of invalidating or limiting the claims that you were worrying about with respect to the 401 machine?

A. After reading—after receiving those letters we concluded that we had no anticipatory material which would antedate the filing of the Gegauf patent, and that as a consequence Gegauf being nine days ahead of the Harris patent, we were in serious difficulties with our 401 machine here in the United States.

Q. Now you proceeded with your negotiations with Mr. Vigorelli?

A. We did.

Q. Did you have a conference on November 17, 1955, Mr. Stanford?

A. I am not sure of the date but we did have a conference, sir.

[fol. 1079] Q. I show you Government's Exhibit 11 and ask you if that was the agreement signed at that conference.

A. Yes, this is the agreement signed at that conference.

Q. Mr. Stanford, I wish you would look at the agreement, the portion of the agreement beginning with "Each of the two parties mutually agrees not to institute" and state your then understanding of the meaning and purport of that provision and its objective.

Mr. Elkins: I object, your Honor.

The Court: Overruled.

Mr. Elkins: The agreement speaks for itself.

The Court: Overruled.

A. Why, the agreement brings out that——

Q. Mr. Stanford, I asked you for your then understand-

ing of the meaning of that agreement. I wish you would state your understanding of its purport and effect.

A. That we would not institute any opposition or nullity proceedings in countries in which that could be done, but any interference proceeding or priority determining proceeding would be carried on in accordance with the laws of the country involved.

Q. Do I understand then that you conceived that the "provided" clause dealt with United States proceedings [fol. 1080] and Canadian proceedings?

A. Yes, that's correct.

Q. Is there any place else that you know of that that clause could be applicable?

A. I know of no other place where interference or priority determining proceedings are applicable.

Q. And was it your concept and belief that the previous clause related solely to countries in which there were opposition and nullity proceedings?

A. Yes.

Q. What was your understanding as to the rules, laws and regulations of the Patent Office in the United States with respect to the conducting of priority proceedings?

A. A claim is taken from one of the interfering patents and suggested to the other interferent, giving him the opportunity to either make the claim or not make the claim, depending upon the circumstances, and it is not a requirement that he has to make the claim but he is given the opportunity to. After that is done there is a period in which preliminary statements as to the date of priority have to be filed. These preliminary statements are not opened until after the motion period. During the motion period, if [fol. 1081] you do not agree with the claims that were suggested in interference, you have an opportunity to take any action that you feel is desirable.

Q. Had you understood that at the time of the execution of this agreement?

A. Yes, sir.

Q. Had you taken a draft of this provision to Italy with you when you went there?

A. Yes, we had.

Q. Is the portion of it that is in English a provision that corresponds with the draft that you took with you?

A. It was, sir.

Q. Did you intend thereby to give up any of your rights in priority proceedings in the United States?

A. None whatsoever.

Q. Upon the execution of this agreement, Mr. Stanford, do you know whether there was any suggestion made to Mr. Vigorelli that this agreement might not be mentioned or should not be mentioned to Mr. Gegauf?

A. I believe there was mention of that. Yes, sir, I think there was mention of that.

Q. Was any agreement made with Mr. Vigorelli with respect to patents referred to in here for their use or non-
[fol. 1082] use, not embodied in this agreement?

A. No, sir.

Q. Was there any discussion at any time of a Japanese competitor?

A. No, sir.

Q. Was there any agreement that you would or would not license anybody?

A. No, sir.

Q. Any agreement that you would or would not restrict the full ownership of your own patents in any way?

A. No, sir.

[fol. 1083] Q. I show you Government's Exhibit 10——

Mr. Pettit: Your Honor, I might state that there is a little confusion here because——

The Court: No confusion.

Mr. Pettit: —I am giving to the witness documents that have no notes on them.

The Court: Go right ahead.

Q. I show you Government's Exhibit 10 and I ask you if the handwritten notes appearing there are yours (handing witness)?

A. Yes, this is my writing.

Q. You state in this "Fairweather tells me our British opposition against Vigorelli would have failed. Am glad we have agreement".

Who is Mr. Fairweather?

A. Mr. Fairweather was one of the partners of Cruik, Shank, & Fairweather, our British patent attorneys.

Q. And did Mr. Fairweather give you this advice that is reported here?

A. He did, sir.

Q. You state further that "Vigorelli claims or states that Bernina has filed an application in the U.S. corresponding to their early filed Italian patent. If this be so, maybe Harris Reissue should not be pushed too fast. [fol. 1084] Something to think about."

Why did you suggest the Harris Reissue should not be pushed too fast?

A. Well, if Gegauf had filed a patent application in the United States and if we pushed the Harris patent too fast, we might have shown our hand to Vigorelli—excuse me, to Mr. Gegauf, at an inopportune time, so it would seem best to delay the action so that we wouldn't give our position away to Mr. Gegauf—to the Bernina Company.

Q. Your position being what?

A. The date of priority on what would not only be the filing date of the Harris patent application but also any other information that we got in an interference with them and had to file a preliminary statement.

Q. Were you rather anxious about the fact that he had a nine-day priority to your application, that that not be disclosed to him?

A. Oh, yes, we were quite concerned over that.

Q. Why was that? Did you want to negotiate with him having that knowledge or without it?

A. We wanted to negotiate with him without him having that knowledge because if he had that knowledge he would [fol. 1085] have been much more difficult to deal with.

Q. I note that this handwriting note of yours is written on the back of another letter, a letter dated November 14, 1955, to Dr. Wiegand.

I would like you to read the first paragraph of that document (handing witness).

A. (After examining) Yes, I have read it, sir.

Q. Will you tell me whether you had given any instructions to Dr. Wiegand with respect to what he should do at the German patent office?

A. Yes.

Q. And what were those instructions?

A. Well, before we had the conference with Vigorelli I

talked with Dr. Wiegand, who was the German patent attorney of the Singer Company, and asked him to go to the German Patent Office and talk with the examiner concerning our pending Johnson and Perla applications, and in so doing find out whether or not the German examiner had any art which we were not familiar with—in other words, whether or not he had any prior patents that we were not familiar with.

I was seeking further information, and also that he deliver to the German examiner any references which I had given to him of which the German examiner did not have. [fol. 1086] I realized that the Patent Office was located in Munich, and that the Patent Office in Berlin had been destroyed and some of the older patents may not be in the German examiner's possession, and I wanted them in the German examiner's possession.

Q. And you requested him to give to the German examiner all the prior art which you had?

A. Yes, which he did not have and which we did have.

Q. And did this letter from Dr. Wiegand to you cause you to come to the conclusion that he had done that?

A. That was my understanding.

Q. In or about the middle of January, 1956, did you make any discovery with respect to Gegauf in his situation in the United States that stirred you into action?

A. We located an assignment in Washington which recorded the assignment of a Gegauf patent application, and judging from the dates on that we concluded that Gegauf had filed a United States application corresponding to his Swiss patent application.

Q. Now is this the first information you had that led you to believe that Gegauf in fact had filed an application in the United States?

[fol. 1087] A. This is the first concrete information that we had that such an application had been filed.

Q. As a result of that did you write this letter of January 19, 1956, Government's Exhibit 16, to Mr. Waterman (handing witness)?

A. I did, sir.

Q. I wish you would state what the conclusions were that you drew at that time as to the Singer situation and as to what should be done.

A. Well, we had just been unofficially advised that our application had claims in it that were ready for allowance and that we felt that an interference might be set up with Mr. Gegauf, and we recommended that immediate action be taken in an attempt to reach some agreement with Mr. Gegauf as to the patent situation so that we could feel that we were free to go ahead in the United States with our 401 machine, which was the basis of our production here in the United States.

Q. Did you so advise Mr. Waterman?

A. I did.

Q. *Did you state there that the Patent Office had unof*ficially advised you that your claims were allowable?

[fol. 1088] A. That is in the letter.

Q. Well, is that a fact?

A. That we were unofficially advised?

Q. Yes (handing witness).

A. "Several weeks ago the U.S. Patent Office unofficially advised us that the claims of our U.S. Harris Reissue patent application are allowable over the known issued patents."

Q. Then your information was such that you believed that if Gegauf had filed a claim he would obtain a patent on that claim that covered your 401 machine?

Mr. Elkins: May I ask that the question be repeated, Mr. Reporter.

(Question read.)

Mr. Elkins: Your Honor, this is a leading question.

The Court: It is leading. You can ask him—frame it another way—"Did you believe".

I would permit that because you are entitled to elicit from this witness categorical denials of the alleged wrongdoing. Therefore you may lead him to the extent of draw-
[fol. 1089] ing his attention to the specific charge, for the purpose of securing a categorical denial.

Mr. Pettit: Your Honor, in further defense, I want to point out that most of these letters are set forth in the statement of facts, and therefore——

The Court: Well, technically, the way the question is worded, it is leading.

I suppose that in view of the fact that you charge the

defendant, and specifically this witness acting for the defendant, with wrongdoing——

Mr. Elkins: That is right, your Honor.

The Court: He is on the stand and as part of his direct examination the examiner is entitled to elicit categorical denials of the charge of wrongdoing, and those questions are naturally leading, to the extent that there is a statement of the charge and he may inquire directly as to whether or not he had the purpose of accomplishing the alleged wrong.

I think in view of the nature of the charge I am going to permit leading questions of this nature which are intended to secure categorical denials or admissions.

Mr. Elkins: If your Honor please, if the questions related [fol. 1090] to the essence of the government's contention at all times, that would be one thing, but we get in on the periphery as to facts which are not specifically within the government's contentions, and as to those we do not believe that the witness should be led.

The Court: Well, when we come to those instances we will ask the examiner not to lead the witness, but on this specific question the objection is overruled.

Read the question to the witness and we will take his answer.

(Question read as follows:)

"Q. Then your information was such that you believed that if Gegauf had filed a claim he would obtain a patent on that claim that covered your 401 machine?"

A. I believe that if the claim which was allowable in the Harris application was suggested to Mr. Gegauf and that he made the claim or copied the claim, that it would be allowable.

[fol. 1091] Q. I will read to you one passage from this letter and then ask you a question concerning it. It states:

> "In view of this situation, we would strongly recommend that this company attempt to work out with Bernina an agreement along the lines of the Vigorelli-Singer agreement. Our chances of negotiating such an agreement with Bernina would be greatly enhanced if we could approach them before any patent interference is declared. At the present time we feel that

we have more knowledge concerning this entire situation than does Bernina. Thus, up until the time that such an interference is declared, Singer would be in the better bargaining position with Bernina, for after declaration of the interference Bernina would, as a matter of course, be given access by the Patent Office to our Harris Reissue patent application and then would know that its application has an effective filing date nine days earlier than our Harris application."

Mr. Stanford, is that the meaning you intended to convey by your handwritten note that I read to you a few minutes [fol. 1092] ago about withholding certain patents? Is that the same principle, the same philosophy?

A. The same principle, the same philosophy.

Q. You wanted your company to conduct their bargaining with the advantage of Bernina not knowing your priority date, if that were possible?

A. That's true.

Q. Did Mr. Waterman thereupon seek to obtain any information with respect to the Vigorelli-Bernina agreement?

A. He did.

Q. And do you remember the information that the company desired?

A. I can't remember it entirely, no, sir.

Q. I show you Government's Exhibit 17, a letter dated February 6, 1956, to Mr. Baumann, and ask you to look at that.

A. Yes, I have looked at it.

Q. Was the company seeking information there? For what purpose did you want the information?

A. Before you——

Mr. Elkins: Excuse me, sir.

If your Honor please, I don't know whether that document given to the witness to refresh his recollection has, [fol. 1093] indeed, refreshed his recollection. I did not get his answer as to whether or not it did. I just want to know whether he is testifying now from a recollection refreshed or whether he is testifying from a past recollection recalled or whatever it is.

The Court: Don't you think that would be a proper sub-

ject for your cross-examination and that the proper way would be to make a little note of it on that yellow pad before you?

If this is an objection, it is overruled. The witness may answer.

A. Would you repeat the question, please.

(Question read.)

A. Whenever you anticipate bargaining with anyone, you wish to obtain all the information that you can relative to the subject, also relative to the individual that you are going to dicker with. The more information you have, the more or the better position you are in to carry on your negotiations.

Q. Can you state now or will you state now the various bits of information that you wanted?

A. We wanted to know why the monetary consideration had fallen from the sum of $160,000 or 16 million lira to nothing and why there was no monetary consideration, and [fol. 1094] we also asked for the names of the officials of the Bernina Company, who they were, and also who were—the location of the offices of the principals that Vigorelli did business with or carried on these negotiations with.

Q. And was a reply received to that letter?

A. There was, sir.

Q. This document which is Government's Exhibit 19, a letter of March 3, 1956 to Mr. Waterman from Mr. Baumann, is that the reply (handing)?

A. Yes, it is.

Q. And that incloses, I believe, a report from Dr. Lando?

A. Yes, there is a translation of a report from Dr. Lando attached to Mr. Bauman's letter.

Q. Would you turn to the first page of Dr. Lando's report, please. It says:

> "After having underlined with Mr. Vigoelli the advantages of the agreement with Singer as revealed in the Harris case, fully recognized by Vigorelli, I proceeded to ask him what were the reasons which caused the change in Bernina's attitude."

When you read that letter, did you have any understanding or belief as to what was being referred to [fol. 1095] there?

A. Well, I felt that Vigorelli, by this time

Mr. Elkins: I object, your Honor. This has to do with the thinking of the defendant as prompted by a letter written in February 1956, written by Dr. Lando, and the document speaks for itself. What he thought does not seem to be competent, your Honor.

The Court: As to what he thought and how he interpreted that letter and what actions it inspired in him or led him to take, that is material.

The objection is overruled. That, I understand, is the purpose of this question.

Mr. Pettit: Yes, your Honor. I want to show——

The Court: All right. I think I know what you have in mind.

A. At this time Mr. Vigorelli must have been notified by——

Mr. Elkins: Objection, your Honor. "At this time Mr. Vigorelli must have been notified."

The Court: Are you telling us what your reactions to this letter were when you read it?

The Witness: Yes, sir.

The Court: That you came to the conclusion that Vigorelli must have been notified?

[fol. 1096] The Witness: Notified by the Patent Office——

The Court: That is what you intended to say?

The Witness: Yes, sir.

The Court: All right.

A. —notified by the Patent Office of the interference with the Harris application and that he had realized that he was not in a position to make the claim which was suggested to him by the United States Patent Office.

Q. And do you know, Mr. Stanford, whether, several months before that, he had in effect abandoned his claim with respect to this by failing to meet the date suggested by the Patent Office?

The Court: No. Did you know, when you received this letter, that Vigorelli had already abandoned by default his right to object?

The Witness: No, I didn't know that.

The Court: You did not know that.

The Witness: I didn't know that.

Q. I would like to show you Defendant's Exhibit 59 and Defendant's Exhibit 60 dated respectively January 23 and February 6, 1956, and also Defendant's Exhibit 58, and ask you if that refreshes your memory in any respect.

A. These are letters from——

[fol. 1097] Mr. Elkins: I object. The answer is not responsive. The question was, as I recall, do these refresh his recollection.

The Court: Yes, that's right, but let's not be too technical. We don't have a jury here.

Do those letters refresh your recollection as to this matter of Vigorelli's abandonment?

The Witness: They do, sir.

The Court: With your recollection refreshed, do you want to change any testimony that you have given?

The Witness: I believe that I, a moment ago, said that I did not know whether or not the claim had been made. I see by the stamp here that we received a letter on February 16, 1956 which shows that the claim was suggested and that Mr. Vigorelli had until February 24th to make the claim, otherwise he could no longer make the claim.

Q. Did you make any suggestions to Mr. Waterman as to what should be done with reference to the Gegauf situation in about March of 1956?

A. Yes. I suggested that we proceed as rapidly as possible.

Q. On what basis did you suggest that they proceed?

A. I cannot recall the basis at the moment, sir.

[fol. 1098] Q. I show you Defendant's Exhibit 28, a letter signed by you, addressed to Mr. Waterman, dated March 8, 1956, and I ask you to state whether that refreshes your memory as to what took place at that time.

A. It does. I wrote a letter to Mr. Waterman with a proposed letter to Mr. Winteler in Switzerland and in it I said that the proposed letter—in the letter to Mr. Water-

man I said that I thought that the letter of Mr. Lightner to Mr. Evans is a very excellent letter along this line and it simply called for the granting of immunity with respect to the claims of the patent rights of both parties to the other so that each could be free to go ahead with the manufacture and marketing of the machines.

Q. What letter of Mr. Lightner's was that?

A. That was the letter of August 16, 1955 to Mr. Evans.

Q. And you were suggesting then the cross-license arrangement?

A. The possibility of a cross-license with Mr. Gegauf along the same lines as the Vigorelli-Singer agreement.

Q. At that time did anyone in the Singer organization [fol. 1099] know Gegauf or any of the personnel in Gegauf's organization?

A. Not the American company. I don't know whether Mr. Winteler knew him or not, but he probably had met him. There was no close tie-up.

Q. Was your suggested letter to Mr. Winteler?

A. Yes, the proposed letter was to Mr. Winteler.

Q. And that was the proposed letter, the draft, that was annexed to this Defendant's Exhibit 28?

A. Yes.

Q. As a result of that was a conference arranged with Mr. Gegauf?

A. It was; not as a result of this letter, but of another letter written by Mr. Waterman.

Q. You did have correspondence and a conference was arranged?

A. Yes.

Q. When did that conference take place?

A. Sometime in the spring of 1956.

Q. Do you remember the exact date?

A. No, sir, I couldn't give you the exact date of it. I believe it was sometime in April.

Q. I show you Defendant's Exhibit 30 and Government's Exhibit 24 and ask you to look at those and see if they [fol. 1100] refresh your memory as to the date of the conference.

A. Yes, sir. This was on the 12th of April 1956. It was a conference with Gegauf at Steckborn, Switzerland.

Q. And did it take place on the 13th or 14th or both?

A. I think that the conference was on the 12th, sir.

Q. When did you sign the agreement?

A. I believe that was the 14th.

Q. Will you please state what took place at that conference and the conversations that took place.

I would like for you to cover rather thoroughly the various subject matters discussed. If you need any documents to refresh your memory, you can have them.

A. I would like to have the document which you just showed me, sir.

(Documents handed to the witness.)

Mr. Elkins: Is the witness using a document to refresh his recollection, and if so, what document is it?

Mr. Pettit: Defendant's Exhibit 30 and Government's Exhibit 24.

Q. You can add to that Defendant's Exhibit 31 (handing).

[fol. 1101] The Witness: Please repeat the question.

(Question read.)

A. We——

Mr. Elkins: Your Honor, I think we have a right to know whether the documents have refreshed the recollection of the witness.

The Court: You will cross-examine him on that. That is a matter for cross-examination, don't you think? Apparently the witness at this stage is looking at a paper, and that is obvious because he is doing it in front of us.

Mr. Elkins: And the record will show that?

The Court: If the record does not show that, you make sure that it shows it because the stenographer won't put it down unless you embody it in a question. You, being an experienced and able trial man, know that that is the proper procedure.

A. We arrived in Steckborn in the morning, and Mr. Gegauf was quite interested in showing us his plant. He was very proud of it, so we spent the morning going through the plant. The reason he wanted to show us through in the morning was that materials were very hard to get and he was only able to work on a short shift. So,

after going through the plant, we had lunch and started the [fol. 1102] discussions in the afternoon, in the early afternoon, and we discussed sewing machine problems in general, the Turissa machines made in Switzerland and also the Helvetia machine which was made there, and we discussed various situations in the sewing machine field.

We got around to talking about the Japanese competition, and Mr. Gegauf expressed concern over it, and we, of course, used that—having that opportunity, used that as a lever to say that we felt that we shouldn't be fighting amongst ourselves, that it would only delay the issue of the patents, and that we would be wasting our time and energy fighting each other, and that we should go ahead and get our respective patents so they could be enforced by whoever would own the particular patent.

Present at this meeting was Mr. Gegauf and Mr. Gegauf, Jr. and some of the members of his company, and a patent attorney for us, Mr. Kirker, and also Mr. Waterman and Mr. Winteler.

We could not talk directly with Mr. Gegauf because Mr. Gegauf doesn't understand English, and unfortunately I do not understand German, so that all the conversation had to go through Mr. Kirker. First I would say to Mr. [fol. 1102a] Kirker the things that I wanted him to say to Mr. Gegauf and then Mr. Gegauf would in turn say to Mr. Kirker in German what he wanted to convey to us. [fol. 1103] This took quite a long time, and it is very slow when you have the problems of language barrier.

So the conference lasted quite a long time and ultimately they requested us to go down to Lake Geneva and look it over while they prepared a statement of intention, as they call it. It was a statement in which they set forth their ideas of just what should be in any agreement between Singer and Mr. Gegauf.

After getting this statement of intention——

The Court: Then you went to Geneva, did you? You went to see the lake?

The Witness: We went to see Lake Constance——I am sorry, Lake Constance. Steckborn is on Lake Constance.

The Court: Suppose at this time we take a recess for about five minutes.

(Recess)

The Court: You last told us you went over to the lake.

The Witness: Yes. We went over to the lake and when we returned they had prepared this, what they call a declaration of intent. And Mr. Gegauf throughout the entire proceedings seemed to be very suspicious of Singer, [fol. 1104] and he took the position that his situation was much superior to ours, "otherwise you would not be here" —in effect—"Why are you here?"

And he seemed to feel that we wanted to copy his machine.

The Court: What gave you the impression that he was suspicious of Singer? What did he do or say?

The Witness: Well, he said that he had a very fine machine and he did not want anyone to copy it, and he wanted a special provision, that is, if he entered into this agreement with Singer, that we would not make a copy of this machine.

The Court: This was all conveyed to you through Kirker as the interpreter?

The Witness: Yes.

The Court: Go ahead. What else happened there?

The Witness: After we talked with them and they showed us this declaration of intent and we departed for Zurich, Mr. Kirker going along with us, we—Mr. Kirker and I, discussed the matter of drawing up an agreement with Mr. Gegauf—and I tried to conform as much as possible [fol. 1105] along with this so-called declaration of intent.

Now the day before we went to see Mr. Gegauf I had talked with Mr. Kirker, and I had taken up with him the question of whether or not he felt that the Swiss Bernina patent was infringed by Singer, and whether or not the material that we had brought over, anticipatory material was good, and he had advised Singer that it was his opinion that it was highly desirable that we enter into an agreement with Gegauf so far as the Swiss patent was concerned.

We had not seen the Swiss patent until we got Mr. Kirker to get it from the Swiss Patent Office, and he showed it to us.

Mr. Kirker and I then proceeded to draw up an agreement which finally became the agreement which was signed between Gegauf and Singer.

Q. Now, Mr. Stanford, you said that Mr. Kirker advised you that it would be highly advisable that you enter into an agreement with Gegauf.

I do not know whether you used the word "highly". He said it would be advisable to enter into an agreement with Gegauf. Did he advise you as to your relative positions, [fol. 1106] as to the validity of the Gegauf patent?

A. Oh, yes, he definitely advised me as to the validity of the Swiss patent and his opinion that it was valid.

Q. And that was the basis of his advice?

A. Yes, so far as the Swiss patent was concerned.

Q. Did you aid in the preparation of this cross-license agreement with Gegauf, Government's Exhibit 26?

A. I did, sir.

Q. I show you paragraph 1 (handing witness), and ask you if you drafted those provisions?

A. (After examining) Yes, I did.

Q. Now will you please state your belief as of that time as to the meaning and purpose of the provisions you have in paragraph 1.

A. Well, in certain countries you can bring nullity and invalidation proceedings and oppose patent applications. In certain countries they make those provisions and——

Mr. Elkins: If your Honor please, the paragraph 1 referred to in Government's Exhibit 26 plainly speaks for itself. There is no ambiguity whatsoever [fol. 1107] in it.

The Court: It does not appear to be, but I am going to let the witness answer it.

Mr. Pettit: Is the government conceding that it means just what we say in there? Because I can stop this testimony if he does, if he says——

The Court: There is no need of making any comment. I made a ruling. The witness can continue his answer.

Mr. Elkins: We will be happy to say that the meaning is clear.

The Court: No, no—sir?

Mr. Elkins: We are happy to concede that its meaning is very clear, without having elucidation by a witness some five years later as to what it says, if that is——

The Court: No, we have had enough of this. Let us have the witness' answer. We will make better time.

Go ahead.

A. (Continuing) The obvious intent of it——

Q. Mr. Stanford, I asked you as to your conclusions and beliefs as to the purpose and meaning of those clauses at that time.

[fol. 1108] A. My conclusion was that it applied only to foreign countries which had special provisions which permitted you to restrict the scope of claims of the patent.

Q. And was that your intention as to the meaning of the clause when you drafted it?

A. It was.

Q. And that is what you believed it referred to when you finished with it?

A. That is correct.

Q. Now with reference to the second portion of that paragraph, will you state your belief at that time, as to what was intended by it and as to what it would accomplish?

A. Well, that is directed to countries which have interference or priority determining proceedings, and in this particular case we put that in to take care of any situation which required a priority determining proceeding and it would be in accordance with the laws and regulations of the Patent Office concerned.

Mr. Elkins: If your Honor please, the defendant is using a document either to refresh his recollection or to read from—I am not quite sure which. At any rate, he has it before him as he testifies, as to the meaning of the con-[fol. 1109] tract, which is Government's Exhibit 26.

May I inquire as to what the document is to which he just referred in giving the meaning of Government's Exhibit 26?

Mr. Pettit: I object to that statement. The witness is not giving the meaning of the paragraph. That was not the question that he was asked—and we will get to that later.

Mr. Elkins: If it might be described——

The Court: Mr. Elkins wants to have identified for the record the document or paper that the witness looked at.

Will you tell us what paper you have before you that you looked at as you testified?

The Witness: I have a memorandum (handing to the Court).

The Court: The witness has before him Defendant's Exhibit 31.

What else? Did you look at anything else?

The Witness: The agreement (handing to the Court).

The Court: Government's Exhibit 26.

[fol. 1110] (Witness hands to the Court.)

The Court: Government's Exhibit 24.

(Witness hands to the Court.)

The Court: And Defendant's Exhibit 30.

(The Court hands back to the witness.)

The Court: Had you completed your answer? I think you had.

Q. Now was it your intention or expectation that thereby you would be surrendering any of your rights in interference proceedings in the United States?

A. No.

Q. Did you write a memorandum about the time this agreement was executed in which you mention these paragraphs?

A. Yes, I did.

Q. What document is that?

A. Defendant's Exhibit 31.

Q. Would you please designate or state what paragraphs in that memorandum deal with this paragraph of this cross-license agreement?

A. Page 2, the last paragraph and the first part of page 3—the first paragraph of page 3.

Q. Does that include the first full paragraph on page 3?

[fol. 1111] A. Not the first full paragraph. The first part of——

The Court: The sentence that you refer to, does it read "The only countries in which this clause or paragraph has any direct bearing is in Germany and Sweden"?

The Witness: Yes, your Honor, that is.

The Court: All right.

The Witness: I should, however, say—I neglected to put

in Japan here because there was a patent application pending in Japan.

Q. Now I do not know whether I understand your answer with respect to the first full paragraph on page 3.

A. It dealt with the first part of paragraph 1 of the agreement.

Q. Did it deal with the first part of paragraph 1—do you have it in front of you?

A. The agreement?

Q. Yes.

A. "Singer and Gegauf each undertakes not to do anything, either directly or indirectly and in any country, the result of which might restrict the scope of the claims of the other party relating to the subject matter of the above [fol. 1112] mentioned patents and patent applications."

Q. Which paragraph is it in your memorandum that deals with that?

A. The paragraph beginning on the bottom of page 2 and ending on the top of page 3.

Q. And what paragraph in your memorandum deals with the second part?

A. The first full paragraph on page 3.

Q. Mr. Stanford, when this agreement was entered into did you in connection therewith or anybody else in behalf of Singer enter into any agreement that is not expressed within this document, Government's Exhibit 26?

A. Not to my knowledge.

Q. Did you agree with Mr. Gegauf or anybody else on behalf of Singer that you would prosecute or use any patent that you had in any manner?

Mr. Elkins: I object to that, your Honor.

The Court: Overruled.

Mr. Elkins: The question asks the defendant as to the actions of other people representing Singer.

The Court: Yes, whether he agreed.

Mr. Elkins: And it also relates, as I understand the [fol. 1113] question, to anybody else in Singer, whether anybody else in Singer——

The Court: Did you agree? Did you make such an agreement?

The Witness: No, sir.

The Court: Do you know of anybody else in Singer having made an agreement, had such an agreement been brought to your attention or knowledge?

The Witness: No, sir.

The Court: Anybody connected with Singer ever tell you of such an agreement?

The Witness: No, sir.

The Court: Did you ever in the course of your business affairs down at Singer, going through the files or going through the records at any time, come in contact or have brought within your observation or knowledge the record of any such agreement?

The Witness: No, Sir.

Q. Mr. Stanford, I would like to know whether any agreement was made with respect to licensing any patent that you might own or obtain?

A. No, sir.

Q. Either as to whether you would or would not license anybody?

[fol. 1113a] A. No.

Q. Following the execution of this cross-license agreement, did you have a conference in Milan?

A. Yes, we went to the Milan Fair.

Q. And whom did you have a conference with and under what circumstances was it called?

A. Mr. Vigorelli—Mr. Vigorelli asked to see us when we were there.

[fol. 1114] Q. What was his purpose in calling that conference, as expressed to you at that time?

A. He wanted to discuss some problems, as I recall. I am sorry, sir but I can't give you——

Q. I show you Government's Exhibit 27 and call your attention to the second paragraph in that exhibit. Does that refresh your memory, Mr. Stanford?

A. It does.

Q. Will you please answer the question, then.

A. Mr. Vigorelli felt that now that Singer and Vigorelli and Bernina had an agreement we should act in concert with each other, and we promptly told Mr. Vigorelli that that would just be impossible, that we could not make any such agreement to take any action whatsoever, that any

action that was taken would have to be taken by the respective parties.

Mr. Vigorelli was also concerned about some infringements of his patents and we told him that we could not discuss those matters with him, that that was his own problem.

Q. Did you state that Mr. Vigorelli thought that now that Singer and Bernina and Vigorelli had made an agreement; is that what he presented to you?

A. Did I state that?

[fol. 1115] Q. Did you state that?

A. Yes, I stated that.

Q. Do you mean that he thought that an agreement had been made or is that what is reflected there?

A. No. Vigorelli and Singer had made an agreement and Singer and Bernina had made an agreement, and he felt that having arrived at those agreements we should thereafter act in concert.

Q. Did he make any reference to those being or constituting a common agreement?

A. No, he did not. No common agreement. It was three separate agreements.

Q. I ask whether he referred to it as being a common agreement.

A. No, he did not refer to it as being such.

Q. Before the execution of the cross-line agreement with Mr. Gegauf had there ever been any conversation with respect to a purchase or a possible purchase or a transfer or a possible transfer of Mr. Gegauf's application to Singer which had been carried on with Mr. Gegauf?

A. Any mention made to Mr. Gegauf?

Q. Yes.

A. No, no mention had been made to Mr. Gegauf of any [fol. 1116] possible purchase of his patent.

Q. So that at the time that he signed the agreement he had not heard a suggestion or mention even of the possibility of the transfer of his application to Singer?

A. No, he had not.

Q. And was that fact recorded by you in a memorandum that you prepared?

A. The last paragraph on page 6 of Defendant's Exhibit 31.

Q. That was a memorandum prepared by you, was it?

A. Yes, that was prepared by me on——

Q. On what date?

A. April 15th, the day after the agreement with Mr. Gegauf.

Q. Do you know whether a similar memorandum was made by Mr. Waterman?

A. On this date?

Q. No, at any time near this date.

I show you Government's Exhibit 27.

A. I have that before me, sir.

Q. I ask you to turn to the second page of that document.

A. Yes. In paragraph 2 of this memorandum prepared [fol. 1117] by Mr. Waterman.

Q. So both you and Mr. Waterman were in agreement that neither of you had mentioned anything about the possibility of transfer?

A. Yes, that is true.

Q. At this conference in Milan. I wish you would state what was said with reference to the subject matter set down in the second full paragraph on page 2 of Mr. Waterman's Memorandum, being Government's Exhibit 27.

A. We had a language barrier here in that we could not talk with Mr. Vigorelli because he spoke only Italian and we did not speak Italian. So the conference was with Dr. Lando, Mr. Waterman, Mr. Baumann, myself and Mr. Vigorelli and his attorney, Mr. Magnoni, and I think young Mr. Vigorelli was also present, as I recall.

As the discussion was more or less over, Mr. Vigorelli's attorney, Mr. Magnoni, came over and said to me that he would like to speak in English to me. He had apologized that he spoke very little English, but he did very well, and he asked me about the situation here in the United States between Gegauf and the Harris patent, and I said that they would probably be locked in interference very shortly; that Gegauf was ahead of us and that I was [fol. 1118] very much afraid that Gegauf was going to win the interference, that I was sorry because I felt that if we had the claims and were able to keep them in the Harris patent, we would be able to enforce them better than could Vigorelli if he had a patent——

Q. Vigorelli?

A. I beg your pardon. I mean Gegauf—if he had a patent. I said that we had not broached the subject to Mr. Gegauf because we thought that if we ever did, why, the price would go sky-high and there would be no chance of reaching any agreement.

So he immediately said, "Well, I know Mr. Gegauf's attorney. I have frequent contacts with him." And he offered to approach them.

I said I didn't think that would do any good; that I thought that would be just as bad.

He said, "Oh, I won't say anything about Singer asking me or intimating to me or say anything at all about Singer." He said, "I will just let him think that it came directly from me." He said, "I think it would be advantageous" or some words to that effect, "if Singer owned the claims which were in the Harris patent or got the claims that would be granted." He didn't know what claims were in there, but if Singer retained the United [fol. 1119] States claim.

Q. Was there any discussion or any mention of the use of any other patent?

A. At the time all I was trying to do in the whole subject of this conversation was to get Mr. Gegauf to come to Singer. Singer had had to go to Mr. Gegauf, and, of course, when you have to go to a European to buy something, they immediately realize that you must—well, it puts you in a bad bargaining position.

The Court: I wouldn't limit that to Europeans.

The Witness: No but it seems to be a little worse in Europe.

The Court: No. We are a little prejudiced in our own favor. It is the same the world over.

Mr. Pettit: Would you read the question back to him, please.

(Question read.)

A. No.

Q. Was the use of two patents in conjunction with each other, several patents, or use of patents in any way other than your being able to enforce them better, mentioned at that conference?

A. It was only this discussion between Mr. Magnoni and [fol. 1120] myself in relation to the possibility of purchasing the Gegauf patent. There was no mention of any other patents or any combination of patents.

Q. When Mr. Vigorelli used the word "advantageous" or "advantageous to all," what did you think he meant at that time?

A. I thought he meant that it would be better for his client if Singer, who was a corporation in the United States, owned the Gegauf patent and they would rather have Singer own it than have Gegauf because they thought that we could enforce it better or were in a better position to enforce it.

Mr. Pettit: Your Honor, would it be satisfactory to you to have a recess or an adjournment at this time?

The Court: Did you have in mind—is that all right with you, Mr. Elkins?

Mr. Elkins: Yes, your Honor.

The Court: All right, two o'clock.

(Recess until 2:00 o'clock p.m.)

[fol. 1121] Afternoon Session

2 P.M.

JOEL GIBSON STANFORD resumed.

Direct Examination Continued.

By Mr. Pettit:

Q. I show you Government's Exhibit 28. I call your attention to the passage in here which says "When in Italy we laid careful plans for Gegauf to be advised by a third party that Singer could best handle the patent situation if we owned the Gegauf U.S. patent. Think it will bear fruit. This suggestion, with the U.S. attorney situation is pressure in the right direction."

Now will you please state what you were referring to and what you meant by "Singer could best handle the patent situation"?

A. I was referring to the discussion that I had with Magnoni when in Italy.

Mr. Elkins: If your Honor please, if the defendant is using Government's Exhibit 28 to refresh his recollection, I think that the record should show it. I think that opposing counsel should ask him for his testimony and only after exhausting the memory of the witness should he attempt to refresh his recollection.

The Court: He is not attempting to refresh his recol-[fol. 1122] lection as to the contents of this paper. He is calling his attention to a specific sentence in this paper.

Mr. Elkins: Yes.

The Court: And he is asking him what matters he referred to. That is entirely different than attempting to use a paper to refresh a witness' recollection.

Mr. Elkins: And my inquiry is why the document is left in front of the witness and why the witness refers to it——

The Court: For the purpose of facilitating the examination so that as the witness is asked a question, "What did you mean by this sentence", the witness may look at it.

(Mr. Pettit removes the exhibit from the witness stand.)

The Court: You do not have to take it away from him.

Mr. Pettit: That is all right.

The Court: The witness may look at that particular sentence, and if necessary look at the sentence above that preceded it, and the sentence that followed it, and read the sentence from its context, which is something that [fol. 1123] you have been urging the Court to do with reference to this multitude of exhibits.

Mr. Elkins: That the latter part is true, we agree with your Honor.

The Court: Well, you are a very able and experienced lawyer, Mr. Elkins. You have tried a number of cases before me. You know that this is proper—you have done it yourself. Your memory has perhaps skipped in that respect.

All right—I have done that many times in my practice.

Q. To what patent situation were you referring, in referring to your talk with Magnoni?

A. The possible purchase of the Gegauf patent.

Q. Thereafter did you or Mr. Waterman or the company make inquiry as to whether Mr. Magnoni had carried out the enterprise that he had suggested?

A. We did.

Q. And did you receive an answer to that inquiry?

A. We did.

Q. And is this answer, Government's Exhibit 31, a letter dated June 19, 1956, to Mr. Waterman, which I now hand to you (handing witness).

[fol. 1124] (Witness examines)

Q. Is that the reply?

A. That is the reply, yes.

Q. You will notice that there is a quotation from Mr. Magnoni's letter and he says "Subject: Interfering patents Singer/Gegauf/Vigorelli"—and then follows the sentence:

> "With regard to the question of the advantage of the American Singer Company being in possession of the different patents which might be useful in defense of sewing machines with multiple cams"——

will you tell me what you considered that this referred to when you received and read the letter?

A. I thought the different patents were the patents of Singer and Gegauf.

[fol. 1125] Q. Which two patents would they be?

A. The Harris patent and the Gegauf patent.

Q. Why did you conceive that Vigorelli was not among those intended to be covered by that sentence?

A. Vigorelli at this time was out of the interference with Singer or, rather, with Harris; he had already been in interference, so certainly he would not be included in this.

Q. Are you referring to the documents that I showed you this morning, correspondence from his counsel under the February 26th date?

A. I believe that was the date, sir.

Q. Had you had any conversation with Mr. Magnoni that referred to or mentioned any patent other than the Harris patent?

A. In the license agreement that was originally drawn up with Mr. Vigorelli it did have the Johnson and Perla applications mentioned in it, but there was no discussion

with Mr. Magnoni the last time that I was in Italy when we talked of the possibility of getting Gegauf to approach us to sell his patent.

Q. No mention was made of any patent other than the Gegauf patent and your having the Harris patent——

A. And the Harris patent.

[fol. 1126] Q. —in which you thought you would not win the claim, is that right?

A. That's correct.

Q. When he wrote his subsequent letter, which is Government's Exhibit 32, a letter dated September 19, 1956 and addressed to you, which I now hand you, did you consider at that time that there was any confirmation in this letter that showed that Magnoni was speaking about the Harris and Gegauf No. 1 patents?

A. Yes. On the second page of this letter he called attention to the fact that Singer, by making use of the owned Harris and Gegauf patents. He refers there to the Harris and Gegauf patents.

Q. On the first page of that letter Mr. Magnoni states:

> "Mr. Gegauf was today effectively willing to transfer his patent application in the U. S. to Singer without regard or little regard to the financial side of the matter."

Did you confer with Mr. Gegauf a few days or a short time after this?

A. Yes, we met him at Lindau.

Q. On September 23rd?

A. I believe that to be the date.

[fol. 1127] Q. And did you find him willing to transfer his patent without regard or with little regard to the financial side of the matter?

A. No; he wanted a very high price.

Q. Had there ever been any mention to Mr. Vigorelli, Magnoni or anyone else of the possibility of acquiring Vigorelli's patent or patent application in the United States?

A. The one that was interfering with—you mean by that the one that was interfering? No, we never made any comments or any efforts whatsoever to acquire that patent.

Q. And no mention of it was ever made to Mr. Vigorelli or any representative of his?

A. Not to the best of my recollection.

Q. After the time that you received this letter of September 19, 1956 have you, Mr. Waterman, or anyone representing Singer received any communication of any kind from Mr. Vigorelli or from Mr. Magnoni with respect to Singer's acquisition or possible acquisition of the Gegauf application?

A. No, sir.

Q. Was there a conference in New York attended by Mr. Gegauf, Jr.?

[fol. 1128] A. Yes, there was.

Q. And do you know the date or the approximate date of that?

A. That was when the factory was closed, and it was the first part of August 1956.

Q. And who attended that conference?

A. Mr. Waterman, myself and Mr. Gegauf, Jr. and his sister.

Q. Tell us what took place at that conference, what subjects were discussed and what was said.

A. Mr. Gegauf, Jr. and his sister had just returned from the West, where they had attended a conference in Kansas City. The conference had to do with sewing machines and sewing machine importers, I think—I am not sure, but I think that was what it was—and Mr. Gegauf, Jr. said to me that when he was there he saw many Japanese sewing machines, there were a large number of them, and he expressed concern, I might say, over the number that he saw there.

We talked about the large number of machines being imported into the United States, the difficulty with enforcing a United States patent where there were a large number of importers, the size of the United States, the number of circuits that we had and the difficulty of finding [fol. 1129] who was selling the machines and then, after finding out who was the seller, finding out the importer because you couldn't go around suing every retailer of sewing machines, that you would have to find the larger ones, and that these all presented a problem to owning a United States patent and trying to enforce it against importers of sewing machines.

Q. Did you have any purpose or objective in telling Mr. Gegauf——

A. We, of course, were trying to emphasize to him how difficult it was and how expensive it was to try to enforce a United States patent under those conditions, and that we thought that, being here in the United States, we could better enforce it than he could, and we asked him whether or not he thought his father would be interested in selling his United States patent to us.

Q. Does that cover the substance of what took place at that conference?

A. Yes, except that he did ask if he could visit our factory as we had visited his when we were over there, and we had to tell him that the factory was closed and that we couldn't let him in or he couldn't see it in operation.

[fol. 1130] Q. Did you thereafter seek a conference with Mr. Gegauf, Sr.?

A. We did, sir.

Q. Did you make arrangements to go to Europe to see him?

A. Yes, we were going to Germany, and we made arrangements to see him in Germany at Lindau, which is just across Lake Constance from Steckborn.

Q. When you went on that trip did you take any forms of agreement with you that you contemplated using or hoped that you could use?

A. As I recall, we did at that time.

Q. And those forms of agreement were of what nature, if you remember?

A. Well, they were just, as I recall, an assignment and a license back to Mr. Gegauf.

Q. Did you set the conference date with Mr. Gegauf?

A. Yes.

Q. Do you know when it was held?

A. It was mentioned a moment ago. I am not so sure of exactly when the conference did take place.

Q. Would it refresh your memory if I said September 23rd?

A. Yes.

[fol. 1131] Q. You attended the conference?

A. Yes.

Q. And it was held at Lindau, did you say?

A. Lindau.

Q. Did you write to Mr. Lando in Italy with reference to that conference?

A. Yes, I did.

Q. Now tell us what took place at that conference.

A. We met around 12:30 and had lunch, and then after lunch there was a discussion of the possible sale of the patent to Singer, and there was the usual skirmish as to who would make an offer, and then Gegauf, Jr. finally came out with an offer of a million dollars.

We laughed at that and we thought that he was just kidding, and after considerable discussion back and forth they made the second offer of $250,000 but that was way in excess of anything we expected to pay.

Then they tried to get from us—they had made two offers, and said so, and they tried to get from us an offer, and we told them that we were so far apart that we just didn't feel that we should even make an offer. So that was the end of the conference, our failure to make an [fol. 1132] offer, and we left them in a friendly spirit.

Q. Did you feel that the negotiations were thereupon terminated?

A. As far as we were concerned at that time they were definitely terminated.

Q. Did you write this letter of October 9, 1956 to Dr. Lando, Government's Exhibit 37 (handing)?

A. I did.

Q. And does that express your conclusion as of the end of that conference?

A. It does, sir.

Q. Was there any subject matter that you reserved for any subsequent discussion at any subsequent time?

A. To the best of my knowledge there was none.

Q. Did you hear any other party who was with you, Mr. Waterman specifically, reserve any subject matter for possible further discussion?

A. No, sir.

Q. And you considered the negotiations thereupon terminated?

A. I did.

Q. Shortly thereafter, on October 22, 1956, did you have occasion to write to Mr. Waterman and suggest that he [fol. 1133] write to Mr. Gegauf with reference to the interference that was pending?

A. Yes, sir.

Q. Did you write this letter of October 22, 1956 addressed to Mr. Waterman, Government's Exhibit 78, inclosing a proposed draft of a letter to Mr. Gegauf, Government's Exhibit 39 (handling)?

A. That was prepared for my signature. I did not write the letter.

Q. Did you sign the letter?

A. Yes.

Q. You read the letter and knew its contents?

A. Yes, sir.

Q. And you made the recommendation therein contained?

A. Yes, sir.

Q. Did Mr. Waterman write the letter of October 24, 1956, Government's Exhibit 41, to Mr. Gegauf?

A. No. This is a letter that I wrote to Mr. Gegauf.

Q. I am sorry. You wrote the letter of October 24th.

A. I did, sir.

Q. This suggested draft was a draft of a letter that you [fol. 1134] would like?

A. Right.

Q. Is the letter that you wrote the same as the draft that you suggested?

A. If I recall, it is the same.

Q. In your letter to Mr. Waterman you state:

> "We have heard nothing from Gegauf or his U. S. attorneys concerning this interference since our recent trip. You will recall that under our Singer-Gegauf agreement it is incumbent upon both parties to settle this interference in accordance with the patent laws of the United States."

Is that what you believed the situation to be at the time you wrote this letter?

A. Yes, sir.

Q. And you were deliberately advising Mr. Waterman, vice president of the company, to that effect?

A. Yes, sir.

Q. And you were suggesting that you write to Mr. Gegauf——

A. Yes.

Q. —in which you advised Mr. Gegauf that: Our agree-

ment provides that this interference be settled in accord-
[fol. 1135] ance with the patent laws of the United States?

A. Yes, sir.

Q. And you wrote that letter to Mr. Gegauf containing that very sentence?

A. I did.

Q. And that was, I believe, in connection with the settlement of an interference which you knew would be awarded to Mr. Gegauf?

Mr. Elkins: I object, your Honor.

The Court: It is leading.

Objection sustained.

Q. At the time did you know the situation with respect to the interference, at the time you had gone there?

A. Yes, I knew what the priority dates of both parties were.

Q. And what was the situation at that time with respect to those interferences?

A. Mr. Gegauf was ahead of any date that we could establish for Harris.

[fol. 1136] Q. And what was your conclusion from that?

A. That the claim would be awarded to Mr. Gegauf.

Q. And you were prepared to go ahead with that interference and settle it in accordance with the laws, the Patent Laws of the United States?

A. Yes.

Q. Now your conference with Mr. Gegauf came to an end in 1956, the month of October, I believe?

A. Yes.

Q. Did you have any further communication with Mr. Gegauf with reference to any possible purchase of his patent between that time and September 9, 1957, almost a year later?

A. It was about a year later, I believe, before the subject was brought up again.

Q. No discussions, no talks of any kind with reference to it in that intervening 11 months with Mr. Gegauf?

A. To the best of my knowledge, sir, that is true.

Q. And none with Vigorelli or Magnoni with reference to the possible acquisition of this Gegauf application?

[fol. 1137] A. No, sir.

Q. On September 9, 1957, did you suggest to Mr. Waterman that a letter be written to Mr. Gegauf?

A. I believe I did. I know that I suggested that another letter be written to Mr. Gegauf in an effort to acquire his patent.

Q. I show you Government Exhibit 43, a letter signed by you and addressed to Mr. Waterman, dated September 9, 1957, and a proposed letter annexed thereto, and ask you if you wrote that letter to Mr. Waterman (handing witness)?

A. I did, sir.

Q. And you suggested the writing of the letter annexed to it?

A. Yes, I did.

Q. At the time that you wrote this letter, it states "It is our feeling that we have nothing to lose and much to gain by again seeking to obtain the rights in the Gegauf United States patent application".

Did you have a feeling or express any feeling that you were just resuming negotiations that had been held in abeyance?

A. Well, I don't think our approach was that we were just going to start in just where we left off.

[fol. 1138] Q. You did want to approach Mr. Gegauf for the possible purchase?

A. Yes.

Q. In your proposed letter you did not suggest anything about a possible purchase, is that correct?

A. That is correct.

Q. Why is that?

A. Well, we didn't want Mr. Gegauf to feel that we were just coming back again for the same thing, trying to buy his patent.

Q. Did you use this letter as an approach to get to Mr. Gegauf?

A. Yes, we wanted to talk with him again.

Q. And when you were there, to bring up the subject of purchase?

A. Yes, that is correct.

Q. Did Mr. Waterman then write a letter, which is Government's Exhibit 44, dated September 12, 1957, to Mr. Gegauf (handing witness)?

A. He did.

Q. Do you find a change in that letter over or as compared to the form of letter that you had suggested be written?

A. Yes, there is a little change.

[fol. 1139] Q. What is that change?

A. Well, where I had referred to the large import of Japanese machines into this country, Mr. Waterman took a much broader view in that he was interested——

Mr. Elkins: I object as to what views Mr. Waterman took. The question is——

The Court: You may tell us what he said to you or spoke to you about that manifested this view which led him to feel that this view was distorted——

The Witness: I am sorry, sir?

The Court: You were going to tell us what Mr. Waterman said which indicated his view and what he did which indicated his view. Don't characterize it.

The Witness: He changed the letter to include infringing manufacturers who are primarily manufacturers in other countries.

Q. I would like you to clarify that distinction.

What had you written with reference to the enforcement of patents in this proposed letter that you handed to Mr. Waterman?

A. I said to Mr. Gegauf in my letter that "You are no doubt aware that recently the many Japanese sewing ma-[fol. 1140] chine manufacturers have brought out a large variety of ornamental stitch machines which would appear to come within the terms of claims which may be awarded in the United States with respect of the above Gegauf and Singer patents".

The Court: He specifically took out your reference to Japanese machines, did he?

The Witness: That is correct, and he put in——

The Court: Did he make any other substantial change?

Q. I wish you would—excuse me, answer that question.

The Witness: No other substantial change, your Honor.

The Court: Did you speak to him concerning this deletion of this specific reference to Japanese sewing machine manufacturers?

The Witness: No, your Honor, this letter was sent out like that.

Q. Now, Mr. Stanford, you wrote "We have reason to believe that all of the very many United States sewing machine importers will wish to deal in such Japanese ornamental stitch machines, and that patent suits against each [fol. 1141] of these importers may be necessary if our respective patents are to be enforced".

What idea were you trying to convey in that sentence?

A. Well, I was trying to convey that it was a difficult job to enforce the patents in the United States—if you had to bring suits against all the importers that had different types of machines, to establish your rights.

Q. Well, were you trying to convey the idea that if they were going to enforce the patents you would have to sue Japanese importers?

A. Yes.

Q. Would it have been possible to enforce patents in the United States and not sue the Japanese importers?

A. No, we would not—we would have to include Japanese importers also.

Q. Did you have any intention of implying—that to enforce the patents you would not have to sue other people as well?

A. We were interested in protecting the manufacture and sale in the United States of the 401 machine and wherever the machine came from, it was a loss of sale or potential loss of sale to Singer.

[fol. 1142] Q. But taking your own sentence, is it not correct that if you are going to enforce the patents you would have to do a broader job than just sue the Japanese?

A. Yes, you would have to sue more than the Japanese if you wished to enforce it.

Q. Is that the point in your opinion that Mr. Waterman was covering by making this change, that if you are going to enforce it you would have to sue infringers?

The Court: Objection sustained—on the Court's objection.

Q. Did you receive a reply from Mr. Gegauf or Mr. Waterman did, to that letter?

A. Yes, sir, to the best of my recollection he did.

Q. Is that Government's Exhibit 45, a letter dated September 17th (handing witness)?

A. Yes, that is correct.

Q. Had anyone mentioned to Mr. Gegauf, since the meeting of the year before, about a transfer of the patent to Singer?

A. Not to my knowledge.

[fol. 1143] Q. Or Singer to Gegauf?

A. Of the Harris patent to Gegauf?

Q. Did Singer mention to Gegauf any possibility of the transfer of the Gegauf patent to Singer?

A. Since the meeting?

Q. Yes.

A. To the best of my knowledge, no.

Q. Then when you wrote this letter to Mr. Gegauf, which referred to "mutual enforcement of the U.S. application", did you believe that he was intimating that he was volunteering the information to you that he might be willing to convey his patent to you?

A. No. I thought that "mutual enforcement"—I don't know how you can mutually enforce anything but I imagine being German, he was using a term that meant we would have to enforce ours and he would have to enforce his.

Q. Your previous letter to him was written on its face for the purpose of discussing problems of enforcement of the patents, was it not?

A. Yes.

Q. Did you prepare forms of agreement which you thought should be taken with you when you went to see Gegauf in September, 1957?

[fol. 1144] A. Yes, I did.

Q. I show you these assignment forms and ask you if they were the documents which you prepared. These are Defendant's Exhibit 36, Defendant's Exhibit 37 and Defendant's Exhibit 38 (handing witness).

(The witness examines.)

Q. Are those the documents you prepared to take with you?

A. They are, sir.

Q. And those are the forms of assignments with license back?

A. One is, and one is an ordinary assignment form.

Q. With reference to that assignment, one of those assignments, you stated "Agreement (1) is suggested for use in the event that Gegauf should be willing to sell us the application for a single lump-sum payment. This agreement has the advantage of providing Singer with an irrevocable title to the subject application and, furthermore, under this agreement it would not be incumbent upon Singer to deal any further with Gegauf in connection with this general subject."

What did you intend Mr. Waterman to believe as a result of that advice?

A. That the assignment of the entire right to us in a [fol. 1145] lump-sum was much better from the Singer point of view.

Q. And did you understand that you would believe, once that would be done, that there would be no necessity of any further dealings of any kind with Mr. Gegauf?

A. Yes.

Q. And that would be under the form of the proposed agreement that you had drawn?

A. Yes.

The Court: No, the letter doesn't say "any kind". It just says "this general subject", which I take it was the subject of enforcement, was it—enforcement against infringement?

The Witness: That—I am not sure, your Honor. I would have to see that.

Q. Yes. Look at this Exhibit 47, the last line on the first page (handing witness).

You say "general subject". What did you mean by "general subject"?

A. Anything at all having to do with the patent.

The Court: The enforcement of the patent?

The Witness: The enforcement of the patent.

The Court: And that is all?

[fol. 1146] The Witness: Oh, the license back or anything other than—I mean license or anything else that related to it.

The Court: But you already had a license, didn't you?

The Witness: Yes, we had—but I meant licensing others.

Mr. Elkins: That is Government's Exhibit 47, your Honor.

The Court: Yes, 47. That is dated September 23, 1957.

Q. You held a conference with Mr. Gegauf with reference to this matter?

A. We did, sir.

Q. And what date was that conference?

A. I do not recall the date but it was some time in the fall of 1957. It was at Zurich.

Q. And can you tell us what took place there and who was at the conference?

A. There was Mr. Gegauf Sr., Mr. Gegauf Jr., and two members of his organization.

As I recall, Mr. Gegauf's daughter was also there, and Mr. Waterman and myself were the only representatives of Singer.

[fol. 1147] Q. And what took place?

A. Well, we started on general subjects and we got around to bargaining for the patent, and we started out offering him $25,000—we made a first offer of 25,000, and they bargained us up to 40,000. We thought we had it at this figure, and we ended up the conference discussions with the thought that Mr. Gegauf would be willing to selling us the United States patent application for $40,000.

Q. At that conference do you remember anything else being discussed?

A. I have difficulty remembering very much about the conference other than it was held and we thought that we were—I remember we were bargained up from 25,000 to 40,000.

Q. I show you a letter of October 17, 1957, from Mr. Lightner to Mr. Waterman, Government's Exhibit 49, and I ask you to look at that and see if that refreshes your memory in any respect (handing witness)?

A. It refreshes my memory only to the extent that this matter was treated as if it were not overly important to Singer.

Again there were natural language barriers and we had [fol. 1148] some difficulty understanding each other because the only translators present were Mr. Gegauf's daughter who speaks some English, and one of the mem-

bers of his organization. We did not have someone who understand patent language with us.

Q. Other than that, do you recall anything else that was said or done at that conference?

A. I do not.

Q. Did you discuss the form of the agreement?

A. We had those two forms of agreement that we took over with us that you showed me a moment ago, and we showed them to Mr. Gegauf, and he—we showed them first to him, and he wanted the matter taken up with his patent attorney, Mr. Willi, and so we then took these forms down, the assignment forms or the license back, to Mr. Kirker, who was in Geneva, and we gave them to Mr. Kirker and asked him to take them up with Mr. Willi, to see if they were proper, and if Mr. Willi would agree, and if they were, if he felt they were proper, to return them to us in the United States and we would send them back properly signed with $40,000.

Q. Did you give Mr. Kirker any authority or any direction to negotiate any contract other than the one in [fol. 1149] the form that you had delivered to him?

A. We had delivered this to him, and the only thing left out was the $40,000, and he was supposed to fill that in and submit to Mr. Willi, Mr. Gegauf's attorney.

Q. And did he have any authority to vary any of the terms and conditions of the contract as you handed it to him?

A. No.

Q. In which the $40,000 was inserted?

A. He did not.

Q. He was not authorized to negotiate any terms or any changed terms in that?

A. At that time we felt the whole thing was already negotiated and it was only necessary to get Mr. Willi's approval.

Q. And so far as your memory serves you, is that all that took place and all that was said at that conference?

A. Yes, that is all I can remember.

Q. Now some time after that you received a cable from Mr. Waterman relating to the situation with Gegauf.

I show you Government's Exhibit 50 and ask you if that [fol. 1150] is a cable you received (handing witness)?

A. It is.

Q. That cable you replied to by Government's Exhibit 51, did you (handing witness)?

A. Yes, it is.

Q. You replied in your cable, stating "Value of Gegauf patent to Singer greatly decreases when other people are licensed":

Why? What purpose did you so advise Mr. Waterman, and what did you intend to mean thereby?

A. Well, we were saying that if there were to be European companies, as stated in the cablegram, licensed under this patent, it was very greatly decreased—the value of it would be decreased so far as we were concerned.

Q. In other words, the cable raised the point that Gegauf wanted exceptions under which he could——

A. He wanted to license Pfaff, Vigorelli and Necchi.

Q. You deemed that a license to any person, European or any other, depreciated the value of what you got?

A. Yes. The more licensees you have, the less you get under the patent when you purchase it.

[fol. 1151] Q. You said "Divisional claim must be included".

What was that in response to?

A. That was in response to the fact that he said that he was not going to include the divisional application, and this is the application that we had bargained for in the fall of that year, that we thought we had bought for $40,000.

Q. Was this the first indication from Gegauf that he wanted to reserve out this divisional application?

A. This is the first indication that we had that he was going to file a divisional application.

Q. Why did you state "Divisional claim must be included"?

A. We wanted the claim because we had entered into an agreement with Messerschmitt, on Messerschmitt's machine we gave them a license in the United States under our Gegauf and Way patent, and we wanted to protect ourselves because this was a very valuable license to us. We had sold many machines in Europe and we did not want anything like bad faith or any failure of consideration to occur.

Q. Are you referring to Government's Exhibit 86, the

cross-license agreement with Messerschmitt, which I hand to you (handing witness)?

[fol. 1152] A. Yes, this is the agreement that was filed and was signed in '57.

Q. Under that agreement you had given a license to Messerschmitt to sell in the United States, which was based on the Perla application?

A. That is correct.

Q. What was the situation with respect to Gegauf divisional application once it was made—and I understand it was not yet made at the time, but once it was made, what was the relative priority position between the Perla application covering the Messerschmitt machine and the Gegauf patent?

A. Gegauf having the prior date and being entitled to go back to that date, even though these claims had been in the Office for quite a long time, he was still entitled to go back and he would dominate the Perla patent, and also the Messerschmitt machine, so that Messerschmitt would not be able to make it in this country without a license from Mr. Gegauf on the second patent, on the divisional application.

Q. Did you ever tell Gegauf during any of these negotiations after he raised this point of retaining the divisional application why you wanted it?

A. No. If I had I am afraid it would have gone up [fol. 1152a] considerably in value so far as he was concerned.

Mr. Pettit: If it would suit your convenience, your Honor, I would just as soon have five minutes recess now.

The Court: All right.

(Recess.)

[fol. 1153] Q. Mr. Stanford, I believe you subsequently received a letter from Mr. Kirker amplifying his cable, explaining it in more detail, which is Government's Exhibit 52, a letter addressed to you, is that correct (handing)?

A. Yes.

Q. Did you then reply to that letter by Government's Exhibit 53, a letter of October 30, 1957 addressed to Mr. Kirker, which I now show you?

A. I did.

Q. In your reply of October 30, 1957 did you consider that you were giving an answer to every question raised by Mr. Gegauf and every question pointed out by Mr. Kirker?

A. Yes, I think we were, sir.

Q. And did you consider that you were giving instructions to Mr. Kirker with respect to each of the points raised?

A. Yes.

Q. Did you consider that you were leaving any leeway or expression or power of authority to Mr. Kirker with respect to anything other than the possibility of holding down the amount of money that you had fixed as a maximum?

[fol. 1154] A. No. We told him what we were willing to do and gave him permission to go to $75,000, but we wanted to get it for $62,500.

Q. Did you consider that by this letter you were telling Mr. Kirker——

The Court: I think these questions are all really objectionable. What he considered is immaterial. What did the letter authorize him to do?

Mr. Pettit: Your Honor, with respect to this letter I guess that is correct.

The Court: While an agent may testify as to his authority, a principal may not interpret a written document unless it is ambiguous.

Mr. Pettit: I submit, your Honor, the only thing is that the letter is so clear that the testimony is not needed anyway.

The Court: I hope the questions that you propounded are not an indication of any question in your own mind.

Mr. Pettit: Not in the slightest, your Honor.

The Court: They might have been to one of a suspicious bent.

Q. Did you then receive a reply to this last letter that you just mentioned, a reply from Mr. Kirker, Government's [fol. 1155] Exhibit 56 dated November 18, 1957, which I now show you?

A. Yes.

Q. And upon receipt of that letter was it concluded that you should go to Europe?

A. Yes. As I recall, as a result of this letter it was decided that I should go to Europe.

Q. Before you went to Europe did Mr. Lightner, the then president of the company, write a memorandum for your guidance?

A. He did.

Q. And establishing the policy of the company?

A. He did.

Q. Is this the document set forth herein, Government's Exhibit 57?

A. Yes, sir.

Q. I call your attention to page 4, the paragraph beginning at the bottom of the page. It says:

> "In determining whether to broach this idea in the course of negotiations, it must be remembered that getting control of the patent is the main objective, with the elimination or curtailment of European imports as an important but secondary objective . . ."

[fol. 1156] First I would like to know did you consider that as a directive to you as to your negotiations when you were over there?

A. Yes, sir.

Q. Did you consider that there was any change in the policy that you had been trying to carry out all along?

A. No.

The Court: Come back for a moment to Government's Exhibit 56. This was written before your visit to see Gegauf?

The Witness: Yes, sir.

The Court: And after receipt of this letter you did go over and see Gegauf?

The Witness: Did I?

The Court: Yes.

The Witness: Yes, sir, I did.

The Court: Did he, during your talks with him, mention the specific one European Company to which Gegauf would like to reserve the right to grant a sub-license?

The Witness: Did Mr. Gegauf?

The Court: Yes.

The Witness: Yes, he did.

[fol. 1157] The Court: What was the name that he mentioned?

The Witness: Pfaff.

The Court: That's all I wanted to clear up in my mind.

Mr. Pettit: May I ask with respect to what paragraph was that question directed.

The Court: Government's Exhibit 56, second page, third paragraph. It says intervenor wanted to reserve to itself the right to grant a sub-license to one European Company, one European manufacturer.

The Witness: Yes.

The Court: And he mentioned that that one was Pfaff.

The Witness: Yes, during my discussion with him.

The Court: All right.

Q. On this trip to Europe which you took, did you meet with Mr. Gegauf?

A. Did I?

Q. Yes.

A. Yes, I did.

Q. And did you enter into agreements with him?

A. I did.

[fol. 1158] Q. I show you Government's Exhibits 58 and 59 and ask you if those are the two agreements that you entered into.

A. Yes. One is the assignment from Gegauf to Singer and the other is the agreement with Gegauf, the license-back from Singer to Gegauf.

Q. Did you, to your knowledge, or did anybody on behalf of Singer, enter into any agreement with Mr. Gegauf with respect to this application or any patent or patents that might be issued other than the agreement expressed in the assignment itself?

A. In the assignment and the license agreement, no.

Q. Did you make any commitment or have any understanding or make any promise or did you or anyone else on behalf of the company, so far as you know, make any such promise or commitment or have any understanding that you would use any patent that issued upon the application assigned against any particular person or any particular group of people?

A. No, there was no such——

Q. Or that you would use it in any particular manner.

A. No.

[fol. 1159] Q. Or that you would not use it.

A. There was no agreement concerning what use the patent would be put to.

Q. I ask the same question with respect to licensing or not licensing any patent that you might want.

A. There was no curtailment of any rights on that.

Q. Your answer is you had no such agreement or understanding?

A. No such agreement.

Q. You made no such agreement?

A. No such agreement.

Q. Did you mention to Mr. Gegauf, to Mr. Waterman or to anyone else the existence of the remedy or the possibility of bringing an action before the Tariff Commission in the United States?

A. No.

Q. Had you, as a matter of fact, at any time prior to the execution of these assignments had any knowledge or given any recognition to the fact that any such proceeding could be brought in conjunction or in connection with these assignments?

A. No.

Q. And I ask the same question with respect to Vigo-

[fol. 1160] relli or Vigorelli's representative.

A. No.

Q. Would your answer be the same with respect to all questions?

A. It would.

Q. Did you make any agreement, have any commitment or any understanding that you would use the patent in conjunction with any other patent?

A. None whatsoever.

Q. Not even in conjunction with the Harris patent?

A. We had no agreement as to how we would use the patent.

Q. When you executed this agreement, you understood, assumed and believed that Singer became the complete owner of the patent, free to use it as it might see fit or not use it, limited by no means other than as expressed in the agreements themselves?

A. That's right, sir.

Q. Have you ever heard anyone on behalf of the company suggest anything to the contrary?

A. No, I have not.

Q. Do you know, Mr. Stanford, when consider was first given by the company to bringing the Tariff Commission proceeding?

[fol. 1161] A. Sometime, I believe, in the latter part of May, after we acquired the patent in December. We acquired the patent in December, and I think it was about five months after the acquisition of the patent that we gave any consideration to that.

Q. In May 1958?

A. That would be correct, sir.

Q. And would you state with whom the question was taken up as to whether such a proceeding could be brought under the existing situation?

A. That was taken up with Mr. Brumbaugh, and he recommended——

Q. He recommended what?

A. That we see Mr. Colburn.

Q. And Mr. Colburn is an expert on tariff?

A. Expert on tariff matters.

Q. And following the Tariff Commission proceeding did you contemplate getting or intend to get an order if the Commission would grant it, or recommend to the President that it be granted, that would exclude from the United States all imports of all machines that would infringe Gegauf No. 1?

A. That was my understanding of the effect of the action.

[fol. 1162] Q. And that was what you and Singer hoped to obtain as a result of this proceeding?

Mr. Elkins: Objection. I don't know who the question is directed to, to Mr. Stanford or to Mr. Singer, or whether it relates to Mr. Stanford or to Mr. Singer. I think the opposing counsel used both in his question.

Mr. Pettit: I think Mr. Stanford is fully acquainted with this whole proceeding.

The Court: You referred to Mr. Stanford?

Mr. Pettit: Yes.

The Court: That is considered embodied in the question.

Mr. Elkins: The question is directed to the thinking of Mr. Stanford.

The Court: That's right.

Mr. Elkins: And the decisions of Mr. Stanford.

The Court: That's right.

Mr. Pettit: And to the best of his knowledge and information——

The Court: No. First as to him. I don't know that he can testify to the thinking of anybody else. He must be quite a fellow if he can, unless it has been manifested by some action.

[fol. 1163] Q. Your own, Mr. Stanford. Was it your contemplation that you contemplated or expected to get an order that would exclude all infringing machines?

A. That was our hope.

Q. Had you heard any expressions of any of the officers of the company indicating anything to the contrary?

A. I had not.

Q. And you have discussed the matter with Mr. Kircher?

A. The matter was discussed with Mr. Kircher before the action was brought.

Mr. Elkins: Excuse me, your Honor.

For the benefit of the record, there are two names here, Kirker and Kircher, and the last name mentioned was Kircher?

Mr. Pettit: Kircher, the president of the company.

Mr. Elkins: I see. Thank you.

Q. You participated in the conferences and in the drafting and execution of the agreement with Sears, licensing Sears under Gegauf No. 1, I believe.

A. Yes, I did, sir.

Q. And you examined the sewing machine that Sears [fol. 1164] wished to import into the United States?

A. I did.

Q. And did you make a determination as to whether that machine infringed Gegauf No. 1?

A. It was my opinion that it did.

Q. And you examined it and made that determination?

A. I did, sir.

Q. Did you determine whether, in your opinion, it would infringe the patent that would issue under Gegauf No. 2 application?

A. In my opinion it infringed Patent No. 1 of Gegauf, the single follower.

Q. And was it your opinion that it did not infringe or did infringe the patent that would issue under Gegauf No. 2?

A. My opinion was that it did not infringe that. It infringed the first patent.

Q. And did you so express yourself?

A. I did.

Q. And for what reason was the Gegauf No. 2 included in the license agreement executed with Sears?

A. At the insistence of Sears.

Q. If the Sears license had not been with respect to a machine which infringed Gegauf No. 1, would there have [fol. 1165] been any occasion whatever, in your opinion, to have referred to the Sears license to the Tariff Commission?

A. No. If it had only been an infringement of Gegauf No. 2, there would have been no necessity in bringing that up before the Tariff Commission.

Q. And you considered that it infringed Gegauf No. 1 and there would be a license under Gegauf No. 1 and reported it to the Tariff Commission as such, notwithstanding the fact that you believed that it might imperil the Tariff Commission proceeding, is that correct?

A. We did, sir.

The Court: That's taking him right down by the nose.

Mr. Pettit: I am almost through with these, your Honor. I believe I am going to be through with this this afternoon, if I hurry.

The Court: All right. If you continue that way, you shouldn't take too long.

Do you want a few minutes to check something?

Mr. Pettit: Yes, I do.

The Court: I would like you to find out from this witness whether he knows whether that letter, Exhibit 57, was an- [fol. 1166] swered, Gegauf's letter, after the Sears license was issued.

Mr. Pettit: Whether he knows whether it was answered?

The Court: Yes.

Mr. Pettit: I can ask him that one right now, if I may.

The Court: No. Gather all your papers together and let me know when you are ready. Just see that you get all your loose ends gathered. Let me know when you are ready.

(A short recess.)

[fol. 1167] Q. I show you Defendant's Exhibit 57, a letter from Mr. Gegauf to Mr. Waterman, and ask you if you know whether an answer was made to that letter (handing).

A. No, sir, I do not know whether an answer was ever given to this letter.

Q. Is your answer that you know of no such letter?

A. I know of no such letter.

Q. Have you heard anyone suggest that an answer was made?

A. I have not.

Q. Will you please state the policy that has been carried on in your patent office by Singer with respect to the purchase of patents.

A. The acquisition of patents by Singer, we never acquire patents unless we either contemplate making the device or unless it covers a machine which we have.

In the thirty years that I have been there I think that we have acquired only one patent relating to a domestic type of sewing machine—and other than until we started or acquired the Harris patent, up to that time or prior to that I don't recall one instance of acquiring a patent that related to a domestic type sewing machine.

Q. Will you state the policy of your office, Singer's policy with respect to bringing infringement action on patents [fol. 1168] owned by Singer.

A. I do not recall any infringement actions being brought on a patent which we did not use except in conjunction with other patents which were being sued on.

Q. In other words, if you are producing or selling an article under a patent which is being infringed, then you join in the infringement suit of any other patent that happens to be violated?

A. We do.

Q. Other than that, you never sue on a patent owned by Singer unless the company is producing or selling the product under it?

A. We never have.

Mr. Pettit: Your Honor, I think that is all for this witness.

The Court: I just want to ask one question.

Do you know whether this West German firm of Gritzner-Kayser is in any way a subsidiary or associated with Pfaff?

The Witness: It is my understanding, your Honor, that Pfaff acquired Gritzner-Kayser.

The Court: When?

The Witness: That I couldn't give you definitely.

[fol. 1169] The Court: Did you know that at the time you entered into this agreement?

The Witness: I would have to check into it, your Honor. I cannot recall.

The Court: All right. Any further questions?

Mr. Pettit: No, your Honor.

Cross-examination.

By Mr. Elkins:

Q. Mr. Stanford, I would like to direct your attention to Government's Exhibit No. 62, a memorandum written by you dated December 13, 1957, which related to your conference at about that time or a few weeks before with Mr. Gegauf.

Before I do, at that conference, as I understand your testimony, Mr. Gegauf spoke about wanting Vigorelli and Pfaff to be able to sell their machines in the United States without their being sued by Singer under the patents that he, Gegauf, was about to assign to you; is that right?

A. That's correct.

Q. So that in accordance with that desire of Mr. Gegauf, Pfaff and Vigorelli would, for all practical purposes, have a license under the Gegauf patents; is that true?

A. I did not quite get the question, sir. I am [fol. 1170] sorry.

Q. As a result of the provisions that Mr. Gegauf wanted in the agreement, the assignment agreement relative to Pfaff and Vigorelli, both Pfaff and Vigorelli would, for all practical purposes, would they not, have a license or what amounted to a license from Singer to import his machines?

A. No.

Mr. Pettit: Your Honor, I object unless he makes clear whether he is talking about the agreement itself or Mr. Stanford's understanding.

The Court: He is talking about the agreement, as I understand it.

Is that what you had in mind?

Mr. Elkins: Yes, your Honor.

A. Under the agreement Vigorelli has a right to manufacture machines in Italy and sell them in the United States.

Q. Yes.

A. Any other rights is entirely up to Mr. Gegauf as to what he—he gives his consent, and that is entirely in his hands and not in Singer's hands.

Q. At the time of the original agreement, Pfaff was in the same situation, was it not?

[fol. 1171] A. The original agreement—is that the agreement of 1957, in December 1957?

Q. That's right, sir.

A. His position was that we had given Mr. Gegauf the right to say whether or not any action could be brought against the Pfaff company——

Q. Yes.

A. —for any machines manufactured, as I recall, in Kaiserlautern—that is the location of the Pfaff factory.

Q. And as to Vigorelli and his machine or his factory in Italy and as to Pfaff and his factory in Germany, under that agreement Singer was not able to exclude the imports of either of those two companies; isn't that true?

A. That would be true, provided that Mr. Gegauf gave his—in effect, licensed Pfaff.

Q. Or withheld his consent, I suppose.

A. Yes, or withheld his consent.

Q. Now in this memorandum you say that as a result of the matter we were just discussing:

"In this way we avoided giving a license to a third party under the United States patents which we expect to obtain."

[fol. 1172] (Document handed to the witness.)

Q. You have read it, sir?

A. Yes.

Q. Are you referring there to some kind of advantage that inured to Singer by virtue of the fact that it "in this way avoided giving a license to a third party"?

A. Well, the fewer parties that you have licensed under a patent the more valuable the patent is, and so we avoided giving it to a third party.

Q. Who do you mean by a third party?

A. Originally he asked Necchi also be included, and this agreement that we signed with him did not include Necchi.

Q. Pfaff was one party, Vigorelli was a second party.

A. Yes.

Q. And by third party you meant still another, say, for example, Necchi?

The Court: No. He says that Gegauf, in his negotiations, had wanted to reserve to himself the right to license Vigorelli, Necchi and Pfaff, and the exhibits so show. He finally wound up with a deal where he gave his license to Vigorelli, and reserved to himself the right, at his option, [fol. 1173] in effect, to give a license to Pfaff. Necchi was dropped entirely.

That is what the exhibits show.

Q. Can you tell us, Mr. Stanford, when you first examined any Gegauf patent application?

A. The first one that I recall, sir, was the one that we received from Italy, or, I believe that was the first one that we received, shortly after we learned of its existence, when we were about to enter into negotiations with Vigorelli.

Q. Could you give us an approximation as to when that was?

A. That was in the fall of 1955, close to the end of the year, I believe. I have forgotten the exact time that we saw it.

Q. And that was, as you say, the Italian application of Gegauf?

A. That was the Italian patent of Gegauf.

Q. The Italian patent. Thank you.

When did you first see the United States Gegauf application.

A. When did we first—well, we asked to see it—I would have to have my recollection refreshed on that. I know we did ask Mr. Gegauf if we could examine it prior to start- [fol. 1174] ing negotiations with him for its purchase.

Mr. Elkins: I am sorry. I did not hear that last part of the answer.

(Record read.)

Q. Well, I think you started those negotiations, did you not, in September 1956, or the summer of 1956. Wasn't it April 1956, as you recall, that you entered into the cross-licensing arrangement with Mr. Gegauf?

A. I beg your pardon. With Mr. Gegauf the cross-licensing arrangement was in——

Q. April of 1956?

A. —April of 1956, yes.

Q. And then I believe generally the negotiations started in the summer or early fall of 1956 with Mr. Gegauf relative to the purchase of the patent, as you say.

A. As I recall it, yes.

Q. All right. Having those things in mind, then, can you tell us when you first saw the United States Gegauf application?

A. I think the first time we saw it was as a result of an interference proceeding. I did not handle the interference proceeding. I did not handle the Harris patent. I mean by that I was not the one who was actively engaged in the [fol. 1174a] prosecution of that before the Patent Office, but as I recall, sometime—I do not know—after the interference was set up, why, we did have access to the application that was on file at that particular time.

Q. Just to refresh your recollection, Mr. Stanford, may I quote from paragraph 69 of the Facts which have been agreed upon between the parties:

> [fol. 1175] "In September, 1956, arrangements were made with Gegauf for Stanford to examine the Gegauf application and for a conference to be held on September 23, 1956, in Landau, Germany. Stanford examined the Gegauf application", and so forth.

Does that refresh your recollection?

A. Well, I did not examine the application although it says "Stanford examined it". It meant Mr. Williams. I personally did not examine the patent application. He examined it and reported to me.

Q. So I gather from your testimony—am I right in concluding that some time in September, 1956, Mr. Williams of Singer and of your Patent Department examined that application?

A. In accordance with the paragraph that you read, yes.

Q. Well, how about your memory on it, sir?

A. Well, my memory is not clear as to the exact time that Mr. Williams examined it.

Q. Did you confer or did Mr. Williams confer with you as to the contents of the application?

A. Yes, he told me what was in it.

Q. All right. What did he tell you was in it?

A. He told me—the only thing I can remember is he [fol. 1176] told me that it was in order——

Q. I am sorry, I did not hear it.

A. It was in order and there were no defects in it which would prevent Singer from acquiring the patent application.

Q. Did he tell you anything about the substance of it, other than to say that the substance was in order?

A. Well, I presume that he must have said something about the claims of the patent. I really can't recall just what he did say.

Q. Is it clear, Mr. Stanford, that at the time you entered into the agreement with Gegauf on April 14, 1956, that you had not seen the Gegauf application which was the subject of that agreement of April 14, 1956?

A. The United States patent application?

Q. Yes, the United States patent application.

A. We had not seen the United States patent application of Mr. Gegauf at the time we entered into the agreement with him.

Q. And had you at that time seen any application of Mr. Gegauf that was the subject of that agreement of April 14, 1956?

[fol. 1177] A. Well, we had seen the Italian patent and also the Swiss patent and also the Gebrauschmuster.

Q. At that time, Mr. Stanford, was there a patent in Switzerland in Mr. Gegauf's possession, or was it merely an application?

A. No, it had issued as a patent at the time we entered into the agreement. There was a patent that I discussed with Mr. Kirker before entering into the agreement with Mr. Gegauf.

Q. And what was there in Germany owned by Gegauf? Was that a patent or an application? I think you used German to describe it.

A. German Gebrauschmuster is a petit patent, and there was, according to Mr. Gegauf, a patent application pending.

Q. The Gegauf 2 patent covers the Singer 319 machine, does it not?

A. Yes, sir, it does.

Q. And when did you receive information that Gegauf had a patent application which would read on the 319 machine?

A. We received that information that an application similar to the one filed in Italy had also been filed in the United States. That was mentioned to us by Mr. Willi, [fol. 1178] the attorney for Mr. Gegauf, shortly after or at the execution of the agreement in 1956.

Q. Am I right in assuming that the Gegauf Italian patent contained subject matter which would read on the Singer 319 machine?

A. Well, it had subject matter which, if properly set forth, would read on the 319 machine, yes.

Q. His invention was there described?

A. Was there described.

Q. What was that invention as described, Mr. Stanford?

A. It was the idea of a plurality of cams with individual followers for each one, any one of which could be moved singularly and to engagement with one of the cams of the stack.

Q. And with a plurality of cams, each one with its own follower?

A. Each one with its own follower, but the followers were operable only one at a time. In other words, you couldn't put two followers down simultaneously.

Q. Is that the subject matter that later developed into Gegauf 2, so-called?

A. It was.

[fol. 1179] Q. So that am I right in assuming that in 1956 Singer had assumed that Gegauf in his United States application, the subject matter of what later became Gegauf 2?

A. Yes, that can be assumed.

Q. I beg your pardon?

(Answer read.)

Q. And is this Gegauf 2 to which we have just referred, or the subject matter of it, synonymous with the divisional claim as contained in the exhibits which were recently discussed by you?

A. Yes, that is correct.

Mr. Elkins: Your Honor, would it be convenient to recess?

The Court: All right. I just want to ask one question, something I would like to clear up in my own mind.

Under the Singer-Sears Roebuck agreement, as evidenced by Government's Exhibit 110, Singer collected by way of royalty in the neighborhood of about $180,000, is that right?

The Witness: Yes.

The Court: Did Singer remit or pay over directly or indirectly any part of the collection of royalties from Sears [fol. 1179a] Roebuck to Gegauf or their designee?

The Witness: No, sir.

The Court: All right, gentlemen, 2:15 Monday.

(Adjourned to May 22, 1961, at 2:15 P.M.)

[fol. 1180] IN UNITED STATES DISTRICT COURT

UNITED STATES OF AMERICA

vs.

THE SINGER MANUFACTURING CO.

New York, May 22, 1961, 2.15 o'clock p.m.

Trial resumed

Mr. Pettit: Your Honor, if I could, I would like to have the record note at this time that the defendant has handed to the reporter a list of certain errors which appear in the transcript of Mr. Stanford's testimony, either in questions or answers. A copy of this has been given to the government.

The Court: You had a chance to check them over?

Mr. Elkins: No, your Honor. But we have no objection.

The Court: Let me know by tomorrow——

Mr. Elkins: Yes. We have no objection.

The Court: —if these editorial changes are correct. If you have any objection to them, any specific one of them, we will rule on them.

Mr. Elkins: There is no objection to them, your Honor, subject to their check.

[fol. 1181] The Court: All right. Then we will consider that these changes will be physically made in the transcript, unless you apply to the court for a further correction of the original transcript.

The Reporter: How shall that be handled?

The Court: Just draw an ink line through the word. There is only a word here and there—draw a line through it. The best way would be to take the original transcript, change the word, let the witness put his initials alongside the physical change and there will be no question about it.

All right, is that agreeable?

Mr. Pettit: That is.

The Court: Very well.

Mr. Elkins: We would like at this time, your Honor, to offer in evidence a document of the defendant——

The Court: Wait a minute, Mr. Elkins. We have a witness on the stand.

Mr. Elkins: Yes.

The Court: I have a peculiar rule, and I would like to have that witness's testimony completed. If you want to introduce any documents after that, if it does not concern his testimony, you may then do so after the cross-[fol. 1182] examination and redirect have been completed.

If these documents that you are going to use affect the witness's testimony, you introduce them at the proper time during the course of the cross-examination.

All right, Mr. Stanford, will you take the stand now.

JOEL GIBSON STANFORD resumed.

The Court: You may make a little note of that, Mr. Elkins, and if they become pertinent to your cross-examination, introduce them at that time.

Cross-examination continued.

By Mr. Elkins:

Q. Mr. Stanford, you wrote Government's Exhibit 53, did you not?

(Document handed to the witness.)

Q. And that, as you see, sir, is dated October 30, 1957 and is addressed to Mr. Kirker.

I believe you discussed that the last day you were on the stand, Mr. Stanford.

A. Yes, sir.

Q. And you wrote that, did you not?

A. Yes, sir.

Q. And that was in answer to Mr. Kirker's letter of [fol. 1183] October 25, 1957, Government's Exhibit 52—which I am sure you can find there, sir—the letter of Mr. Kirker is dated, I believe you will see, October 25, 1957.

A. Yes, sir.

Q. Now, Mr. Stanford, can you identify this document——

Mr. Elkins: May I have this marked for identification, please.

(Marked Government's Exhibit 199 for identification.)

[fol. 1184] Q. I show you Government's Exhibit 199 for identification and ask you if you can identify that for us, Mr. Stanford.

A. This appears to be a draft.

Q. That is a draft of your letter to Kirker dated October 30, 1957?

A. Yes, it appears to be.

Q. That appears on the surface of it, does it not, to be the same as Government Exhibit 53 which is your letter to Kirker of October 30, 1957?

A. I do not quite understand what you mean by "the surface."

Q. Well, I asked you, sir, whether or not that was a draft that you had written of Government Exhibit 53 which exhibit is a letter to Mr. Kirker from you dated October 30, 1957.

A. Yes.

Q. That is, the document I just handed you is a draft of that, sir.

A. Yes, that is correct.

Q. This draft has some notations on it written by hand, is that true?

A. Yes.

Q. And referring to the notation on page 1 written by [fol. 1185] hand, that is yours, is it?

A. This writing here (indicating)?

Q. Yes, indicating the writing on the first page.

A. That is correct.

Q. In preparing this draft, sir, would you send it to Mr. Waterman for his approval?

A. Yes.

Q. And did he send it back to you with notations on the last page?

A. Yes.

Mr. Elkins: May I offer this in evidence now, your Honor, that it has been identified by the witness?

The Court: Is there any objection?

Received in evidence.

(Government Exhibit 199 for identification received in evidence.)

Q. Mr. Stanford, I show you Defendant's Exhibit 106B which is the mechanism of the Singer 401 machine. Will you briefly describe, sir, the features of this mechanism?

A. This mechanism has a plurality of cams which are driven by the main shaft of the machine, and it has a follower on this side (indicating) and a follower on this side [fol. 1186] (indicating), and by manipulating these levers you can cause one follower to be immobilized and you can operate the other one to select a cam. If desired, you can use both of the followers to select the cams in the order desired.

Connected with that is a plate called an integrating plate which is carried by a pitman connected to the needle bar so that the motion imparted to the followers by the cams would be transmitted to the needle bar.

Q. Now, sir, I understood you to explain that it has two followers, either of which can track any one cam or in combination can track any two cams, is that right?

A. That is correct.

Q. And if the result of that that information from such cams, a combination of cams, two cams, can be utilized in combination?

A. Yes, that is the purpose of the two followers.

Q. The purpose, you say, is that the two followers can engage separate cams and in that way get a combination of any two of the various cams there?

A. That is correct.

Q. May I show you Government Exhibit 107 which I [fol. 1187] believe is the mechanism of Gegauf No. 1 (handing).

A. Yes, sir.

Q. Will you describe briefly, Mr. Stanford, the features of the Gegauf No. 1 mechanism?

A. That has a plurality of cams which are driven by the main shaft of the machine, with a cam follower which may be positioned so that it will obtain the information from any cam, and that information is transmitted through the mechanism to the needle bar for the purpose of making ornamental stitches.

[fol. 1188] Q. It has one cam follower, Mr. Stanford?

A. Yes, it only has one cam follower.

Q. Now with the number of cams in this mechanism of Gegauf 1—I believe there are 12, is that it?

A. I haven't counted it—I will accept your count—yes, sir.

Q. How many different stitch patterns could be produced with that mechanism, Mr. Stanford—with that mechanism as you see it there?

A. One for each cam, as I see it.

Q. One for each cam as you see it? So that if it has 12 cams it can produce 12 different stitch designs; if it had 7 or 8 cams it could produce 7 or 8 stitch designs?

A. Yes, it would depend on the number of cams built into the machine.

Q. May I direct your attention again to the mechanism of Singer 401 as it appears there before you in Defendant's Exhibit 106-B.

How many different cams does that have?

A. Seven cams plus the removable cam.

Q. Assuming these seven cams mounted in the stacks for the moment, and the fact that the Singer 401 has two followers, how many stitch patterns could be produced or [fol. 1189] different stitch patterns could be produced with that mechanism, forgetting for the moment about the replaceable cam attachments?

A. By using both?

Q. How many different stitch patterns could be produced with a mechanism as you have described it here involving the two cam followers and the seven cams on the stack?

A. That would be something I will have to figure out mathematically.

The Court: How is all this material to your cross-examination? I do not quite——

Mr. Elkins: We will come to the point we want to make very soon, your Honor. We want to show the difference right now between these two mechanisms. It will only take a moment.

The Court: Assuming that there is a difference——

Mr. Elkins: Yes, your Honor.

The Court: —isn't the question here in this case: Did Singer honestly believe that they should acquire these

foreign patents in order to secure their patent position on their own applications, on their own patents? Did they honestly feel that they had reason to fear that their patents would be challenged by Gegauf and Vigorelli?

[fol. 1190] Mr. Elkins: I do not believe, your Honor, that that is in the picture—at least not the part of it that I am confining myself to.

The Court: I don't know what you mean by being "in the picture." That seems to me to be the issue in the case here—but go ahead, if you say it will only take a minute, perhaps it might be just as well to go ahead, so you go ahead.

Q. Mr. Stanford, could you give us an idea as to how many different stitch patterns could be produced with the mechanism as we have described it?

A. Well, I could say more than could be produced on the Bernina machine.

Q. Of the Gegauf 1 mechanism?

A. Yes.

Q. More. And could you give us any idea as to how many more, sir—the maximum that might be produced?

A. Well, whether or not you could combine all of these to produce a satisfactory change in variation of design I couldn't say, but you could play on 2, on 2 and 3, and 3 and 4—it would be a substantial number—I don't know.

Q. And they are used in combination so that you might get something, for example, like 6 times 7 or 42?

[fol. 1191] A. Perhaps.

Q. Directing your attention now, Mr. Stanford, to Defendant's Exhibit 106, which is a Singer 401 machine, and directing your attention specifically to the plate that appears on top of the machine, which gives the different designs, does that give you any kind of approximate idea as to how many stitch patterns can be produced in this 401 mechanism?

A. It shows 20 different variations here.

Q. And that does not employ all possible combinations of cams, does it?

A. No, it does not. Whether or not some other ornamental stitch can be produced by it I am not able to say.

Q. Wouldn't you say that it was substantially more

than 20 different stitch patterns that could be produced by combining any two of seven cams?

A. I would say that you could get variations, twenty variations.

Q. Or more than 20, sir——

A. Perhaps.

Q. —by combining the two?

The Court: All of this is interesting; it might be more interesting to a housewife than it is to me, but I do not [fol. 1192] know what relevance it has to this case: Maybe you can point that out to me so that I can grasp the significance of this testimony.

Mr. Elkins: Right now, if your Honor please.

The Court: All right.

Q. You have described, Mr. Stanford, the Singer 401 mechanism.

A. Yes, sir.

Q. And you have described it as having two followers, a plurality of cams and two followers that could be employed to engage combinations of any two cams.

Now isn't it true, Mr. Stanford, that Singer could exclude sales in the United States of machines having that mechanism as we have just described it by asserting its Johnson patent?

A. As far as the use——

Q. Isn't that true, sir?

The Court: Wait. Let him answer the question.

Mr. Pettit: He should be permitted to answer the question.

The Court: Is there an objection, Mr. Pettit? If not, restrain your impetuosity—and you, Mr. Elkins, let him answer. We will listen to Mr. Stanford's answer—to make it complete.

[fol. 1193] A. As far as the use of two cams on a mechanism of this kind, it could be excluded, but of course you can leave off——

Q. It could be excluded——

The Court: Wait. Please, I want the witness's entire answer.

A. Or you could leave off——

The Court: Don't argue with him. You complete your answer.

A. You could leave off one of the cam followers and then you would have no protection. You could use the same mechanism, using only one cam follower and you would have no protection—no patent protection.

Q. I want to make sure that we understand each other, Mr. Stanford. By asserting the Johnson patent Singer can exclude sales or prohibit sales in the United States of the mechanism like that shown in Defendant's Exhibit 106-B, and, as I say, by asserting the Johnson patent?

Mr. Pettit: Your Honor, I object to that. He has answered that question once.

The Court: We will let him answer it again.

Q. I am talking about a mechanism like the 401 which you have before you, sir, which is Defendant's Exhibit [fol. 1194] 106-B.

A. Only so long as it is not modified to use only one follower.

Q. Sir, if there were a machine sold in the United States which had the same mechanism as the 401 mechanism, which appears before you now, couldn't Singer exclude or prohibit sales of that machine by asserting its Johnson patent?

A. If it were the exact mechanism.

Q. Well, that is what I am saying. A mechanism like——

The Court: No, he says "exact" not "like." "Like" might be a substitute. "Exact."

Q. So it is true, is it not, that the Johnson patent covers the idea in this mechanism of using two followers whereby they may take information from two different cams at the same time and to employ any two cams in combination?

A. Yes.

Q. That is covered by Johnson?

The Court: The answer is?

A. Yes.

Q. And if a machine having that mechanism of two

followers capable of combining the intelligence of two sepa-
[fol. 1195] rate cams was sold in the United States, Singer could prohibit such sales, couldn't it, by asserting the Johnson patent?

A. Yes.

Q. Mr. Stanford, that could be done, couldn't it, whether Singer owned Gegauf 1 or Gegauf 2?

A. It could be done as long as Singer owned the patent.

Q. Owned the Johnson patent.

A. Owned the Johnson patent.

Q. That's right. Now Singer acquired the Gegauf 2 patent application, did it not?

A. It did.

Q. A machine that employed the Gegauf 2 mechanism—and by Gegauf 2 I am referring to the Gegauf patent; that has been commonly referred to by that expression—such a machine would have a plurality of cams, would it not?

A. Gegauf 2?

Q. Yes.

A. Yes.

Q. And the Singer 401 machine uses a plurality of cams also, is that true?

A. That's correct.

[fol. 1196] Q. A machine that employs the Gegauf 2 mechanism would have a cam that could engage any one of the plurality of cams, isn't that true?

A. The Gegauf 2 mechanism?

Q. Yes.

A. Yes, it had a follower for each cam.

Q. Yes, so it would be, as I put it, a cam that could engage any one of the plurality of cams?

A. A cam that——

Q. A cam that could engage any one of the plurality of cams.

The Court: Follower, you mean.

Q. A follower.

A. Follow, yes.

Q. And the answer?

Mr. Pettit: Will you read the question.

(Question read.)

Mr. Elkins: Will you please change "cam" to "cam follower."

Will you read the question as corrected.

(Question read as follows:

"Q. Yes, so it would be, as I put it, a cam follower that could engage any of the plurality of cams?")

[fol. 1196a] Q. Is that true in the Gegauf 2 machine?

A. Yes, sir.

[fol. 1197] Q. That is true of the Singer 401 machine also, is it not, that is, that there is a follower that can engage any of a plurality of cams?

A. Well, there is a difference there. In one case, in Gegauf No. 2, there is a follower for each cam. In Johnson there is not a follower for each cam.

Q. But Gegauf 2 and Johnson have this in common: each has a plurality of cams and each has a cam follower that can engage, in one session or another, a particular cam. They have that in common, do they not?

A. Broadly stated, yes.

Q. Stated broadly as I have stated it, sir, yes.

The Court: But they employ, do they not, a different means to accomplish that result?

The Witness: Yes. One is capable of taking the information from two cams and combining that information to develop a stitch. The other can only take the information from the cam selected.

The Court: And you recognize that in patent law that is a basic distinction?

The Witness: Yes, sir.

The Court: It is not what result the device accomplishes [fol. 1198] but the means employed to accomplish a result.

The Witness: Quite right.

The Court: Mechanical means.

The Witness: Quite right.

The Court: That controls whether or not there is an infringement.

The Witness: Quite right, sir.

The Court: All right. By the way, is Mr. Waterman a lawyer, a member of the Bar?

The Witness: No, he is not, sir.

The Court: Is he a member of the Patent Bar?

The Witness: No, sir. Mr. Waterman is an engineer.

By Mr. Elkins:

Q. Aside from patentable distinctions, Mr. Stanford, is it accurate to say that the Gegauf 2 mechanism has a plurality of cams and that the 401 mechanism has a plurality of cams?

A. That is correct.

Q. And isn't it also true that the Gegauf 2 mechanism and the 401 mechanism—and I am just stating things that they have in common—have a cam follower means whereby any one cam may be selectively engaged?

A. Yes.

[fol. 1199] The Court: Was the employment of a plurality of cams a device or a means well known in the art?

The Witness: Plurality of cams?

The Court: Yes.

The Witness: Broadly speaking, a plurality of cams was known, but the particular mechanism to be used with it for operating the needle bar or for vibrating the needle bar was new.

The Court: And therein lay a claim for invention.

The Witness: Yes.

By Mr. Elkins:

Q. The Singer 319 machine, Mr. Stanford, employs a plurality of cams, each one of which has its own follower; is that true so far?

A. That is true, sir.

Q. And the mechanism of the 319 machine also makes it possible to engage two or more cams at the same time in order to combine their intelligence; is that true?

A. That is possible with the 319 machine, yes.

Q. Is that mechanism, as we have described it, covered by the Singer Perla patent? And you may describe it again, if you like.

[fol. 1200] A. The Perla patent covers the idea of the

plurality of cams with independent followers for each cam and a handle on each follower so that they can be moved up either in combination or individually.

Q. And does Perla also provide for a means whereby intelligence of two or more cams may be simultaneously employed?

A. That is correct. It does, sir.

Q. Singer, then, can exclude from sales in the United States a machine with the mechanism as you have just described it by asserting the Perla patent; isn't that true?

A. Yes.

Q. Mr. Stanford, I would like to direct your attention to Government Exhibit 179, which is the Perla patent, and to page 1 thereof, and I would like to direct your attention to Government Exhibit 183 and to page 1 thereof, and this Government Exhibit 183 is, as you see, the Johnson patent, is it not?

A. Yes, this is the Johnson patent.

Q. Here is the Johnson patent and also the Perla patent. The Johnson patent relates to the 401 mechanism and the Perla patent relates to the mechanism of the Singer 319 machine, isn't that true?

[fol. 1201] A. Yes. One is the 401 and one is the 319.

The Court: Is it the 319 or the 306?

Mr. Elkins: 319, your Honor.

The Court: The 306 was——

The Witness: The one with the removable cam.

The Court: All right.

By Mr. Elkins:

Q. Now, sir, both paragraphs to which I have directed your attention, one in the Johnson patent, the other in the Perla patent, read exactly the same, do they not?

A. Yes.

Q. They are in common, is that right, sir?

A. They relate to the same thing, yes. They set forth——

The Court: What paragraph are you pointing to, so we can identify it? Page 1, column 2 or column 2?

Mr. Elkins: Column 1.

The Court: What lines? There are little numbers there on the side.

Mr. Elkins: 15 to 20, your Honor.

The Court: That is the opening paragraph.

Mr. Elkins: That's right, your Honor.

[fol. 1202] The Court: They are identical, apparently; identical language.

By Mr. Elkins:

Q. And that language, for the record, reads, does it not, Mr. Stanford:

> "This invention relates to improvements in ornamental stitch sewing machines and has for an object to provide such a machine with a novel mechanism whereby the machine can be made to produce a large number of ornamental designs without any change in the construction of the machine."?

The Court: That is what we call boiler plate. You pull that out of the case and put it in for other paragraphs. It means nothing. It is like the lawyers pick out a paragraph that they put in every brief they hand the judge. It is boiler plate.

Mr. Elkins: My point here, your Honor, is the fact of the similarity, to the extent that there is a similarity, between the Singer 319 machine and the Singer 401 machine and the material which both have in common.

Mr. Pettit: Your Honor, I would like to just interpose one objection here unless he indicates for the record that he is not reading from a claim of either patent. I don't think he [fol. 1203] has indicated yet where this reading comes from.

The Court: He is reading right from the description. It is apparent that Mr. Stanford's name is signed as the patent attorney on both of the patents.

Mr. Pettit: That is correct.

The Court: And he used a boiler plate, like a lawyer picking some boiler plate out and putting it in the brief he gives to Judge X and then giving the same boiler plate to Judge Y, hoping they both don't notice it is boiler plate.

Mr. Pettit: I just want the record to indicate that he is not reading from a claim.

The Court: No, it is the opening paragraph. He does not say it is in the claim.

Mr. Elkins: We do not agree with your Honor that this is boiler plate. It relates to a patent and cannot be boiler plate.

The Court: You can give it another name that is more fancy than that, but that is the effect of it. Mr. Stanford wrote both of these applications, his name is signed as the patent attorney, and I guess he said to his girl, "Copy that first paragraph," the same as you would say, "Copy this [fol. 1204] page and this paragraph from this brief."

Mr. Elkins: If your Honor please, indicating, if you will, what the two machines had in common or at least certain phases of the two machines which were in common, and we will try to tie that point to something else in just a moment.

By Mr. Elkins:

Q. The mechanism of the Perla machine and the subject matter of the Perla patent as you have described it, Mr. Stanford, uses——

The Court: I don't like to interrupt you, but you might notice that the next paragraph is also identical in both patents, so it is not just the first; it is the first two paragraphs. He used more boiler plate than I thought he did. Look at it and you will see. The first two paragraphs in both of these patents, the Perla patent and the Johnson patent, are identical, and I guess, if I went through it, I could find more.

You can get back now.

Mr. Elkins: We are still on the point, your Honor, of pointing out the common ground of the similarities of these two machines.

By Mr. Elkins:

[fol. 1205] Q. The 319 machine of Singer, like the Singer 401 machine, has the ability, has it not, of employing intelligence from various cams at the same time?

A. It does.

Q. If any machine was sold in the United States that had the mechanism of the 319 machine and that part of it which involved the mechanism as we have just described it, that is, the idea of using a plurality of cams, a cam follower for each cam, means whereby intelligence of two or more different

cams could be taken at the same time by two or more of the followers, Singer could, could it not, prevent its sale by the assertion of the Perla patent?

A. I think the Perla patent is limited to having individual handles, as I recall it now, for each cam follower.

The Court: Look at 4 and 6 of the statement of facts (handing). I think you are a little confused.

Suppose we have a five-minute recess.

(Recess taken)

[fol. 1206] Q. The embodiment of two followers having the ability to combine intelligence from two different cams at the same time is a significant embodiment, is it not, Mr. Stanford?

A. I would say it is more a remnant because it does not go to the basic idea of selecting a cam. In other words, the basic patterns of the 401 are the ones that are selected from a single cam at the time.

Q. There is a basic feature, is there not, and I have asked you this before and I will ask you once more, of using two followers in Johnson in order to combine information from two or more cams in order to get a greater variety of stitch patterns than you would get in the Gegauf 1 mechanism?

Mr. Pettit: Your Honor, I suggest that there is a limit as to the number of times he can ask him the same question.

The Court: Let him ask it again. It might impress the court. Constant repetitions sometime serve that purpose.

Q. The 401 has that feature, sir?

A. Yes, it has that feature.

Q. Thank you very much. And that feature, as you described it or as we described it is, of course, a patentable [fol. 1207] feature, is that true?

A. That's correct.

Q. Am I right in understanding, Mr. Stanford—and correct me if I am wrong—that the reason for Singer, according to what Singer now says, in acquiring the Gegauf 1 patent was to prevent infringing machines from being sold which were competitive with the Singer 401 machine?

Mr. Pettit: Just a moment.

The Court: We will strike out "according to what Singer

now says." With that deleted, the question may be answered.

Mr. Pettit: And may he read it to the witness?

The Court: Is that what you are objecting to?

Mr. Pettit: Yes, that is it.

The Court: All right.

(Question read as follows:

"Am I right in understanding, Mr. Stanford—and correct me if I am wrong—that the reason for Singer in acquiring the Gegauf 1 patent was to prevet infringing machines from being sold which were competitive with the Singer 401 machine?")

A. The purpose in acquiring it was to protect the investment and the jobs that we had here——

[fol. 1208] Mr. Elkins: Now——

The Court: Wait. Let him finish his answer. If you don't like it, you may move to strike it out.

A. —and the realization that the mechanism here could be duplicated if you leave off a second cam follower or if you immobilize it even.

Mr. Elkins: If your Honor please, that answer is not responsive to the question.

The Court: I think it is.

If you want a categorical answer, we will try to get it for you, but I think it is responsive. It is very informative, in any event.

What was the purpose of Singer acquiring the Gegauf No. 1?

The Witness: Gegauf No. 1 covers the idea of a single cam follower which may be engaged with any of the cams. Johnson has that feature in it. If you take off the second follower or if you immobilize it, then you have to be protected by the Gegauf patent; otherwise there would be no infringement.

The Court: What was the reason or the motive behind Singer acquiring the Vigorelli patent?

The Witness: We did not acquire——

The Court: Getting a license on the Vigorelli patent.

[fol. 1209] The Witness: In that case, in foreign countries

Vigorelli had covered the idea of two cams being sensed at the same time and imparting that information to the needle bar.

Also in certain foreign countries they had priority on the single follower in which you could select a cam.

The Court: What was the reason that prompted Singer to acquire a license for Gegauf No. 2?

The Witness: In Gegauf No. 2 we had—that covers the Messerschmitt machine, and we had reached an agreement with Messerschmitt in 1957 that was very important to Singer. We were selling about 65,000 machines in Europe of the 319 type which was covered by the Messerschmitt patents in Europe, and so we licensed them in the United States under our patents—the Perla and the Way patent, and as Gegauf No. 2, when issued, would cover that intelligence, they would no longer be able to manufacture it in the United States without the possibility of it infringing the Gegauf No. 2 patent, so we acquired that patent.

Mr. Elkins: Mr. Stanford, isn't it true that a machine that was built under Gegauf 1 would be no more competi-
[fol. 1210] tive as to Singer's machine 401 than would a machine built under Gegauf 2?

The Witness: You are asking me, sir, a sales question. You are asking me——

The Court: What do you mean by "competitive"? Competitive in what way? It is not a term of art in patent law.

Q. The only difference between the Gegauf 1 mechanism and the Gegauf 2 mechanism is that in Gegauf 1 there is one follower which selects any one cam, and that in Gegauf 2 each cam has its own follower? Isn't that the essential difference?

A. That is the essential difference.

Q. Do you wish to give the impression that a Gegauf 1 machine would be greater competition as against the Singer 401 than the Gegauf 2 mechanism?

Mr. Pettit: Your Honor, I object to that question because he has given no testimony on that and no inference on that. If counsel wants a market man, we will have him on the stand—probably next.

The Court: We will let this witness answer it if he can. Objection overruled.

Mr. Pettit: It seems to me he should be qualified as to whether he is a market man.

[fol. 1211] The Court: If he cannot answer it he will say so.

The Witness: Do you mind repeating the question?

(Question read.)

The Court: By that I take it he means sales competition in the marketplace.

A. I am sorry. I couldn't answer that question. I wouldn't know.

Q. Well, all three mechanisms employ a plurality of cams, don't they?

A. Yes.

The Court: We have had that five times now.

Q. And all of them employ a means whereby a cam follower engages one of the plurality of cams, isn't that true?

A. Yes.

Q. All three produce, through the use of the cam and the follower, zigzag stitch patterns and ornamental stitch patterns?

A. Yes.

Q. And in all three the operator may change from one stitch pattern to another stitch pattern without replacing a cam; isn't that true?

A. That's true.

[fol. 1212] Q. Do you still say that Singer acquired the Gegauf 1 patent to assert it for exclusion but that it did not buy the Gegauf 2 patent for exactly the same purpose?

The Court: Objected to as argumentative in form—by the court.

But we will let the witness get in the argument and answer it.

Mr. Elkins: A very sound objection, your Honor.

The Court: You can answer that question if you can.

Do you want the question read back?

The Witness: Yes.

(Question read.)

A. It was not for exactly the same purpose.

Q. May I direct your attention to Government's Exhibit

180, Mr. Stanford. May I direct your attention there to page 47 and page 48.

(Document handed to the witness.)

The Court: Suppose we have on the record what Exhibit 180 is. What is Exhibit 180?

Mr. Elkins: This exhibit, as I described it, is the——

The Court: The Perla file?

[fol. 1213]. Mr. Elkins: —Perla file wrapper.

A. This is page 49 that you are referring to—page 49?

Q. I believe I referred to page 47 and 48.

At page 47 of the Perla file wrapper, that shows a petition to make special, does it not?

A. Yes, it does. This is a petition to make special.

Q. And it was signed, I believe, by Mr. Williams of the Singer patent department.

A. That's correct.

Q. And may I direct your attention, sir, to page 49 of the same exhibit, which is an affidavit in support of a petition to make special?

A. Yes.

Q. That is an affidavit by persons in the Singer organization, is it not?

A. Yes, an affidavit by Mr. Perla.

Q. And on page 51 there begins an affidavit in support of the petition to make special, which is signed by Mr. Williams?

A. Yes, sir.

[fol. 1214] Q. This affidavit, referring to the one by Mr. Williams, refers, does it not, to sale in the United States or sales in the United States of a German-made sewing machine which is sold under the name and style of Bell-Messerschmitt.

The affidavit also states, does it not, that such a machine is within the claims of the subject matter of the Perla application?

A. Yes.

Q. And isn't the plea for the Patent Office to make this Perla application special in order to enable Singer to exclude the type of machine there referred to?

A. That, of course, was to get into an interference with Messerschmitt if Messerschmitt had an application pending in the United States. Yes, we were anxious to get this out for that purpose.

The Court: What is the purpose of a petition to make special?

The Witness: Your Honor, when an application is pending in the Office, and there may be another application pending, and you feel there is, and you have a large investment and expending a considerable amount of money, you petition to make special so that the Office will act on that on an earlier [fol. 1215] date than they will normally act, and in so doing secure the allowance of claims which can be put into interference with the other party if he has a pending application claiming the same subject matter.

In short, it is a petition for an early action on the cases to determine the rights of the parties.

Q. Directing your attention again, sir, to page 51 of this same exhibit—and that is, again, the affidavit of Mr. Williams; is that true, sir?

A. Yes, this is the affidavit of Mr. Williams.

Q. Isn't it so, that in support of his application to make special, he sets forth four reasons why he believes that the subject application should be made special and that the prosecution thereof should be expedited as much as possible?

A. Yes.

Q. And reason No. 1, do you agree, is that since the filing of the Perla application there is introduced for sale in the United States a German-made sewing machine sold under the name and style of Bell-Messerschmitt; isn't that true?

A. That is in substance what he says.

[fol. 1216] Q. Yes. And isn't it true that the substance of the second reason, labeled there No. 2, that he examined the machine and found that it had a mechanism which was similar in design and function to that disclosed and claimed in the Perla application?

A. Yes, that is the second reason.

Q. And reason No. 3 is in his opinion many other claims then contained in the Perla application would be infringed by the Bell-Messerschmitt machine?

A. Yes.

Q. And the further reason that he believes that the Perla application contains claims which are allowable; is that right, sir?

A. That is right.

Q. Is there anything in there, Mr. Stanford, assigning as a reason for this petition to make special anything about Singer trying to get into an interference with Messerschmitt?

A. No, but that is the purpose of it.

Q. I beg your pardon—no?

A. No.

The Court: That is the result of the petition to make special, isn't it?

The Witness: Yes, to get the Patent Office——

[fol. 1217] The Court: It brings up the question of interference.

The Witness: Yes.

Q. The Perla application there referred to had a mechanism involving, as we have said, a plurality of cams and a number of followers, one for each cam?

A. Yes.

Q. And you wanted to push for an interference between that Perla application and something that Messerschmitt might have filed in the United States?

A. Yes, we wanted a determination of the rights of Singer under its patent as early as possible because we were manufacturing the machine here in the United States.

Q. Mr. Stanford, Gegauf 2 or the subject matter of Gegauf 2, in relation to that of your Perla application, could have afforded you an interference, could it not?

A. If we had owned it?

Q. If you had owned it? You did own the Perla application, did you not?

A. Yes. I am sorry. I thought you said "Gegauf."

Q. I am talking about the subject matter of Gegauf 2, yes. Isn't there subject matter——

The Court: He said: yes, if they had owned Gegauf 2 at [fol. 1218] the time. That was his answer. But they did not own Gegauf 2 at the time.

Is that correct?

The Witness: That is correct.

Q. Gegauf owned it, isn't that true?

A. Yes.

Q. It was pending in the United States Patent Office, was it not?

A. The application?

Q. Yes.

A. For this feature?

Q. Yes.

A. Not to my knowledge, no, sir. It was in the claims of another case, but no application had been filed on this particular feature.

Q. No application had been filed by Gegauf on that particular feature?

A. By Gegauf on this particular feature. That was not filed until 1957, if my memory serves me correctly.

Q. It was not filed until that date, if your memory serves you correctly, as a divisional application.

A. Yes.

Q. But isn't it true that the subject matter of it was con- [fols. 1219-1221a] tained in the Gegauf patent application that was pending in the United States in May, 1956?

A. The claims in Perla were quite narrow. You have to consider that the Messerschmitt machine and the Perla machine or the 319 machine were practically identical. They had the little levers, they had the little keys on top, and they were spring urged, and they could select any of the cams either individually or collectively.

Q. Can we move away, sir, if you will, please, from the machine into the Perla application? And wasn't there subject matter in the Perla application that belonged to Singer that was common to subject matter that was contained in the Gegauf United States patent application? I don't care whether it is a divisional claim or not, sir.

A. Was there subject matter——

Q. In the Singer Perla patent application in the United States that was common to subject matter contained in the Gegauf United States patent application?

A. Yes, I think that is true, sir.

Q. Was the Gegauf 2 and Singer's Perla application ever in interference in the United States Patent Office?

A. Not to my knowledge.

[fol. 1222] IN UNITED STATES DISTRICT COURT

UNITED STATES OF AMERICA

vs.

THE SINGER MANUFACTURING COMPANY

May 23, 1961, 10:30 A.M.

JOEL G. STANFORD resumed.

Cross-examination Continued.

By Mr. Elkins:

Q. Isn't it true, Mr. Stanford, that neither Gegauf 1 patent nor the Gegauf 2 patent—and I am speaking of the United States patents—relate to combining intelligence from two or more cams?

A. That is correct.

Q. And that therefore the mechanism of each Gegauf 1 and Gegauf 2 gives only one design per cam?

A. That is correct.

The Court: You mean one cam follower, do you?

Mr. Elkins: No, one cam. If it has six cams you get six designs.

If it has eight cams you get eight designs.

The Court: Oh, I see, you mean stitch designs?

Mr. Elkins: Stitch designs.

The Court: Excuse me.

Mr. Elkins: Excuse me, Judge.

[fol. 1223] Q. And it is true, is it not, Mr. Stanford, that both the Johnson patent and the Perla patent relate to combining cam intelligence in order to obtain a number of stitch designs in excess of the number of cams employed in the respective units?

A. That is correct.

Q. Sir, you are acquainted with the Singer-Messerschmitt licensing agreement?

A. Yes.

Q. Under that agreement, which is Government's Exhibit 86, Singer did not license Messerschmitt under any specified patents, did it?

A. No. It licensed the subject matter disclosed in a series of drawings.

Q. That is right, and the agreement reads that Singer will not bring any infringement action against Messerschmitt under the rights derived from patents now issued or to be issued in any country with respect to the subject matter disclosed in the three drawings, to which you have just referred; that is true?

A. That is correct.

Q. And are these the three drawings, Mr. Stanford, referred to in the agreement (handing witness)?

A. Yes.

[fol. 1224] Q. One of those drawings covers a manually operated machine, does it not?

A. Yes, it does.

Q. And another covers a replaceable cam machine?

A. May I see the other one?

Q. Yes (handing).

A. Right.

Q. A straight stitch machine?

A. One is a straight stitch machine and one is a manually operable zigzag machine.

Q. So as to those you just mentioned, they had nothing, absolutely nothing to do with the Perla application of Singer, did they?

A. No, the straight stitch and the manually operable had nothing to do with the Perla application.

Q. So that as far as the consideration for this agreement, which is furnished by Singer, Singer agreed not to sue Messerschmitt any place in the world on any patents it owned any place in the world relating to the straight stitch machine and the manually operated zigzag machine?

A. There was a German patent on the manually operable zigzag machine, and of course the Way patents on the motor support.

[fol. 1225] The Court: Which one is the machine-operated? Is it 54 KE? On the lower right corner are the numbers.

The Witness: Yes, 54 KE.

The Court: That is the one that you were slightly interested in, is that correct?

The Witness: Yes.

By Mr. Elkins:

Q. That is the one that uses the built-in cams?

A. Yes.

Q. And the drawing designated as K1 52 KE is which machine?

A. That is the manually-operated zigzag machine.

Q. And the other drawing designated as K1 53 KE is the straight stitch, is that true?

A. Yes, sir.

The Court: Is it entirely straight stitch? Isn't that a cam shown there in the Ruckseite, as you call it?

The Witness: I think that is the belt drive, your Honor.

The Court: The belt drive. Yes, you are right. Excuse me.

Q. In addition to what Singer supplied to Messerschmitt [fol. 1226] by way of consideration under this license, it is also true, is it not, that claims issued to Singer on the Perla application in the U. S.?

A. In the United States. Yes, Perla obtained claims in the United States.

Q. And Messerschmitt, at the time of this agreement, had a machine that was covered by, at least to some extent, the Perla patent as it ultimately issued?

A. Yes.

Q. And under this agreement Messerschmitt received all rights to that?

A. They were privileged to make that in the United States.

Q. In the United States. This agreement also provides, does it not that Singer would not institute any opposition, nullity or invalidation proceedings against the Messerschmitt applications?

A. Yes.

Q. And it also provided that Singer would immediately withdraw any such proceeding if it had already been instituted?

A. Yes, with a provision.

Q. With a provision, sir?

A. That if they became involved in Patent Office priority [fol. 1227] determining proceedings, such as a United States interference or Canadian conflict proceeding, then both par-

ties would work together to settle it in accordance with the laws and regulations of the Patent Office concerned.

Q. Relative to the proceedings whereby Singer agreed not to institute an opposition, nullity or invalidation proceeding or to immediately withdraw it if such had been already instituted, Singer did, indeed, pursuant to that promise, withdraw an opposition to a Messerschmitt application?

A. Yes, as I recall, it did.

Q. And that was in Germany, do you recall, Mr. Stanford?

A. That is my recollection, yes.

Q. Can you say definitely that it occurred?

A. I would prefer to have my memory refreshed.

Q. All right, sir, we will do it.

I refer you, Mr. Stanford, to Government's Exhibits 82, 91 and 92 (handing).

A. Yes.

Q. That refreshes your recollection?

A. Yes.

Q. So that subsequent to this Singer-Messerschmitt agree-
[fol. 1228] ment as we have discussed it, Singer did perform under the section to which we have just referred by withdrawing an application?

A. Withdrawing an opposition.

Q. Withdrawing an opposition. I am sorry.

A. Yes, Singer did withdraw its opposition proceeding.

Q. And pursuant to the agreement, sir?

A. Yes, pursuant to the agreement.

Q. Didn't Singer also provide, as further consideration to Messerschmitt, rights under other patents other than Perla? The Way patent?

A. The opposition proceeding in Germany related to a construction in which the manually-operable means is shown to be old in the old 206 machine, and that patent had just about expired, and that was the one that we withdrew in Germany, as I recall.

Now I am sorry, I may not have answered your question directly.

Q. Perhaps not, but under this Singer-Messerschmitt agreement as we have discussed it here, Government's Exhibit 86, Singer gave rights to Messerschmitt on any patents it had covering the three machines which were demonstrated by the attached drawings which we have already discussed?

[fol. 1229] A. Yes.

Q. And as well as involving Perla and also involving the Way patent, did they involve any other patents?

A. The Way and the Perla——

Q. And the Tiesler patent?

A. Tiesler?

Q. Tiesler.

A. Tiesler German patent, but that had nothing to do with the United States.

Q. No. But it had to do with the agreement, and Singer gave rights to Messerschmitt under that?

A. That's right.

Q. The Messerschmitt machine involved combining intelligence from two or more cams, is that true?

A. It had that particular feature in it.

Q. Your Johnson patent has a subject matter which involves taking intelligence from two cams at the same time?

A. That's correct.

Q. As well as having the Johnson patent in the United States, you also had filed, I believe, corresponding patents in other countries?

A. Yes.

[fol. 1230] Q. And do you know in how many other countries, sir?

A. I couldn't say offhand, no.

Q. Well, would you say in all of the principal countries?

A. I would say the principal manufacturing countries, yes.

Q. So this Singer-Messerschmitt agreement that we are now discussing also gave to Messerschmitt rights under the Singer Johnson patent, do you believe?

A. In the United States. In foreign countries the Johnson patent was behind the Vigorelli patent on sensing two cams simultaneously.

[fol. 1231] Q. But as a result of this agreement, Government's Exhibit 86, Singer did supply Messerschmitt with rights under the Johnson patent?

A. In the United States.

Q. In the United States?

A. Yes, in the United States.

Q. And this agreement, Singer-Messerschmitt, Government's Exhibit 86, as we have noted, provided that Singer gave rights to Messerschmitt relative to those drawings on

patents now issued or to be issued in any country. That is true.

A. (Examining) "Now issued or to be issued", that is correct.

The Court: With respect to the annexed drawings?

The Witness: Yes.

Mr. Elkins: That is right.

Q. So that whatever Johnson got in a foreign jurisdiction would be there for the use of Messerschmitt in relation to its machine?

A. If Johnson——

Q. If Johnson got anything. Now during the meetings between Singer and Gegauf relative to the assignment of [fol. 1232] his United States patent applications to Singer, Singer or its representatives told Gegauf, did it not, that his applications were weak standing alone?

A. That is in the correspondence.

Q. Would you answer that—all right, go ahead and answer it with a "Yes" or "No", please.

A. May I have the question read back? I do not know that it can be.

(Question read.)

A. I do not know that that was ever told Mr. Gegauf.

The Court: Did you tell him that his applications, his United States applications were weak, without telling him anything about "standing alone", in your opinion?

The Witness: When we originally negotiated for the license agreement we naturally took the position that in his negotiations any patents that he would get or any patents that he received in foreign countries were weak.

Mr. Elkins: May I ask you to read, Mr. Reporter, the witness' answer to my question?

(Record read.)

[fol. 1233] Q. Didn't you have good reason to believe that it had been told to Mr. Gegauf, Mr. Stanford? Didn't you have good reason to believe that it had been told to Mr. Gegauf?

A. It appeared in the correspondence, sir, and I was not present at any time during this discussion where those words were used.

Q. When you say "I do not know that that was done", are you using an extremely high test for yourself, and are you merely saying that you were not present when it was done?

A. All I can say, sir, is it is in the correspondence.

The Court: Did you mean by your answer that it was not done within your personal knowledge or in your presence?

The Witness: That is exactly what I mean, within my personal knowledge.

The Court: Or in your presence?

The Witness: Or in my presence.

Q. But you have seen, heard or read something that indicated to you that it had been done?

Mr. Pettit: I object to that, your Honor, unless he shows him some document referred to.

[fol. 1234] The Court: Objection sustained.

Q. Well, hadn't you been told that it was done?

A. Have I been told that that was done?

Q. Yes.

A. Have I personally been told?

Q. Yes, by anyone in Singer—by Mr. Waterman or anybody, that it was done.

A. No, I don't know that Mr. Waterman ever said it was done.

Q. But you were told by Mr. Waterman that he, Mr. Waterman, had instructed Mr. Kirker to so inform Gegauf; is that true?

A. As I recall, there is a cabl gram that has those words in it.

May I see the document, sir?

Q. I believe you are referring to Government's Exhibit No. 50. I show it to you (handing witness).

A. (After examining) Yes, it says that.

Q. That is, you were told by this cable from Mr. Waterman that Mr. Waterman had told Kirker to tell Gegauf that his, Gegauf's applications——

Mr. Pettit: Your Honor——

Q. —were weak standing alone?

Mr. Pettit: I object to that statement. It is a complete [fol. 1235] misquotation of the cablegram. It is a complete misquotation of the testimony.

Mr. Elkins: I doubt that very much.

Mr. Pettit: Will you read the cable?

The Court: Why don't you quote the cablegram?

Objection sustained.

Q. In this cable from Mr. Waterman to you, Mr. Stanford, which is stamped—apparently a receipt stamp by Singer, dated October 24, 1957—Mr. Waterman said "Again Emphasized for Kirker to Tell Willi that Application and Division Is in Our Opinion Weak Standing Alone".

Is that true?

A. Yes, that is true.

Q. And the "Willi" referred to is the patent attorney for Mr. Gegauf; true?

A. That is true.

The Court: That is that famous "leak" business which you now accept to be "weak", is it?

Mr. Elkins: We find that "weak" is just as synonymous as "leak".

The Court: I mean the sinister aspect of "leak" has now disappeared; it is now "weak" which you say is just as [fol. 1236] sinister as "leak"?

Mr. Elkins: We say that neither one changes the substance of the message, your Honor.

The Court: All right, but I recall that you made quite a point of this, in your description of this telegram as to its significance. Now apparently you have abandoned that, have you?

Mr. Elkins: No, your Honor. I was just about to say that we would have made the same point had a copy of it demonstarted the "w" above the "l". If our copy said "weak" I do not think we would have changed any of our comments in relation to it.

The Court: I think I understand the situation perfectly.

Mr. Elkins: You understand, your Honor, this was the document to which the defendant suggested perhaps impro-

priety on the part of the government because we said at the time one copy that we had of the cable had no "w" appearing there, that a man with less than 40-40 sight could see —or 20-40, I should say.

The Court: You want me to read this as "weak"?

Mr. Elkins: "Weak", yes, your Honor.

The Court: All right, as long as I know what you want me to do.

[fol. 1237] Mr. Elkins: The other copy shows that the "1" was crossed out a "w" written over it.

The Court: All right.

Q. Do you recall, Mr. Stanford, that you, shortly prior to October 24, 1957, were in Europe with Mr. Waterman, that is, shortly before Mr. Waterman sent this cable to you?

A. Yes, we were in Europe together.

Q. And it was just a few days, was it not, prior to the receipt of this cable from Mr. Waterman?

A. Well, I couldn't say how many days, sir, but it was some time prior to the receipt of this cable.

Q. And during that time you were with Mr. Waterman and you were with Mr. Kirker and you were negotiating with Mr. Gegauf?

A. That is correct.

Q. As you recall?

A. Yes, sir, as I recall.

Q. And then do you recall when Singer thought that it was pretty close to an agreement, I believe you came home and Mr. Waterman went to Frankfort and Mr. Kirker was to take over and to talk with Mr. Gegauf and to work out the final agreement; is that accurate?

A. Mr. Kirker was not present during the discussions [fol. 1238] with Mr. Gegauf. We left Zurich and went to Geneva and presented to Mr. Kirker the form of the agreement and asked him to see Mr. Willi and get his approval of them.

Q. Prior to doing that you had discussions with Kirker, did you not?

Do you recall, sir, that you went over to Europe, I believe with Mr. Waterman, and before sitting down and talking with Gegauf you had discussions—and correct me if I am wrong—with Mr. Kirker?

A. Yes. That was prior to the agreement with Mr. Gegauf.

Q. Wasn't it prior——

A. Prior to the license agreement with Mr. Gegauf.

Q. For the purposes of possibly refreshing your recollection, Mr. Stanford, I would like to show you Government's Exhibit No. 48, which has a date or two in it (handing witness), and I ask you whether it refreshes your recollection concerning you having conversations with Kirker in October, 1957, on or about the 15th or 16th, prior to the time that you started to negotiate in that month wih Mr. Gegauf?

A. This only says that he is free, and if we had called him—as I recall, this refers to the fact that we were going to [fol. 1239] see Mr. Gegauf but Mr. Willi, his attorney, could not be present, so we did not ask Mr. Kirker to come from Geneva to Zurich and be present at the meeting, so at the meeting or prior to the meeting we did not see him. We saw him after the meeting, as I recall.

Q. Now in the cable to which we have previously referred, which is Government's Exhibit 50, you will note that in the particular part of it that we quoted, Mr. Waterman wrote again "Again emphasized" (handing witness).

(The witness examines)

Q. Isn't that true?

A. Yes, this says "again"—"again".

Q. "Again emphasized"—"Again emphasized for Kirker to tell Willie that application and division is in our opinion weak standing alone".

A. That is what the cable says. Kirker may have said that at that time.

Q. Mr. Waterman is speaking for himself when he says "again emphasized" for Kirker to tell Gegauf this, is he not?

A. I don't know.

Q. This cable, in saying what it does about the Gegauf [fol. 1240] application and division being weak standing alone, has reference, does it not, according to your understanding, to Singer's patents and applications—patent applications?

A. No. This to me was—Mr. Waterman apparently must have been irritated over the fact that Gegauf is making all kinds of demands after he——

Q. I do not believe that that is an answer to the question.

The Court: Why don't you let him finish his answer? If you do not like it, move to strike it out. We do not have a jury here.

Go ahead, finish your answer.

A. (Continuing) Mr. Waterman must have been irritated over the fact that he thought he had reached an agreement with Mr. Gegauf. Mr. Gegauf had turned around and started making all kinds of demands here and there, and in order to throw up some defense of some kind, he said he may—I don't know just what it means—he says "Tell him the patents are weak standing alone".

[fol. 1241] Mr. Elkins: I move that that be stricken, your Honor. I think that hidden in there some place is the answer "I do not know what it means."

The Court: That's right. It is just an expression of his belief, and we will let it stand as simply that. It is his opinion and not his knowledge of the fact.

Q. Was your understanding of the matter clarified at all by this paragraph in Government's Exhibit 199, which is a draft dated October 29, 1957, sort of a proposed letter by you to Mr. Kirker, and by this paragraph on the last page which is written in pen as a possible insertion into the letter:

> "We are only repeating when we say again that standing alone we are still of the opinion, even after have examined the file at Washington the patents ultimately secured are of doubtful value, but that in conjunction with others that we have, they assume greater worth, and then only after we have expended a considerable sum to prove their worth."

You have stated, and as it appears, this was a letter going to Mr. Kirker, who then was, I believe you will agree, talking with Mr. Gegauf on behalf of Singer relative to the trans-

[fol. 1242] fer of the Gegauf patent applications to Singer.

A. Yes, this is a letter, draft of a letter, proposed letter, to Mr. Kirker.

Q. And didn't that give you an idea as to what this talk about the Gegauf patent applications standing alone being weak meant?

A. Well, I didn't agree that it was correct and canceled it out and didn't send it over to Mr. Kirker.

Q. Do you agree, sir, that when it states, as it does, "We are only repeating when we say again that standing alone we are still of the opinion, even after have examined the file at Washington the patents ultimately secured are of doubtful value, but that in conjunction with others that we have, they assume greater worth, and then only after we have expended a considerable sum to prove their worth," clearly demonstrates it has all been said to Kirker before?

A. Yes, I think you could say that from it, but this is simply a bargaining proposition.

Q. That's all that I am asking you for, Mr. Stanford. The arguments, I suppose, will be made by able counsel.

The Court: Well, this is the time for interrogation not [fol. 1243] for speeches and not for opinions of this witness either or what he thinks. Next question.

Q. Mr. Stanford, I believe you described the main function of the Singer patent department as to examine machines of Singer to determine whether or not they conflict with any patents known to you.

A. Yes, sir, that's correct.

Q. Do you mean that the patent department waits until the machine is actually made before it gives an opinion?

A. No, sir. The patent department sees the machines as soon as they are in their infancy, when they are just beginning, the concept is started, and then we follow that all the way through until its final form in which we expect to manufacture it, and anywhere along the line we make suggestions or call attention to patents which may be infringed, and ultimately, when the machine is in its final form, we write a report which reports the condition to the company at the time that they are deciding to begin to manufacture or to adopt the machine, as generally we call it.

Mr. Elkins: May we have a five-minute recess, your Honor, at this time?

The Court: Yes.

[fol. 1244] (A short recess.)

By Mr. Elkins:

Q. Mr. Stanford, as I recall your testimony, and correct me if I am wrong, you testified that the decision to proceed before the United States Tariff Commission that was made

on the basis of patents was made by Singer in about May 1958.

A. Yes, that's correct, yes.

Q. Did you have anything to do with the formulation of that decision?

A. Did I?

Q. Yes.

A. I would have to ask you, sir, what you mean by formulation of the decision.

Q. Well, let me change it to: Were you in on any discussion relative to so proceeding?

A. Yes, I was.

Q. And there were conferences relative to the matter, were there?

A. With the attorneys, yes.

Q. When you say with the attorneys, you mean the attorneys whom you mentioned the other day, Mr. Brumbaugh, I think?

A. Mr. Brumbaugh and Mr. Colburn.

[fol. 1245] Q. Was there discussion among representatives of Singer as to whether or not you would go to other counsel with this matter of possibly proceeding before the Tariff Commission?

A. They were the counsel, sir. Mr. Brumbaugh and Mr. Colburn were the counsel.

The Court: I think we had testimony that Mr. Brumbaugh recommended this man Colburn as being someone very experienced in customs work and tariff proceedings.

Mr. Elkins: That is true, your Honor.

Q. Attorney Brumbaugh, is he associated with Singer as a resident counsel?

A. No. Mr. Brumbaugh is a member of the firm of Brumbaugh, Free, Graves & Donohue here in New York City.

Q. An outstanding firm. We know it well.

The Court: He thanks you for the tribute, in which I join.

Q. Wasn't there any discussion between representatives of Singer relative to so proceeding before Singer went down to see Mr. Brumbaugh?

A. As I recall, sir, the first conversation that occurred was in Mr. Brumbaugh's office, and even the question of the possibility of bringing such an action came up at that time, [fol. 1246] as I recall.

The Court: You were discussing about the effectiveness of stopping infringing importations?

The Witness: In the United States, yes.

The Court: And about the difficulty of locating the source of supply of the various retailers?

The Witness: And the many suits that would have to be brought and the fact that it looked as if there was no satisfactory remedy just bringing suits.

The Court: And as a result of this conference you all came to the conclusion that the best place was to strike at the source, was it?

The Witness: To see if something couldn't be done in the Tariff Commission.

[fol. 1247] Q. Isn't it true, Mr. Stanford, that prior to Singer's representative, being Mr. Brumbaugh, as you described it, that Singer did have in mind the feasibility of proceeding before the Tariff Commission in one fashion or another?

A. Mr. Elkins, I don't recall that there was any discussion or anything in mind with reference to bringing an action on Gegauf No. 1 prior to the time of this discussion with Mr. Brumbaugh.

Q. Didn't you, Mr. Stanford, seek experts and confer with experts as to testimony that they might offer in behalf of Singer before the United States Tariff Commission?

A. I did not, no, sir.

Q. Do you know of any associates in the Patent Department that did confer with these experts, as we have described them?

A. The only expert that I recall that we conferred with—and it was not in reference to the Tariff Commission action; it was in reference to the civil action that we filed here in the United States, and there was an expert employed to go over that and give testimony in that case.

Now when that began I do not know. I am not prepared to [fol. 1248] say when that expert was consulted.

Q. Will you give us the name of the expert, please?

A. I couldn't do so at the moment, sir. I don't remember his name.

Q. Was there only one?

A. I think there was one——

The Court: What does this have to do with the case? I can't understand its relevance. If you have some good reason for it, and I rely upon your judgment, I will permit you to pursue this line of interrogation. But anybody, in a large corporation particularly, if it is going to institute a proceeding such as this, is going to go around and canvas its possibilities before they begin it.

Now what significance does it have?

Mr. Elkins: The only question here, your Honor, is when.

The Court: All right, ask him: When did you first consult counsel about the possibility or advisability of instituting these Tariff Commission proceedings? Let us come right down to it—if you know.

The Witness: When I first consulted counsel?

[fol. 1249] The Court: Yes. When did your company, to your knowledge, first consult anybody in a professional capacity about the advisability or the availability of these Tariff Commission proceedings?

The Witness: Why, the first that I can recall was in the latter part of May, 1958.

The Court: And who did you talk to about that?

The Witness: Mr. Brumbaugh.

The Court: Did he bring the matter up or did somebody from Singer bring it up, if you know?

The Witness: That would be difficult for me to say when a general discussion of the inadequacies of enforcing a patent came up—or whether Mr. Brumbaugh bought it up I do not know, I cannot say.

The Court: To your knowledge had Singer ever been involved in any proceedings like this before?

The Witness: In Tariff Commission proceedings Singer had not been involved, in a Tariff Commission proceeding.

The Court: All right.

Mr. Elkins: If your Honor please, during pre-trial we asked for such documents as would indicate the date upon which Singer first decided to go ahead and proceed, and there was a discussion there, and the court at the time, speak-

[fol. 1250] ing to defense counsel, said "Go ahead and give them such portion of that document that records that decision"—I believe meaning that even though it might be privileged as to some matter or another, at least there would be enough——

The Court: The point came up as to whether or not you were prying into a disclosure of counsel to his client, of Mr. Brumbaugh to his client that I was anxious to protect.

It was a question of privilege that lawyers fortunately enjoy—or clients enjoy with reference to lawyers.

You were given that date, weren't you? What was the date?

Mr. Elkins: Just by this testimony, your Honor.

Mr. Pettit: Your Honor, this is one of the things that sort of grows. They have every letter that would indicate it. They talked to Brumbaugh. They talked to Colburn. There is nothing that says "Until the action is brought"—"Now bring this action".

It is one of the things that you take up.

The Court: Are there any other letters to your knowledge, Mr. Pettit, in the files of Singer that refer to when this matter was first discussed which the government has not [fol. 1251] already had access to?

Mr. Pettit: The only thing that they do not have is a series of bills from Mr. Brumbaugh which, if he went through them, he would find the first mention of the Tariff Commission was on June 1, 1958.

The Court: That is the first bill from Mr. Brumbaugh by which that is discussed?

Mr. Pettit: That is the first bill.

The Court: That was for the month of May, was it?

Mr. Pettit: That was the June 1st bill for the month of May.

The Court: June 1st bill for the month of May.

Mr. Pettit: Every other letter that we have I think I can safely say they have, it has been turned over to them.

I know of no letter which indicates the time.

The Court: Maybe we can work this thing out if I were to ask Mr. Brumbaugh, through Mr. Pettit, this question: Does this diary show, and do you want to disclose the date when this was first discussed?

Mr. Pettit: Mr. Brumbaugh has his diary right here and would be very glad to answer the question.

[fol. 1252] The Court: We will take Mr. Brumbaugh's statement on this, won't we?

Mr. Elkins: Yes, absolutely, yes.

The Court: That is fine.

Mr. Brumbaugh: I do not have my diary but I made notes, anticipating this. This might be of interest.

The first diary entry I have is May 19, 1958, and my entry is: "Conference with Singer regarding Tariff Commission possibilities in respect of enforcing patent rights".

The next is May 20th, the following day, and my entry is "Conference with Joe Colburn regarding the matter".

Mr. Colburn is the customs counsel whose name has been mentioned.

My next entry is May 23rd—in other words, three days later.

The Court: Is this all 1958?

Mr. Brumbaugh: All 1958.

In other words, in one week's time all of this happened.

On May 23rd I had a further conference with Mr. Colburn regarding the same proceeding, or the possibility.

[fol. 1253] On the 26th of May, my diary entry was—is that I had a conference with Mr. Kircher and others of the Singer Company in the office of Mr. Kircher.

On the 27th of May my diary entry is studying—a study with respect to evidence to be produced or approved in the Tariff Commission proceeding.

The Court: I think that is enough.

We do not want to pry into your diary any further.

Mr. Elkins: If your Honor please, the point of our inquiry relative to documents is that the first document that we have from Singer that relates to the Tariff Commission proceeding is dated some time in July, 1958.

The Court: It takes time for lawyers to get working.

You know how long it takes the Antitrust Division to get on the job. It takes a little time to prepare papers, to look up the law, to check that up—that is quite likely.

Mr. Elkins: And the document in question does not, from its contents, appear to be—and indeed is not—a document that is an introductory document, that is, a document that [fol. 1254] reports that "We are proceeding". It reports that for some time——

The Court: I suggest you proceed with your interrogation, now that Mr. Brumbaugh has very kindly stated these facts.

Maybe we can have it stipulated that Mr. Brumbaugh's statement as a member of the bar, now given, may be considered evidence in this case, without the necessity of swearing him as a witness.

Do you so stipulate, Mr. Pettit?

Mr. Pettit: I will indeed.

The Court: And, Mr. Elkins, will you so stipulate?

Mr. Elkins: I will stipulate that if Attorney Brumbaugh were called, he would testify as he has spoken for the record, yes, sir.

By Mr. Elkins:

Q. Mr. Stanford, I direct your attention to Government's Exhibit No. 62 (handing witness), which, as you have testified, is a memorandum written by you concerning your negotiations with Mr. Gegauf in December, 1957. As stated earlier, there was discussed there the idea of Gegauf wanting to give some privilege under the patent to Vigorelli and to [fol. 1255] Pfaff. And that, as you agree, I believe, appeared in the final agreement of December 5, 1957, as written there?

A. Yes.

Q. Then you go on to say "In this way we avoided giving a license to a third party under the United States patents which we expect to obtain".

Am I right in understanding your testimony that you were there referring to Necchi?

A. He originally started out asking licenses for three people, and one of them was Necchi, and this refers to the "Necchi", the third party.

The Court: The "third party" is Necchi, was it?

The Witness: Or any "third party". I don't know why I did not use "Necchi" here.

Q. Would you be surprised, Mr. Stanford, to learn that of all of the documents here there are none that show Mr. Gegauf was interested or said anything about granting a license to Necchi?

Mr. Pettit: I object to that.

The Court: Objection sustained as to the form of the question.

Mr. Pettit: I do not know whether that is correct.

[fol. 1256] Q. Do you know of any documents that set forth that Mr. Gegauf was interested in reserving some rights for the benefit of Necchi?

A. There was—I am speaking now purely from——

The Court: That is a report of the Italian lawyer, isn't it?

The Witness: A letter from Mr. Kirker, I think, setting forth the demands that Mr. Gegauf is now making, if I am not mistaken. It includes the word.

The Court: Kirker is your Swiss attorney?

The Witness: Yes.

The Court: It is my recollection of that exhibit—let us locate that exhibit by number now.

Mr. Pettit: Government's Exhibit 52.

The Court: Government's Exhibit 52. Let us straighten this thing out right now. I do not like to leave things hanging in the air.

I have a distinct recollection of Necchi's name being mentioned in that Kirker letter.

Mr. Pettit. And Government's Exhibit 50.

The Court: Wait a minute—let's see.

(After examining) In Exhibit 52 I do not see Necchi's name.

Mr. Elkins: It is on page 2.

[fol. 1257] Mr. Pettit: Page 2, your Honor, the first full paragraph.

The Court: (After examining) Yes, I see it "Vigorelli, Necchi, Pfaff"—that is the one that I had in mind.

And you say it is also in 50?

Mr. Pettit: Yes, sir.

The Court: I will see.

(After examining) Yes, it is in the telegram. It says "Pfaff Vigorelli Necchi".

By Mr. Elkins:

Q. I believe, Mr. Stanford, that you stated this morning in relation to testimony concerning Government's Exhibit 50, to which we have just referred, that this was written by Mr. Waterman as a result of a telephone call he had received from Mr. Kirker.

A. That is my understanding, sir.

Q. So that what he is reporting in this Government's Exhibit 50 could be the same material as being reported by Mr. Kirker directly to you in Government's Exhibit No. 52?

Mr. Pettit: Well, I will object to that, your Honor.

The Court: It could be a lot of things.

[fol. 1258] Do you know whether it is the same?

Apparently you can fix it by the date.

The letter is dated the 25th of October.

The telegram is the 24th, and the natural inference is that as soon as Waterman finished talking to Kirker he sent off the cable. The next morning, when Kirker got back to his office in Geneva—where I think he had his office—he dictated the letter.

That is a natural inference, and I think it is a fair inference.

Q. Do you recall Mr. Gegauf saying that he wanted——

The Court: May I point out one thing more to you?

Mr. Elkins: Yes, your Honor.

The Court: Apparently Waterman had met Kirker at Frankfort-on-the-Mainz. He either met him there or had gone right from Geneva up to Frankfort, because you see Kirker's cablegram is from Frankfort and Stanford's reply, the same day, is addressed to Waterman at Frankfort. Apparently Kirker had gone up to Frankfort.

Mr. Elkins: It was a telephone call.

The Court: A telephone call. All right.

[fol. 1259] By Mr. Elkins:

Q. Inasmuch as Government's Exhibit 52, the letter written by Kirker, states, "Since in the meantime we had reported the situation by telephone to Mr. Waterman in Frankfurt," do you recall Mr. Gegauf saying that he was interested in reserving any interest under the Gegauf patents for the benefit of Necchi?

A. When I talked with him?

Q. Yes.

A. No, I don't recall that. Do you mean prior to this time?

Q. At any time, Mr. Stanford, do you recall Mr. Gegauf indicating or saying, expressly saying, that he wanted to reserve some interest in this patent for the benefit of Necchi?

A. I don't recall his actually saying that to me in person.

Q. Now referring to Government's Exhibit 62, which is the memorandum written by you, Mr. Stanford, this states:

"Throughout the entire negotiations I had tried to drive home the point that the Brother Pacesetter ma-

chine was a free-arm zigzag machine and that Singer did not have a comparable free-arm machine to sell. [fol. 1260] Consequently, the Brother Japanese machine was in direct competition with Bernina and not with Singer."

And now you go on here to say, the part to which I now direct your attention, sir:

"During the negotiations I continued to point out various ways that the competition in free-arm machines might be reduced as well as the competition in flat-bed machines and as a consequence Gegauf would be in a position to profit from this fact more than Singer."

And my question, Mr. Stanford, is: Will you tell us now what you enumerated for Mr. Gegauf as the various ways that the competition in free-arm machines might be reduced.

If you don't remember, you may say so, sir.

The Court: The suggestion is most helpful, but I think it ought to be omitted.

Q. Could you enumerate the various ways, if you recall them?

A. Various ways, to my knowledge, could only mean suits under the Gegauf patent. Had we owned it in the United States, we could enforce it. Of course, this was purely a [fols. 1261-1262] bargaining proposition. I was trying awfully hard to acquire a patent which we wanted to use here in the United States.

Q. Nonetheless, it is clear, is it not, that you pointed out to him various ways that the competition in the free-arm machine might be reduced?

A. That is what the memorandum says, yes.

Q. This is a memorandum, Mr. Stanford, that was written by you for the benefit of Mr. Kircher, the vice president of Singer, for Mr. Aurell, for Mr. Bruder, for Mr. Robbins, for Mr. Stewart, and for Mr. Waterman, all, I believe, of Singer; is that not so?

A. That's right.

* * * * * * *

[fol. 1263] Redirect Examination.

By Mr. Pettit:

Q. Mr. Stanford, what is the basic feature of the multiple-cam mechanism in the Singer 401 machine?

A. The basic feature is the plurality of rotary cams, stack of rotary cams carried on a common axis with a single cam follower which moves parallel to the axis of the shaft so that you can select any one of the cams for the purpose of controlling the needle bar.

Q. And is that a retractable cam follower?

A. Yes, that is a retractable cam follower. It can be moved back from the cams and then over to another cam.

Q. Each one of the elements you described there, is that set forth in Claim 1 of the Gegauf patent?

A. The retractable feature?

Q. Each of the features.

A. Each of them, yes.

Q. Why do you consider that the basic feature of the 401 mechanism?

A. That is the very heart of the mechanism. That is an essential part of it. It is absolutely necessary that that be in the machine. You must be able to select the cams to give [fol. 1264] you the patterns. And, if you have two followers, why, the second follower is not necessary; you can still use just one follower.

Q. The machine can operate and does operate on a stack of cams and a single follower?

A. Yes.

Q. And the second follower can be immobilized.

A. That's correct, sir.

Q. Is this feature we have been talking about, which we have just defined, covered by the Johnson patent?

A. Selecting a single cam is not.

Q. Could you use the Johnson patent to prohibit anyone from using such feature in a sewing machine?

A. No.

Q. Could you use the Gegauf patent to prohibit anyone from using such feature in a sewing machine?

A. Gegauf No. 1?

Q. Could you use Gegauf No. 2?

A. No.

Q. Could you use the Harris patent to prohibit anyone from using such feature in a sewing machine?

A. No.

Q. Is there a patent that can exclude the use of such feature?

[fol. 1265] A. Gegauf No. 1.

Q. Is there any other patent that can exclude the use of such feature?

A. No. That is the patent that covers the selection of a single cam.

Q. Mr. Stanford, what is the basic feature of a multiple-cam mechanism in the Singer 319 machine?

A. Well, that has a plurality or stack of cams which are mounted on a common shaft, and there is a follower for each cam on the stack.

Q. Why do you consider that the basic feature of that mechanism?

A. Well, that is an essential that you must be able to select a cam from a stack.

Q. It can operate on one without using the second?

A. Yes, it can.

Q. The machine can operate using one follower without using any other?

A. Yes, just a single follower. Then you have one follower for each cam.

Q. Is this feature covered by the Perla patent?

A. No.

Q. Could you, by the use of the Perla patent, prohibit anyone from using such feature in a sewing machine?

[fol. 1266] A. No.

Q. Is there a patent that could exclude the use of such feature?

A. Will you repeat that, sir.

Q. Is there a patent that could exclude the use of such feature?

A. Yes.

Q. What patent is that?

A. That would be the Gegauf No. 2.

Q. And is there any other patent that could exclude the use of such feature?

A. Not as stated.

Q. Does the 319 have certain ancillary features?

A. Yes, it does.

Q. Would you name them, please.

A. That is the ability to select two cams simultaneously or more than two cams simultaneously.

Q. That is one of them. What about individual handles for shifting the follower?

A. That is another feature, that you have an individual means for activating each cam follower.

Q. Are either or both of these ancillary features dominated by any patent other than the Perla patent?

[fol. 1267] A. The Johnson patent covers the idea of sensing two cams simultaneously.

Q. And?

A. The Perla patent covers the idea of sensing more or selecting more than two.

Q. And which patent dominates the separate handles for each follower?

A. The Perla patent.

Q. The Perla patent for separate handles for each follower?

A. Yes. That has a special handle for each follower.

Q. Can the Harris patent be used to exclude the machine disclosed in the Gegauf No. 1 patent?

A. I beg your pardon, sir?

Q. I am asking now about the Harris patent and ask whether that can be used to exclude the machine disclosed in the Gegauf No. 1 patent.

A. No. The Harris patent cannot be used for that purpose.

Q. Can it be used to exclude the machine disclosed in the Johnson patent or, in other words, a machine constructed as the Singer 401 machine?

A. No.

[fol. 1268] Q. What machine can the Harris patent exclude?

A. A machine which has all the features covered by the Gegauf No. 1 patent plus the additional subject matter set out in the three claims obtained in the reissue. That is, this would be 5, 6, and 7, as I recall.

Q. Do I understand you to mean by that that this patent calls for all of the elements in Gegauf No. 1 plus the elements set forth in either Claim 5, 6 or 7?

A. Yes, that is true.

Q. And if a machine violating that patent removed the mechanism that is described or covered by Claim 5, 6 or 7, could the Harris be then used to exclude that machine?

A. You mean if they removed those features covered by 5, 6 and 7? If they remove those, why, it would not cover that machine.

Mr. Elkins: May I ask, please, that that question and answer be read.

(Record read.)

Q. Mr. Stanford, do you know the difference between Claim 19 that was in the Harris Reissue application and Claim 22 of that application?

A. I think I recall the difference, yes.

[fol. 1269] Q. What was the difference between Claim 19 and Claim 22?

A. Well, first, it was the retractable—Claim 22 had a retractable follower so that it could be moved from one cam to the other, and that was under the influence of the operator, and then it called for something extending from the outside of the machine so that it could be moved.

Q. So that the fundamental difference is the retracability of the follower and a means of having——

A. And a means for locking it after you have selected your cam. In other words, you pull it back, move it over to a new cam, and it is latched in that particular position.

Q. Was it your opinion that claim 19 was proper and valid as written?

A. We always considered that that was a valid claim.

Q. And do you still consider that that would be a valid claim?

A. We do.

Q. With respect to the Messerschmitt machine and the Perla patent, I would like to know whether, upon the issuance of a patent under Gegauf application No. 2, if that had [fol. 1270] been retained by Mr. Gegauf, could that patent have excluded the Messerschmitt machine in the United States.

A. Yes; the Messerschmitt machine would have been an infringement of that patent.

Q. And a license under the Perla patent, would that have permitted a sale in the face of the Gegauf patent?

A. No, it would have been an infringement of the Gegauf No. 2 patent.

Mr. Pettit: Your Honor, I think that would be all, except I would like to just end by introducing in evidence one document.

Q. Did you write this memorandum, note or letter, Mr. Stanford (handing)?

A. Yes. I see that I misspelled a word.

Mr. Pettit: I offer this document in evidence.

Mr. Elkins: No objection, your Honor.

The Court: Received in evidence.

(Received in evidence as Defendant's Exhibit 138.)

Mr. Pettit: Your Honor, I would like to note for the record that Claims 5, 6 and 7 to which we have just referred are set forth in detail in Paragraphs 28 and 29 of the Statement [fol. 1271] of Facts.

The Court: Yes.

* * * * * * *

[fol. 1272] Afternoon Session

2:30 P.M.

JOEL G. STANFORD resumed.

Recross examination.

By Mr. Elkins:

Q. Mr. Stanford, that claim 19 of the Harris Reissue patent which was suggested for interference was suggested for that purpose, was it not, according to Government's Exhibit 175, page 95?

A. Yes, it was.

Q. It was suggested on January 16, 1956?

A. Yes.

Q. And on February 16, 1956, Gegauf made that claim 19 for Harris Reissue for the purposes of interference?

A. He did.

Q. Now, Mr. Stanford, if I could please direct your attention to Government's Exhibit 173, pages 54-55, on April 27, 1956, the Patent Office rejected that claim 19 in the Harris Reissue because of prior art, did it not?

A. Yes, it rejected it on the Miller patent.

Q. And thereafter, as I understand it, claim 22 of the Harris Reissue became a subject of the interference?

A. That is correct.

[fol. 1273] Mr. Elkins: I have no further questions.

Mr. Pettit: That is all.

The Court: Thank you, Mr. Stanford.

(Witness excused.)

* * * * * * *

OPENING STATEMENT OF ALLEN T. KLOTS

Mr. Klots: If your Honor please, may I just say a word with regard to the evidence which we now propose to produce, and that is this: the purpose of this evidence is to endeavor to put into true perspective and true light the trade and commerce which the defendant Singer is accused here of conspiring to restrain and to monopolize, and to attempt to monopolize.

The government has undertaken to define this trade and commerce as trade and commerce in machines that carry a built-in device, built-in multi-cam device for making zigzag stitches.

We propose to show the Court that such a definition implies a totally artificial market that has no relation to the economic facts and has no relation to the legal requirements of the situation.

In other words, the government has arbitrarily, simply to show for the purpose of this case, put machines with built-in multi-cam devices for making zigzag stitches in an [fol. 1274] airtight compartment, and they say that the market is limited to that airtight compartment.

It assumes, if you will, that there is a group—a select

group, if you will, of housewives who must have a machine with a built-in multi-cam device and who are in the market for no other type of machine with devices that make zigzag stitches in other ways. Indeed, they seem to say that these ladies are in the market only for machines that violate the Gegauf patent.

[fol. 1275] Now, merely to state this position, if the court please, seems to us to indicate its unreality, and the testimony which we will produce will show this even more clearly.

What the housewife wants essentially is a sewing machine that will sew. If she wants to make zigzag stitches, she has innumerable choices of machines that do it, with a variety of devices and a variety of ways of doing it.

We have already shown the court that machines with built-in cam devices are being built which do not infringe the Gegauf patent, over which Singer, therefore, has no control whatsoever, which are being imported from Japan and elsewhere. We have put in evidence already, Mr. Pettit did, Exhibits 112, 113 and 114 which are that type of machine with built-in multi-cam devices for making zigzag stitches. These are available for any housewife. These show not only competition in this very type of device for making zigzag stitches but they show how easy it is to build around the Gegauf patent and, in fact, how narrow the coverage of the patent actually is.

We propose to go much further and show the court the stitches and patterns made by machines with replaceable [fol. 1276] cam devices, with manually-operated devices, and by so-called straight stitch machines equipped with the attachment that enables the straight stitch machine to make it, and we will show you that the Singer company actually sells these devices, these attachment devices, for making zigzag stitches as standard equipment with their straight stitch 404 machine.

We will also show you, if the court please, that at whatever price level the housewife finds it necessary or desirable to shop in, whatever price level she finds herself in, all types of machines are available to her in that particular price level, whether they be machines with the built-in device or with the replaceable cam device or with the manual device or the straight stitch with the zigzag attachment device.

If the court please, sewing machines, like many other

products, carry many different features. They are complicated and ingenious mechanisms, as I am sure you have already been able to observe. They come with many different devices for doing different things or different devices for doing the same thing. They come with devices calculated to attract the customer. The fact that they do differ in all these features is the very essence of competition. That is [fol. 1277] why manufacturers think up devices, so that they may compete more effectively with other manufacturers.

It may be that the difference in feature enables them to perform more easily or efficiently in one respect or another. It may be that one has a different feature which makes it peculiarly susceptible to selling talk, good selling talk, but that doesn't put each product produced by a different manufacturer with his own choice of features in a different market. The Supreme Court, of course, in the Cellophane case has put the quietus on any such contention when it said, and I quote, "But where there are market alternatives that buyers may readily use for their purposes, illegal monopoly does not exist merely because the product said to be monopolized differs from others. If it were not so, only physically identical products would be part of the market."

I believe, if your Honor please, that we will be able to show you that if feature films are in the same television market as live shows, shorts and cartoons, as your Honor and Judge Herlands both thought in the Columbia Pictures Universal case, then a fortiori sewing machines that make zigzag stitches, whatever the device used, are in the same market and it is a highly competitive market at that.

[fol. 1278] Now, sir, I will call my first witness, and the first thing we want to show you is what a zigzag stitch looks like and the different machines that make them.

OBJECTION OF GOVERNMENT AND RULING THEREON

Mr. Weinstein: Your Honor, we would like to interpose a general objection at this point. The defendant acknowledges that the point they have reached in their case is what they call the relevant market case. I think it is clear from the pretrials and what we have said to date that the government does not believe the issue of relevant market as discussed in the Cellophane case is in any way relevant to the issues

of this case. We believe that any evidence which tends to show that one product is a competitive substitute for another only obscures the issue as to whether or not an agreement was entered into in 1956 and carried out to combine patents in the hands of Singer for the purpose of excluding multiple-cam zigzag machines of Japanese origin..

We further believe that in so far as we charge an attempt to monopolize in this case, that if the government is successful in proving the specific intent necessary on the part of Singer to exclude these machines, that any question of relevant market is, again, immaterial to the issues. And [fol. 1279] the very case that Mr. Klots cites, the Cellophane case, specifically noted in a footnote, Footnote 23, that that case was distinguishable from cases involving an attempt to monopolize or a conspiracy to monopolize or a conspiracy to restrain trade in that in those cases relevant market is not an issue in the case.

We want to make it clear——

The Court: To take your last point first, one of your counts is a count of attempt to monopolize. An attempt, according to my understanding of the law, is a series of acts or an act which, if not interrupted, if carried to its consummation, would result in the completed act. In other words, if you charge somebody with attempted robbery, if the acts continued there would have been a robbery.

But here you have a situation which, according to defendant, is one in which nothing that they did or attempted to do could in any way constitute a monopoly, and therefore they cannot be charged with a monopoly.

You have talked a lot in terms which are related to the criminal law in this case, particularly those comments coming from the government. The only exception that I know to this general rule is on the crime of attempted abortion or [fol. 1280] matters of that type.

I am going to take this, and I am going to take it also on the charge that there was a conspiracy to restrain, because until we know what was attempted to be restrained, we cannot find out whether or not there was a restraint and we cannot ascertain whether there was a restraint in fact or in law.

Your exception is noted upon the record, and I am going to take this evidence as to what has been described as rele-

vant market, and you may have a general exception, something which I ordinarily do not grant but which I will grant to you.

Mr. Weinstein: Thank you very much, your Honor.

[fol. 1281] JESSIE HUTTON, called as a witness in behalf of the defendant, having been first duly sworn, testified as follows:

Direct examination.

By Mr. Klots:

Q. Miss Hutton, will you give your address—did you give your address?

A. No, I did not.

Q. Would you give that, please?

A. I live at 70 Harbor Lane, Massapequa Park, Long Island, New York.

Q. And you hold a position with the Singer Sewing Machine Company?

A. I am educational director.

Q. And how long have you been the educational director?

A. Since April 1, 1956.

Q. How long have you been with the Singer Company?

A. I will finish my 25th year about the middle of June.

Q. And what was your first job with the Singer Sewing Machine Company?

A. I started as a sales woman teacher while still in school.

[fol. 1282] Q. And what school was that?

A. I was attending the University of Dubuque in Dubuque, Iowa.

Q. And did you graduate from the University of Dubuque?

A. The first year with Singer I worked 30 hours a week which enabled me to carry a full—my full senior year course. I graduated in 1937 with a Bachelor of Arts degree.

Q. Now when you say you were a part-time teacher for Singer, what were you teaching and whom were you teaching?

A. I was a sales woman at the time. At that time we gave a seven-lesson course in sewing with the purchase of each sewing machine.

Q. To the customer?

A. To the customer, yes.

Q. And you were teaching the customers or the teachers or both?

A. I was teaching customers when I began.

Q. Yes. Then after working in Dubuque where did you next go?

A. I worked in the Dubuque, Iowa, shop as sales woman [fol. 1283] teacher until 1939.

In September I was transferred to the Duluth, Minnesota, shop, which was an enlarged shop and then it required an enlarged staff. Again I was sales woman teacher.

Q. And from Duluth where did you go and when?

A. The end of 1939 I was transferred to the St. Paul central agency officer as an assistant educational supervisor, which meant that I traveled the mid-west area covering 52 Singer shops.

Q. And then did you shortly become educational supervisor?

A. About a year or a year and two months later I became educational supervisor and remained there until 1945, November.

Q. Yes, and then where did you go?

A. I was transferred to the executive offices in New York as a field staff member of the educational department.

Q. And did that involve traveling about the United States?

A. In that capacity I traveled throughout the United States and Canada carrying the educational program.

Q. And how long did you continue in that capacity?

[fol. 1284] A. Until about 1954, I believe it was.

Q. And then what did you become?

A. I became assistant educational director.

Q. And then in April, 1956?

A. In April, 1956, I became educational director.

Q. Now what are your duties as educational director of the Singer Sewing Machine Company?

A. The educational department covers many facets, and I am responsible for the direction of the program.

We have aproximately—we have exactly 19 people employed in the educational department at this office, at the executive office.

Q. Here in New York?

A. Yes.

Q. Yes?

A. We supervise indirectly a staff of educational supervisors who are employed at our central agency points throughout the United States and Canada. That number varies slightly from time to time, some 75 to 80 girls who in turn are supervising their shop areas.

Q. Yes?

A. There are several facets, important facets to educational work.

Consumer education is one; employee training is [fol. 1285] another; providing sewing information for editors, publicity work, the source of sewing knowledge, sewing books and that kind of thing.

Q. Do you prepare instruction books for sewing?

A. Yes, a facet of our work is the composition of the instruction book. Of course the work related to product development and experimentation and product testing.

Q. You are consulted in the matter of product development, are you, by the other officials of the Singer Company?

A. That is a very important facet of our work because in order to determine what the device will be used for, the extent of customer usage, the extent of need, how the mechanical will be applied as a home sewing item—after all, its a woman's product, and it is women who use sewing machines, therefore it is women who determine how other women will react to them.

Q. And what they want.

A. Yes.

Q. In your present job do you travel about——

A. Yes, I do.

Q. —or are you right here in the City of New York?

[fol. 1286] A. Yes, I travel, at times.

Q. What kind of traveling do you do? Where do you go?

A. Of course not as extensively as when I was on the traveling staff and traveling some 48 weeks out of 52.

My traveling assignments now, I always attend the conventions of the American Home Economics Association,

spending a great deal of time in our own booth and spending a great deal of time mixing among educators.

I travel for educational supervisors' meetings—the most recent was last November, we had a meeting for our Canadian educational supervisors' staff, at which time we reviewed the total picture of educational work in Canada, employee training and consumer reaction and product information—the general type of educational work.

Q. You may have already answered it, but does your job in any way ascertain customer requirements?

A. Oh, yes.

Q. Are you familiar with the Singer machines, the machines that the Singer Company makes which make zigzag stitches as well as straight stitches?

[fol. 1287] A. Yes.

Q. One of these machines is the so-called 401 machine, is it not?

A. Yes.

Mr. Klots: That is in evidence, your Honor, as Exhibit 106, and I think you are already fairly familiar with it so I won't have to show that any more intimately.

Q. Now there is a machine in evidence, Exhibit 116, known as the 403. That is the machine with the replaceable cams, is it not?

A. Yes.

Mr. Klots: I do not think we have offered, however, your Honor—well, I will withdraw that.

Q. Does there come with that machine a box of replaceable cams?

A. Yes.

Q. I would like to show you this; and I will ask you if this box, which I show you, and its contents, come as standard equipment with the 403 machine (handing witness)?

A. Yes.

Mr. Klots: I offer it in evidence.

I do not think it is necessary to offer the instruction book [fol. 1288] which is in the box. Otherwise I offer the box and its contents.

The Court: Why don't you leave the instruction book in, in case I want to look at it?

(Laughter)

Mr. Klots: I will be delighted, your Honor.
The Court: Any objection?
Mr. Weinstein: No objection.

(Marked Defendant's Exhibit 139.)

The Court: Is this box of attachments that has just been marked in evidence standard equipment or extra?
The Witness: It is standard.
The Court: Standard.
The Witness: Yes, 8.
The Court: It goes with the machine?
The Witness: Yes.
The Court: All right.

By Mr. Klots:

Q. Miss Hutton, I noticed these black discs in this exhibit —they are the cams, are they not?
A. Yes.
Q. And there are eight in this box?
A. There are eight.
[fol. 1289] Q. And there is also one that comes attached to the machine?
A. Yes.
Q. That is removable but it is in the machine?
A. Yes.
Q. Now I notice on each of these discs there is a little, sort of a design (indicating).
What is that design on each of these discs?
A. That indicates the stitch pattern that is produced when this cam is inserted in the machine.
Q. So if you want to make that particular stitch pattern you just pick out the cam that has a picture of the design on it?
A. Right.
Q. What are these other gadgets in this box besides these cams?
A. These are what we term the regular attachments and accessories for the machine which—shall I name them?
Q. Yes, just name some of them.
A. Obviously that is the large screwdriver (indicating).
This is a straight stitch throat plate, which has a narrow opening.

[fol. 1290] A lint brush (indicating).

Q. Just a minute. This throat plate, we will hear more about it later—this goes under the needle, does it not?

A. Yes.

Q. And when the needle zigzags, you have to have a little different type than a straight stitch throat plate?

A. Well, this is a straight stitch throat plate which has a small round opening.

The Court: You ought to have a tag put on that and mark it—mark it Exhibit 139-A.

(Marked Defendant's Exhibit 139-A.)

The Court: That is the gadget that goes down.

The Witness: Yes—the feed dog rises up through slots and the needle goes down through the little round slot.

By Mr. Klots:

Q. What other gadgets are there?

Mr. Klots: I do not know that we have to mark the screwdriver.

The Court: No.

A. This is a seam guide.

Mr. Klots: I do not think we have to mark that separately [fol. 1291] either.

The Court: No.

A. (Continuing) A straight stitch presser foot.

The Court: To keep the material down on the machine?

The Witness: Yes.

A (Continuing) A hinged adjustable zipper foot.

Q. Whatever that means—that means when you put on zippers, is it?

A. Yes.

Q. Is that when you are sewing on zippers?

A. They use it for sewing zippers. It is used for making corded welting, corded button holes.

Foot hemmer. It makes a small narrow hem.

This is called a special purpose foot.

Q. What does that do?

A. Well, we have one called a general purpose foot. This

does almost everything else. This is primarily for buttonholing, for applique.

Q. You use that in connection with buttonholing?

A. Yes.

Q. You use a zigzag stitch when you make buttonholes?

[fol. 1292] A. Yes.

Q. I see.

A. This is a button sewing foot.

Q. What is a button sewing foot—for sewing a button on?

A. Yes.

Q. You have to have an attachment for that?

A. Yes.

Q. What is this gadget?

A. This is a ruffler. This is very famaliar to the home sewer.

Q. Very familiar to the home sewer. You mean they like to make ruffles on their dresses?

A. They have seen that type of attachment for many years.

Mr. Klots: Let us mark the ruffler.

(Marked Defendant's Exhibit 139-B.)

A. This is a bias binder.

Mr. Klots: Let us mark that.

(Marked Defendant's Exhibit 139-C.)

By Mr. Klots:

Q. What are these (indicating)?

A. These are bobbins and needles.

[fol. 1293] Mr. Klots: All right, I think that completes the gadgets that are in this box.

I thought we might as well go through them while they are before us.

By Mr. Klots:

Q. Now, Miss Hutton, I show you a cardboard box with a lot of little cardboard boxes in it.

What are in these little cardboard boxes?

A. These are the cams that may be purchased separately for the 403 and 401 machine.

Q. And they may also be used on the 401 machine?
A. Yes.
Q. That is the extra cam on top of the 401 machine?
A. Yes.
Q. In other words, these are additional to the ones in Exhibit 139 which come as standard equipment?
A. Right.

The Court: How many altogether are there of these extra cams and attachments?
The Witness: There are 12 extras.
The Court: 12?
The Witness: Yes.
The Court: All right, and then you——
The Witness: 12 and 9 are 22.
[fol. 1294] Mr. Klots: Well, there is one on the machine.
The Witness: Yes, there is one on the machine. So there are 13 extras.
There are 8 in here, 1 on the machine is 9, and they total 22.

Q. Do each of these have a little picture——
A. Yes.
Q. —of the pattern on the cam?
A. Yes.
Q. And on the box, too?
A. Yes.

Mr. Klots: I would like to offer these in evidence.

(Marked Defendant's Exhibit 140 in evidence.)

Mr. Klots: I would like to offer in evidence, your Honor, another machine that has not actually been offered but is very important in this picture, and that is the Singer 404 machine. It is one of these right here (indicating).

By Mr. Klots:

Q. I show you this machine and ask you what that machine is—what is it known as? I mean, what is the number of the machine (indicating).
[fol. 1295] A. Oh, this is a 404, the first of the slant needle series.

The Court: The first of the what?
The Witness: Slant needle series.

Mr. Klots: Your Honor will notice the needle on this is slanted, and that is true of the exhibits we have already put in—the 401, the 403 and the 404. This needle does not come out straight but it is slanted.

I will ask her more about that.

I offer it in evidence.

Mr. Weinstein: Your Honor, we object. This machine is not even a zigzag machine. It is a straight stitch machine and does not fall within the class of zigzag machines.

The Court: I do not know what it is yet. I have seen so many machines one more won't hurt.

Objection overruled. Let's find out. If it is not material I won't pay any attention to it.

(Marked Defendant's Exhibit 141 in evidence.)

[fol. 1296] By Mr. Klots:

Q. This is known as a straight stitch machine, but what is this red box that I see alongside of it?

A. This is part of something else.

Mr. Klots: I withdraw the red box. It doesn't go with this machine.

Q. I ask you instead what is this box that I find here near this machine?

A. This is the zigzag attachment that is sold as part of the equipment with the 404 machine.

Q. Is that sold as standard equipment?

A. Yes.

Q. And does it make zigzag stitches?

A. Yes, it does.

Mr. Klots: I offer that in evidence.

The Court: We will mark it as A.

(Received in evidence as Defendant's Exhibit 141A.)

The Court: So that you can convert the straight stitch into a zigzag by putting on this attachment?

The Witness: Right.

The Court: Where does this attachment go? As you put this on the machine, tell us what you do with it.

[fol. 1297] The Witness: I am removing the presser foot.

The Court: That is the gadget that presses against the material before it goes through the needle?

The Witness: Right. I merely bring the attachment on from the back (indicating).

The Court: And press the foot forward.

The Witness: And there is a separate thumbscrew here (indicating).

The Court: I see. You screw that on where you took the presser foot off.

The Witness: That's right.

The Court: So that the black part is away from the operator and the presser foot is to the operator.

The Witness: Right. I can't get the hole, but that's where it goes.

The Court: You would get more practice if you were out in the field, I guess.

The Witness: You bet.

Mr. Klots: I am doing it without any difficulty.

By Mr. Klots:

Q. Just for our education, Miss Hutton, tell us what does this zigzag attachment do.

Would you mind if I lead a little bit?

This attachment zigzags the material instead of zigzag-[fol. 1298] ing the needle; is that right?

A. That is the fabric-shifting device.

Mr. Klots: It shifts the fabric.

The Court: The fabric goes back and forth and moves around, and that is done by this foot moving (indicating)?

The Witness: Yes.

The Court: And the needle remains stationary.

(The witness operates the machine.)

The Court: The foot moves.

The Witness: The feed of the machine is moving the material away from the operator.

Q. Now, Miss Hutton, does that zigzag attachment also contain replaceable cams?

A. Yes. The cam is removed here (indicating). There are four replaceables with the set.

Q. Four cams that come with the set, and each of those has a picture of the zigzag stitch.

The Court: Instead of moving the needle laterally, the material is moved laterally.

The Witness: The fabric is shifted.
The Court: As well as pulled through.
The Witness: Yes, two motions.
The Court: But one motion is on the machine-carried cam. [fol. 1299] It would be applied to the needle. By this gadget it is applied to the material, the lateral movement.
The Witness: Correct.
The Court: All right.

Q. Besides these four cams that are part of this box that carries Defendant's Exhibit A141, the zigzag attachment, are there other cams that Singer has available to make different types of zigzag stitches?
A. There are 12 additional.
Q. Twelve additional.
And I show you the three boxes, each of which appears to have four cams in it, and ask you if these are the additional cams.
A. Yes.

Mr. Klots: I offer these in evidence.
Mr. Weinstein: No objection.
Mr. Klots: As one exhibit.
The Court: Mark that with a B.

(Received in evidence as Defendant's Exhibit 141B.)

Q. Each of these, the 403, the 401, and the 404 are sold with a certain number of cams.
Can you tell us whether or not it is possible to make al- [fol. 1300] most an unlimited number of cams to make different patterns?

Mr. Weinstein: Objection, your Honor. I don't know that this witness is qualified to testify to what I believe it an engineering matter, if I understand the question correctly.
The Court: Yes. Objection sustained.
Mr. Klots: All right. We will have another witness for that.

Q. Singer also makes a machine known as the 206 machine, does it not, which I believe is in evidence as Defendant's Exhibit 105?

The Court: I would like to go back for just a moment. I have something in my mind and I would like to get it off.

On this last machine we had here, the straight stitch machine, can you use this on any material irrespective of its thickness or must it be used exclusively on a fine or thin material?

The Witness: Well, your Honor, all family machines have some limit as to capacity.

The Court: No, no. This machine that we are talking about. This machine that we have just marked in evidence as Defendant's Exhibit 141, is the capacity of that [fol. 1301] machine limited to materials of thin quality?

The Witness: Not necessarily.

The Court: In thickness. Can you use it, for instance, on woolen material as heavy as you could use on the 401 machine?

The Witness: In my opinion, yes.

Q. I mentioned Defendant's Exhibit 105, which is the 206 machine. That machine I think Mr. Pettit has already described as a manually-operated device for making zigzag patterns, is that right?

A. Yes.

Q. Does that have a built-in cam also that makes the standard zigzag?

A. Yes, yes.

Q. So that without touching those levers, it will make a zigzag stitch of a certain definite pattern, is that right?

The Court: You will have to put one of the cams in gear, won't you?

The Witness: You must engage the lever. I mean, at a zero point it is straight stitch. When the lever is moved off zero toward 5 it makes a zigzag stitch. Five is the greatest width, and each degree under 5 is a lesser width of zigzag.

[fol. 1302] Q. So that without touching the lever at all after you have once set it, it will make a zigzag stitch?

A. That's right.

Q. But if you want to vary the zigzag stitch as it goes along, you have to work the levers?

A. Yes.

Q. And that is why it is called a manual machine?

A. Right.

The Court: Suppose we take a five-minute recess.

(A short recess.)

By Mr. Klots:

Q. Miss Hutton, have you operated any of these various types of machines yourself?

A. Yes, I have operated all of them.

Q. Is there a type of zigzag stitch sometimes described as a functional zigzag stitch and another type described as an ornamental or decorative type?

A. Yes. Many zigzag stitches are used functionally and therefore can be described as a functional stitch.

Q. Yes?

A. The basic zigzag stitch is a functional stitch.

Q. And then there are other types that are used purely [fol. 1303] for ornamentation?

A. That's right.

Q. Can one make a straight stitch and a functional zigzag stitch and an ornamental zigzag stitch on all of these different machines that you have mentioned this afternoon? That is to say, the 401, the 403, the 404 and the 206, which is the manual machine?

A. Yes.

Q. Have you at my request caused to be made a dress on which all of these different stitches have been made by each of four different machines employing different zigzag devices?

A. Yes.

Q. I show you this garment and ask you if this is the dress in question.

A. Yes, it is.

Q. Was that dress made under your supervision?

A. Yes.

Q. Did you actually observe the stitching as it was being made on it?

A. Yes.

Q. And the machines that were making them?

A. Yes.

Mr. Klots: I offer it in evidence.

[fol. 1304] Mr. Weinstein: No objection.

The Court: Received in evidence.

(Received in evidence as Defendant's Exhibit 142.)

The Court: Let me see the material.

A cotton twill. It is a good $27 retailer, marked down, though.

Q. Miss Hutton, will you first point out to the court what machines made the straight stitching on this dress and what machines made the zigzag stitches.

A. Obviously all the construction seams are made with straight stitching. Since the straight stitching appears the same to the eye, we labeled them so there would be no confusion.

The Court: All seams are straight stitched. What about the hem there?

The Witness: Yes. The hem is finished with the zigzag stitching. However, the hem is hand-stitched in place because this is a high-priced dress.

Q. But the zigzag stitching used on the hem is what you would call functional?

A. Yes, sir, that is used functionally.

Q. And have you labeled with the numbers 401 and 404 and manual exactly——

[fol. 1305] A. Yes.

The Court: I have looked at that.

A. (continuing) The 404, which is the straight stitch machine and the zigzag attachment, was used to finish this with zigzag stitching. The 403 was used on this side.

The Court: You have put these little white labels on to indicate the type of stitching.

The Witness: The machine with which it was stitched, yes.

Q. Now Miss Hutton, I see on the front of this garment, this expensive garment, what looks like decorative patches.

The Court: Applique.

Q. On each pocket.

A. Yes. These are applied pocket flaps, purely for decoration.

Q. And these little—what look like patches——

A. These are applique. The patches are applique for color mass and for design interest.

Q. The Judge was right when he said they were applique.
A. Yes.

Q. These appliques, there is a yellow patch and a white [fol. 1306] patch and a green patch on each pocket. Was a zigzag stitch used in any way?

A. That is a basic zigzag stitch set for a narrow bight, and the stitch length was made close together to make it a very secure applique.

Q. And the decorative border on each of these pockets was also made with zigzag stitching?

A. Yes. That is a purely decorative zigzag stitch. The narrow yellow and white line, of course, is the same stitch that was used to applique except used in a different way.

Q. Tell us which machines made each of those respective pockets.

A. Well, it is very hard to distinguish between them also, so we have labeled them. The 403 machine, which is a replaceable cam machine, was used for this one (indicating).

Q. That is the one over the left breast.
A. Yes.

The Court: On the jacket.
The Witness: On the jacket, yes.

A. (continuing) The 401 machine, the built-in cams machine, was used for this one (indicating).

Q. That is over the right breast.

[fol. 1307] A. Yes. The right hip pocket was made on the manual zigzag machine. The left hip pocket was made on the zigzag attachment on the 404 machine.

Q. Were any of these buttonholes made on these machines?

A. The buttonholes were made on the 401 machine, and these are a corded buttonhole. They employ the use of that hinged, adjustable zipper foot which is also used for cording and straight stitching. They could have been made on any of the machines.

Q. They could have been made on any of the machines.
A. Yes.

The Court: That is about a size 12, is it, or size 14?
The Witness: Twelve.

Q. Have you also at my request made under your supervision samples of stitches, zigzag stitches, that may be made on the different types of machines that we have been talking about?

A. Yes.

Q. I show you, for instance, one sample here which is labeled 401. What machine was that made on?

A. That is the machine with the built-in cams.

Q. The 401 machine?

[fol. 1308] A. The 401.

Mr. Klots: I would like to offer that in evidence.

The Court: Why not put that with the 401 machine as another letter so we will have with each machine the attachment and the sample of its productive work. That would be the better way, and thus we won't have any trouble with it.

Mr. Weinstein: May we inquire, your Honor, whether these stitches were made under the supervision or by Miss Hutton?

The Witness: They were not made by me. They were made in the Educational Department under my observation and supervision.

Mr. Weinstein: Did you actually observe these?

The Witness: Yes, of course.

Mr. Weinstein: No objection.

(Received in evidence as Defendant's Exhibit 106C.)

Q. Those are samples of the patterns that can be made on the 401 machine?

A. Right.

Mr. Klots: By the way, your Honor. I don't know if you ever heard this word. I didn't until yesterday. They call [fol. 1309] these swatches. Did you ever hear that expression?

The Court: Yes, sir, I did.

Mr. Klots: Then you won't be baffled if we call them swatches from now on.

Q. I show you this swatch which is numbered 403 and ask you what machine made those patterns.

A. The replaceable cam machine, or the 403.

Mr. Klots: I offer that in evidence.

Mr. Weinstein: No objection, your Honor.

(Received in evidence as Defendant's Exhibit 116C.)

Q. Now I show you another swatch which has the number 404 on it. It says "404 with zigzag attachment." What machine made those zigzag patterns?

A. The 404 machine, which is a straight stitch machine equipped with the automatic zigzag attachment.

Mr. Klots: I offer that in evidence.

Mr. Weinstein: No objection.

(Received in evidence as Defendant's Exhibit 141C.)

The Court: I see that this zigzag machine, the 404, doesn't produce this close stitching that you have on the 401 or the 403. Could you produce similar stitching, for instance, as [fol. 1310] shown on the first or the second line and the fifth line on the 404 as was produced on the 401 and 403?

The Witness: Your Honor, the difference lies in——

The Court: No. Please answer my question.

The Witness: I am sorry.

Mr. Klots: She may not be able to answer yes or no.

The Court: I think she should answer yes or no.

Can you produce with the 404 this type of zigzag shown on the second line of the 401 and 403, the close proximity of the stitching?

Do you know what I mean?

The Witness: We cannot produce as dense a stitch, your Honor, with the same dimension.

The Court: That's right.

[fol. 1311] Q. I show you another swatch which has the description on it "Pfaff 259" and I ask you on what type of machine those stitches were made.

A. On the Pfaff 259 manual machine.

Q. It is a manually-operated machine?

A. Yes.

Mr. Klots: I offer it in evidence.

Mr. Weinstein: No objection.

(Received in evidence as Defendant's Exhibit 143.)

Q. Miss Hutton, I have some more swatches here, and I ask if these were all made by your staff?

A. Yes.

Q. I show you the first one. This has—and they have little tags with them which indicate the machines on which they were made?

A. Yes.

Q. I show you this one which bears the tag—it says "Consolidated Sewmor Model 770 (old design) Serial Y277-2436."

Mr. Klots: And may I for the record state, your Honor, that that is the Japanese-manufactured machine which is in evidence as Exhibit 111.

I offer it in evidence.

[fol. 1312] I think your Honor wanted these indicated in evidence.

The Court: I would like to have them marked related to each machine.

Mark this Exhibit 111B.

Mr. Weinstein: No objection, your Honor.

(Received in evidence as Defendant's Exhibit 111B.)

Mr. Klots: I offer in evidence one of these swatches that has a tag attached to it entitled "Consolidated Sewmor, Model 770 (model year 1960) Serial No. Y27-5527"—and I will state for the record, your Honor, that that is the machine that is in evidence, a Japanese machine, Exhibit 112, which is a non-infringing machine. It is the barrel-stave type of machine—do you remember that, sir? The barrel-stave type of built-in mechanism.

The Court: I recall that.

Mr. Weinstein: No objection.

(Received in evidence as Defendant's Exhibit 112B.)

Mr. Klots: I may say, if I am not disputed, that by examining the machine you will see that the machine is exactly the same as Exhibit 111 except for the built-in mechanism, [fol. 1313] which is the barrel-stave mechanism instead of a stack of cams.

Finally I offer in evidence a swatch which bears the tag

"Universal TViewer, Deluxe Auto Zigzag, Serial No. 2973062"—which is the machine that is in evidence as Exhibit 113 and is a non-infringing machine.

Mr. Weinstein: No objection, your Honor.

(Received in evidence as Defendant's Exhibit 113B.)

Mr. Klots: I think your Honor might notice the difference between the stitches on the infringing machine and the stitches on the non-infringing machines. They are the same patterns but notice the quality.

Mr. Weinstein: Your Honor, I do not think that kind of comment should be brought out before the witness. I think if they are the same, the witness should be asked to testify as to that, or else—it certainly should not be coming from Mr. Klots.

The Court: Well, we can observe them whether he makes the comments or not.

Mr. Klots: I certainly did not mean to argue.

The Court: Can you tell me whether the density of this line of stitching we find here—that there is a density of stitching on any particular line—is the result of the speed [fols. 1314-1315] with which the machine can be operated, or whether it is the result of the conformation of the perimeter or outside of the cam—if you know?

The Witness: The density does not relate to the cam. It relates to the stitch length mechanism—the stitch length control and the linkage to the feed dog.

The Court: All right.

* * * * * * *

[fol. 1316] New York, June 1, 1961, 10.30 o'clock a.m.

Mr. Klots: Miss Hutton, will you resume the stand.

JESSIE HUTTON resumed.

Direct examination Continued.

By Mr. Klots:

Q. Miss Hutton, on page 1295 of the record you stated that the 404 machine—the 404 Singer machine is the "first of the slant needle series."

Those were your words. What did you mean by the "first of the slant needle series"?

A. We consider the slant needle series to be the 404, the 403 and the 401. The 404 is first in the sense that it is lowest in price and simplest in features.

Q. Lowest in price?

A. We are working from the bottom up.

Q. You did not mean that it came out before the 401?

A. No, it did not.

[fol. 1317] Q. As a matter of fact it came out about two years later, didn't it?

A. Yes, I believe so.

Q. Now I remind you of these exhibits, which are the swatches which were made on the 401, 403 and 404, and the Pfaff 259. I ask you are these stitches which appear on these swatches the only stitches that can be made on those different machines.

A. No, they are not. There are many more.

Q. And what does it depend on?

A. It depends on how many cams are supplied with the machine, how many are designed for it. There are many more supplied with these machines.

Q. Or how many could be supplied?

A. Yes.

Q. Now this sounds like a simple question, but tell us, Miss Hutton, what does the housewife use a sewing machine for?

A. In its broadest sense, to sew.

Q. Right. And what does sewing ordinarily consist of in the American home?

A. Sewing consists of fabricating clothing for the family, fabric furnishings for the home.

Q. Yes. And what stitches are used for these different [fol. 1318] purposes?

A. The stitch primarily used is the straight stitch.

Q. And what operations is the straight stitch ordinarly used in?

A. Of course seaming, joining two pieces of fabric together, is the basic of all sewing.

Q. Yes. And what are the most usual sewing operations in the home?

A. Almost anything one makes requires seaming sections together. It requires some kind of closure. It requires some kind of hem or edge finish.

Q. What kind of sewing does the housewife mostly do—I mean, making clothes or making draperies or making what?

A. Home sewing in America consists primarily in making women's and children's dresses and leisure clothes, garments to wear. In a lesser degree it consists of making draperies, curtains, slipcovers; to some extent linens, tablecloths, place mats and things of that kind.

[fol. 1319] Q. Insofar as the clothing is concerned, what is the stitch ordinarily used?

A. Straight stitch.

Q. Are zigzag stitches sometimes used in the making of clothing?

A. Zigzag stitches are used in finishing these garments. The finishing steps are primarily finishing the edges of seams so they do not ravel. A finishing step is the hem, either preparing the hem for handling or blind stitching the hem in its complete form. Making button holes, sewing on buttons, aspects of construction.

Q. How would you describe the types of zigzag stitch that is used for those purposes?

A. Those zigzag stitches are described as being functional.

Q. Is there a further subheading under functional zigzag stitches?

A. There are different types of functional stitches. The basic zigzag stitch probably is used most extensively because it may be used for seam finishing. It is definitely used for button holes, for sewing on buttons. It is a good stitch in mending operations. It is a good stitch in seaming some of [fol. 1320] the specialty seams, hairline seam or a seam in very heavy yard furniture, canvas, and the like, where you want a very durable seam, with two rows of stitching.

Q. Is there another kind?

A. The blind stitch of course is a good stitch for over edging, where it is used as a seam finish. It is an excellent stitch for blind stitching a zipper insertion, for hemming in draperies or house clothes, children's dresses, where it duplicates hand stitching and yet is done at a great deal more speed.

The Court: Does Singer publish a manual for each of these various types of machines which discloses the various types of stitch which can be used by each particular machine and the purposes for which those stitches may be employed?

The Witness: That is the instruction book.

The Court: It might be advisable to have some of those instruction books offered in evidence.

Mr. Klots: Yes.

The Witness: The instruction books are with the attachment sets and when we discuss the 403 it is in evidence.

Mr. Klots: One of them is already in evidence. It is in the [fol. 1321] little box that has the extra cams.

The Court: I know it is.

Mr. Klots: We will see that those are put in evidence.

Q. Is there a third functional type of zigzag stitch?

A. Yes. We call it the multiple stitch zigzag. It is an excellent stitch for finishing seam edges on tweed-like fabrics. It is very good for seaming interfacings, when one wants a very flat butted seam. It is an excellent ending stitch for repairing linens. It is used always when applying elastic or sewing elastic fabrics together.

Q. I show you these swatches in evidence, showing stitchings which were made with the 404, 403, 401 and the Pfaff 259 machines. They are Exhibits 143, which is the Pfaff, 141C, 116C and 106C. I will ask you if you will point out to the Court the three types of zigzag stitches that you just mentioned, basic stitch, the blind stitch and the multiple stitch?

A. This is the basic zigzag stitch. It is the heavy line. As it is seen here, it is used as a satin stitch. This stitch, opened [fol. 1322] up, made narrower or to a specific width for the operation, is the functional zigzag stitch.

Mr. Klots: The witness is referring to Exhibit 106C and to the stitch at the bottom of that exhibit.

Q. That is the basic zigzag stitch?

A. Yes. The stitch immediately next to it is the blind stitch. This blind stitch is the one for over edging.

The Court: Might it not be better if we just marked these physically on the exhibit? This top one is the basic zigzag stitch?

The Witness: Yes.

The Court: Basic zigzag stitch. The second one is called what?

The Witness: The blind stitch.

The Court: I will mark that on the exhibit physically, on Exhibit 106C, the blind zigzag stitch.

The Witness: We normally call it the blind stitch.

The Court: That has to be done on a zigzag machine, with a cam?

The Witness: Yes.

The Court: We will call it the blind zigzag, that would be [fol. 1323] a correct technical description?

The Witness: Yes.

Q. His Honor said it had to be on a zigzag machine with a cam. Is it necessary to have a cam?

A. It can be done on a manual zigzag machine and on the 404 machine with the zigzag attachment.

Q. You mentioned a third type of functional zigzag stitch. That was the multiple stitch, was it?

A. Yes. The first line on the sample——

The Court: That is called what?

The Witness: Multiple stitch zigzag.

The Court: Then we will mark that multiple stitch zigzag, is that right?

The Witness: That is right.

Q. That is the top line in this particular exhibit, is it not?

A. Yes.

The Court: We will mark that with an arrow, multiple stitch zigzag.

Q. Each of these exhibits that I have just enumerated, these swatches, carry those three stitches, do they not?

A. Yes.

Q. These functional zigzag stitches, are they seen usually [fol. 1324] by the outside viewer of the lady's garment?

A. No, they are not.

Q. Do most American women design their own clothes?

A. Very few American women design their own clothes in proportion to the number sewing.

Q. How do they go about making their clothes, what do they use to help them?

A. There are five major pattern companies that supply a tissue pattern, printed tissue pattern. There are a number of other companies of lesser importance who also supply a paper pattern.

Q. Are you familiar with the patterns that these different companies issue?

A. Yes.

Q. Is that part of your job?

A. Yes, it is part of our job, it is part of our dressmaking course, it is part of supervision. We do a great deal of our own sewing, each of us in the department.

Q. What kind of stitches do these patterns require?

A. The patterns require the straight stitch.

[fol. 1325] Q. I do not know whether you have already mentioned this, but is the sewing machine also used to mend or repair clothing?

A. Yes, mending, repairing and maintenance of clothing and household items is an important function of the home sewing machine.

Q. What kind of stitches are used in repairing?

A. The straight stitch is used probably the most extensively in mending and repairing. The multiple stitch zigzag is a useful stitch as well, and the basic zigzag, too.

Q. Tell us what are the various kinds of ornamentation which a home sewer usually places upon her clothes.

A. There are many established types of ornamentation. The use of buttons, the use of buttonholes, the use of pockets, pleating, tucks, darts.

Q. How about lace?

A. Lace, lace insertion and lace edging are important. Braid is important. Bands of trimming are important; decorative stitching.

Q. I beg pardon?

A. Decorative zigzag stitching is also part of the decorative picture.

[fol. 1326] Q. What about applique?

A. Applique is used.

Q. Have you mentioned pleats and tucks?

A. Pleats and tucks, yes. They fall into the construction trims.

Q. Yes. What else along that line in the nature of pleats and tucks?

A. Pleats, tucks, pockets, shirring, cording.

Q. Ruffles, I suppose.

A. Yes, ruffles.

Q. Do any of those decorations need a zigzag stitch?

A. Most of those do not.

Q. Now to what extent does the ornamental zigzag stitch play a role in the fabricating of clothes by American housewives?

A. It is a very small percentage. In fact, we base our judgments on 90 per cent of all home sewing is straight stitching.

Q. Yes.

A. The amount remaining, 10 per cent, is zigzagging and of that, 5 per cent is decorative.

Q. Yes. And what forms of ornamentation do you find are f more importance than the use of the zigzag stitch?

[fol. 1327] A. Those are constructions such as cording, pockets, buttonholes, pleats, darts, ruffles—that area.

Q. Take your appliques that you put on that dress (indicating). The zigzag stitch can be used to put on the applique?

A. Yes.

Q. What kind of a zigzag stitch?

A. It is the basic zigzag stitch.

Q. The basic?

A. The basic.

Q. Do you make your own clothes, Miss Hutton?

A. Yes, I do.

Q. Do you make your own dresses?

A. Yes.

Q. And what types of zigzag stitch do you use in making your own clothes?

A. I am one not liking too much adornment on her dress. I must confess I have used zigzag as decorative on only one dress in the years that we have been promoting zigzag stitching.

Q. You use the functional stitching?

[fol. 1328] A. I use the functional stitching. The dress I am wearing has a great many functional stitches on it, as is true of the many clothes I make today.

The Court: You like tailormade dresses?

The Witness: Yes.

The Court: You use the zigzag to prevent unraveling, don't you?

The Witness: Yes. The seams are finished with the zigzag.

The Court: That material has the zigzag on the end, unless you have a selvage on it?

The Witness: Yes.

Mr. Klots: I would like to put that dress in evidence, your Honor.

(Discussion off the record.)

Q. Did you have any part or role in the development of a 400 series of the Singer sewing machine?

A. Yes. I was asked to work very closely with Mr. Johnson as a consultant to express the customer's point of view.

Q. And what was the feature of that machine that you paid the most attention to?

A. Actually we viewed the machine as a total tool for usage—I mean, we endeavored to make the machine as com- [fol. 1329] plete, yet as simple as possible for the consumer to use.

There were many specifications that were a matter of choice. The straight stitch and all of its implications were considered most important to me, to be of superior quality.

One interesting incident is the design of the general purpose throat plate, the one used when doing any zigzag stitching. There was a choice at one time as to how the undergrooving at the end of the plate which controls the bobbin thread—whether it should favor zigzag sewing or straight stitching, and the decision was influenced towards favoring straight stitching.

Q. Let me ask you this question, coming to the decorative stitch again, does the home sewer require a particular type of zigzag decorative stitch?

A. There are so many types that she does not have one completely in her mind, so that she requires pretty stitches but of no particular type.

Q. What have you observed as to the number of zigzag patterns which the housewife ordinarily employs?

Mr. Weinstein: Objection, your Honor. I do not think the witness is qualified to tell what the housewife thinks.

[fol. 1330] The Court: I understood she was offered as one who had expert knowledge of the field, not only from the sales point of view but from the consumer point of view. I think she has given evidence of it so far by the testimony, which she has given without objection.

You may examine her on it later on. I do not think it would be wise to permit an interruption at this time for the purpose of testing her expert qualifications, but will you make a little note of it on a pad and I will permit you to go into it very thoroughly on cross-examination if you so desire.

Mr. Weinstein: Thank you, your Honor.

Mr. Klots: Would you read the question, please.

(Question read.)

A. They are very limited, and this is based on the fact that the sale of additional cams with both the zigzag attachment and the zigzag machines is very small and has been very small.

Q. That is, you have already testified that Singer offers these additional cams—I forget what the numbers are, but it was offered in evidence; and you say the sales of those additional cams——

[fol. 1331] A. Is very small. For example, the 306 machine, prior to the 319, with it was offered six cams. There were some 24 additional cams. The sale of the extras in that respect were very small, and when the 319 came out we had sufficient in stock that it was decided that since the customer does not avail herself of extra purchase, that we should give them all, so that the 319 carried the full set of 30 cams.

Q. I notice the stitch chart on the 401 machine, which is in evidence, is that flip-up stitch chart. I think it has some 22 patterns.

Did you pick out the patterns that were put on that stitch chart?

A. Yes. We——

Q. That is Exhibit 106.

A. We had a voice in which stitches were placed on the chart, and we also ran every stitch in every combination possible within the multiplicity of the built-in ones.

Q. And you picked out 22?

A. Yes.

Q. Did you think that that was enough?

A. It is more than enough.

Q. Miss Hutton, do sewing machines sold in the United [fol. 1332] States vary as to their different features?

A. Yes, they vary materially.

Q. And would you say they compete even though they vary in different features?

A. Yes, they do.

Q. And what do you think the housewife—what features is the housewife most interested in?

A. We strongly feel the housewife is interested in a full concept of the sewing machine and how well—how easy it is to use, how well it stitches on a wide range of fabrics, how well it feeds those fabrics without causing her any undue difficulty in handling.

She is interested in its durability and whether it operates under many different circumstances without mechanical service or even too much care on her part.

Q. What would you say about the ease of threading—is that important?

A. Ease of threading is extremely important in a sewing machine of any make or type because it must be threaded precisely as it was designed to be. If it is not, it will not stitch properly and sometimes it will not stitch at all.

Q. What about the speed control?

A. Speed control is extremely important for the job of [fol. 1333] detailing on a garment. A machine must start immediately upon contact with the controller. The speed build-up must be gradual and controllable.

Q. What about vision?

A. Vision is important because in many steps of dress construction, one stitch too far means unevenness either in the lapel of the garment or in the bottonhole or in a pocket. Complete control of speed and stitching and vision, to see where you are, is extremely important.

Q. Now I put before you Exhibit 106, which I believe is the 401 machine——

Mr. Klots: Off the record.

(Discussion off the record.)

Q. I put before you a cutaway version of the 401 machine. By that I mean it has a window in it that you can see the inside of it.

Mr. Klots: I would like to offer that in evidence, your Honor, because it is helpful to look at through that window.

Mr. Weinstein: No objection, your Honor.

The Court: Received by consent.

(Received in evidence as Defendant's Exhibit 144.)

[fol. 1334] Q. With the 401 machine in front of you, Miss Hutton, will you point out some of the important features of that machine.

A. To a customer in use, the threading feature is important, and we have a very direct line of threading from spool pin to thread guide, to tension, to take-up, and through several thread guides that can be threaded single-handed and through the needle back, and it is very obvious—in addition to being obvious and traditionally Singer, there is a threading chart in the face plate that opens (indicating). I might say this opens quite easily.

The Court: It opens on edge.

The Witness: Yes.

The Court: And that shows you——

The Witness: It shows the track of threading. It shows you the threading of the bobbin.

Q. All right. What about the needle carrier?

A. The needle clamp, I believe, is what you are referring to. The needle can be replaced with a simple thumbscrew, by loosening the simple thumbscrew.

The needle clamp is so designed that the needle cannot be put in crookedly. It presets itself.

Q. I did not mean to interrupt you. Go right ahead and [fol. 1335] use your own words.

A. The visibility we discussed a bit before, and with it in front of me, it brings to mind the complete visibility because of the slender design of the arm of the machine above the sewing area.

Q. What about the slant needle?

A. The slant needle also is—the needle bar is at a 9-degree angle, bringing it toward the operator, about an inch closer than on a straight needle machine.

The bobbin case is in front of the needle so that the bobbin is merely lifted out, and is a distinct convenience and one which is attractive to customers and educators as well.

[fol. 1336] Mr. Klots: Your Honor noticed the access to the bobbin?

The Court: Yes. Would you say that the sales appeal of a machine depends primarily upon three factors: visual attractiveness and appearance; simplicity in mechanical structure and design; and effectiveness of sewing operation?

The Witness: I think that is a good summary.

Q. Go ahead and tell us some of the other features of the 401 machine.

A. The lifting throat plate is important, instead of using screws and having to use a screwdriver, the throat plate is easily lifted and is removable for oiling. It is also lifted for darning and embroidery work. The stitch length adjustment and the reverse feeding lever are appealing to the customer because we can easily adjust to a given stitch length, the scale is marked from 6 to 20, approximating the number of stitches to the inch. There is also a fine area for a micro stitch adjustment in achieving close satin stitching. Of course, the charts are important.

The Court: All of this is depicted in your instruction book that accompanies each machine?

The Witness: Yes.

[fol. 1337] The Court: It describes what each particular part is that you have indicated and how it is to be operated and where?

The Witness: Yes.

The Court: And the result of its operation?

The Witness: Yes.

Q. What about the gear drive?

A. The gear drive is not quite so easy to see. It is extremely important because the motor is directly geared to the machine. It is all enclosed. It is more than a built-in motor, it is a directly geared motor.

Q. Is that somewhat unusual in sewing machines?

A. It is not unusual in our line of sewing machines. It is especially excellent in giving immediate response.

Q. I mean machines other than Singer machines, what kind of drives do they have?

A. It is usually a belt drive.

The Court: Singer no longer uses the leather belt for mechanical drive of the machine?

The Witness: On some of the less expensive models we still use the belt drive.

Q. You have already mentioned before, when we put the [fol. 1338] machine in evidence, the built-in cams. Was it or was it not a fact that the 319 machine which preceded this machine also had a built-in stack of cams?

A. Yes.

Q. I will have put before you a cutaway copy of the 319 machine.

Mr. Klots: I think we better mark that in evidence, your Honor.

Mr. Weinstein: No objection.

(Defendant's Exhibit 145 received in evidence.)

Q. Will you look at Exhibit 145, the 319 machine with a glass window on it so you can see the inside machinery.

A. Yes.

Q. I think you have already pointed out the way you changed patterns in those machines was to lift one of those levers, and each lever has a printed copy of the design on it?

A. Yes.

Q. Could you lift more than one lever at a time?

A. You could lift one or several or all.

Q. And that would make a different combination of patterns?

[fol. 1339] A. Yes.

Q. It has a replaceable cam also on the outside, does it not?

A. The replaceable cam is controlled by the first lever and is on the front of the machine.

Q. So that the feature of built-in cams and the ability to change the pattern without taking off a cam in the 401 machine was not anything new?

A. No.

Q. Because it existed in the 319 machine?

A. Yes.

Q. And the ability to use two cams at once also existed in the 319 machine?

A. Yes.

Q. In fact you could have used more than two cams?

A. Yes.

Q. So the only new thing from a housewife's point of view as far as changing patterns is concerned on the 401 was to change the pattern by turning a dial instead of flipping a lever, is that right?

A. Yes.

The Court: On 319 could you change the pattern by changing the cam?

[fol. 1340] The Witness: Yes, when you changed the front cam then you increased your multiplicity.

Q. All these features of the 401 machine which you have just been going over, the threading guides, the built-in thread chart, they did not exist on the 319 machine, did they?

A. No, there were no built-in charts.

Q. They were all new features which Singer added for the new machine?

A. Yes.

Q. As a matter of fact, those features except for the built-in cams were also features of the 403 and 404 machine, were they not?

A. Yes.

Q. Miss Hutton, let us go to a little different topic. The machines not only manufactured and sold by Singer, but by other companies, do they have features that the 401 machine does not have?

A. Yes.

Q. What are some of the machines, can you name some of them?

A. The Nechhi Supernova Ultra, the Elna Plana Supermatic, the Kenmore 90, the Brother Super Flairmatic, I believe, and there is another, Vigorelli Fantasy, I think it is.

[fol. 1341] Q. I would like to put before you the Necchi Supernova Ultra machine.

The Court: Has this been offered in evidence?

Mr. Klots: I offer it.

Mr. Weinstein: May we know the purpose?

Mr. Klots: I offer this machine and some of these others that have just been mentioned to show that there are numerous machines with features that the Singer 401 does not have that compete with the Singer 401, and none of these machines have built-in cams, they have only replaceable cams. The purpose is to show that the replaceable cam feature is in effect a minor feature, that these other features are really more important from a competitive point of view. That is the purpose of the offer.

Mr. Weinstein: With the exception of Mr. Klots' statement that the built-in cam is a minor feature, the government I think is willing to agree to everything Mr. Klots says in that many machines have many features that are either found on Singer machines in different form or various other features. I don't think this is in issue here, and if we are going to go through a series of machines which do not have [fol. 1342] anything to do with the principle related in the patents, namely, machine carried multiple cams, if we are going into needles and bobbins and everything else, I think we are wasting the Court's time. It isn't in issue in this case.

The Court: Can I take your first statement as being a concession by the government on the record?

Mr. Weinstein: May I have it read, your Honor?

(Record read.)

The Court: I want to know if this is a concession being made by the government.

Mr. Weinstein: Could we have Mr. Klots' statement read back also?

The Court: I am concerned with your statement. Suppose I give you a few minutes to talk about this. We will take a five-minute recess. I would like to know just what the government's position is on this. It is a factual concession, and I would like it so stated unequivocally on the record.

(Recess taken.)

Mr. Weinstein: Your Honor, I beileve Mr. Klots inadvertently used the term "replaceable cam" instead of [fol. 1343] "multiple cam" and would like to correct his statement.

Mr. Klots: I would like to say when I offered the exhibit, I stated the replaceable cam feature was a minor point,

what I meant to say was that the built-in stack of cams was a minor point.

Mr. Weinstein: I don't think that the government wishes to concede to that revised statement.

The Court: I am not concerned with Mr. Klots' statement so much as I am with the statement you yourself made which was independent of what Mr. Klots said.

Mr. Weinstein: I incorporated Mr. Klots' statement.

The Court: There was an interruption in your thought and then you made the statement. Can I take the statement you made as being a factual concession for the purposes of this case by the government?

Mr. Weinstein: No, your Honor.

The Court: You withdraw the statement?

Mr. Weinstein: Yes.

The Court: What then is the basis of your objection?

Mr. Weinstein: We think the Court's time is being need-
[fol. 1344] lessly taken up with whether the needle is zero degrees or nine degrees——

The Court: Then an objection might be sustained as to a good part of the evidence introduced in this case by the government. The objection is overruled.

(Defendant's Exhibit 146 received in evidence.)

The Court: I take it this has a distinct bearing on the market and availability of substitutes and whether or not there was other competition in the field irrespective of the competition which was created by the issuance of the Singer 401 embodying the patents that they acquired and the licenses that they acquired.

Mr. Klots: Yes.

By Mr. Klots:

Q. Looking at Exhibit 146, which is a Necchi machine, Miss Hutton, will you point out to the Court some of the features on that machine which are not offered by Singer on the 401 machine or any other machine?

A. That are not offered by Singer on the 401 or any other?

Q. Yes.

[fol. 1345] A. This is a replaceable cam machine that has three cam followers, each doing something differently. It is termed a triple impulse action.

Q. They do not each of them make a different zigzag stitch?

A. No, they each control something different in the mechanism of the machine. One controls the swing of the needle from side to side or the lateral movement of the needle or the bight, term it what you will, it is the same thing. Another controls the needle position which means that the design originates from the left, from the right or from the center. The third controls feed motion which means the stitching is automatically controlled forward or backward or the length of the stroke is regulated. There are other features. The pressure that is exerted on the feed is regulated or is a gauge adjustment, it is numbered from 1 to 8. Pressure needs to be regulated for different weights of fabric.

Q. What about a stitch elongator?

A. That relates to the stitching. There is a dial for stitching elongation. There are a number of settings or it may be used at intervals. This serves to throw more needle penetrations into a single rotation of the cam, which, if we start [fol. 1346] out with the short ball stitch, we can wind up with the long ball stitch. The range is something like from 36 to around 200 needle penetrations with the one cycle of the cam.

The Court: Does that control the density of the stitching, the closeness of the stitching?

The Witness: It relates to that, which means the stitch can be very dense and be elongated. Without this, the stitch density is disturbed with elongation.

Q. That cannot be done on the Singer 401?

A. That cannot be done on the Singer machines.

The Court: What can you do on the Singer that you cannot do with this Necchi?

The Witness: Nothing.

The Court: You can do everything?

The Witness: Yes.

The Court: By doing everything, you mean sewing operations?

The Witness: Yes, provided a particular cam was provided, they can make any stitch we can make. Because they have a follower that has the same impulse control as our follower.

The Court: So I understand you to say that this Exhibit [fol. 1347] 146, this Necchi machine, performs all the functions, all the operations which are obtainable from your Singer 401?

The Witness: Yes.

The Court: In addition to these extra features which are on the Necchi, Exhibit 146, which are not on the Singer?

The Witness: Right.

Q. I show you this swatch and ask you if this swatch has on it stitchings that were made by your organization under your supervision and observation on this machine, Exhibit 146?

A. Yes.

Mr. Klots: I offer it in evidence.

Mr. Weinstein: No objection.

(Defendant's Exhibit 146-A received in evidence.)

[fol. 1348] The Court: It seems to me that the testimony of this witness, just given with reference to this Exhibit 146, is very vital to this case. If so——

Mr. Elkins: Well, that will have to be determined, your Honor—in the due course of the proceedings that will be determined.

The Court: When you say "it will be determined" you mean whether her statement is accurate or not?

Mr. Elkins: That's right, your Honor. Whether or not she understood your question as you understood it and as I understood it is a question that will have to be explored.

The Court: Yes.

Mr. Elkins: And it will be explored.

The Court: I would like to have you make a note of that on your yellow pad. I regard that as very important.

By Mr. Klots:

Q. Will you look at Exhibit 146A and show the Court what stitches on that were possible on the Necchi machine, Exhibit 146, and which are not possible on the Singer 401.

A. Rows 7, 8 and 9 from the top are stitches that employ the use of cam control feed and stitch elongation.

[fol. 1349] They also employ the use of the needle position cam follower.

I am sorry, I was incorrect in that these do not employ needle position and cam follower.

The Court: They employ needle elongation?

The Witness: Stitch elongation, cam control feed.

The Court: Wait. I am marking this down.

That is one, stitch elongation; two, cam control feed.

What else did you say? Anything else?

The Witness: I said one thing which was incorrect and I corrected it.

The Court: You say these two features are not available—the stitch elongation and the cam control feed are not available on the Singer 401.

The Witness: These are not available on Singer 401 or any other Singer.

The Court: Not available—I am putting this down simply as a record of your testimony—not available on Singer, either 401 or any Singer; is that correct?

The Witness: That's right.

The Court: I will make it "Not available on Singer models."

[fol. 1350] I simply mark that as a notation of what you testified to concerning this swatch, which is Exhibit 146A.

Mr. Klots: That is a very good way to do it.

The Witness: Now the needle position is illustrated in Rows 1, 2 and 3.

The Court: Let us mark this—1, 2 and 3 from the top. Those three, they employ what?

The Witness: The needle position cam and cam follower.

Q. Which the Singer 401 does not have?

A. Does not have.

The Court: Needle position cam and cam follower—and you say that——

The Witness: This also employs stitch elongation.

The Court: Stitch elongation.

Are those two features available on Singer models?

The Witness: They are not.

The Court: I will make a little notation here, it simply being a record of your testimony, "Not available on Singer." All right.

Q. These additional features on the Necchi machine that you just described to the Court, as I understand it they are not part of any built-in multi-cam zigzag pattern mecha-
[fol. 1351] nism; is that right?

A. May I have that statement again, please.

(Question read.)

A. That's right, these are all replaceable.

Q. They have a separate cam mechanism to make these different features?

A. Yes.

Q. Miss Hutton, I show you this document here and ask you what it is. It is rather tender.

A. This is a feature comparison chart that is used by the sales organization selling Necchi-Elna, to train their organization to combat the Singer 401.

Q. And does it undertake to compare the Singer 401 with the Necchi machine that you just described?

A. It compares the Necchi and Singer, feature by feature. This is the Necchi Supernova Ultra, and the Singer 401 (indicating).

The Court: It is on the right side as you look at it?

The Witness: Yes, the 401 is on the right.

The Court: This is sales propaganda?

The Witness: Yes, sales training.

The Court: What do you mean by sales training?

The Witness: It is not consumer; it is not passed out to the
[fol. 1352] consumer. It is used in training their organization—sales force.

The Court: Do you offer it in evidence?

Mr. Klots: I offer it in evidence.

Mr. Weinstein: We object to it, your Honor. I do not think there is any foundation for it. I do not know who made it, who made the comparisons, who put the thing together, where it came from, and there is no foundation in the testimony of Miss Hutton for this document.

The Court: We will ask her a simple question—two questions.

Have you ever seen this paper before?

The Witness: Yes, I have.

The Court: Where did you see it? Under what circumstances?

The Witness: I saw it originally in the office as an item of concern that Necchi was informing their sales organization thusly.

The Court: Do you know where it was obtained?

The Witness: I do not.

The Court: It was obtained by Singer?

The Witness: By some member of our selling organization.

[fol. 1353] The Court: It was part of your office records, was it?

The Witness: I—yes.

The Court: I am going to take it.

Mr. Weinstein: Your Honor, if we may just press our objection, this makes a purported complete comparison between two machines. I do not think that Miss Hutton purports to be an expert on the Necchi machine, on its mechanical features.

The Court: No. She simply says that this is a chart put out by one of their competitors where there is a distinct comparison made between the Singer machine and this Necchi Ultra machine.

I am going to take it in evidence, and I am going to ask Mr. Klots later to produce somebody from Singer who will testify as to where he got this and what he knows about it; and if necessary to bring down somebody from Necchi—give him a subpoena to come down here.

Mr. Klots: All right.

The Court: If the government questions its authenticity.

Mr. Klots: All right, your Honor.

The Court: Find out from the people who purport to have issued this whether or not it is part of their sales training [fol. 1354] —a subpoena to the general manager here in New York—get him down here as a witness.

I think we should mark this as 146B.

(Defendant's Exhibit 146B received in evidence.)

Mr. Weinstein: The record will show I have an objection.

The Court: Yes, the record will show your objection. The record shows the Court's ruling and the Court's instruction that if this additional evidence is not presented as to the source of this Exhibit 146B, you may move to strike it out.

At this time I am going to take it in evidence.

By the Court:

Q. Looking at this Exhibit 146B, over on the extreme right side I see the notation "S1. Carrying case does not convert to a full size work table."

In the portable Singer—you make a portable Singer 401?

A. The 401 is the same in the cabinet model as the portable except for the addition of a small plastic base.

Q. Does your Singer 401 portable have a carrying case [fol. 1355] that does not convert to a full size work table?

A. The carrying case does not convert to a full size work table.

Q. Then it has "S2. Does not have a free arm for tubular sewing."

I suppose "S" means some designation for Singer—that appears to be common sense.

Does the Singer 401 have a free arm for tubular sewing?

A. It does not.

Q. What is tubular sewing?

A. Tubular sewing does not relate——

Q. Is that a sort of a piping?

A. It relates to the Elna. It is the cylinder bed that is free, so that instead of having a square bed it has a small round bed on which can be slipped a stocking for turning, or you can stitch on a sleeve.

Q. Now "S3. Does not have a calibrated scale to adjust lower tension."

Mr. Klots: May I call your Honor's attention to the fact that you are reading——

The Court: I am reading from what refers to the portable——

Mr. Klots: It refers to Elna, not Necchi.

[fol. 1356] The Court: Yes, but the witness has pointed out that the 146 Necchi has a calibrated scale to adjust lower tension.

The Witness: No, the Necchi has a calibrated scale to adjust pressure.

Q. Pressure.

A. Necchi does not have a calibrated scale for tension, but Elna does have.

Q. Can you make on the Singer 401 Turkish hemstitching?

A. We cannot because it requires cam control feed.

Q. Can you make it on this 146 Necchi, if you know?

A. We did not make it. It is my impression that it could be made because they have cam control feed.

Mr. Klots: If your Honor will look at the lefthand side of this exhibit you will see Item 3 there, which is entitled—which says, "Tuning knob for elongation of design units," and it points to the thing.

The Court: Yes, I have seen that. They have a number.

Mr. Klots: Then on the other side, on the Singer side it says, "No provision" for it.

The Court: I see it. I have been reading that.

[fol. 1357] It appears to be a very powerful sales document. If that is so, it affords some considerable competition.

Have you looked at this, Mr. Elkins?

Mr. Elkins: I beg pardon?

The Court: Are you familiar with this?

Mr. Elkins: Yes, your Honor.

The Court: I thought from your objection that you did not see it before.

Do you dispute that this is a document issued by Necchi to its regular sales force?

Mr. Weinstein: We have no knowledge of that at all, your Honor. We saw it for the first time when Singer presented us a copy of it.

The Court: When was that?

Mr. Weinstein: Last week, your Honor.

The Court: Haven't you, in the diligent preparation of this case that I know you have had, checked up on it?

Mr. Weinstein: No.

The Court: Don't you think you should?

Mr. Weinstein: No, your Honor, we have not.

The Court: I mean, rather than subject the Court to having additional testimony presented, don't you think you [fol. 1358] should be in a position to state that this is or is not a Necchi trade organization or internal organization document?

Mr. Weinstein: Your Honor, we think that is the defendant's burden of proof.

The Court: Of course it is, but I know, or I thought that you are anxious to lighten the burden of the Court.

All right. Apparently with the Court's position of putting you to prove, Mr. Klots, bring somebody down from Necchi.

Mr. Klots: Yes.

The Court: I will have to listen to that testimony even though I thought I might be in a position to avoid it. All right.

Mr. Klots: We will do this as expeditiously, your Honor, as possible, but——

The Court: Don't hurry this. I regard it as very important evidence. I do not want to hurry you.

Mr. Klots: I would like to put before the witness the Elna-Plana Supermatic Machine.

The Court: Don't take my comments to counsel as being any indication that I am at all impatient with your presentation. I regard this as vital evidence, and I do not intend to [fol. 1359] limit you in any way in order to save time.

Mr. Klots: I would like to offer that machine in evidence.

The Court: Any objection?

Mr. Weinstein: Again, your Honor, I think there is no foundation at this point.

The Court: What do you mean by foundation?

Mr. Weinstein: Mr. Klots has not indicated why he is offering it in evidence.

Mr. Klots: I am offering it for the same reason that I offered the Necchi machine.

Mr. Weinstein: No objection.

The Court: He offers to show a competitive machine in the same relevant market.

Mr. Klots: That is the purpose.

The Court: Any objection in view of Mr. Klots' statement?

Mr. Weinstein: No, your Honor.

The Court: Received in evidence by consent.

(Received in evidence as Defendant's Exhibit 147.)

Mr. Weinstein: Your Honor, I would like to correct that. When you say "Received by consent," we have a general [fol. 1360] standing objection to things which we say are not in the same relevant market, and also that we say "relevant market" as generally used is not an issue in this case. We are not waiving our right to object to this. We object to this machine for the same reason that we object to any machine

that is not a machine-carried multi-cam machine coming in evidence.

The Court: That is your objection.

Mr. Weinstein: Yes.

The Court: And I have ruled on it. It is in evidence now as Exhibit 147.

Mr. Klots: This Exhibit 147, I believe, is known as the Elna-Plana Supermatic Machine.

By Mr. Klots:

Q. Miss Hutton, will you just point out on that machine one or two of the features that the Singer 401 or the 400 line does not possess.

A. This is a replaceable cam machine. It has stitch elongation—oh, it does not have stitch elongation. It has cam control feed.

Q. Yes. What else does it have?

A. It has a bobbin in back of the needle which is in a fixed bobbin case.

It has the calibrated bobbin tension adjustment, and it has [fol. 1361] —they are the major ones.

Of course it is very streamlined. The bobbin winder is concealed.

Q. You have a bobbin winder that is concealed.

Now I show you this swatch and ask you if this contains stitches that were made on this Exhibit 147 by your organization, under your supervision and under your observation.

Were they made on this machine?

A. These were made on this Elna machine and by our organization.

Mr. Klots: I offer it in evidence.

Mr. Weinstein: Subject to our overall objection, your Honor, we have no other objection.

The Court: Received in evidence.

(Received in evidence as Defendant's Exhibit 147A.)

Q. Looking at Exhibit 147A, are there any stitches on that exhibit that cannot be made on the Singer 401 or any of the 400 series of the Singer machine?

A. Yes, there are.

Q. Will you show the Court which ones cannot be made on the Singer machines that I have mentioned?

A. The seven lines counting from the bottom of the [fol. 1362] swatch.

Q. That is because of what feature?

A. The cam control feed.

The Witness: (To the Court) This is the Turkish point about which you asked.

The Court: That is the Turkish point?

The Witness: Yes.

The Court: So we will mark that "Turkish point" (Marking).

You say that the seven rows of stitching cannot be made on Singer, right?

The Witness: Cannot be made on Singer.

The Court: I will put that on here simply as a record of this witness's testimony so that we will be able to identify it.

The Witness: Because they require cam control feed.

The Court: Because they require cam control feed, right?

The Witness: Yes.

The Court: I will put that here simply as a record of her testimony.

By Mr. Klots:

Q. Miss Hutton, I put before you another machine which [fol. 1363] is known as the Kenmore, Model 90.

Mr. Klots: I offer it in evidence for the same reason that I offered the Elna and the Necchi machines.

Mr. Weinstein: Is this a replaceable cam machine?

Mr. Klots: Yes.

Mr. Weinstein: We have our same general objection, your Honor. These are all replaceable cam machines.

The Court: By your "same general objection" I take it your objection is, number one, it is the government's contention that the issue of "relevant market" is not present in this case.

Mr. Weinstein: That's correct, your Honor.

The Court: And, two, that this is a replaceable cam machine and therefore in any event is irrelevant.

Mr. Weinstein: That's right, your Honor.

The Court: That is the nature and the total of your general objection?

Mr. Weinstein: Yes, sir.

The Court: I have overruled that for the present—and a specific objection, outside of the general objection, have you any?

[fol. 1364] Mr. Weinstein: No, your Honor.

The Court: It is received in evidence.

(Received in evidence as Defendant's Exhibit 148.)

By Mr. Klots:

Q. Will you look at Exhibit 148 and tell us first whether or not that is a replaceable cam machine.

A. This is a replaceable cam machine.

Q. That is to say, so far as making zigzag patterns, it uses a replaceable cam device?

A. Yes.

Q. And do certain boxes of cams come with it?

A. This is the box of cams (indicating).

Mr. Klots: I will offer that as part of the exhibit.

The Court: Mark that 148A.

(Received in evidence as Defendant's Exhibit 148A.)

A. This machine is more similar to the Necchi. It has triple-action cam followers, one controlling the bight, one controlling needle position, and one controlling feed motion.

[fol. 1364a] The Court: What is the country of origin of this machine?

Mr. Klots: I was going to ask that in the next question.

The Court: Oh.

Q. Where is that machine made, Miss Hutton?

A. It is made in Japan.

Q. And it is sold by what company?

A. Sears, Roebuck.

[fol. 1365] Q. Did you want to say any more about the features that this machine has that the Singer 401 and the other 400 series do not have?

A. This has stitching elongation and has a special device for making button holes automatically, which is a separate

plate attached which takes the feed motion from the feed shaft and pinion which works in the cams which are replaceable for size underneath the button hole plate. It has another unit of cams for button holing.

Mr. Klots: We might as well offer that in evidence too.

(Defendant's Exhibit 148-B received in evidence.)

The Court: Can you do this whole operation on the Singer 401?

The Witness: We can make button holes on the Singer 401, but we do not have the means of controlling the length of the button hole.

The Court: You can make only a standard button hole?

The Witness: The control of the length is a manual stop.

The Court: This is controlled by the machine, on this [fol. 1366] Kenmore?

The Witness: Yes.

The Court: You can make a long button hole or a short button hole by putting in this attachment?

The Witness: Yes.

The Court: But in the Singer you have to manually stop it?

The Witness: Yes.

The Court: When you reach your desired length, you have to stop and come back on the other side?

The Witness: Yes.

The Court: With this attachment on this Kenmore, it is all done automatically?

The Witness: Yes.

The Court: You have a sample here?

The Witness: We did not make that sample, that is part of the equipment.

Mr. Klots: I have a swatch here, sir.

By Mr. Klots:

Q. I ask you if this swatch was made on Exhibit 148?

A. Yes, it was.

[fol. 1367] Q. By your people and under your supervision and observation?

A. Yes. They made one button hole of each type, the eyelet, the eyelet end and the straight button hole.

Mr. Klots: I offer that.

Mr. Weinstein: We have no specific objection.

(Defendant's Exhibit 148-C received in evidence.)

Q. Would you look at Exhibit 148-C, which you say was made on this Kenmore 90 machine sold by Sears Roebuck and made in Japan, and point out some of the stitches on that that cannot be made on the Singer 401, 403 or 401? Start with the button holes at the bottom of the swatch.

A. The ten rows of stitching at the bottom of the swatch employ cam control of feed and stitch elongation. Singer does not have these facilities.

The Court: You cannot produce those stitches on the Singer 401 or Singer models?

The Witness: That's correct.

Q. Short of producing a special cam, you cannot produce those?

A. No.

[fol. 1368] The Court: I will mark here that these employ stitch elongation and what else?

The Witness: Cam control.

The Court: And cannot be made on Singer machines?

The Witness: That's right.

The Court: I am putting this on the swatch simply as a record of this witness' testimony.

Q. Anything else on that swatch?

A. The remaining stitches above are stitches which illustrate the cam control and needle position, the four groups of three above it.

The Court: These do what? These 12 rows are examples of what?

The Witness: Cam control and needle positions.

The Court: Those 12 lines cannot be produced on the Singer machine?

The Witness: It requires explanation, your Honor.

The Court: Give us the explanation.

The Witness: The arrowhead illustrates it well. You have seen an arrowhead made on Singer. The thing we cannot do is to elongate that arrowhead. Another thing we cannot do [fol. 1369] is by putting into action another cam follower

use that same cam to produce the right and left needle position variation shown in the line of stitching above and below the arrowhead. We would require a separate cam.

The Court: You cannot shift from one side to the other unless you put a new cam in?

The Witness: That's right, your Honor.

The Court: All right.

By Mr. Klots:

Q. I would like to put another machine before you.

The Court: Incidentally, on this Kenmore model that we have just had, Exhibit 148, can you produce all the sewing products on this exhibit that can be produced on the Singer 401?

The Witness: Yes, providing there is a cam designed to do the particular function.

Q. I show you this machine, Miss Hutton.

Mr. Klots: First I will offer it in evidence. This is a Vigorelli Fantasy model.

Mr. Weinstein: Is this a machine under which Singer holds a license?

Mr. Klots: Yes, it is.

[fol. 1376] Mr. Weinstein: Singer is licensed to produce this machine?

Mr. Klots: It is licensed as to certain parts of it. I am not sure it is licensed to produce the entire machine.

Mr. Weinstein: We have no specific objection, your Honor.

The Court: Received.

(Defendant's Exhibit 149 received in evidence.)

By Mr. Klots:

Q. Will you look at Exhibit 149 and tell us whether or not this is a replaceable cam machine?

A. It is.

Mr. Klots: Your Honor will recall that Vigorelli has the right to make a built-in cam machine if it so desires.

Q. What does it have that the Singer 401 and the other 400 series machines do not have?

A. This has many things. It has cam control of feed. It has stitch elongation. It has a lateral movement of a section of the bed of the machine that permits an extremely decorative stitching. It affords great multiplicity in the use of the [fol. 1371] various dials that we see on the front of the machine that give greater variety to the stitching patterns.

Q. Did you mention the cam control of the lateral feed?

A. Cam control, yes, section of the bed for lateral feeding. This is entirely different from any other machine I know of.

Q. What do you mean by lateral feeding?

A. All the zigzag machines that we have discussed up to this point have been limited in the width of the decorative stitch that could be performed by the swing of the needle which is from three-sixteenths to a quarter inch maximum on all zigzag machines. This has a lateral swing that approximates three-quarters of an inch. The needle does not swing that far, but this section of the bed moves in and out. I think I can demonstrate that by a motion of one of the controls.

Q. Will you show the Court what you mean by that lateral swing?

A. I am rotating the dial that controls the cam follower for this function, and the whole bed of the machine while stitching moves back and forth, the whole feeding element, the stitch forming element.

[fol. 1372] The Court: That is a feature that Singer does not have?

The Witness: This is the only machine I know that has it.

The Court: I have observed it move.

The Witness: It is fantastic, Fantasy is a good name for it.

The Court: What is the effect of it?

The Witness: It gives greater pattern width.

The Court: You can put a broader width to your stitching?

The Witness: Yes.

The Court: It is very ingenious.

Mr. Elkins: I don't think it is particularly ingenious, I don't think it is fantastic at all, your Honor.

Q. I show you this swatch and ask you if these stitches were made on this swatch by Exhibit 149 under your supervision and observation?

A. Yes.

Mr. Klots: I offer it.

Mr. Weinstein: No specific objection.

(Defendant's Exhibit 149-A received in evidence.)

[fol. 1373] The Court: This machine apparently permits a more varied embroidery work on garments?

The Witness: Yes.

The Court: Can you also put this on sweaters or knit goods too?

The Witness: Within limit. A backing is required and more careful handling. The zigzag varieties are stretched, so it would be practical.

The Court: You say none of these large elongations can be accomplished with the Singer machine?

The Witness: That is correct.

The Court: This was brought about primarily by the movable base which moves by a cam?

The Witness: Yes. It functions on all stitches except those near the button holes, the six lines at the top of the swatch do not employ the lateral motion of the bed of the machine. You will notice stitching elongation in all of these patterns.

The Court: The design is either stretched out or contracted?

The Witness: Yes.

The Court: You lack the feminine touch if you do not appreciate the fantasy of this machine, Mr. Elkins.

[fol. 1374] Mr. Elkins: It is such a heavy machine that it might be used for industrial purposes. I do appreciate it to that extent.

The Court: The witness has just been able to move the machine herself without any apparent difficulty.

The Witness: I believe there was a question about the bed of the machine.

The Court: My question was whether the elongation is controlled by the bed that moved on the cam.

The Witness: The elongation of pattern is not. The exaggerated width is. The difference between this type of width and this type of width, your Honor.

Mr. Klots: Pointing to the top lines and then the bottom lines.

The Court: Yes.

Q. I think, Miss Hutton, we have one more of these machines to show you.

Mr. Klots: This machine is a Brother Flairmatic 190-B model. I offer it in evidence.

Mr. Weinstein: We have no specific objection, your Honor.

[fol. 1375] The Court: Received.

(Defendant's Exhibit 150 received in evidence.)

By Mr. Klots:

Q. This machine, Exhibit 150, is made in Japan, is it not?

A. Yes.

Q. This is a manual zigzag machine?

A. Yes, a manual zigzag machine.

Q. Manually operated zigzag machine?

A. Yes.

Q. Tell us some of the things that it has that the Singer 401 does not have?

A. The most significant point is the built-in button hole device.

Q. Which enables you to do what?

A. Which controls—it has a built-in cam control of feed and of needle position and of bight for the purpose of making a button hole.

Q. If that is true, why is it easier to make a button hole on this machine than on the 401?

A. We merely put our material under the foot, press the button, engage the machine and it completes the button hole without further assistance from the operator. This has a few other features.

[fols. 1376-1376a] Q. That the 401 does not have?

A. It has a three position feed dog height.

Q. What do you mean by a feed dog height?

A. The feed dog height is either up for a normal sewing, a movement which sets it down so the rise is not so high for sewing on silk as indicated here, the out-of-use position is indicated as darn. When one is using hoops, the darn setting is used.

Q. That is different from the 400 series machines?

A. Yes.

Q. What about the reverse, how do you operate the reverse?

A. The reverse of the feed?

Q. Yes.

A. Push button. It has a dial stitch length regulator and a push button.

Q. What about the bobbin winder on that machine, is that a special kind?

A. It is an automatic bobbin winder that is built into the machine. It is a neat arrangement.

* * * * * * *

[fol. 1377] Direct Examination Continued.

By Mr. Klots:

Q. Miss Hutton, what part does your organization play, and by that I mean your educational organization—what part does it play in the merchandising or marketing of Singer sewing machines?

A. I mentioned that we had a staff of field representatives who travel constantly among our shops in the United States. These girls carry programs of employee training on product which includes knowledge of the products as well as sales demonstrations.

Our group who operate in the New York office normally prepare, in conjunction with the sales promotion department, standard demonstrations for the presentation of a sewing machine to a customer. These are used as both training guides and to augment their selling conversation.

Fabrics are also supplied for these demonstrations.

Q. Do you give any advice with respect to the features of [fol. 1378] the sewing machines——

A. Yes.

Q. —on which the home owner places emphasis, for instance?

A. We work with the advertising department in the preparation of advertising copy as to the ultimate use the customer will make of the machine, and the advertising—the emphasis on features that will appeal to the home sewer in use, and of course we have discussed our sewing courses.

We have a dressmaking course and we have courses given free with the machine to new purchasers. These courses are the evidence or proof of the operation of the machine, and we teach in these courses things that would appeal to the customer.

Q. Do you make any effort to keep abreast of competitive machines and new developments?

A. Yes. We are required from time to time to do an evaluation type of sewing test on competitive machines. These reports are submitted to Singer Manufacturing Company—to Mr. Bruder—and in our sales—in the business, they eventually find their way to the product development people.

[fol. 1378a] Q. Now you said, I think, a minute ago that you advised the advertising department regarding features to emphasize in their promotion from time to time.

Is this advice usually accepted by the advertising department?

A. We work with them, we discuss these things, yes. Yes, our advice is accepted by them.

[fol. 1379] Q. Now coming back to this matter of functional zigzag stitches, would you just tell us again briefly the names and purposes of the three types of functional ones that you mentioned?

A. The basic zigzag stitch?

Q. Yes. What does it do, again?

A. It is used functionally for seam finishes, for seaming in certain special instances on heavy seams, in making hairline seams on shear materials, like when we are doing a sheer collar; it is used for button holes; it is used for sewing on buttons.

Q. How about applique?

A. It is used for applique.

Q. And what is the second of these stitches you mentioned?

A. The second of these is the blind stitch. Blind stitch is used for over-edging seams, as a seam finisher, again. It is used for hems, to duplicate hemming.

Q. Finally, the multiple zigzag stitch?

A. That is used for finishing seams on heavy tweeds. It is used for joining elastic to fabric. It is used for joining elastic seams. It is used in making an abutted seam in interfacings for the tailored effect.

[fol. 1380]

Q. And is it or is it not true that the basic zigzag stitch is also used ornamentally as a satin stitch?

A. Yes, the basic zigzag stitch may be used in itself ornamentally or in combination with applique, what the applique

might be, of late, and the blind stitch finds an ornamental use.

Q. Now will you tell us whether or not these stitches that you just recounted can be performed with equal ease and equal effectiveness on a sewing machine with a multiple cam mechanism and a sewing machine with a replaceable cam mechanism.

A. Yes.

Q. Would you tell us whether these stitches can be performed with equal effectiveness on a sewing machine with a manually operated zigzag mechanism?

A. Yes.

Q. Now, would you tell us whether these stitches can be performed with equal ease on a sewing machine with a manually operated mechanism?

A. Of course, the ease depends upon the interest and skill of the operator. I would say that it is slightly less easy. It is entirely within the capacity of the home sewer.

[fol. 1381] Q. Now will you tell us whether or not these particular zigzag stitches that you have just discussed can be performed with equal effectiveness on a sewing machine with a multiple cam mechanism, a sewing machine with a replaceable cam mechanism, a sewing machine with a manually operated mechanism, and a straight stitch machine with a manual zigzag attachment?

A. Yes, except for the button holing and as we have stated in connection with the zigzag machine.

Q. Yes.

A. The straight stitch machine with a zigzag attachment will not do the button holing. It requires an extra attachment for button holing.

Q. Yes. I asked you whether these could be performed with equal effectiveness. Now I ask you whether or not the same zigzag stitches can be performed with equal ease on a sewing machine with a multiple cam mechanism, with a replaceable cam mechanism, a manually operable mechanism and a straight stitch machine with a zigzag attachment?

A. As I have so stated, except for the manual machine and the matter of customer dexterity.

Q. What would you say as to the relative ease of use of all [fol. 1382] four of the above machines for either functional or ornamental stitching, relative ease of use?

• • • • • • •

A. Mr. Klots, the question was equal ease?

Q. Equal ease.

A. It is not quite as easy. Of course, ease is a matter of a personal aptitude. It is not quite as easy on the manual as it is on the others.

Q. And what do you mean when you say it is a matter of personal choice? Is that what you said?

A. Yes, it is a matter of personal choice as to which type [fol. 1383] one prefers. My own mother preferred the replaceable cam type to the two dialing stitch and to the built-in cam mechanism.

Q. You have mentioned the fact that you are familiar with the straight stitch sewing machines having zigzag mechanisms for making a zigzag stitch. Have you ever seen or heard of a straight stitch machine sold today which is not adaptable to taking a zigzag attachment?

A. No. Straight stitch machines sold today will take a zigzag attachment.

Q. Now, the Court has asked you——

Mr. Weinstein: Your Honor, I ask that that answer be stricken. Is the witness testifying that every straight stitch machine will take an attachment?

Mr. Klots: That was the question, as I understood it.

Mr. Weinstein: Yes. Are you saying that you know from your own knowledge that every straight stitch machine——

The Court: Don't you think that would be a proper subject for cross-examination?

Mr. Weinstein: I don't think the witness is even competent to testify as to that, your Honor. She hasn't testified that [fol. 1384] she has examined every straight stitch machine.

The Court: Is this an objection to the question?

Mr. Weinstein: Yes, it is, your Honor.

The Court: Well, objection overruled, and you may cross-examine her on that subject. That is a matter that you might well put down on that yellow pad for cross-examination.

By Mr. Klots:

Q. The Court asked you at pages 1309 and 1310 of the record as to certain stitches that appeared on the swatch made by the 404 machine, which is Exhibit 141-C, and it had to do with the satin stitch, I believe. No, I am wrong about that.

The Court: It had to do with the density of the stitching or the closeness of the stitch.

Mr. Klots: That's right. But it wasn't the satin stitch. I was wrong about that. It was the arrowhead stitch.

Q. And if you will look at these Exhibits 141-C and 106-C, I think that will refresh your recollection as to the arrowhead stitch, and his Honor made a comment about the fact that the 404—let's see what he did say.

[fol. 1385] The Court: My comment was, as I recall it, the density of the stitching to the closeness of each stitch, and I asked her whether that was due to the speed of the machine or to the fault of the mechanism or to what it was due, and the witness gave me an answer.

Mr. Klots: That's right.

By Mr. Klots:

Q. Now what have you— say about that in further explanation, Miss Hutton, as to whether it would be possible on the 404 machine to make as dense an arrowhead stitch as on the 401 machine?

A. The density of the stitch on both the 404 and the 401 machines is controlled by the stitch length regulator, which is the same. If the stitch made with the 404 and the zigzag attachment has been made more dense, it would have been a shorter pattern design because there are 12 needle penetrations to complete the arrowhead while there are 24 needle penetrations in the cam cycle of the 401 and 403 machines.

The Court: By that am I to understand that the cam cycle determines the density of the stitching?

The Witness: The cam cycle determines the density of the stitching and at the same time maintains equal length [fol. 1385a] of pattern.

The Court: Does it determine the density of the stitching?

The Witness: No, because the density of the stitches is determined by the stitch length regulator independent of the cam, and that is the same that we use for regulation of straight stitching.

[fol. 1386] Q. Could you make an arrowhead stitch on the 404 machine that was as dense as the one on the 401?

A. Yes.

Q. But it would be a little shorter arrowhead, is that it?

A. Yes.

Mr. Klots: That is the point, your Honor.

Q. And of course the arrowhead stitch is a decorative stitch and not a functional stitch, is it not?

A. Yes.

Q. Miss Hutton, when a customer comes into a Singer store, does the customer indicate that he or she is familiar with the various features of the Singer sewing machine?

Mr. Weinstein: Objection, your Honor.

Q. Or anyone else's machine?

Mr. Weinstein: Objection, your Honor. That is clearly hearsay.

The Court: I do not know. She may know from her own observation.

Mr. Weinstein: Well, if she wants to testify as to specific customers——

The Court: She can testify as to general observations. [fol. 1387] I do think, however, it would be better to reframe the question to inquire about it.

Q. From your experience, which I think you have already testified to, as to estimating customer demands and what the customer wants, what would you say as to whether a customer, when he comes into a Singer store, indicates that he is familiar with the various features of the Singer machine?

A. Very few of our customers are familiar with the features of the machines. For example, the greatest number of our sales are derived from customers coming into our stores to buy notions, parts, needles and sundry other items.

The Court: Assuming when you have a customer come in, a prospective machine customer, do most of your customers come in as comparison buyers or do they come in looking for a specific type of machine to be exhibited and demonstrated to them?

The Witness: There are very few that come in as comparison buyers who have been to other sewing machine shops.

The Court: By "comparison buyers" I do not mean a commercial comparison shopper.

The Witness: No, no.

[fol. 1388] The Court: I mean a housewife.

Does she come in with a definite idea or does she come in after canvassing the field?

The Witness: Very few come in after canvassing the field. A customer, if she is a direct machine customer, will want to see a single machine. She doesn't know the difference between one type and another.

Q. Did you ever know or hear of a customer in your experience coming into a store and asking specifically for a machine which changes the zigzag pattern by a dial or tuning knob?

A. No.

Mr. Weinstein: Objection, Your Honor.

The Court: She can testify as to what her experience has been, and you can cross-examine her on that.

Objection overruled.

Q. In your experience, Miss Hutton, do sewing machines sold in the United States compete with each other notwithstanding that they may have different features?

A. Yes.

Mr. Weinstein: Objection, your Honor.

The Court: That is a little broad. I will permit it but I do not know what it embraces in that sentence. It is kind [fol. 1389] of broad.

Mr. Weinstein: I do not know how the witness can answer that, your Honor. It is a little hard for us to determine what it means.

The Court: Yes, I think so too. We will let her answer stay in, but, frankly, I cannot give it too much weight.

Q. Did you understand the question to refer to household sewing machines?

A. Yes, I did.

* * * * * * *

[fol. 1390] Cross-examination.

By Mr. Weinstein:

Q. Miss Hutton, I direct your attention to the Singer 401, 403 and 404 machines. They are all part of what you call the Singer slant needle line?

A. No. I said the Singer slant needle series.

Q. Slant needle series. What do you mean by slant needle series?

A. They are machines with many common features and many common parts. The slant needle, of course, I believe is rather obvious in outward design.

Q. Do they all have the same angle on the needle?

A. Yes.

Q. I direct your attention to the 401 machine. It has this hinged door on the front of the machine which gives access to the needle mechanism, does it not?

A. I do not call it the needle mechanism. It is also a presser bar and needle bar.

Q. Is that also true of your 403 machine?

A. That it has a slant needle?

Q. No. That it has a hinged opening which gives access to that area.

A. Yes.

Q. Is that true of every one of your slant series?

A. Yes, so that I can demonstrate it.

[fol. 1391] Q. Is it true that every one of them has the same tension adjusting mechanism?

A. Yes.

Q. Is it true that the visibility, except for a few slight differences in the cabinets, is essentially identical? That you have the same visibility features with respect to looking at the needle in one machine as you do with the other two?

A. Yes.

Mr. Klots: I assume it is clear you are talking about the 401, 403 and 404.

Mr. Weinstein: That's right, Mr. Klots.

Q. Is it true that the bobbin case is identical in the sense that is has access through the front and is exactly the same part?

A. Yes.

Q. Is the basic gear drive the same?

A. Yes. I assume you mean the underneath motion.

Q. Yes.

A. There are many gears.

Q. Is it fair to say, Miss Hutton, that every one of these machines is identical to each other with respect to every

major feature of the machine except the needle mechanism? In other words, is every feature the same except in the 401 [fol. 1392] multi-cam feature, the 403 or replaceable cam feature and in the 404 the straight stitch and attachment feature?

The Witness: May I hear that question again?

(Question read.)

A. If you are speaking of features, yes—if we understand your term to mean the same thing.

Q. Let me direct your attention for a moment to the Singer 404 machine.

Mr. Weinstein: Let the record show that Miss Hutton is given Exhibit 141 and Exhibit 141A.

Q. Let us assume that a housewife is using the machine as a straight stitch machine, and she decides that she wishes to use it in order to put a zigzag stitch in the material. Would you describe for us step by step what she has to do in order to get a pattern out of this machine, using the zigzag attachment.

The Court: The witness has before her Exhibits 141 and 141A, and that is known as the straight type—319, is it?

The Witness: 404.

The Court: —404 machine, Singer.

A. We remove the presser foot screw; we place the attachment on the machine from the back (indicating), the fork [fol. 1393] arm fits over the needle clamp screw, and we tighten the thumbscrew (indicating).

The Court: Of the attachment.

A. This should be tightened with this screwdriver.

Q. You say that should be tightened with a screwdriver?

A. Yes.

Q. Does a screwdriver come with it?

A. It is part of the accessories.

Q. Then what do you do?

A. Place the cam in the machine.

The Court: Place the cam in the attachment which has been attached to the needle bar—yes.

Q. Do you swing open that hinge, that door over the cam mechanism?

A. Yes.

The Court: She has opened the door to the receptacle for the reception of the information of the replaceable cam, which is located on the attachment, and she has placed the cam in the receptacle and closed the door.

Q. Would you not have to select a cam from out of the box and examine it in order to determine what pattern is chosen, [fol. 1394] or in order to select a particular pattern?

A. Obviously.

Q. Then you are ready to start your machine up?

A. Yes.

Q. You then turn on the electric current and you are ready to make a zigzag pattern?

A. Yes.

Q. At this point, if you decide to go back to straight stitching, you would have to remove this mechanism, is that not true?

The Court: Remove the attachment mechanism.

Q. The attachment mechanism, 141A.

The Court: That's right.

A. No, the attachment will straight stitch a limited distance.

Q. A limited distance?

A. Yes.

Q. How long is that distance?

A. It will stitch as long as one wants to, but one would not do it simply because of the bulk of the attachment.

Q. I see. So, in other words——

A. One would not make a dress with a zigzag staying like that.

[fol. 1395] Q. A knowledgeable sewer——

A. Any sewer.

Q. —would remove it and take to straight stitching?

A. Yes.

Q. And then if she chose another pattern, she would have to go through the same procedure, on another piece of material perhaps and put another stitch on that material; is that correct?

A. Yes, but home sewers organize their work a little bit better.

Mr. Weinstein: I ask that that answer be stricken, your Honor.

The Court: No, it will stand. It is informative.

Q. You were asked on your direct testimony, I believe, by his Honor whether or not this mechanism worked equally well on materials of great thickness, and I believe you answered that it did to an extent—I mean within reasonable thickness of the material. Is that true also with respect to very thin material? Would she use——

The Court: Wait.

A. I lost you.

[fol. 1396] The Court: Give her a chance.

Let me understand this again. With this attachment the needle does not swing laterally?

The Witness: That's right.

The Court: But the material itself which is being sewed is swung laterally back and forth by the attachment?

The Witness: That's right.

The Court: And the pressure of the attachment on the material.

The Witness: Right.

The Court: Does the thinness of the material have any effect upon the efficiency of the operation of this attachment when it is thrown into zigzag sewing? That is what counsel meant to ask.

Mr. Weinstein: Thank you, your Honor.

The Witness: It is not making—this is comparative to anything else?

The Court: Suppose you give me that answer again.

The Witness: I mean, I am trying to clarify the question. I mean, do you want a comparative answer?

The Court: No. Counsel wants to know—and I would like to know—does the efficiency of this attachment on this [fol. 1397] straight stitch machine decrease as the material gets thinner to such a point that if the material is too thin, like a voile——

The Witness: Voile is thin and soft.

The Court: Yes.

The Witness: Softness has greater effect than thinness. This is true of any sewing operations.

The Court: And that is so with any machine.

The Witness: Yes, that is why I was interested in getting a comparison because we have limits with every home sewing machine.

Q. Let me rephrase that question.

Is it not true that using the zigzag attachment, there is a limitation imposed on this machine that would not be imposed upon the 403 and the 404 machine with respect to very thin or very soft material?

The Court: Better break that up—first "very thin material."

Q. Very thin material. I am concerned with the problem of puckering.

A. We are getting into areas that require refinement. Soft materials—all zigzag decorative stitching on soft materials is supported with something that is removed after the garment is finished.

[fol. 1398] The Court: A sort of stiffening material.

A. Where you have limitation with the zigzag attachment, in the sideway motion of the foot, you also have a limitation on all zigzag sewing machines of any kind, with the size of the needle hole underneath it, that the soft fabric will clog down into.

Q. Do I understand your testimony correctly to say that you have no limitation using a zigzag attachment which moves the material as opposed to the needle on any material?

A. I wouldn't say that of any sewing machine in the world.

Q. With respect to the other two Singer sewing machines.

A. I just said that we have a limitation here. We also have a limitation in the other—in any zigzag machine. The cause and effect is different, but it is still a limitation.

Q. Are the limitations identical?

A. They are not identical. They are different. They come from a different mechanical cause.

Q. Thank you. I think that answers the question.

Now let me direct your attention to the 401 machine and the 403 machine.

[fol. 1399] Is it not true that these two machines are identical except as to the difference which arises out of the different cam features?

A. It is not true.

Q. It is not true. Would you detail the differences other than the differences which go to the cam features.

A. If you are talking about features, that is one thing. If you are talking about mechanics, that's another.

Q. What does the 403 machine have or do that the 401 machine does not do?

A. You are talking about operations now?

Q. Yes. Aside from the zigzag pattern mechanism.

A. Nothing.

Q. Nothing.

A. Aside from the zigzag pattern mechanism.

Q. Yes. In other words, do you have any feature with respect to tension on the 403 machine——

A. No, it is exactly the same.

Q. It is exactly the same?

A. Yes.

Q. Aside from the zigzag pattern mechanism, is there anything that the 401 machine will do that the 403 machine [fol. 1400] will not do?

A. No.

Q. Is it not true that for all intents and purposes, aside from the difference as to the cams, these two machines are identical—cam mechanisms?

A. Yes.

Q. So that when a customer comes in to the Singer shop and makes a choice between the 403 machine and the 401 machine, their choice is based on the difference in the cam mechanism?

A. Providing the customer has had an opportunity to make a choice.

Q. Providing the customer has examined the machine and makes a sound choice——

A. Yes.

Q. —that should be the basis of the choice?

A. If the customer has examined both the 401 and the 403, the basis for choice can be more than feature; it can be price.

Q. It can be price?

A. Price is an element in any purchase.

Q. How much does the 401 machine sell for in a portable carrying case?

A. I am not qualified to quote prices because I am not [fol. 1401] constantly quoting them, and we make a practice of not quoting prices without reference to our price sheets.

The Court: All these machines are made in the same color pattern?

The Witness: Yes.

The Court: You do not vary one model in colors, do you?

The Witness: These machines have been in slightly different color combinations, during a transition. However, they are——

The Court: Suppose a lady comes in and she wants to buy the 401 in a black color——

The Witness: No, no.

The Court: She has to take this color?

The Witness: Yes.

The Court: She cannot buy these machines in different colors?

The Witness: No, there is not a color selection.

The Court: Like an automobile. All right.

Q. Does Singer have a one-price policy, do you know, with respect to these 401, 403 and 404 machines?

A. Yes.

Q. In other words, if a customer wants to purchase this [fol. 1402] machine at retail, she pays the same price no matter what shop she goes to?

A. Yes.

Q. You do not have a policy of bargaining on the machines?

Mr. Klots: I am not sure that the witness is qualified to answer.

The Witness: I do not know what he means.

The Court: He means, suppose I go into a store to buy a machine and I have a 1492 model that I want to trade in. Do you have a standard book that says a 1492 model shall be traded in for $20 and that is the standard price in every shop, or is there a little element of give-and-take on trade-ins?

The Witness: Trade-ins——

The Court: You do take trade-ins, don't you?

The Witness: Yes. The trade-ins are always appraised. There is a limitation within which the sales person must operate in his appraisal.

The Court: All right.

Q. Let us direct ourselves to a customer that comes in to buy a machine for cash without a trade-in. Do you know whether or not Singer has a firm price policy?

A. Yes, they do.

[fol. 1403] Q. They do. Thank you.

Now it has been stipulated, Miss Hutton, that the 401 machine in the carrying case—portable carrying case, retails for $340 and the 403 machine retails at $280, which is a difference of $60.

A. Yes.

Q. Assuming that a buyer comes into a store, Miss Hutton, and is to make a sound choice and is fairly shown the differences between these two machines by the Singer personnel, is it not true that that choice must be made solely on the difference in the cam mechanisms?

Mr. Klots: I thought that question was answered.

Mr. Elkins: It is not.

The Court: I think it is obvious that the choice is frequently influenced by—not only with older people but by younger people, if they are working people—how much they will spend for a machine. It is the working people that buy these machines. It is the people who have to cut their cloth according to their measure. That is the reason why they have these sewing machines, and they have so much to spend and they put so much aside for this budget.

Q. Aside from price, are not some customers that come [fol. 1404] into the Singer shops attracted, and in fact sold by the fact that you merely dial a stitch on this machine, on the 401 machine?

A. I wouldn't say so.

Q. In your experience, talking to Singer personnel and speaking to people in the advertising department, would you not say that that is the case?

A. I think Singer purchasers are sold because we have maximum facility with a minimum of effort on the part of the customer, with a minimum of complication.

Q. That is important to many shoppers, is it not?

A. Yes—simplicity.

The Court: It is important that the Singer Company has a reputation for service on its products?

The Witness: Oh, extremely important because——

Q. You get the same service irrespective of whether you buy the 401 or the 403 or the 404, is that not so?

A. Yes, you get the same service.

Q. Let me just clarify this one point once again, Miss Hutton. I am not sure that we understand each other exactly right.

The difference between the 401 machine, which is the [fol. 1405] machine-carried multiple-cam machine, and the 403 machine, which is the replaceable cam machine, resides in a single feature of their having different cam mechanisms?

Mr. Klots: I thought he asked that question a few times.

The Court: He already has, but let her answer it again. This is cross-examination. The witness will give the same answer.

A. Yes, sir.

[fol. 1406] Mr. Klots: I assume he is talking about the physical features and not the price features of it.

Mr. Weinstein: I am talking about the physical features, Mr. Klots, yes.

By Mr. Weinstein:

Q. Miss Hutton, I show you this and ask you if you can identify it?

A. Yes.

Q. Can you identify it?

A. Yes.

Q. Have you seen it before?

A. Yes.

Mr. Weinstein: I ask that it be marked for identification.

The Court: What is it? Why don't you offer it in evidence?

Mr. Weinstein: I will, your Honor.

The Court: Offer it in evidence right away and save time, if you think it is material and if there will be no objection.

Mr. Klots: I have no objection. I have a copy.

The Court: Received.

[fol. 1407] (Received in evidence as Government Exhibit 200.)

The Court: Let the witness tell us what this paper is. What is this paper that has just been marked in evidence?

The Witness: This is national advertising that appeared in six magazines during the spring of 1959.

The Court: This is a reproduction of a Singer ad that is nationally advertised. All right.

By Mr. Weinstein:

Q. Was this advertisement shown to you prior to its being placed in these magazines?

A. Undoubtedly.

Q. This advertisement reads with respect to the 401: "Famous Slant-o-Matic . . . finest fully automatic sewing machine you can own. Lets you create thousands of decorative stitches, just by 'tuning' a knob. Also mending, buttonholing . . . even button sewing!" That is true. Doesn't that accurately describe the 401 machine?

A. Yes.

Q. Under the 403 machine, which is described as a sister to this 401 machine, it says: ". . . brilliant automatic machine. Has many features of the Slant-o-Matic, at a lower price. Simplified threading, handy 'drop-in' bobbin [fol. 1408] in front of the needle, fine, smooth straight-stitching." That is equally true of the 401 machine, is it not?

A. Yes.

Q. Then it says: "Comes with a set of Fashion Discs for fancy stitching, too. Just slip a disc onto the machine. Presto! You're decorating linens, curtains—things for the family." Does it not?

A. Yes.

Q. When does this advertisement appear in the six magazines that you mentioned?

The Court: You have the dates down at the bottom. Don't you see them?

Mr. Weinstein: Yes.

The Court: It is pretty expensive advertising, too, in those magazines. They are high priced magazines for advertising.

Mr. Weinstein: I am sure that is true, your Honor.

I will want to read one more line.

The Court: Apparently this was a double page spread. Was it?

The Witness: Yes.

The Court: Quite expensive.

[fol. 1409] By Mr. Weinstein:

Q. Singer has devoted certainly more than twice as much space to their 401 machine in this ad, have they not, Miss Hutton?

A. Yes.

Q. Would you not say there are a group of customers who have a specific interest and specific desire to buy the most fully automatic machine that Singer produces?

A. That's what we try to cultivate.

The Court: I see you have at the bottom here, on the right, the line "Choose the one that suits your budget and sewing needs."

The Witness: Yes.

The Court: Do you know whether this was intended to appeal, this ad, to various budget buyers, people who had a definite amount of money to spend?

The Witness: This would not be directed to any particular income group, because, if we look at the magazines in which it appeared, it covers the field. I mean, we go from the Progressive Farmer into Farm Journal and Successful Farming, True Story, Parents. I am sure the circulation of these [fol. 1410] magazines is slightly different from Look and Life and Ladies' Home Journal.

The Court: It used to be. I wouldn't testify to it today. I think you will find Life in many a farmhouse.

The Witness: Oh, I am sure of that.

The Court: And Look, today.

The Witness: Yes.

The Court: Is the most expensive machine this large one, the 401?

The Witness: Yes.

The Court: And that has almost half of the advertisement, the most expensive machine?

The Witness: Yes, yes.

The Court: That was the lead item, the lead price.
The Witness: Yes. That is commercial advertising.

By Mr. Weinstein:

Q. Is it not true that your 404 machine sells for approximately $189.50 or $190?
A. It is within that range. I would not want to be held to accurate pricing.

Mr. Klots: Did counsel say the 404 was a manual machine?
[fol. 1411] Mr. Weinstein: A straight stitch machine. I am sorry.
Mr. Klots: With a zigzag attachment.
Mr. Weinstein: Yes.

By Mr. Weinstein:

Q. Then, if the 403 sells for approximately $280, the purchaser of the 403 machine is willing to spend at least $90 more for the feature of being able to just replace the cams in the machine as opposed to using this zigzag attachment on the 404; is that not true?
A. Yes.
Q. And if he buys the 401, he is willing to spend $150 more as opposed to the 404 for that convenience of being able to merely dial a stitch?
A. There is a mathematical stepup. I am not going along with your computations.

The Court: Commercial marketing doesn't bear out the statement, from practical experience.
Mr. Weinstein: Your Honor, we merely wish to show——
The Court: It sometimes depends on the shop in which it is sold. A woman may go into a shop on 57th Street and ofttimes pay three times what she would pay for the same [fol. 1412] garment up in a store on the Concourse, called Alexanders, without the label.

Q. If a person comes in the Singer shop, can she not look at the 401, the 403 and the 404 at the same time and compare them feature for feature?
A. She can, if she so wishes.

Q. And will not the sales personnel help her to compare them feature for feature?

A. Oh, yes.

Q. So that, if a woman makes that choice——

A. If she makes that choice, we are glad to give her the opportunity.

Q. There are a number of people who come into Singer shops who want only a straight stitch machine; is that not true?

Mr. Klots: I am sorry. May I have the question? I did not hear it.

The Court: There are a number of people who come into Singer shops who only want straight stitch machines; is that not so?

A. Women do not specify exactly what they want when they come in.

Q. Didn't you testify on direct examination that 90 per cent of the use of a sewing machine is directed to straight [fol. 1413] stitching?

A. Absolutely.

Q. So, is it not fair to assume, and from your experience can you not assume, that some women buy machines solely for straight stitching?

A. Yes.

Q. Do you sell a straight stitch machine which does not have a zigzag attachment?

A. Yes.

Q. So, certainly, those women at least do not care about zigzag patterns.

A. There is a difference in what they buy and what they ask for, however. Women are inquisitive. They like to see more than a single selection.

Q. So they generally scan the whole panorama of machines that you have?

A. They allow us to demonstrate.

Q. And you do so demonstrate?

A. Yes.

Q. There are some women, are there not, who wish the replaceable cam machine and do not wish to spend the additional money to get the 401 machine? When I speak of the replaceable cam, I speak of the 403 machine.

A. This is very difficult for me to follow in that women [fol. 1414] are not conscious of the mechanics. They are conscious of the application. They want the machine that does things. They don't care how they get around doing it. They don't understand the mechanism.

Q. Are they not conscious of the operational differences between these two machines?

A. They are aware—if a woman is shopping and looking at both machines, she certainly is aware that you dial or the difference between dialing and removing a cam.

Q. Isn't that the sole basis upon which you can expect a woman to pay $60 more for a machine?

A. No, it is not.

Q. What other bases are there?

A. Because some people think this is easier.

Q. Some people think this is easier?

A. Yes.

Q. Do some people think that the 401 is easier?

A. Yes.

Q. So there are certain people who buy the 401 machine because they are interested in having the feature of ease, is that not true?

A. They interpret that feature as being easy for them.

[fol. 1415] Q. Do you not so advertise it as being easiest?

A. Yes.

Q. It has been stipulated, Miss Hutton, that in 1959 155,000-some odd purchasers purchased the 401 machine and 50,000-some odd purchasers purchased the 403 machine.

A. In what year?

Q. 1959.

Mr. Klots: May we have the paragraph of the stipulation?

Mr. Weinstein: That is paragraph 88, Mr. Klots.

Q. Don't you think it is fair to assume that when approximately three times as many women spend $60 more to buy what you advertise to be the most fully automatic machine that they are buying it conscious of the fact that they are getting one principal feature, the feature of ease of dialing the stitch?

A. Volume of sales is dependent very closely on the amount of promotion and how machines are promoted.

Q. Didn't you say the price was a substantial factor?

A. Is a substantial factor.

Q. Here we have a situation, do we not, where many, many [fol. 1416] more women are paying more money to buy the 401 machine? You attribute this solely to advertising? Is that what you wish us to believe?

A. I said promotion, which is much more than advertising. It is a matter of demonstration, with a personal demonstration to the consumer, the selling efforts in total.

Q. Then you are in fact able to demonstrate to the consumer that this is an easier machine to use, are you not?

A. I don't follow you. I am sorry.

Q. You say it is a matter of demonstration of the machine in order to cause a hundred thousand people——

A. I did not say that. I said the volume of sales——

The Court: Why don't you break up the question. Sales psychology—I don't think this lady, as smart as she is, is qualified as an expert in that, and may I suggest that I don't think you are either, nor am I, although I may, with my conceit, think I am.

Mr. Weinstein: I was just suggesting, your Honor, that it was a natural inference, knowing women to be careful shoppers, as I do.

The Court: It is not a natural inference. Common experi- [fol. 1417] ence tells us that P. T. Barnum could make a fortune selling the Brooklyn Bridge. That is salesmanship, promotion.

Mr. Weinstein: Your Honor, I doubt that P. T. Barnum ever had the opportunity of demonstrating three bridges simultaneously and causing someone to make a conscious choice.

The Court: He had an awful lot of opportunities, including presenting opera singers.

By Mr. Weinstein:

Q. May I conclude the subject, Miss Hutton, by saying: You do agree that the 401 machine sells for $60 more than the 403 machine, do you not?

The Court: Whether she agrees with that or not, it is so stipulated. There is no dispute about that.

Q. You do agree that the 401 and the 403 differ only in that they have different cam mechanisms.

A. Yes.

Q. Just one further point. Can a consumer, owning a 401 machine, use it without ever replacing a cam, if he so chooses, and get numerous patterns, many in excess of one or two or three?

A. Yes.

Q. In other words, if that machine comes with seven metal [fol. 1418] cams and one fashion disc on top of those metal cams, she can leave that disc in there and never touch it and get at least, did you testify, 22 patterns?

A. Yes, and that is especially true if she limits her sewing to the functional zigzag sewing.

Q. And how many discs would she have to put in and out of the 403 machine in order to get 22 patterns?

A. To get 22 patterns?

Q. Yes.

A. 22 discs.

Q. How many discs come with the machine?

A. There is one on it, eight with it, and they total 22.

Q. If she purchases extra discs, is that not correct?

A. Yes.

Q. So there is one on it and eight with it, so she only gets nine?

A. Yes.

Q. So, if a woman buys the machine as it comes with standard equipment, she can only make nine patterns on it and then only by replacing the discs each time?

A. Yes.

[fol. 1419] Q. I show you this. Can you identify it?

A. Yes.

Q. What is it?

A. A 401 instruction book included in the attachments sent with the 401 machine.

Mr. Weinstein: I offer it in evidence, your Honor.

Mr. Klots: No objection.

The Court: Received in evidence.

(Received in evidence as Government's Exhibit 201.)

Mr. Weinstein: Do you know whether or not the instruction book for the 403 machine is in evidence?

Mr. Klots: One of them is. I don't know which.

(Discussion off the record.)

By Mr. Weinstein:

Q. I show you Defendant's Exhibit 139 and Government's Exhibit 201, which are, respectively, the instruction books going with the 403 machine and the 401 machine, Singer's. Would you examine them and tell me whether or not they are identical in most respects except as to those areas covering the cam mechanism?

[fol. 1420] A. I don't have to examine them. They are.

Q. Thank you. Let me direct your attention to the 401 book, which is Government's Exhibit 201, and ask you to examine pages A through P.

A. That is the color section.

Q. What do these pages relate to?

A. They relate to different things. Page A relates to two needle stitching.

Q. And page B?

A. Page B relates to two needle stitching, as does C. D relates to borders that are made from combinations of various stitches. F, G, H, I and J relate to motifs made by using a variety of different stitches. Some are monograms and some are designs. L, M and N are applique. I skipped K. K is a freehand embroidery.

Q. I don't think you have to go any further. Can all of these things be done with the 401 machine?

A. It is in the 401 book. Yes.

Q. Can every one of these things be done with the 403 machine?

A. I will have to check it. Anything on A, B, C, D and E could be done, providing there is a cam——

The Court: In fact, the plates that you have just desig-

[fol. 1421] nated, the pictorial plates, are the same.

The Witness: I have the 401 and you have the 401. We don't have any color section in the 403.

The Court: You just have the black and white stitching.

The Witness: Yes. There are certain of these patterns that a cam has not been made for the 403 to duplicate its stitching. A cam could be made for any of these stitchings.

By Mr. Weinstein:

Q. Do some of these stitchings become possible because you combine the action from two cams simultaneously?

A. Yes.

Q. That feature is only found in the 401 machine, is that not true, as opposed to the 403 and the 404 machines?

A. Yes. But, where that particular stitch becomes important to the consumer, a cam could be made.

Q. Is everything that you can get by combining cams with the 401 machine presently available to the purchaser of a 403 machine?

A. No, it is not.

Q. How about the purchaser of a 404 machine?

[fol. 1422] A. No.

Q. Looking at these pages, wouldn't you say that some of these that you can accomplish with the 401 machine are amazing?

A. No, they are not amazing.

Q. Not amazing? You don't think it has any degree of spectacularness to it?

The Court: Not to one as experienced as she. This lady is experienced. What would be amazing to you or to me is no longer amazing to her because the novelty has been worn off by the dullness of business and commercial activities.

• • • • • • •

Q. Did you say that you helped Mr. Johnson develop the 401 machine?

A. I did not say I helped him, because I am not an engineer. I said he consulted with me.

Q. On what matters did he consult you about? Can you give us some examples?

[fol. 1423] A. Matters of customer usage and application of the mechanical to the general field of home sewing, which, again, is usage.

Q. Do you remember approximately when he consulted you?

A. Well, I started working with Mr. Johnson in about 1951 or 1952, and it was almost immediately after I started working with him that the 401, which was known as the 282 at the time, was being developed.

Q. The 403 machine. Were you consulted concerning the development of that machine?

A. Yes.

Q. And the 404 machine. Were you consulted concerning the development of that machine?

A. Yes. However, the other two to a lesser degree because the concept had been established.

Q. Were any specific suggestions that you made to Mr. Johnson incorporated in the 401 machine?

A. Oh, yes.

Q. Can you name a few of them?

The Court: What is the purpose of this? Do you attack the validity of the patent as not being Johnson's invention?

Mr. Weinstein: No, your Honor. We just wish to show [fol. 1424] that Miss Hutton has a connection with what the consumer wants and that, if these features go into a machine, they are probably there because people in Singer considered them important, and I think this applies fully well to the cam mechanisms.

The Court: I suppose Johnson considered the practical applicability of anything he wanted to put into operation and apply in his device. Frequently in development this happens.

Mr. Weinstein: I am willing to drop that line of questioning.

The Court: All right.

By Mr. Weinstein:

Q. When did you first see the Necchi machine you described this morning?

A. Do you mean this particular machine or a Necchi Supernova machine?

Q. A machine that is, although not the same, identical in features to the one you testified about this morning.

A. It would be very hard for me to fix a date. I saw them shortly after they were sold on our U.S. market.

Q. You cannot fix that date?

A. I cannot fix the date, no. I don't remember that, be- [fol. 1424a] cause I go to Necchi stores occasionally. It must go back four years at least.

[fol. 1425] Q. I direct your attention to Defendant's Exhibit 149 in evidence, a Vigorelli machine, and ask you when you first saw this machine.

A. I first saw the Vigorelli machine quite some months ago.

Q. Can you fix the date for us approximately?

A. I could fix it if I have an opportunity to refer to some correspondence.

I do not have it here. It is very hard for me to remember the date unless I see something.

Q. Do you remember the subject matter of the correspondence? Did you write a letter——

A. I think I wrote a report on this machine at one time.

Q. What was the purpose of the report? Were you shopping a competitor's machine?

A. No. The purpose of the report was to—it is in line with what we do frequently. We are given competitive machines and asked to evaluate them in terms of customer usage and customer acceptance. We do exactly the same with our own sewing machines.

Q. In other words, you were trying to determine how competitive this machine was with the Singer machine?

A. Yes.

[fol. 1426] Q. At the time that you wrote that report?

A. How competitive it would be, how great an interest it would be to the consumer, which I presume could be interpreted as being competitive.

Q. This Vigorelli machine also controls the feed of the cloth through the machine, does it not, in addition to its other features?

A. You mean by cam?

Q. By cam, yes.

A. Yes.

Q. How many Vigorelli machines have you seen in this country that perform that function, I mean other than this particular style? I don't mean have you seen a dozen of these machines; I mean have you seen other designs of a Vigorelli machine that perform that same function?

A. I don't believe I have.

Q. So to the best of your——

A. I can't recall if I have.

Q. So to the best of your recollection this is the only Vigorelli machine you have seen that has cam means for controlling the feed?

A. Yes.

Q. Did you ever see a prototype of this machine?

[fol. 1427] Mr. Klots: What do you mean by prototype?

Mr. Weinstein: Perhaps a model with not all the casing elements on it.

Mr. Klots: Made by Vigorelli, you mean?

Mr. Weinstein: Yes.

A. I saw a machine of this type that looked very much the same as this. The only difference I can recall is in the cams themselves. I believe they were of a brownish color and these are definitely molded and are black. Whether it was a prototype or not, I don't know.

* * * * * * *

[fol. 1428] IN UNITED STATES DISTRICT COURT

UNITED STATES OF AMERICA

vs.

THE SINGER MANUFACTURING CO.

New York, June 2, 1961, 1.30 o'clock p.m.

Trial resumed

OFFERS OF PROOF

Mr. Pettit: Your Honor, I have a witness whose testimony will take approximately five minutes, and I would like to put him on the stand now because he will be leaving today for a two-week sailing trip.

The Court: Do you have any objection, Mr. Elkins?

Mr. Elkins: Who is the witness and what will he be testifying about?

(Discussion off the record.)

Mr. Elkins: If your Honor please, the subject of the testimony as set forth in the instrument which opposing counsel has shown me has to do with the hourly wages in Japan of employees working in Japan in a plant which is, I believe, partly owned by Singer. It is completely irrelevant. I suggest that the man go on his sailing trip without taking the five minutes to testify. I cannot possibly conceive of any relevancy——

The Court: If he is only going to testify for five minutes, [fol. 1429] let's have his testimony on the record. I agree

with you that it is irrelevant and immaterial and I will strike it from the record, but I would like it in the record in case somebody else might differ with me.

I don't see how it is at all material how much workmen get. If you want to put in an offer of proof, I will permit you to do it if there is no objection by counsel, and then on his motion I will strike it and exclude it.

I think that would be the better way. Do you agree, Mr. Elkins?

Mr. Elkins: This is an offer of proof, and I would gather, then, that it will not be in evidence?

The Court: No, it is not in evidence.

Mr. Elkins: It will be excluded as evidence, as I understand it?

The Court: Yes. I will not take it, but I want Mr. Pettit to have the opportunity of placing this in the record in some way. This perhaps seems to be the best and the quickest way. All right.

Mr. Pettit: Your Honor, I just wanted to add that I had intended to supplement this with similar wage rates in the United States.

[fol. 1430] The Court: Suppose we start first with this offer of proof.

Mr. Pettit: I will offer——

The Court: You offer to call a witness.

Mr. Pettit: —to call a witness, Robert S. Peets, Administrator of Far East factories of The Singer Manufacturing Company, to testify that the average straight time hourly earnings as of March 1961 and the average hourly fringe benefit cost for the period April 1960 through March 1961 inclusive of all employees of the Pine Sewing Machine Manufacturing Company at its factory in Utsonomiya, Japan, excluding clerical, engineering and supervisory personnel, is as follows, respectively:

Average hourly earnings	$.262
Average hourly fringe benefit cost	$.207
Total per hour	$.469

The Court: That is $4 a day, inclusive.

Mr. Pettit: Well, yes, when you put the point in front of it you have said dollars. But it is .469, is the total, and it is

all embodied in this statement that I would propose to introduce.

The Court: No, I don't want the statement.

[fol. 1431] You offer to prove this by this witness, Mr. Peets.

Mr. Pettit: Yes.

The Court: And the Government objects to it on the ground of it being irrelevant, immaterial and in no way involved in this suit.

Mr. Elkins: That's right, your Honor.

The Court: Your offer of proof is stated on the record. I refuse to accept this proof. I agree with the government that it is irrelevant and immaterial. You have an exception to my ruling.

Mr. Pettit: Thank you, sir.

Now I would like to do the same thing with another offer of proof. I would like to offer to prove by Mr. John Q. Jennings, who is in the Labor Relations Department of The Singer Manufacturing Company, that the average straight time hourly earnings as of December 1960 and the average hourly fringe benefit costs for the year 1960 of all Singer employees at its factory in Elizabethport, New Jersey, excluding in each instance apprentices, learners, clerks, engineers and supervisory personnel, are as follows, respectively:

[fol. 1432]

Average hourly earnings	$2.561
Average fringe benefit cost	.867
Total per hour	$3.428

The Court: The government objects to it?

Mr. Elkins: We object for the same reason.

The Court: To this specific evidence?

Mr. Elkins: Yes.

The Court: You object on the ground it is irrelevant and immaterial?

Mr. Elkins: That's right, your Honor.

The Court: I agree with the government.

I refuse to accept this proof, and I don't think it is material or relevant to the issues that are presented by this suit, and you have an exception to my ruling.

Mr. Pettit: I offered it on the thought that it relates to the reasonableness of the conduct in what Singer is doing to meet the competition that it has, and it shows the fight that it is in, what it has to do to protect itself.

The Court: I suppose that in many fields of business activities an American manufacturer, an American businessman, is confronted with similar and identical problems. That, however, is not involved in this case.

[fol. 1433] Mr. Pettit: Unless it is involved in the element of reasonableness in acquiring the patent. We have a very peculiar situation here.

The Court: The acquisition of the patent is not attacked on the basis of its reasonableness. It is attacked on the basis of its unlawful acquisition, that it was acquired for an unlawful purpose.

As I understand the government's contention, it is in substance that although an American manufacturer may acquire another patent from another owner, that is a lawful act; still, a lawful act may not be used to accomplish an unlawful purpose. It is the purpose of the acquisition that the government attacks in this suit.

Do I correctly, in substance, state the government's position?

[fol. 1434] Mr. Elkins: Yes, your Honor.

Mr. Pettit: Then I understand they are not claiming that the acquisition is unreasonable—on the grounds of unreasonableness.

The Court: That is a little too broad, because "unreasonableness" is a term of art which perhaps might not be correctly understood. The theory of the government's case is that the law was violated with respect to the acquisition of these patents in that the acquisition was an act done for the accomplishment of an unlawful purpose. You may have a violation of the law, as I pointed out to you, I think, early in the trial, from the commission of a lawful act if it is done in pursuance of an unlawful purpose or unlawful conspiracy. That in itself would make the act, even though innocent of itself, and lawful of itself, a violation of the law because of the purpose.

Mr. Pettit: All right, I hope that that is their position, then.

The Court: I think Mr. Elkins has stated that only three minutes ago—and if there is any doubt remaining in your mind, I have no doubt that he will state his again.

[fol. 1435] Will you accommodate Mr. Pettit?

Mr. Elkins: Yes, your Honor. We allege that there was a conspiracy between Singer and Gegauf; that the principal phase of that conspiracy was that Singer would acquire from Gegauf Gegauf's United States patent applications; that the purpose of the conspiracy was that those patents when ultimately issued would be used by Singer in conjunction with its own patents in order to exclude the Japanese.

We also allege that Singer in acquiring the two Gegauf United States patent applications did so in an attempt to monopolize trade and commerce in the United States in the built-in machine carried multi-cam machines.

I make it thorough, your Honor, because I do not want opposing counsel to have any misunderstanding.

The Court: You make it thorough but not explicit enough.

You do not attack the acquisition of these patents standing in and of themselves as being an unlawful act per se, as I understand the government's position. You say that they become unlawful and the acquisitions become unlawful because of the purpose for which they were acquired.

[fol. 1436] Mr. Elkins: That is so, your Honor.

The Court: All right, then we will proceed.

Mr. Elkins: I wonder if I could answer it this way, if I say that the acquisition of a patent in and of itself is a normal, ordinary procedure. We say because of the circumstances and the purposes and the intent of the parties here it was unlawful.

• • • • • • •

JESSIE HUTTON resumed.

Cross-examination continued.

By Mr. Weinstein:

Q. Miss Hutton, I want to clear up just a few ambiguities that appeared in your testimony yesterday.

You testified yesterday that to the best of your recollec-

tion, or your estimate was that 90 per cent of sewing was straight stitch sewing, is that correct?

A. It is not. I prefer to have my original testimony read back.

Mr. Klots: I have it right here (indicating).

A. (Continuing) I don't mean yesterday. I mean the original, where I testified 90 per cent was.

[fol. 1437] The Court: She said that 90 per cent of the women or purchasers of the machine were interested primarily in straight stitch sewing.

Mr. Klots: Page 1326.

Q. Did you testify yesterday from your memory, Miss Hutton?

The Court: The witness did not have any papers before her, so it must have been memory. I observed as she testified that there were no documents before her which she used to refresh her recollection, as she testified.

Q. How would you answer this question:

"Q. Now to what extent does the ornamental zigzag stitch play a role in the fabricating of cloth by American house wives?"

A. I answered that once before in the original testimony, and that is what I asked to have read back.

Q. And the answer you gave at that time was "It is a very small percentage. In fact, we base our judgments on 90 per cent of all home sewing is straight stitching."

A. Right.

Q. Is this still your answer?

A. We base our judgments on that.

[fol. 1438] Q. Yes.

A. And these judgments refer back to the judgments that we were sharing with the engineers, as I recall.

* * * * * * *

Q. Your answer to the next question was: "The amount [fol. 1439] remaining, 10 per cent, is zigzagging and of that, 5 per cent is decorative."

A. I meant half of that—5 percent of the whole—not half of the 10 per cent.

Q. That is all I want to know. You distinguished yesterday between the two terms "ease" and "effectiveness" when describing the production of stitches on the Singer machines.

Would you define what you mean by "equal ease" and "equal effectiveness"?

A. My use of the term "ease" relates to the customer, the user. I mean it is easy for her to do. It is easy for her to remember. It is easy for her to accomplish.

"Effectiveness" I used in terms of relating to when the stitch was done, is it effective in the garment, in the operation, in use.

Q. Does "ease" relate more to the person using the machine, and "effectiveness" relate to the machine?

A. No, the effectiveness relates to the stitch in the fabric.

The Court: The result.

The Witness: Yes.

The Court: By "effectiveness" you mean the net result of [fol. 1440] the operation?

The Witness: Yes.

The Court: And by "ease" do you mean the facility with which the result could be produced by the operator on a given machine?

The Witness: Yes.

Q. I put before you, Miss Hutton, Defendant's Exhibit 143, which are the stitches which were made on the Pfaff 259 manual zigzag machine; Exhibit 106-C, which was made on the 401 multi-cam machine; Exhibit 116-C, the zigzag stitches which were made on the 403 replaceable cam machine, and Exhibit 141-C, which were the zigzag stitches made on the 404 straight stitch machine with the zigzag attachment.

I ask you to examine them and tell me whether or not the stitches on each of these correspond with the stitches on the other three or are intended to correspond?

A. They are intended to correspond for practical purposes. They are not intended to correspond in the respect that they would be used on the same garment and would be viewed to be absoluteely impossible to interpret any difference.

The same thing is true of the lines of stitching made on [fol. 1441] two different sewing machines of the same class, and with entirely the same facility because you have tension setting, you have many things that are not related to some of the essentials that we are discussing today. In fact, we use the terminology "each machine has its own personality". That means each individual machine.

The Court: By that you mean——

The Witness: I mean, if you carry that to its extreme.

The Court: That the construction of the machine itself, the mechanism will produce some minor variations in work product.

The Witness: Yes.

The Court: Because the personality of the operator——

The Witness: That is right.

The Court: —will produce some variation.

The Witness: Humidity will, too.

The Court: Humidity affects the cloth?

The Witness: Yes, if you are carrying this to the ultimate.

[fol. 1442] Q. My question was, when you made these stitches did you intend that as closely as possible the lines of one should correspond to the lines of the other three?

A. Yes.

Q. Do you agree with this statement: that to be entirely successful in operating a straight stitch machine with a zigzag attachment, the housewife had to have a sort of built-in timer so that she would zig when she was supposed to and zag when she was supposed to to keep the pattern uniform?

A. No, there is no—this is with the zigzag attachment?

Q. That's right.

A. The only thing the operator could do that would interfere with the conformation of the stitch would be to hold her material too tightly, to place a drag on it, to interrupt the feeding of the fabric.

Q. Would that statement be true as to the manual zigzag machine?

A. It is true only in the fabric-shifting device in that particular context, which would make it true only of a zigzag attachment.

Q. I do not think you have answered my question. My question is this: Do you say—and I am using loose term-[fol. 1443] inology—that in order for a housewife using a manual zigzag machine to perform ornamental zigzag stitching, she has to have a built-in timer and zig when she is supposed to and zag when she is supposed to? In other words, that she has to count to herself where the timing is very crucial in her producing stitches.

A. The timing would best be regulated in harmony with the speed of the machine.

Q. Do you agree with the statement: that to be entirely successful she has to have a built-in timer so that she would zig when she was supposed to and zag when she was supposed to, to keep the pattern uniform?

A. That in reference to a——

Q. Manual machine.

A. —manual zigzag machine?

Q. Yes.

A. It depends entirely on what you mean by zigging and zagging, because if you can interpret motion of levers as zigging and zagging, that statement is correct.

Q. You think that statement is correct, giving it that interpretation—the interpretation you just placed upon it?

A. I think it is a little bit harsh to say she would have to have a built-in timer. I think the idea—the attempt is to [fol. 1444] convey an idea that there must be—the motion must be synchronized—the motion of the movement of levers must be synchronized. I think the built-in timer phrase is a colloquialism that you interpret in meaning as you will.

Q. Isn't it a pretty close approximation to the truth, though?

A. No, I wouldn't say so.

Q. You wouldn't say so?

A. There again you are getting into ability, and you are getting into the customer interest and desire, and what she personally can do.

Q. I am concerned with the average housewife using a manual zigzag sewing machine. Doesn't she have some problem that she does not have when she uses——

A. Oh, absolutely.

Q. —when she uses a multi-cam machine, for instance, with built-in cams?

A. Yes.

Q. Let me direct your attention to Defendant's Exhibit 143, the design made on the Pfaff manual machine. Let me ask you to examine the second line from the bottom and tell me whether or not that blind stitch has its peaks uniform throughout.

[fol. 1445] A. Yes.

Q. It does?

A. Pretty—well, do you mean uniformly spaced or——

Q. Uniform in height.

A. In height there is a variation.

Q. How many of those peaks would you say—and to your eye can be seen as not to be the same height as the majority of them? Would you count them for me?

A. There is one (indicating); there is one slightly—five, I would say.

Q. Five. How many peaks are there altogether in that line? Would you mind counting them for me.

A. Thirty-five and a half.

Q. So out of thirty-five and a half, at least five, to your eye, are not identical with the majority of the stitches?

A. Yes.

Q. Now I direct your attention to Exhibit 106C, the pattern made on the 401 machine. Looking at that same comparable line of stitches, the second from the bottom, how many of those would you say are not of the same height as the majority?

A. They are all the same height.

[fol. 1446] Q. All the same height?

A. Yes.

Q. And there are approximately the same number of stitches on that line as there are in Exhibit 143?

A. Approximately, yes.

Q. Looking at Exhibit 116C, again directing your attention to the second line from the bottom of the blind stitches, how many of those stitches are not of the same height?

A. They are all of the same height.

Q. All of the same height?

A. Yes.

Q. And again are there approximately the same number of stitches on that line as on the other two exhibits?

A. Yes.

Q. Directing your attention to Exhibit 141C, again the second line from the bottom, does that line look similar to the three other lines in the sense that each has a triangular point?

A. Yes.

Q. It does. You say that you can see no difference between these——

A. I did not say that. I said it looked similar.

[fol. 1447] Q. Looked similar.

A. I can give you the reason why it was designed like that.

Q. Please answer my question.

A. It is similar. It is similar in function. It is similar in use. It is not similar when used decorative because it appears more as a scallop.

Q. And these appear more as a triangular?

A. Yes, but this is a functional stitch.

Q. Is not a blind stitch a functional stitch?

A. All stitches we are talking about are blind stitches.

The Court: What do you mean by a blind stitch?

The Witness: Its major usage is for blind stitch hems, where the stitch does not go through, as we normally think of a sewing machine lock stitch does—trailing a thread on one side and on the other—this knits the fold of the garment on the hemline, so it gives the appearance of a hem stitch.

The Court: It is not a continuous straight line machine stitch?

The Witness: Yes. Since it——

The Court: Sort of imitation hand stitching that you see [fol. 1448] on the hem of many garments?

The Witness: That is right—the speed with which it is done is the greatest asset.

The Court: Is it also the design appearance that you prefer to see this broken line of stitches?

The Witness: Yes, when related to the simple lock stitch machine—the appearance of a blind stitch hem is better related to the hand hemming, which is not as good.

The Court: It is not as good as hand hemming?

The Witness: No.

The Court: But it gives a better appearance to many women?

The Witness: Than a machine one.

The Court: To men, too.

Q. Am I correct in saying that with the Singer attachment for this straight stitch machine you cannot achieve the triangular line stitch similar to the ones you got on the 401, the 403 and on the Pfaff 259 machine?

A. We maintain this is similar. If you want an exact—we do not make a cam for that exact stitch. We could make a cam for that exact stitch. This is no reason why there could not be a cam, but we chose to make the cam with the radius for reasons of application, use and operation.

[fol. 1449] Q. You mean when a woman has a straight stitch machine with a zigzag attachment, she uses it for different purposes than a woman that has a 403 machine or a 401 machine?

A. If you will permit me to explain I will clarify it.

Q. Please do.

A. We know that the zigzag attachment is a fabric shifting attachment.

Q. Yes.

A. Therefore the requirements under which the material are handled are a bit different than on the machine where the needle swings. For the blind stitch function, testing proved that a stitch with the conformity of the rounded edge worked more efficiently than one with the squared off blind stitching. This is the blind stitch for the zigzag attachment. This functions well.

Q. Is it not true, then, that when you are using a straight stitch machine with a zigzag attachment, there is a limitation in that the usua. blind stitch machine found on the other Singer zigzag machines is not as efficient when used with a zigzag attachment? Is that question clear to you?

[fol. 1450] A. No.

The Court: I cannot understand it. Suppose you break it up and make it shorter.

Q. You use a pointed stitch on the 401 and the 403, a triangular point.

You use a scallop on the 404 when you use a zigzag attachment, and you say that tests prove that this triangular stitch was not as efficient when used with a zigzag attachment. Is that true?

A. I said it was not as efficient as the stitch with the rounded contour.

Q. So that you have a different requirement when you are using a straight stitch machine with a zigzag attachment than when you are using a multi-cam machine; is that not true?

A. May I ask, in what respect?

Q. In that the stitches that prove efficient and useful in the 403 or the 401 do not prove as efficient or as useful in the 404?

A. I don't think I understand—I don't think our minds are meeting because I have stated this, the blind stitch, as shown here with the rounded edge, was designed thusly to make it efficient in blind stitch, to make the attachment on a [fol. 1451] straight stitch machine efficient in blind stitching. The purpose of this stitch all the way through is functional; primarily blind stitching.

This is not a stitch that is seen when the garment is worn —even when the stitch is used as a seam finish, it is not seen on the outward garment.

It is my opinion that the customer couldn't care less whether it is exactly the same stitch that was going into the garment, since the stitch loses its identity in use.

Q. What I want to know is, isn't there something unique, special about a zigzag attachment when used with a straight stitch machine which required Singer to run tests and come up with a new cam to perform a new function?

A. If you are referring to the fabric shifting uniqueness of it, yes.

Q. Is that your——

A. Yes.

Q. In other words, the fact that the fabric shifts as opposed to the needle shifting——

A. Yes.

Q. —causes the necessity for using a different cam to get as efficient a blind stitch?

[fol. 1452] A. Yes.

The Court: But if you do use that different cam, do you get the same or substantially the same stitch?

The Witness: Yes, yes, in function all the way through.

Q. You mentioned yesterday that there were limitations in Singer's 401, 403 and 404 machine with respect to using the zigzag attachment on different materials.

You said they all had limitations, although they were different limitations; am I correct?

A. I said all sewing machines have limitations—zigzag machines have limitations; attachments on straight stitch machines have limitations.

Q. Limitations unto themselves?

A. Yes, yes.

Q. Thank you. You testified yesterday that to the best of your knowledge every straight stitch sewing machine on the American market will take a zigzag attachment; is that correct—to the best of your recollection?

A. I think it was straight stitch machines sold today, was it not?

[fol. 1453] Q. Yes.

A. And we implied new sewing machines.

Q. I did not hear you.

A. We implied new sewing machines obviously.

Q. Yes; is that correct?

A. Yes, yes.

Q. Have you taken a survey of straight stitch sewing machines? How many straight stitch sewing machines have you purchased or used?

A. I have purchased none.

Q. None. Have you used every straight stitch sewing machine on the market?

A. No, I do not pretend to. My time is too valuable.

Q. Have you seen every straight stitch sewing machine on the market?

A. No.

Q. Do you know of your own knowledge that every straight stitch sewing machine on the American market will take a zigzag attachment?

A. I know from my knowledge on this basis, there are essentially a limited number of kinds of stitch-forming mechanisms and of presser feed and presser bar situations

—feed situations. Even though there are many manufac-
[fol. 1454] turers, many name machines, they all fall into a fairly narrow field of categories. This is what I base my judgment on, in addition to those I have been exposed to.

Q. Are you guessing, then, that these machines all have zigzag attachments?

A. No, I am not guessing. I feel it is a qualified judgment related to my exposure to the public as well as to the market.

Q. Are you saying then that it is merely logical that they would all have zigzag attachments?

A. Yes, it is.

Q. But do you know from your own knowledge——

A. Attachments available. There are many attachments sold on the market that do zigzagging, and zigzag attachments are not new to the American public. Zigzag attachments existed before I started in the sewing machine business, which is 25 years ago.

Q. Are you then saying that zigzag attachments are——

A. A normal attachment to be supplied with straight stitch sewing machines, not always given free, but available separately, of one type or another.

Q. Do you know of your own knowledge whether or not
[fol. 1455] every manufacturer of straight stitch sewing machines supplies, as standard equipment with his machine, a zigzag attachment?

A. I do not know of my own knowledge.

Q. Do you know what percentage do?

A. No.

The Court: Do you know, even if he doesn't supply it with the straight stitch machine, whether or not there is available in the market an attachment which will permit the straight stitch machine to be used for zigzag sewing purposes.

The Witness: That is what I intended to testify in relationship to.

Q. In other words, you are testifying that a consumer can go into the market, buy a zigzag attachment, and probably attach it to many straight stitch machines, is that correct?

A. Yes, and there are a number of zigzag attachments to choose from of foreign manufacture as well as U.S. manufacture.

Q. Do those zigzag attachments vary in price, do you know?

A. They vary in price; they vary in feature.

Q. Do they vary in quality?

[fol. 1456] A. I would presume so, yes.

Q. Is it likely that some of them, to the extent that they were, are not very good? Do you know of some that are not very good? Let me change the question to that.

The Court: Loyalty to her company would compel her to say yes, that Singer is the best.

Mr. Weinstein: Your Honor, we are only interested in the facts, and I am sure Miss Hutton only wants to give us the facts.

The Court: Well, I am sure she does, but her natural inclination would be one of loyalty, I would take it.

Mr. Weinstein: I hope that loyalty, your Honor, does not interfere with her testimony.

The Court: Well, I don't think it does. She has not given any evidence of that. I think she has been very cooperative here and very frank. At least she gives me that impression. I am sure that you get the same impression, too.

A. May I have the question again?

Mr. Weinstein: Please read the question.

The Court: Some of these attachments don't stand up on wear as well as others?

[fol. 1457] The Witness: There is no doubt about that.

Mr. Klots: May I have the question by the Court and the answer?

(Record read.)

By Mr. Weinstein:

Q. Was the same attachment designed to go with the 404 machine specifically?

A. To my best recollection, no. It preceded the 404 machine.

Q. Does Singer sell these attachments separately, do you know?

A. Yes.

Q. If I wanted to buy a 404 machine, could I buy one without getting that attachment?

A. Not today, you couldn't.

Q. Not today. It is standard equipment?

A. It is standard equipment. But this same attachment also fits on the 301 machine which was sold in great quantity prior to——

Q. When did this become standard equipment, do you know?

A. I cannot tell you that accurately.

Q. Can you give me a year?

A. I don't believe I could do that. It is quite some time. [fol. 1458] It is more than a year, I am sure.

Q. Do you know whether it was prior to 1956?

A. Prior to 1956?

Q. Yes.

A. With the 404?

Q. Well, the 404 came out first in 1958, is that correct?

A. I believe so.

Q. And you say this came out subsequently?

A. No, prior to it.

Q. Prior to the 404.

A. With the 301.

Q. Are there zigzag attachments, to your knowledge, that are inferior to these Singer zigzag attachments, from the point of view of operation, result?

A. If you would ask have there been, I should say yes. Are there? I haven't tested zigzag attachments within the last six months anyway.

Q. You don't know what the present situation is with respect to zigzag attachments.

A. Not within the last six months.

Q. Six months ago what was your experience with zigzag attachments?

A. There are zigzag attachments of several designs. We [fol. 1459] feel we have a very fine zigzag attachment that has many points of superiority.

Q. What is the danger in having a poorly designed or inferior zigzag attachment?

A. What is the danger?

Q. Yes.

A. You mean to the company?

Q. What might go wrong in using it? Why does Singer consider its attachment very fine?

A. Because it is functional.

Q. I am sorry?

A. Because it is functional.

Q. Will you explain what you mean by "because it is functional"?

A. It operates dependably.

Q. Are there some that are not functional, that do not operate dependably?

A. Quality of manufacture is important with any manufacturing concern, and I think the old adage goes along: You can always make a cheaper one that works worse.

Q. Isn't it true that an attachment or an accessory specifically designed to go with a particular machine is much [fol. 1460] more likely to give good results than one produced to fit any machine?

The Court: That is not so. We know from common knowledge that that is not so. It is supposed to, but it doesn't always work.

Q. Does Singer sell its own brand needles?

A. Yes.

Q. Are they better needles, in your opinion, than other needles, as far as replacing Singer broken needles is concerned?

A. I think this requires some explanation by me.

The Court: I think you are getting into a Federal Trade Commission hearing.

Mr. Weinstein: No, your Honor. We are merely trying to show that Miss Hutton does not know whether or not every machine on the market has a zigzag attachment. We objected to her testimony yesterday on the ground that she was incompetent to give us her opinion.

The Court: The trouble is that I don't think you grasp the significance of the lady's testimony. She does not say that every machine on the market, every straight stitch machine, has its own special zigzag attachment. She says that her experience in the industry has led her to the belief that [fol. 1461] there is on the market a zigzag attachment which can be secured, irrespective of its origin and manufacture,

which can be applied to any straight stitch machine that is sold.

That, I understand, is your testimony?

The Witness: Yes, yes.

The Court: That is the way I understand it. In other words, you might buy a John Doe straight stitch sewing machine. John Doe Manufacturing Company may not have its own zigzag attachment for that machine. It is possible that they don't manufacture one. But the lady testifies that you can buy on the market a zigzag attachment made perhaps by someone other than John Doe which can be applied and used on the John Doe straight stitch machine. That I understand is her testimony.

By Mr. Weinstein:

Q. Do you know of your own knowledge whether or not every straight stitch machine on the market is capable of being fitted with a zigzag attachment?

Mr. Klots: I thought she had explained that and answered that two or three times.

The Court: Well, we will let her answer it again. If this is an objection, it is overruled.

[fol. 1462] A. May I have the question again?

(Question read.)

Q. That question is directed to your own knowledge. I think it can be answered yes or no.

A. Within my own knowledge, yes, they can be fitted with a zigzag attachment.

Q. What is the basis of your knowledge, Miss Hutton?

Mr. Klots: Wait a minute. I submit, if your Honor please, that the expression "within my own knowledge" is ambiguous. I would like to know whether she means as far as she knows or whether she means that she does know. They are two different things.

[fol. 1463] The Court: You ask her that on redirect.

Mr. Klots: I think, before the answer——

The Court: Well, I know, but we cannot suggest to the witness that her answer is ambiguous.

Mr. Klots: No, sir.

The Court: She doesn't intend it to be ambiguous, I am sure. But if you do want to ask that question, I will accommodate you and ask it myself.

By the Court:

Q. What do you mean when you say within your own knowledge?

A. As far as I know. I know of——

Q. And you have been in this industry for twenty-five years?

A. Twenty-five years.

Q. And during that time you have been doing what at Singer?

A. I have been doing a variety of things, starting out at shop level, teaching and selling, and coming up through supervisory positions until 1945 when I became part of the field traveling staff of the Educational Department. Following that I became Assistant Educational Director, and [fol. 1464] Educational Director in 1956.

Q. Have you, as part of your work and training with The Singer Company, seen and operated machines of other manufacture?

A. Yes, yes. The testing——

Q. For how long have you done that?

A. From about 1950, '51.

Q. And during that time have you tested machines and tried out machines made by manufacturers other than Singer?

A. Other than Singer, yes; attachment manufacturers other than Singer.

Q. Not only attachment manufacturers but sewing machines other than Singer-owned?

A. Yes, yes.

Q. How many years have you been doing that?

A. Well, since '50, '51. Since 1950, 1951.

Q. Since 1950 or 1951.

A. Yes.

Q. Will you give us some idea about how many different machines you try out during a year for the purpose of comparison or study, how many you have tried out? Do you keep a record of it?

A. We do have a record on annual reports for the last— [fol. 1465] oh, I think, two or three years.

Q. Would it run up into hundreds of machines during this ten-year period?

A. It would probably add up to fifty machines and devices a year.

Q. That would be about 500, then?

A. This amounts to two typewritten pages, single-spaced. That is what I am guessing.

Q. All right. You tested, then, in the past ten years about 500 machines and attachments of different manufacturers?

A. Well, I wouldn't say that we had that volume every year.

Q. Well, approximately?

A. I mean the last several years we keep a detailed report form.

The Court: All right.

By Mr. Weinstein:

Q. Did Singer have a zigzag attachment prior to 1958, do you know?

A. Yes.

Q. What year did they have the first zigzag attachment? Can you tell us?

A. Prior to my time with the company.

[fol. 1466] When I started with the company, we had a zigzag attachment that we had to sell.

Q. Do you have any idea as to approximately how many straight stitch machines are being sold on the market today?

A. No, I don't.

Q. You don't know how many straight stitch machines are being sold on the market today?

A. You mean the types?

Mr. Weinstein: Yes, brands.

The Court: Brand names, manufacturers.

A. No, I don't have.

Q. And yet you want us to believe that——

The Court: No. That is argumentative. Don't frame your question that way. It is argumentative.

Q. I will ask you again, do you know of your own knowledge as a matter of fact that every straight stitch sewing

machine on the market today is capable of being fitted with a zigzag attachment?

Mr. Klots: I object to the question as repetitious.

The Court: Overruled. Give your answer again.

Mr. Klots: I ask counsel to say what he means by "of your own knowledge." What do you mean by that?

[fol. 1467] Mr. Weinstein: Whether she knows as a matter of fact.

The Court: Within your own knowledge.

The Witness: Within my own knowledge?

The Court: Within your own knowledge that you have had as a result of your years of experience.

A. Within my own knowledge, every straight stitch machine on the market today can be fitted with a zigzag attachment.

The Court: Would it be safe to say that every straight stitch machine that you have tested and examined in the past ten years could be fitted with an attachment, a zigzag attachment?

The Witness: I know of none that couldn't have been. However, we didn't always test them for zigzag attachments.

The Court: All right.

By Mr. Weinstein:

Q. I direct your attention to Defendant's Exhibit 146A, a swatch of stitches made on the Necchi Supernova machine, and I ask you to examine it. I am not quite sure of the orientation of this. Let us call——

A. We started at the top. This was always the top (indicating).

[fol. 1468] Q. In other words, the buttonhole is at the bottom, and the words "Necchi Supernova Ultra" are at the top. I ask you to examine the top three lines.

A. Yes.

Q. This swatch was made under your direction?

A. Yes.

Q. Do the top three lines employ, one, needle position, cam and cam follower?

The Witness: May I have that again? I think your terminology is different.

Q. Well, I am merely reading.

A. Different from what I understand.

Q. Do these top three lines employ what we generally call needle position effect and cam and cam follower effect and stitch elongation effect

A. I think this can be clarified by referring to our previous testimony. I believe these notations were marked for easy reference, and I think it followed a factual explanation on what we meant by needle position, cam and cam follower.

Q. Can you tell me of your own knowledge whether these top three lines employ stitch elongation?

A. Yes, it is obvious, because we start at this end. This is one interval of stitching. This is the medium elongation, [fol. 1469] and this is the maximum elongation. There are variations of elongation that is shown, because it is a gradual kind of elongation.

Now, as far as needle position, there is one cam, this cam. With the needle position, cam followers enable, with the same cam, the making of this, what we would call a ball stitch, the same cam making this stitch, the same cam making this stitch. In other words, the needle position cam, when the follower is activated, changes the point of origin of the design. These are things that are hard to explain if you are not in the sewing machine field.

The Court: They are clear to me. You said it throws a design either to the right or to the left.

The Witness: Yes.

The Court: Either above or below a center horizontal line.

The Witness: Yes.

The Court: And that is apparent in the first and the third. By elongation you refer to the length of the design?

The Witness: Yes.

The Court: There is a variation there. Don't you observe that?

[fol. 1470] Mr. Weinstein: Yes, I do, your Honor.

The Court: I don't think there is any difficulty on that.

Mr. Weinstein: I just want to clarify this in relation to whether or not similar methods are found on the Singer machines.

By Mr. Weinstein:

Q. I put before you Defendant's Exhibit 106B, which is the insert out of the 401 machine, the cam mechanism, and Exhibit 116B, which is the insert out of the 403 machine, and I ask you to examine them and tell me whether or not this has a provision on it for shifting left, center and right.

[fol. 1471] Mr. Klots: I merely suggest that if the witness would prefer to have the whole machine put before her——

The Witness: I don't need it.

Mr. Klots: She doesn't need it. All right.

A. The 401 and 403 have the provision of shifting from left center to right needle position. The influence of this shifting is in effect only when one is operating at a width narrower than maximum. It does not change the point of origin of the design. It changes the design in relationship to the presser foot. When taken out from under the machine, no one can tell whether it was stitched in right, center or left needle position. It does not change the conformity of the design.

Q. My question again is: using the 401 and 403 machines with a given cam pattern in the machine, may you shift the resultant pattern left, center and right?

A. You can shift the position of the pattern in relationship to the presser foot. You cannot shift the position of the pattern in relation to its conformity.

Q. Fine. So that, to the extent that you get a different [fol. 1472] stitch on this Necchi Supernova, from the point of view of its being shifted, it is only different than Singer's, is it not true? It is not something revolutionary.

A. No, it is a different design. Necchi is not being shifted. On Necchi the conformity, the shape, the pattern is changed. This gives multiplicity.

Q. Which gives multiplicity?

A. The Necchi feature.

Q. Can't you get multiplicity on the Singer machine?

A. This gives multiplicity by a different mechanical means.

Q. What is the function on Exhibit 106-B of the red lever?

A. The red lever has two functions—has three functions. In some operations it is a bight control. In some operations it determines the conformity of the pattern, it determines

the percentage that one cam is influencing the stitch against the other. Under another circumstance it can be a needle position. However, that is not a recommended needle position.

Q. It is a needle position?

A. It can be a needle position. That is not the recommended means of creating it.

[fol. 1473] Q. But it is one of the three functions?

A. It can be, yes.

Q. As long as we have these two exhibits here, I would like to direct your attention to the cam mechanisms and ask you if you know whether or not these two mechanisms are made of the same parts with the exception of the stack of metal cams being on the 401 as opposed to not being on the 403.

Mr. Klots: If she knows.

A. The extent of my knowledge about the sameness of parts would refer only to the black cam itself, the replaceable cam. It is interchangeable.

Q. In your working with Mr. Johnson on this 403 machine, did it ever come to your attention that these machines are substantially identical and that you could very easily convert the innards of the 403 into the 401 machine?

A. I don't know where you would put it because the casting isn't big enough to contain it.

Q. You mean the housing around the machine?

A. I mean the die casting which is a very expensive part of any sewing machine.

Q. Can you point out the die casting for us?

[fol. 1474] A. It is everything you see.

Q. The housing, this brown and gray part (indicating)?

A. Yes.

Q. In other words, the change in the casting would be necessitated by adding the cams and putting this handle through, is that not correct?

A. If what? I mean, you lost me.

Q. Let's take it slowly.

The Court: Of course, this lady is not produced as a mechanical engineer. She hasn't given any testimony as to the engineering features.

Mr. Weinstein: Your Honor, she has testified that she worked with Mr. Johnson in the development of the 401 machine.

The Court: Yes, she gave him the results of her experience from operation, and that is what I understand you testified to.

The Witness: Yes, in use.

The Court: The operation of it.

The Witness: And I stated, I think, before that I am not an engineer.

The Court: No. That is apparent.

The Witness: I am a home economist.

[fol. 1475] Mr. Weinstein: Your Honor, I only pursued it because I thought it was obvious——

The Court: Let me look at these myself. I can make these observations myself with you on these.

The Witness: Of course, we testified that there are many similar parts.

The Court: It appears from my visual observation that some of the castings on the 401 were reproduced on the 403. However, some castings are new and different in the 403 than they are in the 401, distinctly different. That is visually apparent.

Mr. Weinstein: We only wish to show, your Honor, that the changes are only necessitated by having the dial pattern effect. Each machine has essentially the same casting, has the same top fitted for the black cam.

The Court: Each machine has many castings in common, suppose we put it that way, and that is apparent from a visual observation. I don't think we need testimony on that.

However, there are a number of castings which are found in the 401 which you do not find in the 403, and it appears that there are castings in the 403 which are different than those in the 401, not only castings but other mechanical [fol. 1476] features. You will notice that the spring arrangement that functions on the cam follower is different on both the machines.

Mr. Weinstein: I think that may be from a change of design.

The Court: I don't know to what it is due, but there it is. All right.

Mr. Klots: I suggest, your Honor, if any more of these mechanical questions are to be asked, they be asked of somebody who is an engineer.

The Court: I am going to permit him great latitude in his cross-examination. If Mr. Weinstein propounds a question that you think is objectionable, you object to it. But I am not going to give him an omnibus direction which is going to limit his cross-examination.

By Mr. Weinstein:

Q. With respect to stitch elongation, Miss Hutton, examine Exhibit 146-A and examine the top three lines. Take the first line. Isn't it true that the pattern is exactly the same?

A. Yes.

Q. Just the length of the pattern differs?

A. Yes. There are more stitches between the beginning [fol. 1477] and the end.

Q. And isn't it true that the 401 machine either is or could be designed to produce that pattern?

A. No, it is not.

Q. It is not?

A. It would not be a 401 machine.

Q. No, no. I am not talking about the elongation feature.

A. I am sorry.

Q. I am talking about the specific design, the shape.

A. Yes, yes, and I so stated when this original testimony was given in order to explain the difference.

Q. And didn't you testify that numerous cams could be made?

A. Yes. This part, with a 24 stitch interval, would require three different cams for the 401, 403 machine or the automatic zigzag attachment which would be in the 12 cycle. [fol. 1478] Mr. Klots: You are pointing to the lefthand edge of this swatch?

The Witness: Yes.

The Court: So that we have it all on the record, what is the exhibit number?

Mr. Weinstein: I believe it is 146A.

The Court: 146A.

By Mr. Weinstein:

Q. In other words, if Singer chose to give this feature to the consumer, it could do so by merely having her turn this knob to three different positions and getting the elongation effect?

A. No, you were not talking about elongation. You said you were talking about this (indicating).

Mr. Klots: What do you mean by "this feature"?

Q. Can this be produced on a cam used on a 401 machine?

Mr. Klots: May the record show what he is pointing to, your Honor?

The Court: He is pointing to the beginning——

Mr. Weinstein: The lefthand third——

The Court: —with the smaller elongations.

A. No. At this point the elongation has not been in use. This is the base position. This is the standard number of [fol. 1479] penetrations per design.

The Court: Before the elongation is put into operation.

The Witness: That's right.

Q. Could a cam be designed to reproduce this particular design in the lefthand third of this exhibit you are looking at?

A. Three cams could be produced.

Q. No. Please answer my question.

A. Could one cam? No.

Q. One cam could not be designed——

A. To produce these three things?

Q. No. The first third of the top line.

A. Of the top line. One cam could be designed to produce this, and this is what we call, I believe, the solid scallop.

Q. You do have a cam of that nature?

A. Yes. We have one of the second. I doubt if we have one of the third.

Q. Could a cam be produced to produce the middle third?

A. No, it could not. There are too many penetrations. There are more than 24.

Q. A cam could not be designed to do that?

[fol. 1480] A. No it could not.

Q. Could a cam be designed to produce the lefthand third?

A. No.

Q. In other words, you say these portions are not producible by any cam that could be manufactured?

A. That's right, because needle penetration No. 25 must start at exactly the same place as needle penetration No. 1, in Singer. You would be left high and dry in the middle of it.

The Court: What "it" means I don't know.

The Witness: The "it" is the long scallop, the elongated end of row No. 1.

Mr. Klots: If your Honor please, may I ask Mr. Weinstein: when you were talking about whether a cam could be developed, you meant for the Singer machine?

Mr. Weinstein: The 401 machine.

The Court: I understand that, and the witness did, too. She shakes her head.

The Witness: Yes.

The Court: She shakes her head affirmatively or nods her head, I should say.

* * * * * * *

[fol. 1481] By Mr. Weinstein:

Q. Miss Hutton, you testified that you were the head of the Singer Educational Department?

A. I am Educational Director, yes.

Q. You have been Educational Director for how long?

A. Since April 1, 1956.

Q. How many people are in your department?

A. We have 19, I believe, on the payroll today.

Q. Would you mind telling me again what the functions of your department are.

A. The functions are varied. We are primarily responsible for consumer education and employee education related to product. It goes further. There are other definite divisions in the department.

Q. What are those divisions?

A. We have a group within the department that works on product and product development. This is the aspect of testing prototypes, testing and evaluating, I should have said. We evaluate and test production, both initial and continued production. We test competitive machines. We test threads that are submitted to us. We test notion items that are [fol. 1482] submitted to us that relate to sewing and sew-

ing usage. I mean, this is an evaluation of the product department from a consumer viewpoint, from a use viewpoint. This group also does the instruction books.

Q. When you say "test the products," you mean you test it just from the consumer viewpoint?

A. We test it from an operational viewpoint. We put it through sewing operations, and our experience over a period of eight or nine years has enabled us to more or less standardize and streamline on test procedures.

Q. In other words, is it true that the tests that you put a machine through give you a pretty good idea of how good a machine it is?

A. And the well-rounded performance of that machine.

Q. You speak of education of both the public and members working in the Singer sewing machine shops. Can you tell us a little bit about what you mean by education of the consumer?

The Court: Well, I take it that the questioning that you are now pursuing is not from the point of view of the job analyst to find out what grade pay she should get and what work she does but is directed to determining her qualifications as an expert concerning the matters on which she [fol. 1483] has given testimony?

Mr. Weinstein: No, your Honor. I am interested in the internal operation of her department.

The Court: What bearing does that have on this case, except in so far as it might affect her qualifications as an expert and the testimony she has given which she says flows from her observations?

Mr. Weinstein: I think it sheds light, your Honor, on——

The Court: I mean, I am trying to get the purpose of this line of interrogation.

Mr. Weinstein: I think it sheds light upon the value of the recommendations made by people within her department, the type of work they do. I think that Miss Hutton is supported by her staff. Her work must, in turn, be judged by her staff and what they do and the information she gleans from her staff. In so far as she does not get it firsthand from the consumer, it must come up through these people that work for her, so to that extent we think that the functions they perform and what they do in the field, the infor-

mation they garner, are important in judging the impressions that Miss Hutton has gotten from them.

The Court: I think, then, your questioning should be direct [fol. 1484] to that phase of her work and her testimony and not skating around, much as you would if you were an efficiency man or a job analyst or a personnel man. Come direct to the question and ask her direct questions, and come right down to the issues.

Mr. Weinstein: I think the questions have to be somewhat broad, your Honor, because I don't know if they do, and I cannot even lead her on this.

The Court: I will do it, if you want me to.

Mr. Weinstein: I will be more than happy to do it, your Honor.

The Court: Did you want to say something, counselor?

Mr. Elkins: No, your Honor.

By Mr. Weinstein:

Q. Do the workers who work for you go out and demonstrate machines at fairs and department stores and places of that nature?

A. If you consider the annual convention of the American Home Economics Association a fair or within the category that you are quoting, yes, I do that myself.

Q. Do the other members of your staff also do that or similar things?

A. Members of my staff do it. I noted in my original testi- [fol. 1485] mony regarding my work that we have some 75 to 80 educational supervisors located in the 32 or 36 agencies; I am including Canada now. There are 32 U.S. agencies. These girls are under our indirect supervision in so far as we supply them with knowledge. We do not administrate as far as their pay and time. They are educational supervisors, and they are directly related to the Educational Department.

These girls are constantly working in all fields of customer contact as well as in training the new girl on the shop floor or the new girl in the sewing room. These girls are together with us at meetings periodically.

Q. What kind of meetings, may we know?

A. Well, educational meetings, meetings where we hash out problems, where we find what their recommendations

are, where we find out what changes need to be made, what emphasis needs to be made.

Q. Who is in charge of those meetings ordinarily?

A. It would be either myself or members of the traveling staff, the Educational Department traveling staff.

Q. How many members are there on this traveling staff?

[fol. 1486] A. We are down to four at the moment because we have a vacancy. Normally there are five girls. They travel 48 weeks out of 52. They are scheduled from our department and paid from the New York office. They are in at least once a year. Often, individually, they are in more often. We have a direct and constant contact with them and reports on every single shop visit and agency visit they make. This is the kind of work I spent a number of years doing myself.

Q. These women have an expert knowledge of Singer sewing machines, do they not?

A. These women have more years of experience with the company than I.

Q. Would you say that every woman on your staff is completely familiar and versatile in using all of the Singer sewing machines?

A. Yes, absolutely.

Q. Would you say that——

A. Except secretaries, of which we have three.

Q. Are they included in the number you gave us?

A. You asked how many employees. They are employees. They are not technical staff. There are three clerical people.

Q. And how many technical staff?

[fol. 1487] A. Well, three from 19 is 16.

Q. Are they generally familiar with the operation of competitive machines? And I use "competitive" in a very loose sense.

A. If you use "generally" in a very loose sense as applied to some of them, I will say yes.

Q. Were the people that prepared the swatches which were introduced by Mr. Klots in evidence members of that staff?

A. They are members of the group that I would say are especially familiar, because these are girls that are doing product testing as I enumerated.

The Court: Would you be able, here, now, yourself, if asked to do it, to reproduce any of these swatches?

The Witness: Yes, providing I could use the instruction book. From rote, memory, in front of a group like this——

The Court: You would get a little nervous?

The Witness: —I would expect to forget some adjustments. With use of an instruction book, by all means. There is nothing fantastic about the operation of any of these machines.

The Court: And it could be reproduced, if required, right [fol. 1488] here, duplicates?

The Witness: Absolutely.

The Court: I am not asking that they be reproduced, but if you want any reproduced, I suppose we could have that done, if you question of the authenticity of any of these swatches.

Mr. Weinstein: We do not question that they were made by members of Singer's staff, your Honor.

The Court: Or on the respective machines designated?

Mr. Weinstein: Nor do we question that.

The Court: All right.

Q. In what you refer to as customer education or public education or public relations, do you have occasion yourself, personally, to talk to many people at this American Home Economics Association meeting?

A. Yes, we have hundreds of people visit our booth.

Q. What type of people generally come to the booth?

A. The attendance at the American Home Economics Association Convention is composed entirely of home economists. Some of these home economists are foods people. The majority of those who come to our booth are those who are either teaching clothing and textiles in colleges or they are teaching a varied range of home economics. Some call [fol. 1489] it home and family life. They have a number of names for it in schools today, in junior high schools, in senior high schools, at the secondary school level. There are a group that are home economists in business, the HEWIBS. These are girls who work for companies. It includes all home economists in business. They are foods companies as well as the sewing industry.

Q. I would imagine people come to this conference, do they not, who represent newspapers, who write home economics columns?

A. To some degree. However, most of those contacts are made here in New York. There are so many sources—the magazine location is in New York.

Q. I am sorry.

A. The magazines are usually edited in New York. These editors we might see, but we spend less time with them simply because we can see them any day in New York.

Q. Under what circumstances do you normally meet people from publications with respect to your work?

A. Normally for editorial.

Q. Can you specify a little bit? I don't quite follow that.

A. They would be sewing articles.

[fol. 1490] Q. Sewing articles?

A. Articles done editorially.

Q. Do all members of your staff consult with these people?

A. No, of course not.

Q. Do you do most of that work?

A. No, I don't.

The Court: You mean if you give a magazine an ad, they give you a write-up? Is that what you mean?

The Witness: Not necessarily. There are many magazines that we get periodic promotions, general sewing promotions or, often, specific sewing promotions, because we do sewing and designing for editors. We have several very good designers in our workroom. Let me see. There are five girls involved in supplying editors with materials that encourage and promote and instruct in home sewing, in the full range.

Q. Can you name some of the magazine editors or personnel that you have consulted with in the past three or four years? Merely name the magazines, and I think that will be sufficient.

The Court: I don't know what your purpose is. Do you have a magazine article you want this witness to look at?

[fol. 1491] Mr. Weinstein: No, your Honor. I think we can tie this up.

The Court: Why don't we come right down to it? What is the purpose of this?

Mr. Weinstein: Well, your Honor, there are numerous

magazine articles that have been introduced with statements ranging all over the lot, and we are anxious to know whether or not these people are educated by Singer. Singer being the sole American manufacturer, it seems to me that——

[fol. 1492] A. I presume you understand that this kind of function, the source and all is what the company pays an advertising agency to make the contacts, to create the contact and very often to disseminate the information.

Q. Do you ever disseminate information to Good Housekeeping, for instance?

A. Yes, yes.

Q. Consumers Reports?

A. I have personally given nothing to Consumers Reports. I presume that would come from a more technical source.

Q. Will you tell us what you mean by "a more technical source"?

A. Well, Consumer Reports deals more with the mechanics.

Q. Are they not concerned, to the best of your knowledge, with the housewife and what she wants?

A. They have not contacted me and I have not contacted them, but whether the company has given them information I cannot testify to because I do not know.

The Court: In your stores—for instance, the one you have up in the Bronx on Fordham Road, you have a demonstrator [fol. 1493] there that gives lessons?

The Witness: Absolutely, yes.

The Court: And if a man, a young husband goes in with his bride to buy a sewing machine, they will give a demonstration?

The Witness: Yes, that is part of sales work. As I understand it, Consumers Reports and these consumer magazines, they do not want to be fed information. They go out and buy a machine and have it tested in their own labs.

Mr. Weinstein: Your Honor, I ask that that be stricken. This witness is not qualified to testify.

The Court: Of course she is not, but you——

Mr. Weinstein: I asked her specifically, your Honor, as to her connection with Consumers Reports.

The Court: She said she hasn't anything to do with it, and I will take that as her answer. She says that is taken care of by the technical department.

Mr. Weinstein: And I ask that her last sentence be stricken.

The Court: We will strike it. I am not going to pay attention to it.

Q. Have you ever contacted people or been contacted by people representing Consumers Research Bulletin?

[fol. 1494] A. No, I personally have not.

Q. Have you personally written any article for sewing machines or sewing machine operation or consumer desires in the way of sewing machines?

A. That was published under my name do you mean?

Q. No, I did not ask you that. I asked you whether you had ever written an article?

A. I have never written an article as such. There is material that I have written that might have found its way into being printed.

Q. Do you know of any material——

A. I do not know of any.

Q. Have you ever ghosted an article, Miss Hutton? I use the term ghosting in the sense that it is written but not under your name.

The Court: No, written under her name but somebody else has done it. It is like ghost-speeching. You have somebody to write it for you.

Q. Have you ever written an article which has been published or reproduced under somebody else's name?

A. You are speaking of magazines and newspapers?

Q. Any articles that might have——

A. Are you speaking of books?

[fol. 1495] Q. Any of those.

A. I have written books that have been published in the Singer Company name.

Q. Under the Singer Company name, and you have written instruction books?

A. Yes.

Q. Have you ever written a magazine article or an article that appeared in a magazine?

A. Not that I can recall.

Q. Or in a newspaper?

A. No, I don't think so.

Q. Has anybody on your staff ever written an article which has appeared——

A. We are constantly writing—members of our staff constantly write sewing instructions that become parts of articles.

Q. Can you give us the specific instances—can you recall any of them?

A. I would not give you—I would not attempt to recall specific instances. I am constantly okaying copy. I wouldn't begin to tell you—I mean, we can produce evidence, I am pretty sure, of some of that but I wouldn't begin to tell you. I would not really——

Q. Do you keep records?

[fol. 1496] A. I do not keep records of that kind.

The Court: Is this preliminary to your confrontation of the witness with a specific article?

Mr. Weinstein: Your Honor, there are a number of articles that the defendants have put in evidence.

The Court: Why don't you bring one out and show it to her and ask her?

Mr. Weinstein: Your Honor, a number of articles have been placed in evidence by the defendants. We do not know how they are going to use it. We do not know whether they are going to bring them up before the Court or whether they are going to rely upon them for findings at the close of the trial.

The Court: They are in evidence, and if you have any particular article that has been received in evidence that you want to question this witness about, produce it, show it to her and interrogate her about it.

Mr. Weinstein: We have no further questions on this subject, your Honor.

The Court: All right.

By Mr. Weinstein:

Q. You spoke yesterday of Singer's first machine being the 404, and I believe you said that by that you meant not [fol. 1497] that it was first from the point of view of com-

ing out on the market but it was your low price 400 series machine.

A. I believe my statement was that the 404 was the first in the slant needle series, and by "first" I meant the first in the sequence of price build-up—the first in the sequence of simplicity.

Q. What do you consider the top of that line?

A. The 401.

Q. 401?

A. Yes.

Q. Which is——

A. This machine (indicating).

Q. —Defendant's Exhibit 106 in evidence.

You stated yesterday that an informed consumer would only draw a distinction between the 401, 403 and 404 on the basis of two factors: one, price, and two, whether she considered——

A. I don't believe I said that. May I have my own words? Because I think they mean differently.

Q. Well, I will just ask you the question again.

Do you think that price is a factor to an informed customer that comes into the Singer store?

A. Yes.

[fol. 1498] Q. Am I quoting you correctly when I say that you said yesterday that the only difference between the 401, the 403 and the 404 machine was in the cam mechanism, either its absence in the case of the 404, or the replaceable cam mechanism or the multi-cam mechanism in the 401.

Mr. Klots: I don't think she said that.

A. I didn't say it that way.

Q. Did you not testify yesterday that the only difference in the 400 series machines related in the means for producing the patterns by cams, the type of cam mechanisms?

A. No, I did not.

Q. You did not state that yesterday?

A. No.

The Court: If you have such testimony you had better show it to the witness. Otherwise this questioning hangs in the air.

Q. I am reading to you from page 1399 of the record. I asked you——

The Court: No, "Were you asked this question and did you make this answer."

Q. Were you asked this question:

"Q. What does the 403 machine have or do that the 401 [fol. 1499] machine does not do", and did you answer——

Mr. Klots: That is not quite the question.

Q. "Q. What does the 403 machine have or do that the 401 machine does not do?"

Do you remember being asked that question?

A. The cam——

The Court: Pay attention. Were you asked that question?

Q. Do you remember being asked that question?

The Court: "Do you remember being asked that question and making this answer 'Answer'—" Read the answer.

Q. Do you remember giving this answer—do you remember being asked that question?

A. I was asked so many that were so closely related——

The Court: This is a slightly unorthodox way of examining the witness. If you will follow my suggestion, I think you will get somewhere.

"Were you asked this question and did you make this answer"—and then read it to her, question, answer.

Q. Were you asked this question and did you make this answer "Q. What does the 403 machine have or do that the [fol. 1500] 401 machine does not do?

"A: You are talking about operations now?"

Do you remember that?

A. Yes, and that was quite confused——

The Court: Please—do you remember that?

The Witness: Yes.

The Court: Did you make that answer?

The Witness: Yes.

The Court: Then "Were you asked this question and did you make this answer"—go ahead.

Q. "Q. Yes. Aside from the zigzag pattern mechanism.
"A. Nothing.
"Q. Nothing?
"A. Aside from the zigzag pattern mechanism."

Do you remember that?

A. Yes, but it really doesn't——

Q. Do you remember it?

A. Yes.

Q. I ask you again, is it or is it not true that the only substantial difference between the 401 and the 403 machine resides in the cam mechanism?

A. We were talking about operational in that line of questioning. If you are still referring to operational dif-
[fol. 1501] ferences, none.

Q. What do you mean by "operational differences"?

A. I mean that there are parts that are different in this machine, some parts.

Q. Is the difference in parts—does the difference in parts arise because one has built-in cams and one has replaceable cams?

A. Yes, but there is a difference with the cam itself. It is in linkage and——

Q. But created—the difference is necessitated by the difference in the cam mechanism, is it not?

A. Yes, if you are using your term in a broad sense.

Q. No, I am not using my term in a broad sense. I am using my term in a narrow sense.

I showed you these before and I was told that you were not qualified to testify to it. Now you want me to distinguish between "narrow" and "broad" senses.

Are these machines the same except that one is a replaceable cam machine and one is a built-in cam machine? Do they have the same tensioning devices, the same needle devices?

A. Yes.

[fol. 1502] Q. And the same feed reversing devices?

A. Yes.

Q. The same fine stitch devices?

A. Absolutely.

Q. And if there are some differences in the casing; that is required because one cam mechanism takes a little different spacing requirement than the other?

A. That is right—the outward design, the plating, the top cover plate is different.

Q. But again——

A. It relates indirectly to the lack of bulk required for housing the multiple cam device.

Q. And is the 404 machine different from the 403 and from the 401 solely because it does not have a cam mechanism which is designed to take zigzag patterns?

A. It goes a little further than that.

Q. Would you explain what you mean?

A. It is different in respects because it is designed not to —even basic zigzag—you are not distinguishing in your remarks between patterns of basic zigzag, I presume.

Q. That is right—the 401 machine and the 403 machine, if you were not going to have zigzag pattern mechanism [fol. 1503] included within them, would be no different than the 404 machine, is that correct? In other words, taking——

A. They would all be 404s you mean?

Q. Yes.

A. If you do not have the 403 and the 401 you would have 404.

Q. Taking away the mechanisms of the 403 and the 401, is there any feature which the three machines do not have in common?

Mr. Klots: Again I suggest, your Honor, that she is not an engineer and she cannot answer.

The Court: If she cannot, she will tell us.

Q. Did you——

The Court: In other words, let me see if I understand Mr. Weinstein.

The basic machine is the 404—that is a straight stitch.

The Witness: Yes. However, the 401 was designed first. The others sprung from that.

The Court: Oh, the 401 was the first machine?

The Witness: Yes.

The Court: And that is with the built-in cam?

[fol. 1504] The Witness: Right.

The Court: And then the next machine was the 403?

The Witness: 403.

The Court: And that is with the replaceable cam?

The Witness: Right.

The Court: And then the 404 is the 401 essentially with all the cam mechanism taken out?

The Witness: And they were designed to have as many parts in common as possible and still be the kind of machine they are.

The Court: All right, that is sensible. If they had as many parts in common it would be less costly in production.

The Witness: Absolutely.

Q. Did you write the instruction book for the 401 machine?

A. I did not physically write it.

Q. Was it written under your supervision?

A. It was written in our department. The educational department works in conjunction with the editorial department at the Elizabethport factory.

Q. Are you thoroughly familiar with the contents of this [fol. 1505] book (handing witness)?

A. Yes.

Mr. Weinstein: Let the record show that this is Government's Exhibit 201 in evidence.

Q. Are you thoroughly familiar with the similar books for the 403 and 404 machines?

A. Yes.

Q. I ask you again whether there are any distinguishing features between these three machines which do not relate to the cam mechanisms, either the type of cam mechanisms or their absence or presence, and the cam mechanisms that are designed to produce zigzag patterns?

A. If you are going so far as to want me to point out the fact that the feed dog is different in design on the 404 than it is on the 401 and 403, I am interpreting that to be related to the lack of swing of the needle that has permitted it—I mean, you classify it and I will give you the information.

The Court: I think the witness has answered this very plainly.

Mr. Weinstein: Your Honor, I have read the transcript

yesterday and although I think the witness gave me this answer, I wanted to be sure that it was crystal clear.

[fol. 1506] The Court: Now you are sure—I mean, are you sure now?

Mr. Weinstein: I think I can tie it down in another minute or so.

The Court: Go ahead, take your time.

Q. Laying aside for the moment cam mechanisms, are the features described in this book, in the operations, that you can get on the 400 series machines identical?

A. On the 400 series machines? No, they couldn't be.

Q. Laying aside cam mechanisms, they are not identical?

A. Laying——

Q. Laying aside—forget the cam mechanism, do you have a different tensioning adjustment?

A. We do not.

Q. Can you specify the differences in the machines?

The Court: Between what machines?

Mr. Weinstein: 401, 403 and 404.

The Court: What is the difference—take two machines.

Are you able to say what are the construction differences [fol. 1507] between the 401 and the 403—if you know.

The Witness: I think an engineer would be required for that.

The Court: All right. Can you tell us the construction differences between the 403 and the 404?

The Witness: No.

The Court: An engineer would.

The Witness: That's right.

Q. Let us confine ourselves to the 401 and the 403 machine.

A. Yes.

Q. Does either of these two machines perform a function that the other two will not perform, aside from the differences?

The Court: You are talking about two machines?

Mr. Weinstein: 401——

The Court: Does either one of these two machines, the 401 or the 403 perform a function that cannot be performed by both?

The Witness: Does either one perform a function that cannot be performed by both?

The Court: Yes, ma'am.

The Witness: Yes.

[fol. 1508] Q. What is the difference?

A. The 401 can make stitches that we have termed or described as variation stitches and combination stitches.

Q. Is that because it has a built-in mechanism from which you can select information from two cams simultaneously?

A. Right.

Q. Are there any other differences between these two machines?

A. Not that I can recall by rote. If you want, I will testify as to whether——

Q. No, is there any——

A. I cannot recall.

Q. Aside from the 401 being a built-in cam machine, and the 403 being a replaceable cam machine, they have all of their features in common; is that not true?

A. Yes.

Q. The 401 we discussed yesterday cost approximately $60 more than the 403.

Did you not testify that price is a factor that the customer takes into consideration?

A. Price is one of the factors, yes.

[fol. 1509] Q. I tell you that it has been stipulated that in 1960, approximately twice as many people bought the 401 as bought the 403; and in 1959, approximately three times as many people bought the 401 as opposed to the 403.

Since the 401 costs approximately $60 more than the 403, isn't it true that the customers that purchased the 401 machine bought that machine in spite of the increased cost?

A. No it is not, because many of the customers probably had not investigated as to the price of the 403 machine.

Q. In your experience as head of the Singer educational department do you expect us to believe that the average consumer walks into a Singer store, looks at one machine, purchases it and does not even ask to see the other machines?

The Court: The Court sustains its own objection.

You are getting into an argument with the witness.

Please do not do that. I have asked you that before. What she expects us to believe or not is not proper.

Q. Is it a fact that people come into the Singer stores and [fol. 1510] merely ask for the built-in cam machine?

A. I think I testified that I have never heard of that happening.

Q. How many shops have you been in in the last two years?

A. I would be—it would be only hearsay if I guessed. I couldn't begin to guess.

The Court: It wouldn't be hearsay. "Hearsay" is what somebody else tells you.

The Witness: It would be hearsay if I guessed because it would be a wrong guess.

Q. How many customers have you spoken to in the last two years?

A. I would not venture an answer.

Q. You cannot even give us an estimate, Miss Hutton?

A. No. I answer the telephone, it rings constantly.

Q. How many machines have you sold in the last two years?

A. I haven't sold any. That is not my function.

The Court: It isn't smart for a supervisor to take a sale away from a saleslady, is it?

The Witness: Absolutely not.

Q. Do you ever sell a machine except for the closing of [fol. 1511] the transaction and let a saleslady take over and make the sale?

A. What do you mean—do I today?

Q. Yes.

A. No.

Q. Have you in the last two years?

A. Yes, at conventions.

Q. Have you visited Singer shops around the country in the last two years?

A. A few.

Q. How many, can you approximate?

A. Not too many. We have——

Q. What was your answer?

A. Not too many.

Q. You were going to say—I am sorry, I thought you had not completed your answer.

A. No, I am finished.

Q. I show you a copy of Plaintiff's Exhibit 200, which is the advertisement you testified to yesterday, and I direct your attention to the left-hand side of the advertisement under the picture of the 401 machine, where it says "Famous Slant-O-Matic". . . finest fully automatic sewing machine you can own."

And I direct your attention to the picture of the 403, in [fol. 1512] the upper right-hand corner and the words underneath where it says "New! Slant-O-Matic Special . . . brilliant automatic machine." And I ask you what you mean by the term "automatic machine" and "fully automatic machine"?

A. (After examining) I think the use of cams is the basis for the description. The zigzag is produced in contrast to a manually produced——

Q. What is the difference between, in your terms "fully automatic machine" and "automatic machine"?

A. Multiplicity.

Q. Multiplicity?

A. Yes.

Q. You mean the ability to combine information from two cams, is that what you mean?

A. No, not necessarily. The ability to do a range of—oh, decorative operations, based on more than one principle. This kind of terminology is advertising terminology.

Q. Please answer my question. I asked you—you told me that the only difference between these two machines is that one has built-in cams and the other has replaceable cams,

A. Yes.

[fol. 1513] Q. I show you the pictures here and one says "fully automatic" and the other says "automatic".

Doesn't this mean that what this is—isn't what this advertisement means is that a fully automatic machine is a machine with built-in cams, and an automatic machine is a machine with replaceable cams?

Mr. Klots: I suggest, your Honor, to find out whether this lady wrote this.

The Court: We can ascertain that from reading the exhibit ourselves.

On the 403 it says "Just slip a disc onto the machine. Presto! You're decorating linens, curtains—things for the family. It's the easiest to operate automatic machine you can buy."

They are both called "automatic" machines.

Mr. Weinstein: Your Honor, the 401 is called "fully".

The Court: "Fully", that is right, and it is apparent that that is because you do not have to replace the cams if you do not want to. If you are satisfied with what is in it, go ahead. If you want more variety, you replace it.

Q. Is his Honor correct, Miss Hutton?

[fol. 1514] A. Yes.

The Court: Even in the 401 you can change the cams if you want to, can't you?

The Witness: Yes, yes.

The Court: And you have how many cams that go with that 401 as a standard set?

The Witness: You have four additional—there is one replaceable in the machine and four replaceable in the box——

The Court: In any event——

The Witness: I think any of the cams that are available for the 403 can be purchased for the 404.

The Court: 401 we are talking about.

The Witness: I misspoke.

The Court: In other words, the 401, although it has a fully automatic fixed cam, you can take those cams out and change them?

The Witness: Right—not those particular fixed ones but the one on the top.

[fol. 1515] The Court: On the top.

The Witness: Yes.

Q. You can only remove the one cam?

A. Yes.

Q. Isn't it true that you can get in excess of 22 patterns without removing any cam from the 401 machine?

A. Yes.

Q. Isn't it true that you testified yesterday that 22 patterns, so far as the average housewife is concerned, is more than enough?

A. Yes.

Q. Isn't it true that the average housewife, again in the case of using her machine, would have no desire or necessity for replacing the cam?

A. In the 401 are you referring to?

Q. Yes.

* * * * * * *

The Court: When you ask the question of a female's desires or a man's desires, you are getting into a very touchy subject.

Mr. Weinstein: I will withdraw the question.

The Court: I think we all have desires, and we do not like to have them all publicly known.

[fol. 1516] Q. Miss Hutton, I direct your attention to the 401 machine and to the flip-up chart on it.

Didn't you testify that you recommended that those patterns and that selection chart be placed on the machine because you felt that those were the most desirable patterns?

A. We had a voice in the selection of the patterns, yes.

Q. Does every one of the 400 series machines have a slant needle to it?

A. Yes.

Q. Is that one of the features that help sell the 400 series machines?

A. I would think so.

Q. Do you know so?

A. Yes.

Q. Isn't it true that that slant needle is actually inferior in the sense that it is inconvenient and troublesome when stitching materials because it is at a 9-degree angle?

A. I don't know what would make you think that. That certainly is not my opinion.

Q. Isn't it true that the tensioning device on the 400 series machines is an old-fashioned tensioning device? I am [fol. 1517] asking you for your opinion.

A. Isn't it true that it is an old-fashioned device?

Q. Yes.

A. No; it is extremely functional.

The Court: What do you mean by "old-fashioned"? One that has been in use for some years?

Mr. Weinstein: Your Honor, we ask that the defendant's

exhibit 146B, although it is in subject to a motion to strike, be stricken at this time. It is clear that the very witness that was to put this exhibit in, or put it in at least for the time being, has impeached the very accuracy of this comparison chart.

The Court: I do not know whether she has or not. I do not see that. I received this in evidence subject to further proof as to its source because you said you did not know and were not prepared to concede its source, so I said to the defendant's counsel that they bring in some witness, if necessary, by subpoena.

Mr. Weinstein: I merely suggest, your Honor, that even if Singer is able to find a sponsoring witness for this chart, that it has been impeached by a witness of Singer.

I refer you to item No. 8 on the righthand side of the chart [fol. 1518] which says "A needle that slants has a longer motion in going through the material. It is liable, in some cases, to cause trouble and inconvenience, in sewing certain materials."

I refer you to item No. 4 which says: "Old-fashioned type of tension adjustment. No clearly marked red dot for normal tension setting."

Now Singer has asked us to take this chart as an accurate comparison between the Necchi and the 401 machine, your Honor, when it is quite clear that they themselves do not believe it.

The Court: You pointed out one of 19 items enumerated in that order—1 to 19.

Mr. Klots: We also offered it to show what Necchi pointed out in competition with Singer.

The Court: And there are claims that the Necchi machine is better and performs all the functions of the 401. That was the reason I took it into evidence.

Mr. Weinstein: Your Honor, if it is in for accuracy, then I again suggest respectfully that it is obviously inaccurate, at least from the point of view of Singer.

The Court: You mean that Singer is meeting unfair competition from Necchi? If you want me to take notice of that, [fol. 1519] I will do it.

Mr. Weinstein: I am sorry, your Honor.

The Court: If you want me to take notice of the fact that this is an act of unfair competition, that Singer is meeting

from Necchi, I will do it; that Necchi is making claims for its machines which aren't so, as against Singer's.

Mr. Weinstein: If that is the purpose for which it is coming in, your Honor, we have no objection to it coming into evidence for that purpose alone.

The Court: No. It is coming into show that there are claims in the market which substantiate the position taken by the defendant, that is, that there are machines imported from Japan and from other places, of foreign manufacture, which perform all the functions of the 401, and in addition perform other functions.

Mr. Weinstein: Your Honor, that goes to its accuracy.

The Court: You can raise this point, if you want to, by way of argument.

If this is a motion to strike at this time, to strike this exhibit, Exhibit 146B, your motion is denied, and you have an exception.

I still want some proof as to the source and origin of this [fol. 1520] exhibit presented by the defendant, and I anticipate that that will be presented.

Mr. Klots: We will, sir.

I think it might be appropriate at this time to say also that this exhibit, which Necchi describes as a replaceable cam machine, which it is, is described at the top as a "fully automatic" zigzag machine which has a replaceable cam mechanism.

By Mr. Weinstein:

Q. Miss Hutton, have you ever heard of Mr. D'Amico?

A. Not that I recall. Who is he?

Q. Are you consulted as a matter of practice when Singer files patent applications on new types of sewing machines?

A. No.

Q. You are not. Were you consulted by Mr. Johnson after he filed this patent application and before he filed it?

A. Regarding his patent?

Q. Regarding the mechanism which was the subject of that patent application.

A. We are consulted on development of product, but the status of the patent we have no idea about.

[fol. 1521] Q. Do you know whether or not Singer is

planning to produce a machine which has both cams for the feed and cams for the needle?

A. I do not.

Q. You do not.

The Court: Cams for the what?

Mr. Weinstein: Cams for the feed and cams for the needle, your Honor.

The Court: I cannot get the significance of that. Suppose they are doing that? What significance do you want me to attach to that?

Mr. Weinstein: Your Honor, we have evidence to show that these wonderful fantastic machines, which we think are essentially gimmicks, and we just want to show that Singer isn't terribly concerned with competition of this type, that if this machine was a serious concern——

The Court: If they are gimmicks, then I do not know what this suit is all about.

Mr. Weinstein: We are not talking about the multi-cam machine; the built-in cam machine. We are talking about machines that do everything but take off and fly—the machines which were introduced yesterday.

The Court: Which machines do you mean?

Mr. Weinstein: I am talking about Vigorelli and the [fol. 1522] Necchi Supernova Ultra.

The Court: And you claim that they are inferior machines?

Mr. Weinstein: I think the question of inferiority is a broad question. I claim that they are certainly of no interest to the average home sewer.

The Court: I don't know, but your statement of facts is quite to the contrary. Your statement of facts sets forth, as I recall it, that there is a very substantial number of these imported machines of foreign manufacture which are sold here and bought by the American housewife—I mean that is right in your statement of facts.

It is almost a fact of common knowledge that the Necchi machine and the Elna—you see their signs all over the country almost, advertising signs every place where I have been, on the West Coast to the East—from Maine down to Florida and Louisiana—I have seen the Necchi sign all over.

Mr. Weinstein: Your Honor, Necchi makes numerous machines, I understand.

The Court: All right.

By Mr. Weinstein:

Q. Miss Hutton, I show you Defendant's Exhibit 68 and [fol. 1523] I ask you if you wrote that.

A. Yes.

Q. This is in evidence.

A. Yes.

Q. Does this letter relate to a Vigorelli machine?

A. Yes.

Q. Is it a machine similar to the Vigorelli machine, Defendant's Exhibit 149?

A. Yes.

Q. Is this the identical machine? Would you like to see it?

A. You mean——

Q. No. Is it the identical type machine?

A. Yes, yes.

Q. Did you not write as your recommendation to Singer: "Customer selection of cams"——

The Court: Is this paper in evidence?

Mr. Weinstein: It is, your Honor.

The Court: What is the exhibit?

Mr. Weinstein: Defendant's Exhibit 68.

Mr. Klots: Might the witness have a copy of it before her?

Mr. Weinstein: Yes. I am sorry.

Q. Miss Hutton, I will give you a copy. [fol. 1524] I direct your attention to page 3 of the letter, item No. 11, "Customer selection of cams and assembly of cam units is less desirable than built-in performance."

A. Yes, and that is——

Q. Please answer my question.

The Court: You wrote that, did you?

Q. Was that your——

A. Yes, yes.

Q. Was that your opinion of this machine?

A. Yes, in comparison with the 401 machine.

Q. You mean the built-in cam machine?

A. Yes, because the heading of that whole section is "Areas of deficiencies in comparison with 401 Class."

Q. In other words, you consider a machine with a replaceable cam deficient with respect to a built-in multi-cam machine?

A. I consider this particular design of machine with replaceable cams that must be pre-assembled and that require a possibility of six or more dial settings to engage——

Q. Please——

Mr. Klots: I think she——

The Court: Wait, let her finish.

[fol. 1525] A. —I was evaluating the machine as a usable item, not part by part.

Q. Look at page 1, Miss Hutton. Didn't you discuss the six dial settings in item No. 2 separately and apart?

A. Yes, I enumerated them so that when the machine was no longer in front of us, one reading the report would be able to visualize a bit what we were referring to.

Q. It was your opinion, was it not, that whether or not cams had to be assembled, replaceable cams were less desirable than built-in ones?

A. I did not say that.

Q. You say "Customer selection of cams and assembly of cam units is less desirable than built-in performance."

A. Yes, that is what I meant.

Q. In other words, the combination of both features you think less desirable——

A. Yes.

Q. —than built-in performance?

A. Yes.

Q. Wasn't one of those features the replaceable cam feature?

[fol. 1526] A. Yes, one of them is. No feature stands alone in evaluating a machine.

Q. Is a replaceable cam feature a significant consideration in determining whether or not the element is more or less desirable than a built-in performance?

A. The preassembly of replaceable cams was the consideration.

Q. Less desirable than what?

A. This was a comparison with the 401 machine, with the facility of the 401 machine.

Q. When you speak of the 401 machine you mean the built-in?

A. The built-in mechanism, yes.

Q. I refer you to page 3 again, the paragraph headed "Areas of Novelty and Interest".

Did you write:

"The cross feeding facility is new to the home sewer and the bold decorative patterns as well as the automatic monogramming resulting from this feature will attract and interest any customer. The customer who does not weigh all-over performance against novelty will purchase this machine. In the hands of a strong selling organization this machine would sell. I am inclined to believe that a selling organization trained in 'fast-sell' and spectacular demon-
[fols. 1527-1528] stration would do a better job with this machine than the Singer selling organization. We have established a degree of confidence among customers wherein they trust Singer to provide machines with a wide range of decorative performance and yet maintain superb basic sewing performance."

A. Yes.

Q. Was that your opinion of this machine?

A. Yes.

Mr. Weinstein: I have just one more question, your Honor.

The Court: All right.

Q. In the 401 instruction book, Miss Hutton, it reads:

"World's First Automatic with a Slant Needle and Gear Drive".

It also says, "The only automatic zigzag machine for home use made entirely in America, it outsews all other machines in both straight and fancy stitching."

Is that true?

A. Yes.

Q. It is true?

A. Yes.

* * * * * * *

[fol. 1529] New York, June 5, 1961, 11.00 o'clock a.m.

JESSIE HUTTON resumed.

Cross-examination continued.

By Mr. Weinstein:

Mr. Klots: Before you resume, Mr. Weinstein, may I just put on the record, I understand that certain corrections in the transcript have been agreed upon, and this is a list which I will hand to the reporter (handing).

Q. Miss Hutton, when we closed on Friday, I believe you were examining Defendant's Exhibit 149, which is the Vigorelli Fantasy machine.

I would like to ask you whether or not this machine has built-in cams.

A. No, it has removable cams.

Q. I would again like to direct your attention to Defendant's Exhibit 68, the memorandum which you wrote to Mr. Bruder concerning this machine, and ask you whether or not in commenting upon this machine you anywhere in that [fol. 1530] memorandum used the word "fantastic."

(The witness examines document.)

The Court: Have you looked through it, Mr. Weinstein? Did you find the word "fantastic" there?

Mr. Weinstein: No, I did not, your Honor.

The Court: Then we will concede that it is not there. Why make the witness go through it?

Q. Miss Hutton, did you use any language in this letter which is similar to "fantastic"? Did you in any way describe this *man* as a "fantastic machine" or a machine that does remarkable things?

A. My statement was "The cross-feeding facility is new to the home sewer and the bold decorative patterns as well as the automatic monogramming resulting from this feature will attract and interest any customer."

Q. That is the extent of your comments on the novel features of this machine, is it not, as far as pointing it out as being distinctive from the machines that went before it?

The Court: You are really asking the witness to characterize a written document. The Court has read this document and the Court can form its own conclusions. She does point out that it does present an article of merchandise which might be pushed along by a "fast-sell" operation, and [fols. 1530a-1531] that it might offer competition to the Singer machine, properly promoted or promoted by such a sales organization.

I think you are asking the witness to characterize a written document in evidence and therefore your question is objection able and unnecessary.

Q. Referring now to the Brother Flairmatic, Model 190B which is Defendant's Exhibit 150 in evidence—I will show it to you if you like, but I think perhaps you would remember——

The Court: Maybe you had better put it on the stand here so she will have it before her.

Q. I place it before you, Miss Hutton, and ask you whether or not this machine has built-in cams?

A. Yes, it has.

Q. This machine has built-in cams?

A. Yes.

Q. Are the built-in cams in this machine used to vibrate the needle in order to give a zigzag pattern?

A. Yes.

The Court: I did not hear your answer.

Mr. Klots: I didn't hear it either.

The Witness: The answer is yes.

[fol. 1532] The Court: Isn't there a breakdown of the cam mechanism of this machine in evidence?

Mr. Klots: We do not have a breakdown.

The Court: All right.

Q. Can you show us where, in this machine, the built-in cams are located, Miss Hutton?

A. They are built-in.

Q. Where is the control mechanism on this machine?

A. (Indicating.)

Q. I am sorry.

A. Right here, at the top of the machine (indicating). It is the pushbutton.

Q. How do you switch from one cam to the other in order to change your zigzag pattern?

A. You don't.

Q. You don't. In other words, you do not have a built-in multi-cam mechanism for switching from one——

A. That is not what I testified to. You do not have a built-in cam mechanism for switching from one decorative pattern to another. This machine does make a buttonhole automatically. It controls the bight in order to do so; it controls the feed motion in order to do so; it also controls the direction—well, the direction feed is feed motion; and [fol. 1533] needle position in order to do so.

Q. So we do not have built-in cams for the purpose of giving a decorative pattern——

A. No, we do not.

Q. I see. We do have a built-in cam for the purpose of making a buttonhole.

A. Yes.

Q. Did you not testify that that was the most distinctive feature of this machine?

A. Yes.

Q. And the most significant feature of this machine?

A. That is the feature in which this is different from other machines that have been presented in court.

Q. And it is a significant feature.

A. Yes.

Q. If I may refer you back for just one moment to the Vigorelli Fantasy machine, does that have replaceable cams in it?

A. Yes, it does.

Q. In order to make zigzag patterns with the Brother Flairmatic, what mechanism do you use?

A. It is built-in.

[fol. 1534] Q. No. In order to make zigzag patterns, ornamental zigzag patterns, what type of mechanism do you use in the Brother Flairmatic?

A. You operate the controls manually.

Q. It is a manual machine, manual zigzag machine.

A. In the terminology that we are using, yes.

Q. I put before you Defendant's Exhibit 146, Miss Hutton, and ask you whether or not this is the Necchi Supernova machine?

A. Yes.

Q. Can you tell me whether this machine has built-in cams which are used for the purpose of making decorative zigzag patterns?

A. It has removable cams.

Q. It has removable cams?

A. Yes.

The Court: How do you remove the cam?

The Witness: There is a lever at the back of the machine that throws the cam followers off of the riding position. You lift out a stack of cams. There are pre-assembled stacks. There is also a stud onto which the user might assemble cams in different ways in order to produce different stitches. These stitches are charted in the instruction book, the assem-[fol. 1535] bly of cams on separate studs. They have them both ways.

Q. I put before you Defendant's Exhibit 148, the Kenmore Model 90 machine, and ask you whether or not this machine has built-in cams for the purpose of making decorative zigzag patterns.

A. It does not.

Q. You say it does not. Does it have replaceable cams?

A. It has replaceable cams.

Q. I put before you Defendant's Exhibit 147, the Elna-Plana Supermatic sewing machine, and ask you whether or not this machine has built-in cams for the purpose of making zigzag decorative stitches.

A. It does not.

Q. It does not. Is that what you said?

A. Yes.

Q. Does it have replaceable cams?

A. Yes.

Q. Then of the machines I have shown you this morning none of them have built-in cams, do they?

A. Yes, they do.

Q. Built-in cams for the purposes of making decorative zigzag stitch patterns?

[fol. 1536] A. No, they do not.

Q. All except one have replaceable cams, and that one is a manual machine, is that not correct?

A. Which also makes buttonholes of predetermined length.

Q. Do any of these machines have the feature which would enable the operator to simultaneously combine intelligence from two or more cams in order to make new or additional zigzag patterns?

A. Yes.

Q. Which one is that?

A. All of them.

Q. All of them. They combine intelligence from two cams simultaneously, is that correct?

A. Yes.

Q. Would you explain how that works on the Elna-Plana Supermatic?

A. The Elna has, I believe I testified, cam control feed and cam control needle. When stitches are made employing both of these motion controls, two followers are riding on two separate cams which are combined in a single unit and functioning simultaneously.

Q. Do any of these machines——

Mr. Klots: If your Honor please, it is a little difficult for [fol. 1537] us to hear. I wonder if Mr. Weinstein would stand back a little further.

The Witness: I will try to talk louder.

Q. Do any of these machines have a feature in them which enables you to simultaneously combine intelligence from two or more cams for the purpose of vibrating the needle? In other words, the added intelligence of both are directed toward vibration of the needle.

Mr. Klots: If the witness would like to look at the machine again, your Honor, I suppose you would have no objection to that?

The Court: No.

Q. Would you like me to put those machines up there?

A. My reason for hesitation is that this is quite a technical question. I am not positive of the entire mechanical aspects of the cam control needle position. It does limit and determine the point of origin of the swing of the needle. Technically I presume it would be termed as controlling the swing of the needle.

Mr. Klots: I think the answer is obvious, your Honor, that she is just presuming and guessing about this engineer-
[fol. 1538] ing matter.

The Court: Yes. Apparently she states she cannot answer it. She does not feel qualified to answer it.

That is what your answer is, in substance, as I take it?

The Witness: Yes.

Mr. Klots: Then may the last answer be stricken?

The Court: No, we will let it stand.

[fol. 1539] Q. Did you not testify, Miss Hutton, that certain of these machines have three types of cam controls and that one of these cams controls the feed of the machine?

A. Yes.

Q. And that another of these cams controls the pattern and the third controls the amplitude of the needle?

A. I didn't use that terminology, and I don't quite understand what you mean by it.

Mr. Weinstein: Strike that last question, please.

Q. In your opinion, Miss Hutton, was the outstanding feature of the Model 319 Machine a series of five cams which were built-in and engaged by lifting levers at the top of the sewing head?

A. That was the outstanding feature of the 319 in characterizing it as being different from the 306 machine.

Q. And the 306 machine had replaceable cams?

A. Yes, it did.

Q. Were you consulted by any member of the Singer organization concerning Singer's decision to drop the 319 machine in the United States? By "drop" I mean cease production and sale in this country.

A. If one considers adopting another model machine to
[fol. 1540] imply that a previous model should be dropped, I presume it can be inferred that I advised dropping the 319. However, the advice was an affirmative advice in urging the adoption of the 401 which was then termed the 282.

Q. Was the 319, prior to the adoption of the 401, the only multi-cam machine in Singer's line?

A. We are getting very close to dates now. To my best recollection the 282 was adopted as a machine to be manufactured before the 319.

Q. Will you describe the 282 machine, Miss Hutton.

A. The 282 was the experimental number used to describe what was introduced to the public as the 401. The 282 was a job number, an experimental number.

Q. Was not the invention and the availability of the 401 a significant factor in the decision to drop the 319 machine from Singer's line?

Mr. Klots: I don't know what you mean by that.

Q. Can you answer that question?

A. I am not qualified to answer that, no.

Q. You testified just a few moments ago, did you not, that in effect your suggesting that the 401 machine be adopted was tantamount to a suggestion, perhaps, that the 319 be dropped, did you not?

[fol. 1541] A. Yes, but *my* the same token I am not——

Q. Please answer the question. Did you testify in substance to that?

A. May I have it again, please.

Q. I asked you whether or not you just testified a few moments ago to the effect that you considered your suggestion that the 401 or the 282 experimental which turned out to be the 401—whether or not your suggestion that the 401 be adopted was tantamount to suggesting that the 319 might be dropped from the Singer line of machines.

A. I am very sorry. I am lost.

Q. All right. I asked you before whether or not you ever suggested the 319 be dropped, and you said to me, and I may not be quoting you exactly, and please correct me if I don't quote you properly, that if you consider my suggestion that the 401 be adopted was equivalent to a suggestion that the 319 be dropped, then yes. Did you testify in substance to that?

A. Yes, in substance, yes.

Q. That is true, is it not, that in effect your suggestion that the 401 be adopted was a suggestion that the 319 be dropped?

A. Not necessarily.

[fol. 1542] The Court: No, no. You don't place the interpretation on it that the witness apparently desired to have placed on her comments. In substance she says she at no

time recommended that the 319 be dropped, but that someone might infer from that, without reason, that because she advocated the issuance or the marketing of the 401, that therefore it might be said that she took the position that the 401 should be marketed to the exclusion of the 319, but she didn't want to give that picture.

Is that the way you wanted your testimony to be understood?

The Witness: Yes.

The Court: That's the way I understood it.

Mr. Weinstein: As I understood her testimony, your Honor, there was no suggestion that it would be unreasonable for anybody to infer that the 319 should be dropped because the 401 was being adopted.

Q. Do you personally train, or are people trained through people acting under your supervision in the sale of Singer sewing machines?

A. The sale of sewing machines takes in many aspects of a company which merchandises. Our people train others in knowledge of product and presentation of product.

[fol. 1543] Q. To the consumer? Presentation to the consumer, Miss Hutton?

A. Presentation to the consumer and presentation at different levels to a greater portion of the organization.

Q. In training your personnel to distinguish between the 401 and the 403 machine, when speaking to the consumer, what features are emphasized in the 401 machine as opposed to the 403 machine? What is the sales pitch, Miss Hutton, that is to be used in trying to sell the 401?

A. Do you mean in selling one in competition with the other?

Q. That's correct.

A. There is an obvious comparison of the different means of achieving the same thing, and, as I testified before, some people prefer one method of achieving all the operations of sewing and some prefer another method of achieving these operations.

Q. What reason do you give the customer in order to induce him to spend the additional $60 to buy the 401 machine? When he says to you, "What am I getting for my extra $60?" what answer do your sales people give him or [fol. 1544] should they give him?

A. "Let me sit you down and show you both of them." We give the customer an opportunity to use each machine, if she so desires.

The Court: You mean your approach is to let the merchandise sell itself?

The Witness: No. The approach is to let the customer have an opportunity of feel and use, yes.

Q. Not every customer who buys a sewing machine operates a sewing machine, does he, Miss Hutton?

Mr. Klots: I did not hear that question.

Q. Does every customer who buys a sewing machine——

The Court: Not every purchaser is able to operate sewing machines. I suppose that is so. Like, for instance, you might want to buy a sewing machine as a gift for your wife or your mother-in-law.

The Witness: You would be surprised at how many men will sit down and operate a sewing machine, though.

The Court: And you would be surprised at how many won't and don't.

Q. If a customer were to come in to you, Miss Hutton, and show you your ad, which is Plaintiff's Exhibit 200, that full-page ad showing the 401, the 403 and the 404, and say to you, [fol. 1544a] "I want the fully automatic machine as opposed to the automatic machine. What am I getting for my extra $60 when I buy the fully automatic machine?" what answer do you give him?

A. Well, obviously we describe the means for dialing stitches, the built-in cam mechanism.

[fol. 1545] Q. And that is the feature that distinguishes the 401 from the 403, is it not?

A. Yes. That is obvious.

Q. Miss Hutton, you testified that one of the features that you show the customers on your 400 series machines is the elevator throat plate.

A. Yes.

Q. Did you state that the elevator throat plate was a desirable feature because a woman is relieved of the obligation of using a screwdriver on her sewing machine?

A. That is one of them.

Q. And prior to the advent of the elevator throat plate was it not necessary to use a screwdriver in order to lift the throat plate?

A. On Singer machines, yes.

Q. Did you not testify that in order to place the manual zigzag attachment on the Singer straight stitch machine you had to use a screwdriver in order to tighten the lock screw, the lock nut?

A. Yes. It is advisable, unless you have very strong fingers.

Q. It is advisable unless you have very strong hands?

[fol. 1546] A. Yes. However, the screws are located differently and the fabric is not flowing over the top of the screw on the presser bar, and the screws are of entirely different size and different dimension.

Q. You testified that the most significant feature of the Brother Flairmatic was the built-in buttonhole maker, is that not correct?

A. That distinguishes it from the others.

Q. Viewing all these factors, isn't it true that there is a class of women that want the most automatic type of thing in the sense that they don't want to bother with screwdrivers, they don't want to bother with putting parts in and out and making other mechanical adjustments if they don't have to?

A. I don't understand your terminology of "class." If you mean some women will buy that particular machine, obviously, yes, because it is merchandised.

Q. In your experience with the Singer Company and as head of the educational department, haven't you found that it is desirable to design products with the woman in mind who does not wish to go into mechanical operations, who does not want to use screwdrivers and replace parts and go into other mechanical operations? Isn't that a con-

[fol. 1547-1548] sideration?

A. I think that is a modern trend in every industry.

Q. You think that is a modern trend?

A. To give as much convenience.

Q. And there are some housewives that like to follow the modern trend, isn't that true?

A. Yes, and sometimes without knowing why.

Q. But they follow it anyhow, the most fully automatic, isn't that so?

A. Yes, yes.

* * * * * * *

[fol. 1549] Redirect Examination.

By Mr. Klots:

Q. Miss Hutton, at page 1507 and 8 of your cross-examination testimony the Court asked you the following questions and the following answers were given:

"The Court: Does either one of these two machines, the 401 or the 403, perform a function that cannot be performed by both?

"The Witness: Does either one perform a function that cannot be performed by both?

"The Court: Yes, ma'am.

"The Witness: Yes.

"Q. What is the difference?

"A. The 401 can make stitches that we have termed or described as variation stitches and combination stitches.

"Q. Is that because it has a built-in mechanism from which you can select information from two cams [fol. 1549a] simultaneously?

"A. Right."

What I want to ask you is, having regard for that testimony, did you mean by that testimony that the 403 could not make patterns that can be made on the 401 with the two cam followers?

A. No, I did not.

[fol. 1550] Q. Now, isn't it a fact that some of the cams that are furnished as a regular thing with the 403 or can be purchased for the 403, make the same pattern that some combination of the two cam followers on the 401 make?

A. Yes. In fact, any stitch made on the 401 can be made on the 403 with a cam designed to do so and through the operation of a single cam follower.

Q. I show you this paper and ask you what this is.

A. This is a chart prepared to compare the stitches made on the 403 with the existing discs against the 401, to docu-

ment the coding of those stitches for easy reference. This is a chart that we supply to our organization and to schools, especially schools that are equipped with both the 401 and the 403 machines.

Mr. Weinstein: We have no objection.

The Court: Received.

(Received in evidence as Defendant's Exhibit 151.)

Q. Referring to Exhibit 151, I note on the left-hand side is a column which I gather describes whether the particular pattern is made on the 401 by a disc or by a combination pattern or a variation pattern or a primary pattern. What is meant by those terms; what is meant by a primary pattern? [fol. 1551] A. A primary pattern is where one cam follower is operating on a metal disc, a built-in disc.

Q. What is a combination pattern?

A. A combination pattern is made when both cam followers are operating on a metal disc or one is operating on a metal disc and the other on a replaceable disc. There is one more point.

The red lever is at 3.

Q. Then there is another classification here which is entitled "disc". Does that mean those particular patterns are made on the 401 by this removable disc that can be put on the built-in cam?

A. That's right.

Q. Then we come to a variation pattern; what is that?

A. A variation pattern is similar to a combination pattern in every respect except the red lever is not set on 3, it is set elsewhere.

Q. The righthand column represents the number of the disc that is supplied with the 403 that will make a similar pattern, is that right?

A. That's right.

Q. I call your attention to the fact that disc No. 6, which [fol. 1552] makes a scallop pattern on No. 403, that that pattern can be made by a combination pattern on the 401; is that right?

A. That's right.

Q. The same pattern?

A. Yes.

Q. The scallop pattern?

A. Yes.

Q. I call your attention to the fact that a combination pattern may be made on disc 12, the Domino pattern on the 403 which is made by a combination of two of the built-in cams on 401; is that right?

A. That's right.

Mr. Klots: And I think the rest of it is apparent from the chart, your Honor.

Q. At page 1389 of your cross-examination, the Court asked you these questions and you gave the following answers:

"The Court: Do you still sell or does Singer still sell in the American market a straight stitch machine without a multiple machine-carried cam? Do you sell the old-fashioned sewing machines any more?

"The Witness: Yes.

"The Court: The kind that mother used to use?

[fol. 1553] "The Witness: Yes, sir, absolutely."

I ask you whether or not a zigzag attachment can be put upon the kind of machine that mother used to use.

A. Yes, it can.

Q. At page 1403, I want to clear up one thing. You were asked this question at the top of the page:

"Do you sell a straight stitch machine which does not have a zigzag attachment?"

You answered: "Yes."

Did you mean by that that Singer sold a straight stitch machine which could not take a zigzag attachment?

A. I interpreted "does not have" as meaning not having free with the machine, without an additional purchase.

Q. As part of the standard equipment?

A. As part of the standard equipment, yes.

Mr. Klots: I have no further questions.

Recross-examination.

By Mr. Weinstein:

Q. I show you Defendant's Exhibit 151, Miss Hutton. Mr. Klots directed your attention to disc 6, the scallop pattern. May I ask you why there is a line drawn between the

two scallop patterns, a vertical line drawn through the two scallop patterns on this exhibit?

[fol. 1554] A. Yes. To distinguish what is made on the 401 on this side, and what is made on the 403 on this side.

Q. I don't quite understand what you mean by "on this side" and then "on this side."

A. On my left we have a picture of the 401 machine. We have a column describing the setting on the 401 machine, and we have the illustration of the stitch.

On the right we have the 403 machine picture and a column indicating the discs and a column indicating the stitches.

Q. There is also a line separating Ball Patterns and Icicle Patterns?

A. Yes.

Q. Also fagoting patterns?

A. Yes.

Q. There is no other line separating any other pattern on the machine, although you can make both of those patterns on each of the machines, is that not true?

A. Yes.

Q. What is the significance of the line?

A. I don't think I follow you, because it is for separation.

Q. Isn't it true that the scallop pattern made on the 401 [fol. 1555] is different from the scallop pattern made on the 403?

A. Yes, there is a slight difference. I think you will recall that these discs for the 403 are all usable with the 401. The stitch that results from the combination pattern has a slight difference in its configuration. For practical purposes, it is the equivalent in use, in operation, in purpose.

Is that what you are driving at?

Q. The chart indicates there is a difference in those stitches?

A. Yes, it is an acknowledged difference.

Q. You spoke of the term "disc" in testifying about this document. You meant cam, did you not?

A. For public and commercial usage we call these fashion discs, the things we have been calling in court cams, a cam being a more technical term. That is the only difference.

Q. What is the promotional reason for trying to avoid a technical term?

A. That is done in everything one sells or buys.

Q. What is the reason for it, Miss Hutton?

The Court: I suppose it is psychological. What do you want to make out of this witness, a sales expert, a psycholo-
[fol. 1556] gist of sales? I suppose it has a greater appeal to the women.

The Witness: A cam does not have appeal to women.

Q. Because it is a technical term?

A. Yes.

* * * * * * *

CHARLES F. BRUDER, called as a witness by the defendant, being first duly sworn, testified as follows:

Direct examination.

By Mr. Klots:

Q. Where do you reside?

A. Ridgewood, New Jersey.

Q. Are you an officer of The Singer Sewing Machine Company?

A. Yes, sir, I am vice president and a director of The
[fol. 1557] Singer Sewing Machine Company and a director of The Singer Manufacturing Company.

Q. The Singer Manufacturing Company is the company which makes the machines and The Singer Sewing Machine Company is the one which sells them?

A. Correct.

Q. As a vice president of the Singer Sewing Machine Company, what is your specific job?

A. I am in charge of the Consumer Products Division of The Singer Sewing Machine Company.

Q. What is the Consumer Products Division, what does it do?

A. We are responsible for the merchandising of consumer products in the United States and Canada.

Q. When did you first enter the Singer organization?

A. In 1932.

Q. Will you tell us what were the various jobs you have had with The Singer Company.

A. I started as a salesman in 1932. I subsequently became an assistant manager; manager of a store; district manager in charge of a group of seven or eight stores; sales supervisor, which is a job where you are responsible for sales promotion among a larger group of stores, perhaps 30 or 40. [fol. 1557a] I was then a general agent, which means I was entirely responsible for one of the larger company territories, supervising all of the activities for 90 or 100 stores. [fol. 1558] Q. For awhile did you sell something else besides sewing machines?

A. You remember a little incident occurred in December, 1941, which resulted in the discontinuance of the manufacture of household sewing machines.

Q. I assume you are talking of Pearl Harbor and the second World War?

A. Yes, sir. Shortly after that, I was transferred to the Diehl Manufacturing Company, the electrical division of the Singer Manufacturing Company, which had just completed a new plant in Somerville, New Jersey, where our work force was stepped up from some 900 to a peak of 4,000 during the war years, and where we were entirely on war work.

Q. When did you come back to selling sewing machines?

A. I remained with the Diehl company after the war and in 1948 was made a vice president in charge of sales for Diehl. Our primary products being electric motors, fans, portable electric tools and so on. I was transferred back from Diehl Manufacturing Company as vice president in charge of the consumer products division on October 1, 1953.

Q. Since October, 1953, you have been vice president in [fol. 1559] charge of the consumer products division of the Singer Sewing Machine Company?

A. Yes, sir, that's correct.

Q. What are your duties in that office, in that job?

A. I am responsible, aided of course by a staff, for the marketing of all of our products in the United States and Canada, for the supervision of some 1800 retail houses, for the advertising and promotion of those products, the pricing of them, everything that has to do in the broadest sense of

the term with the marketing of our products in the United States and Canada.

Q. Are you talking about household sewing machines?

A. Consumer products. Of course, our primary consumer product is the household sewing machine.

Q. What type of promotion work did you do, for example?

A. Of course, among our direct promotional work with the public, one of the outstanding important things that we carry on is the company advertising program. In addition to that, of course, we do a great deal of promotional work with our own organization. We also do a great deal of pro- [fol. 1560] motional work in cooperation with publications, with such organizations as the Girl Scouts, the Granges, the 4H clubs, women's clubs, schools, colleges. We frequently say, Mr. Klots, that our business is home sewing.

Q. Not just selling sewing machines?

A. Not just selling sewing machines.

Q. What about the schools and colleges, do you carry on any educational work there?

A. Yes, Mr. Klots, it is a very important part of our educational and promotional activities. I think Miss Hutton has already testified to some of the things we do in that area.

Q. Tell us whether or not as part of your job you ascertain what the consumer wants in the way of household sewing machines and what they use sewing machines for.

A. Naturally, one of the most important functions in the overall marketing concept is the determination as to what the consumer wants in a product or what we might devise that we could persuade the consumer she wants.

Q. How do you keep abreast of that?

A. Of course, we have built in to our organization a great [fol. 1561] natural advantage, the fact that we retail our merchandise through our own stores, our own sales organization, the fact that we give considerable instruction in the use of our product, the fact that we have our own servicemen calling at homes, servicing machines, gives us a built-in means of maintaining vast numbers of daily contacts with the public. Through this organization, which is in the field, in the trenches, so to speak, the information which they gather of the public reactions, public likes, public dislikes, preferences are naturally brought back through channels. In addition to that, of course, we use all of the common de-

vices of marketing research, depth interviews, all of the techniques that are commonly used by market men in all fields.

Q. Tell us whether or not it is part of your job to keep track of what your competitors are doing in selling?

A. That is all part of a job of watching our market.

Q. Have you spent any time yourself traveling in the field since you have occupied this job of vice president?

A. I don't believe that any man under our organizational setup can properly carry out the job that I presently occupy [fol. 1562] unless he does spend a considerable portion of his time in the field. There is no substitute for firsthand contact with the organization, and I spend approximately 35 per cent of my time in the field every year.

Q. I think you have already said that you are in charge of Singer's advertising program?

A. Yes.

Q. Do you have anything to say with regard to the development of new machines?

A. Quite naturally again, in a modern marketing organization, the product must be consumer oriented, and the marketing organization is in the best position to advise on customer orientation, likes, preferences, so naturally we have a voice in the development of all our products.

Q. Mr. Bruder, the record in this case already shows that there are different devices employed by different manufacturers of sewing machines which enables the machine to make a zigzag stitch. It shows that there is a manually operated device, replaceable cam device, built-in multi-cam device, a zigzag device that may be attached to a machine that is otherwise used for straight stitching.

[fol. 1563] Q. In marketing machines, do sellers carry these four different devices and divide them into categories?

A. No, it is all one market.

Q. Will all the machines that make a zigzag stitch also make a straight stitch?

A. Yes, sir.

Q. Have you had an opportunity, Mr. Bruder, to observe whether or not all straight stitch machines now being sold can take a zigzag attachment?

A. I have had a great many opportunities. I have traveled the length and breadth of this land and in every respect I

am up to date on the market and what is being offered in the market. All household sewing machines currently being sold in the United States will take a zigzag attachment.

Q. Does that apply to machines made in Japan, straight stitch machines made in Japan?

A. Yes, it does, sir.

Q. The record shows already that Singer itself makes different machines that carry different devices that may be used to sew a zigzag stitch. There is the 401 which uses a built-in multiple cam device, the 403 with a replaceable cam device, and there is the 404 which makes a zigzag stitch with the attachment, does it not?

[fol. 1564] A. That is correct.

Q. Before the 404, did Singer have a machine that was sold with an attachment?

A. Yes, we had a 301 slant needle machine which was sold with an automatic zigzag attachment and, of course, we also had straight needle or automatic zigzag attachments for sale to people already owning all the machines.

Q. I show you this copy and ask you if that is an advertisement which Singer had published in the year 1957?

A. Yes, it is, sir.

Q. And that is an advertisement of what particular machine?

A. This is an advertisement on our famous 301 slant needle Singer with the automatic zigzag attachment, so it can do zigzag stitching automatically.

Mr. Klots: I offer it in evidence.

Mr. Elkins: No objection.

The Court: What is the purpose of this?

Mr. Klots: The advertisement shows that they advertised machines way back at that time, a straight stitch machine that carried a zigzag attachment.

[fol. 1565] The Court: All right.

(Defendant's Exhibit 152 received in evidence.)

Mr. Klots: One thing it says is "Now the famous slant needle Singer does zigzag stitching as well as straight stitching", and another "comes complete with exclusive Singer automatic zigzagger."

By Mr. Klots:

Q. Singer makes other machines that will do zigzag stitching with attachment or otherwise?

A. Yes, sir.

Q. These machines, particularly the 401, 403 and 404, I ask you whether or not it is a fact that all of these different machines could be used in the household to make zigzag stitching?

A. They can be and they are.

Q. Does that apply to both functional and ornamental zigzag stitches?

A. Both functional and ornamental.

Q. Mr. Bruder, the record in this case shows that the 401 machine is the largest seller of all the Singer machines in recent years, and I will ask you if you will explain the reasons for this.

A. I will be very glad to, sir. In the first place, you must bear in mind as background, I might say, to what I would [fol. 1566] like to tell you, that traditionally the Singer organization has always been able to obtain a very substantial portion of the sales in the highest priced machines in the line. That is an historical fact going back ever since I have been in the business. Singer has a reputation for quality. I think it is quite natural that people therefore are going to be interested in the best machines which Singer offers. Traditionally, we have that background.

When the 401 was first brought out, it represented a completely new and different sewing machine in our line. It was not what is sometimes called a Detroit face lifting job. It was a completely new and different machine, offering, as we said, 24 fabulous features, and that machine had placed in back of it the largest Singer advertising appropriation, the largest Singer appropriation for general promotional purposes that we had ever put behind the launching of a new model machine. Quite naturally, we would expect to obtain sales result as a result of that kind of a major effort. You must bear in mind, too, that part of what I just said about traditionally having sold a big portion of our sales in the high end of the line that the salesman is rewarded accord- [fol. 1567] ingly. All of our sales people work on some kind of a commission incentive and the commission on the highest priced machines naturally puts more dollars in the sales per-

son's pocket. You must also bear in mind that the 401 was introduced on the American market in June, 1957, and that it was on the market for almost two years, 20 months, before the 403 was introduced in April of 1959. The 404 was introduced in February of 1959. So our whole organization for over a year and a half, supported by the advertising program and the promotion efforts, which I have talked about, were schooled and drilled and learned to love to sell the 401.

[fol. 1568] Q. I ask you if you have prepared at my request the figures from the books of the Singer Company as to the amount that was spent in advertising, in the first place, the 401 machine, and also the 403 and also the 404.

Does that represent the amount that was spent in those various years in advertising those machines respectively (handing witness)?

A. Yes, sir. This is a tabulation which I had prepared for you from our records.

Mr. Klots: I offer it in evidence (handing).

Mr. Elkins: If your Honor please, may I ask what the source of these figures is; and if they are, as I presume, tabulations, bills and so forth from advertising companies, why this seems to be a secondary piece of evidence.

The Court: It may not be if it is part of the office records regularly kept and maintained by the Singer Company.

Are these figures from the records of the Singer Company regularly maintained by it in the conduct of its business?

The Witness: Yes, your Honor, they are.

The Court: You do not want the actual books brought in, [fol. 1569] do you?

In the light of that answer, I take it your objection is withdrawn.

Mr. Elkins: Are they kept in this form or some other form? If your Honor please, I understand that opposing counsel——

The Court: We do not want to have a lot of books here.

Are these the extracts taken from the records regularly maintained?

The Witness: Yes, your Honor.

The Court: And you have verified this statement against those books and records?

The Witness: I have, your Honor.

The Court: Regularly made and maintained?

The Witness: Yes, your Honor.

The Court: Received in evidence, objection overruled.

(Marked Defendant's Exhibit 153 in evidence.)

The Court: If you want those books we will have them produced, Mr. Elkins, to cross-examine the witness.

. . . . . .

[fol. 1570] By Mr. Klots:

Q. Do you have figures there which would show the totals, Mr. Bruder?

A. Well, I have them by years.

Q. Yes. How much was spent, for instance, the year 1957 on advertising the 401?

A. Well, the year 1957 was our launching year.

The Court: The break in year of the new product.

The Witness: That is right, sir.

[fol. 1571] The Court: It is natural to spend more money then.

The Witness: That is right. You use that to give it its initial impetus. You put a very large effort in to launch it, and we spent $2,145,000, in round money, in just launching the machine in 1957.

We spent 1,270,000 in 1958, and we spent 1,343,000 in 1959, and 1,399,000 in 1960.

So actually our level in the three years following the launching is substantially the same, and actually slightly higher in 1959 over 1958, and 1960 over 1959.

The Court: Your budget called for about one million three in subsequent years.

The Witness: You have it exactly, sir.

Q. Now, Mr. Bruder, I show you this document and ask you what that is (handing witness)

A. This was one of the first advertisements on the 401 when the machine was launched in 1957.

Q. That is an exact copy, of the color and everything?

A. That is an exact copy of the advertisement that ran in the Ladies Home Journal, McCall's, Good Housekeeping, Woman's Day, and so on.

[fol. 1572] Mr. Klots: I offer it in evidence (handing to Mr. Elkins).

(Marked Defendant's Exhibit 154 in evidence.)

By Mr. Klots:

Q. Now I will also ask you what this sheet is (handing witness).

Is that another advertisement that was issued shortly after the 401 came out?

A. This is another photostat—or this is a photostat of another advertisement that we used early in 1958 for the 401.

Mr. Klots: I offer it in evidence (handing).

Mr. Elkins: In relation to that exhibit, it seems to have typing on it. It is a printed advertisement with typing on it. I do not understand the typing.

Is that part of the exhibit?

Mr. Klots: Yes. I will ask the witness what the typing on the bottom of this exhibit means (handing).

The Witness: This is merely a record of the magazines in which this advertisement was run.

Mr. Elkins: No objection.

(Marked Defendant's Exhibit 155 in evidence.)

[fol. 1573] By Mr. Klots:

Q. I have one other ad that came out in 1957, Christmastime, after the launching of the 401 machine.

Is this a copy of an ad that was published about Christmastime (handing witness)?

A. Yes. This is a color proof of an ad which we published in many of the Christmas issues, the December issues which are usually out late November in the magazines, listed in the box here at the bottom.

Mr. Klots: I offer it in evidence (handing to Mr. Elkins).

Mr. Elkins: No objection.

(Marked Defendant's Exhibit 156 in evidence.)

By Mr. Klots:

Q. I notice, by the way, Mr. Bruder, in this last exhibit there are various other machines which are advertised on the same sheet as the 401—pictures, to be sure.

What is this machine, the upper left, one of those four small pictures, "Popular slant needle Singer"?

A. That is the 301.

Q. I see. That is the one we were talking about previously?

[fol. 1574] A. With the zigzag attachment, yes.

Q. These machines will take zigzag attachments?

A. Yes.

Q. Now if you will look at the original launching ad, this big one, which is Exhibit 154, I notice in the first place that it is named "Slant-O-Matic".

What is the significance of that word? Why is the word "Slant" in there?

A. Well, the significance of that name, Mr. Klots, is that for the first time a sewing machine was being placed on the market which incorporated both the slant needle and swing needle feature in one machine, hence the name of the machine to identify it and give it that distinctive term.

Q. Now then it says—and I quote from this Exhibit 154 "This is the Singer Slant-O-Matic. Exicitingly new. New in its almost unbelievable ease of operation . . . new in the fine, sure beauty of its stitching . . . new in introducing convenience features never before built into a machine:"

I ask you, sir, what was meant by "almost unbelievable ease of operation", and what was meant by "introducing convenience features never before built into a machine"?

[fol. 1575] A. Well, Mr. Klots, perhaps I should start by saying that while there may be a certain amount of what is commonly called advertising puff in the copy that goes with that, I honestly believe that the claims made for the machine are based in fact. Looking at this machine, the first attractive feature, and the one that gave it its name, is the combination of the swing needle with the slant needle.

Q. What is the advantage of the slant needle?

A. Mr. Klots, the slant needle was first actually developed and used on some of our industrial sewing machines. Now while it may be true that you can develop a so-called feature that lends itself to merchandising, to the average consumer, the industrial sewing machine buyers are a far more sophisticated lot. It is their business to make sure that the equipment they are buying does the best possible job for them.

The slant needle feature was first developed and used and proved of practical value on industrial sewing machines.

We then incorporated it in our 301 where it was supported by a great deal of advertising and promotion. It was popularized as the machine at which you sit better, see better, sew better.

[fol. 1576] Q. What is the point—so that you could see the stitching better?

A. It gives the operator of the machine a more comfortable posture while she is still able to visualize her work at the point where the needle enters the cloth. The rake of the needle bar moves that point slightly over an inch closer to the operator than a conventional straight needle bar.

Q. All right. You were going to tell us what was meant by the "unbelievable ease of operation" and "convenience features never before built into a machine".

A. Well, I think as has already been brought out, but it certainly bears reemphasizing, the position of the rotary hook with the bobbin in front of the needle bar, with the fixed bobbin case so that changing the bobbin is merely a matter of pulling a slideplate towards you, removing the bobbin and dropping another one in, certainly contributes to the ease of operation of this machine.

[fol. 1577] Q. And there are little pictures of the slant needle and also dropping in the bobbin on the slant sheet, are there not?

A. That's correct.

Q. And there is another picture there. What is that?

A. There is a picture here which shows that in addition to the slant needle—or it says that in addition to the slant needle that this machine has a gear motor drive.

Q. Yes.

A. This again was another first—the first time a swing needle machine had a gear motor drive with a matched speed controller, which gives this machine the best control of a total range of speeds of any swing needle machine that we have ever seen.

Q. All right Give us some more.

A. This definitely contributes to ease of operation for the operator.

Q. Yes. What else?

A. This machine, again, first, was made completely of

diecast aluminum housings, thereby greatly reducing the weight of this machine. At the same time your diecast aluminum housing gives you clean surfaces and contours [fol. 1578] which are readily kept clean compared to cast iron, for example, and when one bears in mind that approximately half of the household sewing machines sold in the United States are so-called portables, the weight of the machine becomes a very important factor for most women. Even where the machine is used in a cabinet, the weight of the head has a great bearing, of course, on the ease with which the head can be raised and lowered in the cabinet.

The machine offered for the first time the elevator throat plate, and again, as I believe has been brought up before, this throat plate can be elevated, depressed or removed and replaced with another throat plate without the use of a screwdriver and removing two screws.

Q. What about the flip-up pattern chart and dial for changing patterns?

A. Naturally the eye-level stitch selection chart and the dial for selecting the stitches was a feature of this machine which lent itself to advertising and promotion—lends itself to sales talk, lends itself to a glamorous, attractive demonstration, and naturally it has been pushed as one of the many fine features of this machine.

[fol. 1579] Q. Did you mention micro-stitch length control?

A. That, again, was another first. We developed what we called the micro-stitch length control, which particularly in the area of fine stitching, where you want to pack a great many stitches in a square inch, lends itself to very precise adjustment.

I think there has been earlier discussion about getting pattern density. We believe that this microstitch control makes it easier for the operator, contributes to her ease of operation in getting the exact stitch length that she wants.

Q. What about the dial tension? How do you go about that?

A. We believe that our dial tension is superior to any tension used on any sewing machine on the market today.

There are other tensions which I think, as has been brought out, do not protrude as much from the machine, but I know of no tension that gives better control of the thread than the Singer single-turn dial tension. There are

other features which contribute, such as the safety thread cutter, the threading chart which is in the face plate of the machine.

This all contributes to ease of operation.

[fol. 1580] The claims made in this ad were legitimate claims, bringing out a number of the wonderful features of this fine machine.

Q. I call your attention to Exhibit 155, which is the other ad, and I ask you if that does not list on the righthand side all of these various features that you have mentioned, or most of them (handing).

A. I think it mentions all of the features that I have mentioned—and there are others, of course, that we could talk about, but space limitations sometimes prevent that.

Q. I notice on Exhibit 155 that there is a list of features on the righthand side. The top one listed is "Only zigzag sewing machine with Slant-Needle for better vision, precise stitching."

The next one is "Exclusive 'drop-in' bobbin in front of needle"—you mentioned that, didn't you?

A. Yes.

Q. The next one in the list of "Fixed bobbin case—prevents dropping, chipping." Did you mention that?

A. I think I spoke of the fixed bobbin case and the drop-in bobbin together.

Q. The next one is "Exclusive elevator throat plate raises by finger-tip control—no feed to drop for darning and [fol. 1581] embroidery, no tools needed for cleaning, superior fabric handling."

I think you mentioned the throat plate, did you not?

A. Yes, sir.

Q. And the fifth one on the list of "'Tune-in' knob for instant change from straight stitching to hundreds of decorative stitches, buttonholing, overcasting, zigzag seaming."

I think you mentioned that.

A. Correct.

Q. And so on—and there are other things that you mentioned?

A. Right, sir.

Q. Now having listed these features, Mr. Bruder, what would you say were the most important of these features from the housewife's point of view?

A. I just realized I did not list the most important feature of all—the most attractive thing about this sewing machine, the most valuable feature is that name right there, "Singer".

Q. Yes, we all know that.

A. That's true.

* * * * * * *

[fol. 1582] Q. What would you say are the two most important features about this machine?

A. Certainly the most important feature is the combination of the slant needle-swing needle from which the machine took its name Slant-O-Matic.

Q. Yes.

A. And coupled with that is the second most important feature which I would say is the convenience of the drop-in bobbin, the full rotary hook, which means you can run speeds up to 1400 stitches per minute, with almost complete lack of vibration and convenient access to that bobbin at all times.

[fol. 1583] Q. Mr. Bruder, in your experience with the selling of sewing machines in the market did you ever hear anyone claim that there was a separate slant needle market?

A. No, sir, I never have.

Q. Did you ever hear anyone claim that there was a separate "drop-in bobbin in front of the needle" market?

A. No, sir.

Q. I have two other ads, two beautiful ladies here, that I think we might introduce, and just to bring this advertising up to date, I ask you what this sheet is (handing).

A. That is one of the many, we think, attractive ads which we ran in connection with our 401 Slant-O-Matic where we stress, as you will see from the copy of the ad, the advantages of zigzag sewing, and we try to glamorize it and make it appealing and dramatic and attractive to the average housewife through the use of an attractive model.

Q. What year was that?

The Court: That also helps appeal to the husband of the housewife, too.

The Witness: It doesn't hurt any.

Q. What year was that published?

[fol. 1584] A. This ad was run last year, summer and fall of last year.

Mr. Klots: I would like to offer this beautiful lady in evidence.

Mr. Elkins: No objection.

(Received in evidence as Defendant's Exhibit 157.)

Q. Now I would like to show you this and ask you if this is another advertisement that was published in the fall of 1960 in the magazines indicated.

A. Yes, this is another one similar to the one that you just introduced, again featuring a very attractive lady up against an outsized 401 Slant-O-Matic. "What is the Newest Slant off Holiday Sewing?" Perhaps you don't regard it as a very good pun of words, but the copywriters liked it.

Q. She is in a mauve dress, I believe.

A. Oh, yes.

Mr. Klots: I offer that in evidence.

Mr. Elkins: No objection.

(Received in evidence as Defendant's Exhibit 158.)

* * * * * * *

[fol. 1585] Direct examination continued.

By Mr. Klots:

Q. We have been talking, Mr. Bruder, about this 400 line or series, I think you call it, of machines. The 401 is the highest priced of these machines, is it not?

A. Yes, sir.

Q. And it was the first one to come out?

A. Yes, sir.

Q. And that was with the built-in cams. And the 403 is the one with the replaceable cams, and the 404 is the one with the zigzag attachment.

A. Yes, sir.

Q. It has been pointed out that the 403 incorporates many of the features found in the 401 machine, including the slant needle, the numerous replaceable cams that make a variety of zigzag lines, et cetera, that it is really a multi-cam

machine although the cams are not built in. How do you [fol. 1586] account for the smaller number of sales of the 403 since it came out than of the 401, particularly in view of the fact that it sells for $60 less?

A. Well, as I think I testified this morning, sir, the 401 was introduced first. We have spent a great deal of money advertising and promoting the 401 Slant-O-Matic. Singer salesmen traditionally like to sell the highest price machine in the line because it means more commissions for them. Singer is known and has been for a hundred and ten years, as a maker of a quality product. There are buyers who like to buy the best. Some buyers who like to buy the best buy it on the basis of the highest price without regard to anything else. There are actually people who will do that. There are other buyers who truly want to buy the best and expect and accept that the highest priced product will be the best.

The Court: You mean they are sort of prestige buyers, people who, when they buy something, want to exhibit to their friends that they have the highest priced machine.

The Witness: That is right, your Honor. That is what—— [fol. 1587] The Court: Prestige buyers.

The Witness: That is the first class of the high priced buyer, the prestige buyer who wants to buy it for prestige because it is the highest price. Then you have the other kind of a best buyer who really wants to buy because it is best. You have two psychological elements there.

Q. Exhibit 153 shows that you spent in 1959 $544,000-odd in promoting the 403 or advertising the 403 and you spent $1,343,000 in advertising the 401, is that right?

A. That is right, sir.

Q. And in 1960 you spent $121,000 in advertising the 403 and $1,399,000 in advertising the 401, is that correct?

A. Yes, sir.

[fol. 1588] Q. These figures, by the way, I think you said you confirmed or checked them with your bookkeeping department. You mean by that that you got the figures from them?

A. The Controller's Office at my instruction, working with the tabulations kept by our Advertising Department, assembled these figures for me at my instruction.

Q. You did not mean to say that you actually looked at these books yourself?

A. No, sir, no. If there is any question about that, I did not examine the individual entries.

Q. As far as the sales of the 403 are concerned, have they been increasing since it came out, or decreasing?

A. The sales of the 403 have been increasing.

Q. I call your attention to Exhibit S-24, which is an exhibit attached to the stipulation of facts in this case.

Am I right in pointing out that the sales of the 403 in 1959—that was the year it came out, was it?

A. The 403 was introduced in April 1959.

Q. The sales that year were 50,269.

The sales in 1960 were 88,553.

A. From memory, that sounds right, if I may just verify [fols. 1589-1590] the figures.

(Document handed to the witness.)

A. Yes. Let me see. 1960 was the first full 12-months sales of the 403.

Q. Yes, I see. Now when was the 404 machine, which is the straight stitch machine that is sold regularly with a zigzag attachment—when did that come out?

A. That was placed on sale in January 1959.

Q. A little bit before the 403 was put on sale?

A. Four months ahead of the 403, but the 404 was not advertised until we had the 403 on sale also.

Q. So both of these machines were launched a year and a half to two years after the 401 was sold on the market?

A. Correct, sir.

Q. Now before the 404 was put on the market, I think the testimony already shows that the Singer 301 was the straight stitch machine that you were selling most of; is that right?

A. That's right, yes.

• • • • • • •

[fol. 1591] By Mr. Klots:

Q. Does this Exhibit 159 show not only the sales of the 301 but the 404 and other Singer machines as listed?

A. Yes, sir.

Q. Now, Mr. Bruder, what do you sell—what does Singer

sell the 404 for, together with the zigzag attachment and carrying case?

A. $189.50.

Q. Do you know any machines on the market in the United States with built-in cam devices for changing zigzag patterns that sell on the same price level or less?

A. Yes, sir. There are a number of machines, or several [fol. 1592] machines.

Q. Does your 404 machine compete with those machines?

A. Yes, sir, it does.

Mr. Klots: If your Honor please, I propose to offer in evidence now certain charts which are based on these figures that have just gone into evidence.

The government already has had copies for about two weeks.

Mr. Corcoran: Which charts?

Mr. Klots: These are the ones I am going to offer.

Mr. Corcoran: I do not have those.

Mr. Klots: Yes, you do—I am sorry, I thought you had copies of the charts.

You have had the figures on which they are based, have you not?

The Court: Are these graphic representations of what is already on this exhibit which has just been marked in evidence?

Mr. Klots: Yes.

The Court: This just graphically represents what is statistically recorded on the last exhibit?

Mr. Klots: Precisely.

[fol. 1593] The Court: And you offer that in evidence as being graphic representations, do you?

Mr. Klots: I do.

Mr. Elkins: No, your Honor, not as put in.

The Court: Any objection?

The Court: All right. Received in evidence. Mark it in evidence, Mr. Clerk.

(Received in evidence as Defendant's Exhibit 160.)

Mr. Klots: I might just point out, your Honor, this blue bar (Indicating)—that represents the sale of the 401 machine in 1958, plus the 319, which was also a built-in multicam machine.

This bar represents the sales of the built-in multi-cam machines in 1958 (indicating).

The Court: Indicating a blue bar to the extreme left of the exhibit as you look at it.

Mr. Klots: Now I will indicate next the gray bar, which is marked 301, 1958, which is the straight stitch machine sold by Singer with a zigzag attachment. That is this gray bar (indicating), immediately next to the blue.

Then I will indicate the next one is a little one, the 306. That was the Singer replaceable cam device machine that [fol. 1594] was being sold in 1958.

In 1959 you will see that the sales of the 401 were a little bit more, but not a great deal more.

You will see that the 404 came in, and together with the 301, which was still being sold in a considerable amount, the amount of the straight stitch and zigzag attachment sold. Then the 403 came in, which is that green bar (indicating)—the green section of the third bar, which added to the 306 machine, which was a replaceable cam machine, also shows how many were sold in 1959.

Then the interesting thing is in 1960, when the 404 and 403 had been out for a year or a little more than a year, you will see how the sales of the 404 and the 403 are catching up with the 401—the 401 remaining reasonably static, whereas these are catching up.

That is the purpose of the chart.

[fol. 1595] The Court: Do you attribute this increase in sales of the 404 partly to the economic conditions, people looking for a replaceable item or replacing an item at a lower cost, if available?

* * * * * * *

The Witness: Yes, in part I would say that that was true, but there are also many other factors that entered in, your Honor. The machines had been on the market longer, we had done advertising on them, we have emphasized in some of our advertising that we have a line of machines, a machine for every purse, the broad appeal. A broad line helps, of course. But, to specifically say that recession influenced it and to what extent, I don't know. I agree that I think it did have some bearing on it.

The Court: But in your advertising did you present the

401, the 403 and the 404 as being a group of three sister machines, all of which would perform substantially the same [fol. 1596] function?

The Witness: Yes, that is true. Companion machines, I think we called them.

The Court: You called them sister machines.

The Witness: And sister machines.

The Court: In your advertisement that I have before me, Exhibit 200, you said "The great Slant-O-Matic has two talented new sisters."

The Witness: Right.

Mr. Klots: I would like to present another chart here which is also based on the figures that have recently been received in evidence. The purpose of this chart is to show the relation of these number of sales to the amount spent in advertising.

. . . . . .

[fol. 1597] (Received in evidence as Defendant's Exhibit 161.)

The Court: What inference would you have the Court draw from this exhibit?

Mr. Klots: I would have the Court draw an inference from the fact that, even though these great amounts were spent consistently for advertising the 401, the replaceable cam [fol. 1598] machine and this straight stitch with the zigzag attachment with the small amount of advertising were nevertheless catching up and increasing in number and popularity.

The Court: Even though you tried to marry off the oldest sister, the other two were making better progress even though you didn't spend as much money on them.

Mr. Klots: That's right.

The Court: All right, I understand.

Mr. Klots: We have one more chart here which is based on this last exhibit that went in, and, just to make the record complete, this is the chart showing the sales of all Singer household sewing machines for the years 1958 to 1960, to make this record complete, to show what the market was so far as Singer was concerned, and I offer it in evidence. I don't want to make a particular argument about it at the

moment, except that there again it shows the 401 with about the same number and the 404 and the 403 catching up.

* * * * * * *

[fol. 1599] Mr. Elkins: We have no objection, your Honor, with the understanding, of course, that it merely attempts to picture what is set forth in Defendant's Exhibit 159, and in relation to Defendant's Exhibit 159 I take it that the figures there relate to sales of these Singer sewing machines in the United States, is that so?

Mr. Klots: That is correct.

[fol. 1600] (Received in evidence as Defendant's Exhibit 162.)

Mr. Elkins: So that there will be no mistake as to this being merely a graphical representation of the figures reflected in Defendant's Exhibit 159, we notice how, for example—excuse me, Mr. Klots, is there something down at the bottom of the 401 machine for 1959, down here, down at the base of the column?

Mr. Klots: I think there is a little hangover of the 319.

Mr. Elkins: I see. Go ahead.

Mr. Klots: I find that in order to complete the advertising figures I should offer this exhibit which has the advertising figures on the 301 and the 306 as well as the other machines.

By Mr. Klots:

Q. I ask you if that information was procured by you in the same manner as you procured it on the other machines.

A. Yes, sir.

Mr. Elkins: In relation to this exhibit, your Honor, as I understand it from later testimony of this witness, he has nothing to do with the advertising department, doesn't know how the advertising department allocates the cost of the various advertising expenditures to the 301, the 404 and the [fol. 1601] 403, and consequently he is not qualified to say or to testify as to what amount of money was spent in advertising any one of these machines.

The Court: He has testified that he personally has nothing to do with that feature or department of the business. However, he has testified that he had the accounting department

or the comptroller's office examine their books and records, regularly maintained in the conduct of their business, and prepared a schedule setting forth the information it recites. He says that has been done and he has been assured that it was done accurately, truthfully and completely.

Now, technically speaking, if you want somebody brought here from the comptroller's office to testify that they did it, we will have another witness.

. . . . . .

[fol. 1602] The Court: Do you want to put the Court to the burden of hearing all that proof? Do you feel that that is necessary?

Mr. Elkins: Well, may we reserve an answer to that, your Honor?

The Court: I will give you my answer now. It is received subject to connection.

[fol. 1603] Mr. Klots, if you don't get the concession, you will have to bring somebody in here from the comptroller's office who either made it or supervised it. I am sorry, but I believe in disposing of these things without deferring decision. Received in evidence subject to further proof.

(Received in evidence as Defendant's Exhibit 163.)

The Court: You will have to bring in somebody from the comptroller's office, if necessary.

Mr. Elkins: That is, if we make a motion to strike, your Honor.

The Court: No. Either you tell me you don't want that proof tomorrow or the next day we sit, or Mr. Klots will bring him in. On this I am not going to leave a motion to strike hanging in the air.

All right, received now in evidence subject to further proof to come later.

By Mr. Klots:

Q. Mr. Bruder, does Singer advertise all three of the machines, the 401 machine, the 403 and the 404, as being capable of doing zigzag stitching?

A. Yes, sir.

[fol. 1604] Q. I show you this and ask you if this is a typical ad that does that (handling).

A. Yes, that is a mat for a newspaper ad—or the proof of a mat for a newspaper ad, advertising all three machines.

(Mr. Klots hands document to Mr. Elkins.)

Mr. Elkins: We object to this. It seems to have been described by the witness as an advertisement which tells the reader that each of the three machines do exactly the same thing, and on its face it just isn't so.

The Court: That is a question for the Court to decide.

Mr. Klotz: That is not the question.

Mr. Elkins: I mean——

The Court: This paper which has been offered in evidence, is there a time indicated—6/60—that is June 1960?

The Witness: Correct.

The Court: And what is this notation on the bottom—what does that mean?

The Witness: That is the mat number.

The Court: Newspaper mat?

The Witness: Newspaper mat number, and this describes [fol. 1605] 300 lines for three columns, 900 lines, et cetera.

The Court: And was this advertisement used by Singer in June 1960?

The Witness: This is a mat which was prepared by our Advertising Department and distributed to our central agencies who have their own advertising budget for local newspaper advertising.

The Court: Do you know whether any advertisements were published from these mats that you circulated?

The Witness: I cannot testify specifically when and where the local agencies used these mats.

The Court: Did your local agencies put these mats to actual use? Do you have any newspaper reproduction of this?

The Witness: I have not seen the tearsheets on this, your Honor.

Let me explain, if I may, that our agencies have authority within their budget to place local newspaper advertising. They do not have authority to compose their own advertising copy. They must use company-approved mats

which are originated by our Advertising Department and distributed for them to place locally within their budget. [fol. 1606] I frankly would have to assume that this mat was used by some of our agencies in some newspaper, as all of them are, to my best belief.

The Court: But you do not know whether this was actually used?

The Witness: I couldn't say.

The Court: Mark it for identification.

In light of the objection, you will have to bring in some testimony, if you feel it is important, to show that the mat was in fact used.

(Marked Defendant's *Exhibit 164 for identification.*)

Mr. Klots: I call your attention, your Honor, to the fact that in Plaintiff's Exhibit 200, all three of these machines are advertised as being zigzag machines.

The Court: I have observed that but Exhibit 200 was received in evidence by consent, as I recall it.

Mr. Klots: Yes. I am not suggesting that that is the reason for letting this in.

Mr. Elkins: If your Honor please, the witness, in referring to the advertisement and the mat just marked for identification, as I recall his testimony, he testified that this was an exhibit which demonstrated that Singer advertised the three machines in question as doing exactly the [fol. 1607] same thing.

Mr. Klots: I do not think that is.

Mr. Elkins: As such, we object.

The Court: No. The witness testified that this was a newspaper mat sent out by Singer as one which was authorized by Singer to be used by its agencies for newspaper advertising.

Mr. Klots' purposes, as an attorney here, he wants the Court to note that Singer represented these three machines as serving the same relevant market and as being a fulfillment of an identical purchaser purpose.

Mr. Klots: The question I asked was whether they were all advertised as doing a zigzag stitch.

The Court: Well, the advertisement is the best proof of what it contains.

You will have to show, Mr. Klots, that this mat was put to actual use.

Mr. Klots: All right, sir.

The Court: If you can do it, I will take it in evidence.

Mr. Klots: Thank you.

Q. Can you tell us, Mr. Bruder, whether the combined sales of the 404 and 403—how do they compare with the [fol. 1608] sales of the 401?

A. The combined sales of the 403 and the 404 substantially exceed the sales of the 401.

Q. Now you say that the 403—there has been a good deal of testimony attempted to be brought out that the 403 and 404 have many of the same features of the 401, except for this method of pattern selection.

I want to ask you this. How did this happen, Mr. Bruder, that in designing these cheaper machines, the 403 and the 404, Singer left out that particular feature from both these machines?

A. In making our sales plans for the 401 and in consideration of the price point which we established at which we wanted to sell the 401, we realized that we could not sell a sufficiently large quantity of machines at that price point to get us the volume which we wanted to obtain, both from the point of view of sales and the manufacturing problem.

Therefore, the decision was made to produce two companion or sister machines based on the Johnson design. The problem was, having established different price points for those two other machines, to have sufficient differences in them so that the salesman could differentiate and justify a price difference if he were compelled to do so.

[fol. 1609] At the same time we had to bear in mind the manufacturing problem, which was to produce this line of machines with the greatest possible number of common parts in order to achieve optimum manufacturing efficiency.

Therefore, the 401 incorporated the built-in multi-cam feature and its means of swinging the needle.

The 403 is the replaceable cam method or device for actuating the work bar, and in the 404 the zigzag attachment which actuates the needle is the means of producing the zigzag stitch.

Q. Go ahead, complete your answer.

The question was, how did you come to leave off the particular feature that you did leave off?

A. Because—I tried to answer that—because we had to keep the fundamental root in this line of machines, both because of the manufacturing problem and the fact that at the prices we selected for the companion machines we could not make any changes which would inherently affect the characteristics and the fine quality of this fine line of machines.

Q. What do you mean by the fundamental root that you wanted to preserve?

A. The fundamental root was a die cast machine with [fol. 1610] a slanted needle bar construction, and with a common loop-taking mechanism, fixed bobbin case, drop-in bobbin, gear motor drive, die cast.

These were the fundamentals of the machine which gave this line its fine quality and performance.

Q. Why didn't you eliminate the slant needle feature in the cheaper machine, for instance, if you wanted to eliminate one feature but sell it cheaper? Why didn't you eliminate the slant needle?

A. In the first place, if we had eliminated the slant needle we would have eliminated a prime selling point for this line of machines.

In the second place, we would have destroyed the common part concept. If we had gone, for example, on one of these machines to the straight needle construction, it would change practically all of the parts. We would have lost that common part advantage.

Q. Are you saying that by leaving off the built-in cams and the dial to change the patterns—you are saying that that did not involve any fundamental change in the construction?

A. That's correct.

Q. Now, Mr. Bruder, what have you to say as to the bearing of this knob or dial method of changing patterns [fol. 1611] with respect to the ease of operation of this machine?

A. The tuning knob or dial is a feature which we have advertised and promoted, trained our sales organization to use as one of the selling points of this sewing machine.

Naturally we present it in as glamorous and dramatic a fashion as we can.

At the same time, as I think Miss Hutton has also testified, there are people who believe that a replaceable cam machine is easier to use than the so-called tuning dial which actually consists, as you know, of two dials in one—there are two settings to make with that dial.

Q. Is it your opinion, Mr. Bruder, that any machine which does not have a dial or knob for choosing patterns is able to compete with machines which do have that feature?

A. Why, of course.

Mr. Elkins: I object, your Honor.

The Court: He is just expressing his opinion as an expert. I will take it as an expert.

Objection overruled.

Mr. Klots: Your Honor, I would like to offer in evidence here—this was originally got up as a stipulation, but I now [fol. 1612] offer it as an exhibit—sheets torn from genuine original advertisements, catalogs of some of the biggest sellers of sewing machines in the country.

The government has had these copies for some time. We have actually in court here many of the catalogs that have already been sent on, from which these sheets were torn—I am talking about Montgomery Ward, Sears, Spiegel, Alden's—which show the types of machines they sell.

The purpose is to show that all these machines are being sold competitively. The purpose is to show, among other things, that the Sears people, for instance, although they used to sell the multi-cam machine, they dropped the multi-cam machine and now sell the replaceable type.

I realize that we ought to have somebody from Sears or Montgomery Ward, if the government insists, but otherwise they certainly look like genuine sheets from these catalogs.

The Court: You offer them in evidence as being copies of advertisements published at the dates given by the sewing machine retailers?

Mr. Klots: That's right.

[fol. 1613] The Court: Do you have any objection to these being received in evidence, Mr. Elkins?

Mr. Elkins: Yes, we do, your Honor.

The Court: So far as authenticity is concerned?

You do not dispute that these are actual copies of advertisements, actually published by reputable and known retailers, do you?

I understand, Mr. Klots, that you do not offer these advertisements in evidence as being proof of the truth of the contents contained in these advertisements.

Mr. Klots: No, sir.

The Court: You offer them simply in evidence as advertisements of sewing machine retailers?

Mr. Klots: Exactly, showing the variety of machines that are being advertised.

Mr. Elkins: I do not know if opposing counsel said anything about the method of selecting those advertisements that would appear in this heap of material or not.

The Court: He did not say a word about it; he says, "Here is a batch of advertisements that we gathered together from copies of actual advertisements that we have gathered together. We would like to offer them in evidence."

[fol. 1614] Mr. Klots: And there is a list which goes with them, which shows when the particular catalog from which the sheet was torn was distributed in the United States.

Mr. Elkins: Well, I suggest they have not been fully described. I do not see how they could possibly go in, your Honor, without some testimony from the person responsible for their selection.

The Court: The only way they could come into evidence would be a concession by the government, that if a witness were called by Singer, that witness would testify that he examined various catalogs, various advertisements and files and other sources of information, and that these are tearsheets of actual advertisements of these companies.

Mr. Klots: These are the pages which advertised sewing machines in those particular catalogs.

Mr. Elkins: We object to them, sir.

The Court: You won't concede it.

You will have to get somebody in to testify—the man who gathered these together.

Mr. Klots: May I have these marked for identification?
The Court: Yes.

[fol. 1615] (Marked Defendant's Exhibit 165 for identification.)

The Court: Unless this witness himself has knowledge of each one of these advertisements and will tell me or will testify that he knows of his own knowledge that these are the advertisements that he saw published by various manufacturers—if he will do that, I will take it into evidence on his testimony.

Mr. Klots: I will ask him if he did, but I do not know that he can say that he saw every one.

Q. Did you see these particular advertisements? I will show them to you.

The Court: As the man in charge of sales, probably he did.

(Documents handed to the witness.)

Mr. Klots: This is the type of catalog, sir (indicating).
The Court: I am familiar with them.

A. Every year I receive in my office copies of the Montgomery Ward and Sears Roebuck catalogs. I examine those pages with reference to their sewing machines-vacuum cleaner advertising particularly.

Some of the pages which are here I believe have been removed from catalogs which were in my office. Some were [fol. 1616] obtained in Chicago. This is like old telephone books. I do not keep them around year after year. I frequently just tear the pages that are applicable out and discard the catalog. But quite naturally we keep aware of what these two big retailers, Montgomery Ward and Sears Roebuck, are advertising in their catalogs.

The Court: Are these only Montgomery Ward and Sears?

Mr. Klots: No, there are two others. They have Alden's and Spiegel.

The Court: Alden's and ——

Mr. Klots: Spiegel.
The Court: Spiegel.

The Witness: Formerly Spiegel-May-Stern, and it is now called Spiegel's.

The Court: That is a mail order house?

The Witness: That is a mail order house.

The Court: And Alden's is a mail order house?

The Witness: Alden's is a mail order house.

The Court: Sears Roebuck is a mail order house?

The Witness: Mail order and retailers.

The Court: And Montgomery Ward the same?

The Witness: Mail order and retail.

The Court: We will have it marked for identification.

[fol. 1617] Bring somebody in from the Advertising Department who will testify that they have checked this against it, since you cannot get the concession—that will be another witness that we will have to listen to unnecessarily, but I suppose we will have to do it.

Mr. Klots: I have one other exhibit, sir, which your Honor will recall, there was annexed to the stipulation of facts lists which show the prices at which various sewing machines in this country are sold—straight stitch, replaceable cam, et cetera.

We have in those charts, which the government kindly consented to—here is a chart, straight stitch——

The Court: Have these charts been marked in evidence?

Mr. Klots: No, they have not. That is the point. This is a chart which we neglected to ask them to stipulate at the time they were making the statement of facts, and this chart has been prepared since then, and it shows the various types of straight stitch machines, the prices at which they are sold, and also whether a zigzag attachment is available.

The Court: I suggest that you give that to the government and let them look at it overnight.

[fol. 1618] Mr. Klots: They have had it, sir, for two weeks, and they have also had the shopper's reports which went with it and which could be checked, how we got this information.

I thought possibly they might be willing to let this go in on the same basis as the other charts that have already been marked in evidence.

That completes the file on all these types—these different types of machines.

Mr. Elkins: We object to them, your Honor.

The Court: If there is an objection, I will sustain the objection.

Mark it for identification.

Perhaps an evening of reflection might bring about a change of heart on the part of the government with respect to the various exhibits, which might simplify the proof further.

Mr. Elkins: This is unlike the previous chart, your Honor, in that it is not predicated on any facts on which there has been agreement. It is all new material.

The Court: It was not presented at the pretrial hearings, as I recall.

Mr. Elkins: No.

[fol. 1619] The Court: I am not finding fault with you but perhaps overnight you might look it over, and you might feel that it is accurate, and you might be disposed to save the court some time by consenting to its admission in evidence without conceding its accuracy.

Mr. Elkins: I wonder if opposing counsel might not also give thought to saving time of the court in relation to a witness who would testify as to some—how many—100 machines—whether they have attachments, what they sell for to the penny throughout the United States.

The Court: If you addressed that to him in private colloquy and conversation, I think you will find him most cooperative.

(Marked Defendant's Exhibit 166 for identification.)

* * * * * * *

[fol. 1620] By Mr. Klots:

Q. Mr. Bruder, there has already been testimony about the replaceable cams that are sold with the 401, the 404 and the 403, and I think the number that go as standard equipment with each machine has also been testified to. Can you tell us whether or not there have been many sales of the additional cams, the ones that don't come as standard equipment?

A. As has been previously testified, we make extra cams available for both the 401 and the 403. The sales of those extra cams have been very desultory, indeed.

Q. Do you know of any limit as to the number of cams that can be made for those machines?

A. No, sir. Our engineers assure us that they can make up cams to create any pattern anyone might want.

Q. Are there any machines that you know of, competitive machines, that sell less cams than Singer sells with their replaceable cam type machines?

A. Yes, there are a number of them. Two of the prominent retailers who were just mentioned, both Montgomery Ward and Sears Roebuck, sell replaceable cam machines, so-called, that have fewer cams with them than the 401 or the 403.

[fol. 1621] Q. So Montgomery Ward and Sears Roebuck sell less cams with their machines than you do, is that right?

A. On some models.

Q. On some models, yes. Did you ever know or hear of a customer coming into a Singer store, in your experience in the sales department, and asking specifically for a machine with the dial or tune-in knob to change patterns?

A. I never heard of any such inquiry ever having been made.

Q. As a matter of fact, what do customers usually ask for when they come in to a shop to buy a machine?

Mr. Elkins: I object, your Honor.

The Court: Do you object because you feel that he does not have the basic knowledge to permit him to answer?

Mr. Elkins: That's right. As I recall his qualifying testimony——

The Court: Yes, you had better qualify him as to his knowledge of it.

Mr. Klots: Well, I will, but I thought he was pretty well qualified.

The Court: I did, too, but Mr. Elkins wants to have some [fol. 1622] questions addressed to his experience in this particular field.

Q. Tell us again, or tell us, Mr. Bruder, whether part of your job in any way—and, if so, how you go about it—is finding out what the customers who come into a Singer retail store indicate they want.

A. In addition to the regular channels which I mentioned earlier, may I point out that I, in the course of a year's

time, visit a very substantial number of Singer shops. I talk with them——

The Court: Retail shops?

The Witness: Retail shops, sir.

The Court: And you visit them yourself?

The Witness: I visit them. I talk personally with sales women on the floor of these shops.

The Court: And are you present there when customers come in?

The Witness: I am present there when customers come in. Occasionally I assist, even now, in getting a sale started. If the girls on the floor are busy, I will wait on a customer myself.

One of the things, among the many things, that I ask our managers, our salesmen, our sales people is what are people [fol. 1623] asking for when they come in. I have two things in mind. I am constantly trying to measure the efficacy of our advertising. When you spend $3,000,000 a year on television, you want to know what response you are getting for $3,000,000 from the public. And one of the questions I frequently ask is, leaving out the notions buyers, "What do people ask for when they come in to inquire about sewing machines?"

Q. What did you find out as a result of that inquiry?

A. There are three general questions that are most frequently asked: No. 1, "I would like to look at a good used machine." No. 2, "I want to look at a sewing machine. Now, nothing fancy, just a plain sewing machine." No. 3, "I would like to look at that Slant-O-Matic that you have advertised so much." These are the three commonest inquiries that a potential customer will make when coming into our store.

Q. What would you say as to whether or not the sewing machines sold in the United States vary in the different features that they carry?

A. Of course they vary greatly in the different features they carry. One way of looking at a sewing machine is to regard it as a package or bundle of features, and they will [fol. 1624] vary. These bundles or packages will vary in their composition, with the result that you could say there are 50 or 60 or almost a limitless number of combinations of features that can be put together in a sewing machine.

Q. And do these machines, although they have different features, compete with each other in this market?

Mr. Elkins: I object, your Honor.

Mr. Klots: I don't see what the basis of the objection is. This man can certainly tell——

The Court: Don't argue. It may be unnecessary.

Objection overruled.

Mr. Elkins: The word "compete," your Honor, is something that has stumped the courts, the Supreme Court. It is not even allowed in an interrogatory.

The Court: "Compete" is found right in the dictionary, is it not?

Mr. Elkins: I am afraid the legal dictionary would have quite a far more extensive——

The Court: This man is not a lawyer.

Mr. Klots: Please read the question.

(Pending question read.)

[fol. 1625] A. The very reason in designing a machine or a line of machines——

Mr. Elkins: Object, your Honor. This does not seem to be a responsive answer.

The Court: He has not finished yet. You are anticipating. If it is not responsive, you may move to strike it out.

. . . . . .

A. Right. The very reason or reasons that a marketing man uses in putting together a machine with a package of features, trying to get a different feature, is so that his machine will compete.

Q. I take it your answer is yes.

A. Very definitely yes.

Q. I think it has already been shown, Mr. Bruder, that there are sewing machines sold in the United States which have features that not even the Singer 401 machine has.

[fol. 1626] A. Yes, of course.

Q. We have had illustrations of the Necchi Supernova. Is that one?

A. The Necchi Supernova is one, the built-in needle threader, pattern elongation, cam control feed.

Q. Yes. By the way, speaking of the Necchi Supernova,

will you tell us whether or not Singer makes a practice of having its agents throughout the country send in examples of competing advertising?.

A. One of the regular, established procedures for gathering information about the competitive situation in the markets everywhere in the country is to have our general agents submit to us clippings of newspaper advertising and other advertising which inform us as to what our competitors are featuring, what they are doing. Some of that material comes in direct to my four assistant vice presidents. Some of that material under regular, established procedures goes to our trademark department when the general agent thinks that any particular advertisement, sign on a building or anything else might infringe a Singer trademark or Singer patent.

Q. That is the duty of those people to do that?

[fol. 1627] A. That is the regular, established procedure.

Q. I show you this photograph to which is attached a smaller photograph and ask you if this was sent in by one of your agents.

A. Yes, sir, it was.

Q. Who sent that in?

A. That was sent in by our Milwaukee central agency.

Mr. Klots: I offer it in evidence.

The Court: Isn't that the same exhibit we have now?

Mr. Klots: It is the photograph of——

The Court: 146-B?

Mr. Klots: The exact duplicate of it pasted in a window in, I guess it is, a Wisconsin shop.

The Witness: Actually, as I recall——

Mr. Klots: If I may be permitted to state, the particular one in evidence came from New Orleans. This is a photograph of the same thing you will find in a Necchi shop.

The Court: You recall, Mr. Elkins?

Mr. Elkins: I do now.

The Court: This is the sales propaganda, so-called, which the defendant has offered in evidence as being circulated [fol. 1628] by Necchi (indicating), and I received it subject to proof. Apparently this exhibit, this paper now offered in evidence, is some evidence to show that this was actually in a window out in Wisconsin.

Mr. Klots: A copy of the same thing was actually in a

window. I am perfectly willing to substitute that for the other exhibit.

The Court: No. Any objection?

Mr. Elkins: It is hearsay and accordingly we object to it, your Honor. As I recall, the first witness that put this in said that it was not intended for the consumer but was intended solely for the training, the trainees of Necchi.

The Court: That's right. Now he has discovered on research, not in time to take a deposition, that it was put in a window of a retailer out in Wisconsin.

Mr. Klots: And attached is a photograph of the thing in the window, a little white patch.

The Court: We will mark it for identification. I cannot take it in evidence. Legally the objection is well taken. We will mark it as Defendant's Exhibit 146-C for identification.

[fol. 1629] Mr. Klots: If necessary, I will get the man who took the photo.

The Court: Well, you might be able, with a little conversation, to persuade Mr. Elkins to concede that, if the witness were called, he would testify to certain facts which might make it admissible.

Mr. Klots: I will be as mellifluous as possible in my conversation with him.

(Marked for identification as Defendant's Exhibit 146-C.)

By Mr. Klots:

Q. Now I ask you, Mr. Bruder, if this one came in from another part of the country, this paper that I now show you?

A. Yes, this is one of a number of these which were submitted in the usual course of business from various agencies.

The Court: Do you offer it in evidence?

Mr. Klots: I offer it in evidence.

Q. This came from where? Can you tell (handing paper)?

A. Yes, this particular one came in from our San Francisco agency.

Q. Is that a memorandum that came with it?

[fol. 1630] A. This is the memorandum that came with it. The memorandum is by one of our district managers, a man by the name of Sewell. It is addressed to the central

agent, general agent in San Francisco, Mr. Howard Doerr. Mr. Howard Doerr in turn sent it in to Mr. Tinkle who is one of my assistant vice presidents in charge of the Far West, and he turned it over to me.

Mr. Klots: I offer it in evidence together with the memorandum that came with it.

The Court: This is a different circular?

Mr. Klots: It is pretty near the same. It is a little different.

The Court: It is different in layout, I have observed.

Mr. Klots: Yes, a little different layout.

The Court: Any objection?

Mr. Elkins: We object, your Honor.

The Court: The objection will have to be sustained. Mark it for identification as a new number.

(Marked for identification as Defendant's Exhibit 167.)

* * * * * * *

[fol. 1631] Q. Mr. Bruder, I think previous testimony has indicated that a couple of the features that some of the Singer competitors have on their machines, such as the Necchi Supernova, are cam controlled feed, elongated stitch control—are you familiar with those two?

A. Yes.

Q. What I want to ask you is: did you ever hear of a pattern elongation market for sewing machines?

A. No, sir.

Q. Did you ever hear of a cam controlled feed market for sewing machines?

A. No, sir.

Q. Does Singer finance its sales of household machines, I mean finance the customer in any way?

[fol. 1631a] A. Yes. We do not use the facilities of an outside finance company; we carry all of our instalment paper. We have our own acceptance, collection departments.

[fol. 1632] Q. What are your terms that you make with a customer buying your machines?

The Court: How is this material to this case? I don't see how it is material.

Mr. Klots: Well, I think it shows, your Honor, that these

machines, even the high-priced ones, are competitive with the lower-priced machines because you can buy them on so many dollars a week or so many dollars a month.

The Court: Singer carries their own finance on installment sales rather than send them to CIT or something?

Mr. Klots: I did not mean that. What I meant to ask was can a customer buy a Singer machine on the installment plan. That is all I meant to ask him.

The Court: If that's all you want, we will let him answer that.

Can you make a purchase of a Singer machine on the installment plan?

The Witness: You may take up to 30 months to buy a Singer sewing machine on the installment plan.

Q. What percentage of your sales would you say were financed under the installment procedure?

A. Between 70 and 75 per cent of our sales are in-
[fol. 1633] stallment sales.

Q. Do other retailers sell under the installment plan?

A. Yes, they do, sir.

Q. Do you know whether or not Singer's terms of payment are or are not as favorable as those of other retailers?

A. Our terms are as favorable as any that I know of and more favorable than many.

Q. Do retailers, in your experience that you are familiar with, not only Singer ones, who carry household sewing machines, limit their lines to one particular type?

A. No, sir.

Q. Do you know of any retailer who does not carry any built-in multiple-cam zigzag machine?

A. Yes, there are several very prominent ones.

Q. Will you mention some.

A. Montgomery Ward, for one, does not sell a so-called built-in cam machine.

Q. Any other mail order house?

A. Sears Roebuck no longer sells one. They did but the model 90 has replaced it.

Q. Do most manufacturers of sewing machines that you
[fol. 1634] are familiar with make straight stitch as well as multiple-cam, replaceable cam and manual sewing machines?

A. I am sorry. Would you mind repeating the question.

Q. Certainly. Do most manufacturers of sewing machines make straight stitch as well as machines that have multiple-cam devices, replaceable cam devices and manual devices for making the zigzag stitches?

A. Most manufacturers do not restrict their manufacture, if I understand your question, to just one type of machine.

Q. That is my question.

A. They will make a straight stitch machine and they will make machines with a swinging or vibrating needle bar actuated by various devices or means.

Q. Now take wholesale distributors. Do they distribute straight stitch machines with zigzag attachments and machines with built-in multi-cam devices, machines with replaceable cam devices, machines with manual devices? Would they carry all those types?

Mr. Elkins: Objection.

The Court: What is the ground of your objection?

Mr. Elkins: I don't know if he has been qualified as to wholesalers, who the wholesalers are and how they conduct [fol. 1635] their business.

The Court: If he doesn't know, he will tell us.

Do you know? Are you able to answer this?

The Witness: I am familiar with the means and methods of distribution of sewing machines in the United States, your Honor. It is part of my job to be aware of that.

The Court: Objection overruled.

A. Wholesalers do distribute a variety of machines. A wholesaler does not restrict himself to just one particular kind or model of machine.

Q. What about retailers? Do most retailers carry straight stitch sewing machines as well as sewing machines with built-in zigzag devices?

A. Yes, sir, they do.

Q. And do retailers carry straight stitch sewing machines in different departments or in different places in the store from where they carry machines capable of producing zig-zag patterns?

A. No, sir.

Q. Do retailers physically segregate, for purposes of sale, machines with manual devices, replaceable cam devices, multiple-cam devices and straight stitch sewing machines

[fol. 1636] with zigzag attachments? Do they segregate them in the store in different places?

A. No, they are all displayed in the same retail area.

Q. Now tell us this. Tell us whether or not straight stitch sewing machines with zigzag attachments, machines with manual devices for making zigzag stitches, machines with replaceable cam devices, and machines with multiple-cam devices are advertised in the same media, such as newspapers, women's magazines, consumer periodicals, trade journals, radio and television, or are the different models advertised in different types of advertising media.

A. No, they are all advertised in the same advertising media and frequently in the same ad.

Q. Do customer's who come in to Singer shops—and I think you have already testified as to what you know about customers coming in to Singer shops—indicate, prior to the salesman's demonstration, that they know the difference between a straight stitch sewing machine with a zigzag attachment and these other devices for making zigzag stitches?

A. The customer doesn't have a clear-cut knowledge of how zigzag stitching is accomplished in one machine versus another. There is a consumer awareness of a straight [fol. 1637] stitch machine and a consumer awareness of zigzag stitching of various kinds, but the means by which it is accomplished the average customer doesn't know anything about.

Q. Do the customers who express an interest in zigzag stitching patterns ask for the machine which can produce a great number of stitch patterns?

A. No, sir.

Q. Mr. Bruder, what features are Singer's salesmen instructed to emphasize in attempting to interest a customer in a specific sewing machine?

A. We put out a great deal of training material to guide our sales people in the sale of sewing machines. Some of this material has to do with the selling of sewing, the advantages of sewing, to any customer, what we call creative selling material, trying to create interest in a machine and the sale of the machine where possibly the woman has expressed no specific interest in buying one.

In addition to that, we put out a great deal of product

training material which is designed to familiarize the sales people with the most important features and qualities of our machines so that they may be best presented to the public.

[fol. 1638] Q. Now I show you this document here. What is this?

A. This is a chart which we put out to our selling organization for the purpose of calling to their attention the desirable features in our Slant-O-Matic machine and pointing out, as is frequently done in such comparative charts, the fact that none of our competitors have all of the features which we find in the Slant-O-Matic and that, in fact, most of them only have a few of the features which we have in the Slant-O-Matic.

The Court: Do you want to offer this in evidence?

Mr. Klots: Yes, I do. I offer it in evidence.

The Court: Any objection?

Mr. Elkins: No, your Honor.

(Received in evidence as Defendant's Exhibit 168.)

Q. I ask you what this is (handing).

A. Well, this is, first of all, a meeting guide to assist the manager in holding his weekly sales training meeting with his organization, and included in that is a Singer superiority checklist where we outline the various features that make our Singer slant needle series superior. You want me to read any of these features?

[fol. 1639] Mr. Klots: No. I offer it in evidence.

Mr. Elkins: As to the last exhibit, your Honor, Defendant's Exhibit 168, there are no dates available as to when they were distributed, and I don't recall any testimony of the witness on that.

The Court: Defendant's Exhibit 168 is in evidence. My recollection is that it was received in evidence by consent.

Mr. Elkins: That's right, your Honor.

The Court: This paper that is now offered in evidence, have you any objection to it being received, these booklets?

Mr. Elkins: I don't recall any testimony from the witness as to when they were printed, as to when they were circulated.

The Court: Is that the basis of your objection?

Mr. Elkins: That's all, your Honor.

The Court: When was this booklet prepared or circulated amongst your selling organization, approximately?

The Witness: Well, this is a comparatively recent shop meeting guide. I would say this was put out within the [fol. 1640] last few months. I don't have the date on it. I can obtain the date. The feature comparison list, again from memory, was put out, I think, in 1957 or early 1958. I can, again, go back and get the exact date.

The Court: Defendant's Exhibit 168 was put out in 1957 or 1958.

The Witness: That is just from memory.

The Court: The paper now offered in evidence, which is Defendant's Exhibit 169 for identification at the present time, you say is of recent origin, according to the best of your recollection?

The Witness: Yes, that is as I recall it.

The Court: Do you now, in light of this testimony, press the objection?

Mr. Elkins: No, your Honor.

The Court: Received in evidence, then.

(Received in evidence as Defendant's Exhibit 169.)

By Mr. Klots:

Q. Mr. Bruder, what are some of the factors which weigh with the Singer Company in pricing a sewing machine?

A. There are a number of important factors which we [fol. 1641] take into consideration in establishing the price on a sewing machine, some of which I think are common to all companies or all marketing people.

First and foremost, in establishing your price, you consider the name that your product is going to bear, and, of course, in our case, with the name Singer, I think we are aware of, proud of, the name and believe that because of the prestige that the name carries, this is a factor that should be considered in establishing the price level.

Secondly, you must, of course, consider the quality and the features that deal specifically with general quality of performance as distinguished from features which perhaps have a colorful appeal, and certainly in the latter category the features which are going to be included in a

machine must be considered. The cost, of course, of the machine is always considered in pricing your product. The competitive market situation in general is always considered in pricing your product. The extra service that you are going to give, guarantees, service of the machine, instruction, these factors are also all considered in the pricing of your product.

Q. Yes. What about sewing courses?

[fol. 1642] A. That would be one of the services, the instruction that we give with a machine. Naturally, that would be considered in the pricing.

Q. Do you offer any guarantees with the machines?

A. I think that we offer the most liberal guarantee of any company in the business.

Q. The stipulation of facts in this case shows that many American manufacturing companies of sewing machines ceased to do business within the last few years. Singer is practically the only one that survived. How do you account for the fact that Singer has been able to survive and maintain a substantial share of the market?

A. We have been in business for 110 years, Mr. Klots. I think that we have earned a justified reputation for making a quality product that will last, a product on which the customer is always assured of being able to get parts and service. We have given sewing instruction to the purchasers of our sewing machines. We have worked with the public schools, we have worked with the 4-H Clubs, we have worked with the Girl Scouts, constantly building an awareness of Singer and an acceptance for Singer, and we, of course, try to keep our product line up to date and always offering to the public the kind of merchandise which we [fol. 1643] believe the public wants.

Q. What about the location of your stores?

A. Of course we had a tremendous built-in advantage in that we do handle our product from the time that—well, we actually cut our own logs to make our cabinets. We make our product; we distribute our product; we finance our product through our own organization.

Q. And your services, I think you have already mentioned, have you not?

A. The same thing is true on services, whether you are talking about service on the product from a mechanical

point of view or service and assistance in getting the best use from the product.

Q. Does Singer advertise widely?

A. We are by far the largest advertiser in the sewing machine field.

Q. Are the services which Singer can perform through its wholly-owned outlets throughout the country duplicated by any retailer of Japanese sewing machines?

A. Not that I know of, Mr. Klots.

Q. What about guarantees, sewing courses, general quality of Singer products? Are they duplicated by any Japa-
[fols. 1644-1644a] nese retailers?

A. Not in my opinion.

Q. Have you had occasion to observe, in the course of your experience in the sewing machine market, whether or not foreign-built sewing machines have been able to compete with American-made sewing machines in all types and prices?

A. I most certainly have been able to observe it, Mr. Klots.

Q. What have you been able to observe?

A. The foreign-built machines have been able to compete very successfully in the American market, and, as a matter of fact, with the exception——

Mr. Elkins: I object, your Honor. He seems to have answered the question fully and completely.

The Court: Yes, he has.

* * * * * * *

[fol. 1645] New York, June 6, 1961, 11 A.M.

CHARLES F. BRUDER resumed.

Direct examination continued.

By Mr. Klots:

Q. Mr. Bruder, I recall that at the last question and answer before we ceased yesterday we were talking about whether or not foreign built machines had been able to

compete in the American market, and your answer was yes, to that effect. Now, the stipulation of facts in this case stipulates that among the companies which have gone out of business——

The Court: You had better refer to the number. What paragraph number?

Mr. Klots: I am referring to paragraphs 10 and 11 of the stipulation of facts, page 5 and 6.

Q. Among the companies which have gone out of busi-
[fol. 1646] ness in the United States was the White Sewing Machine Corporation. What information do you have as to the reasons why the White Sewing Machine Company ceased to manufacture in the United States?

Mr. Elkins: I object, your Honor.

COLLOQUY BETWEEN COURT AND COUNSEL

The Court: I think we are getting a little far afield from the issues in this case.

I take it that you object to this, Mr. Elkins, as being immaterial?

Mr. Elkins: Yes, your Honor.

Mr. Klots: May I make this statement about it, your Honor?

The Court: Yes.

Mr. Klots: It does seem to me, sir, that on the question of the attempt to monopolize, the fact that the foreign competition, not only the Japanese but European, have been so successful is highly relevant. I think, with the picture of such successful competition that has gone on, that has driven these other companies out of business in this country, on the question of monopoly it has a great bearing, as to whether it is possible to monopolize this market.

The Court: Well, I don't think it is relevant here, particularly in my view of what I believe to be the govern-
[fol. 1647] ment's contention, and perhaps this would be an appropriate time to set that in its proper focus.

Mr. Elkins, one of the charges here or one of the counts here is that the defendant attempted to monopolize.

Mr. Elkins: That is right, your Honor.

The Court: Am I correct in my belief, in my understanding, that the government relies solely upon its contention

that the attempt to monopolize, which it charged against the defendant, arose from the acquisition of the Gegauf patent and that it had a purpose to so acquire that patent to exclude Japanese competition, and that by excluding Japanese competition through the assertion of the Gegauf patent that, in substance, is the attempt that the government charges was committed by the defendant to monopolize?

Mr. Elkins: That is substantially true, your Honor. I could make a couple of modifications, however.

The Court: Suppose you make such modifications as you think are necessary, because, as I have been listening to this case, I have come to the feeling that the government relies solely upon the acquisition of the Gegauf patent and the arrangements or agreements which were made with Vigorelli and with Gegauf as co-conspirators to put them [fol. 1648] in a position where they could assert restraints against importations only of the Japanese zigzag sewing machines, particularly the multi-cam machine carried zigzag sewing machines, and that you allege that the same acts which you say resulted in the imposition of unlawful restraints upon the Japanese importations of this type of machine are also the identical acts and the only acts that you charge as constituting the attempt to monopolize.

Mr. Elkins: If your Honor please, in substance what your Honor says is true. I would modify it only in the following particulars: that the acquisition by Singer was of two Gegauf patents, not one patent.

The Court: When I said "Gegauf" I meant what you call Gegauf 1 and Gegauf 2.

Mr. Elkins: Yes. Also, your Honor, the government contends that the attempt to monopolize is not confined to the exclusion solely of Japanese-made machines. The Japanese-made machines, as we tried to point out, was the subject of the alleged conspiracy as between Singer and Gegauf. However, in relation to the attempt to monopolize, it is the government's position that Singer, in acquiring these two patents, did so in order to exclude all imports from the United States of machines having the mechanism in- [fol. 1649] volved in the subject matter of those patents, and that it did so to prohibit anybody else from manufacturing such machines in the United States. So that the

attempt to monopolize goes out beyond the terms or the substance of the conspiracy.

Gegauf, for example, had no interest, apparently so far as the terms of the conspiracy are concerned, in whether or not Europeans came into the country.

Apparently he, as far as the substance of the conspiracy was concerned, had no interest in whether or not any other United States competitor or potential competitor might be able to manufacture those machines in the United States. However, in relation to the attempt, Singer did.

The Court: Do I understand by this statement of yours that the sole and only acts you charge were committed by Singer, which constituted the attempt on their part to monopolize, was the acquisition of the Gegauf 1 and Gegauf 2 patents?

Mr. Elkins: That is right, your Honor, with the addition of the acquisition of a Messerschmitt application which we state was acquired for the purpose of excluding or re-
[fol. 1650] stricting machines that would be imported into the United States, especially those from Japan.

The Court: Do I understand, then, that the sole and only acts that the government charges were committed by the defendant in the attempted consummation of monopoly were the acquisition of the Gegauf 1 and Gegauf 2 patents, and of the Messerschmitt application?

Mr. Elkins: That is true, your Honor. There might be another patent application——

The Court: I am not concerned with "might." I think we have reached the stage when "mights" should disappear from this case.

Mr. Elkins: Well, what your Honor says is true.

The Court: Then the government charges that the attempt to monopolize, which is charged against the defendant, the acts constituting that attempt were the acquisition of the Gegauf 1 and Gegauf 2 patents, and of the Messerschmitt application, and of nothing else.

Mr. Elkins: That is right, your Honor.

The Court: All right. Then in the light of this statement, Mr. Klots, I do not see how this evidence is material. We
[fol. 1651] are going to go in, then, to the question of the history of these 1, 2, 3, 4, 5, 6 sewing machine companies, and it does not appear to be necessary to do so, particularly

in view of the fact that the government does not charge here that Singer has a monopoly, does not charge that the acts of Singer ripened into a monopoly, and simply says that they attempted to secure a monopoly by the acquisition of Gegauf 1, Gegauf 2, and Messerschmitt application.

Mr. Elkins: Further, your Honor——

The Court: I take it in view of that, that this evidence is not material.

Mr. Elkins: We do not contend, your Honor, that the companies involved here in this discussion, the other United States companies—we do not contend here that they were excluded by Singer.

The Court: In other words, the government does not contend that Singer in any way contributed to the discontinuance of the business done by any other American sewing machine company.

Mr. Elkins: That is right, your Honor. It is no part of this case whatsoever.

The Court: And is no part of the charge made against [fol. 1652] the defendant.

Mr. Elkins: That is absolutely right, your Honor.

Mr. Klots: Your Honor, if I may just have a word. I think it is very important what your Honor——

The Court: This, I think, is very important.

Mr. Klots: It is very important what your Honor has brought out, but I do think this, that even in the idea of an attempt to monopolize, it must be an attempt to monopolize a relevant market, and what we have tried to show here that the relevant market was a much larger market than this particular type of built-in multi-cam device, and I think the fact that the great quantities of foreign machines have been coming in, of all types—built-in cam devices, replaceable cam devices, straight stitch kind of devices with zigzag attachments—I think the fact that they have been coming in to such an extent that other companies have had to go out of business has a great deal of bearing on the type of market, the relevancy of the market which we are accused of attempting to monopolize.

The Court: I will, in light of the statement you have just made, permit a limited examination into this field, [fol. 1653] which will concern when these companies ceased doing business, the type of machines that they did sell up

to the time that they went out of business—and not much more.

Mr. Klots: I am only going to ask about one company.

The Court: All right.

Mr. Klots: And I am only going to put in two exhibits about this one.

The Court: All right, we will permit this question. The government has an exception. We will determine what relevance it has later on.

By Mr. Klots:

Q. I call your attention to the fact, Mr. Bruder, that the stipulation of facts indicated that the White Sewing Machine Company had ceased to do business by 1959, and I ask you what information you have in your possession as to the reasons why the White Sewing Machine Company ceased to do business.

Mr. Elkins: I object, your Honor, on a different ground—that of hearsay. We are not directing ourselves now to——

The Court: Yes, objection sustained.

Were you familiar with the White Sewing Machine [fol. 1654] Corporation when it was in business?

The Witness: Yes, sir.

The Court: And where did it have its plant?

The Witness: In Cleveland, Ohio.

The Court: If you don't mind, Mr. Klots——

Mr. Klots: I would be delighted.

By the Court:

Q. When did it cease doing business?

A. It ceased manufacturing sewing machines in the United States in 1957.

It continues to do business by buying sewing machines from various manufacturers in Japan and having the White name placed on those machines.

Q. And what type of machine did they manufacture at the time they ceased doing business?

A. At the time they ceased doing business they were manufacturing a variety of so-called straight stitch sewing machines, a number of different models of straight stitch sewing machines.

Q. And do you say they still continue doing business but it is one of marketing Japanese-made machines under their trade name "White"?

A. Yes.

Q. And what type of machine have they marketed since [fol. 1655] they ceased their own manufacturing processes?

A. May I amend my previous statement by saying that in addition to the machines which they buy and put their label on in Japan, they have also brought some machines in from a German manufacturer.

Q. What type of machine did they bring in from Japan and Germany?

A. From Japan they have brought in several different models of so-called straight stitch machines and several different models of zigzag sewing machines.

Q. And from Germany?

A. From Germany a zigzag sewing machine.

The Court: Go ahead.

Mr. Klots: Thank you, sir.

By Mr. Klots:

Q. I should like to now show you this document and ask you if you recognize it (handing witness)?

A. Yes, sir, I do.

Q. What is it?

A. This a photostatic copy of the annual report of the White Sewing Machine Company, the original of which was sent to me by Mr. Volmer Fries, chairman of the White Sewing Machine Corporation.

Mr. Klots: I would like to offer it in evidence, purely [fol. 1656] for the purpose of showing the second paragraph on the first page (handing).

(Mr. Elkins examines)

Mr. Klots: I am perfectly willing to offer just that paragraph.

Mr. Elkins: We object to it, your Honor, as a matter of hearsay. This is a statement signed, I believe, by some Mr. Fries—F-r-i-e-s (handing to the Court).

Q. Who was Mr. Fries?

A. Mr. Fries is the chairman of the board of the White Sewing Machine Corporation.

COLLOQUY BETWEEN COURT AND COUNSEL

Mr. Klots: I call your Honor's attention to the fact that this, I think, can be regarded as a business record of the company, and has been so held by the Supreme Court of New York State under the Civil Practice Act. These annual reports are required to be filed with the SEC.

[fol. 1657] The Court: You don't dispute, do you, Mr. Elkins, that this is a photostatic copy of the annual report of the White Sewing Machine Corporation?

Mr. Elkins: No, your Honor, we do not.

The Court: For the calendar year ending December 31, 1957.

Mr. Elkins: No, your Honor, we do not.

The Court: And that this White Sewing Machine Corporation is the same corporation which is referred to and named specifically in the agreed statement of facts?

Mr. Elkins: That is true.

The Court: I will receive it in evidence. You may have an exception.

You only offer the second paragraph of the first page, and we might as well read it right in the record.

Mr. Klots: Yes.

The Court: Do you desire to have any other portion of the record in evidence, Mr. Elkins?

Mr. Elkins: Your Honor, I believe the whole thing should come in.

The Court: All right. We will receive the whole report in evidence, but the defendant specifically calls the Court's attention to the second paragraph on the page numbered [fol. 1658] one of the report, which counsel has inclosed in a bracket.

Mr. Klots: And the record, I assume, shows it is the annual report for the year 1957?

The Court: Yes. Is that the way you drew that line around that paragraph? Is that the proper paragraph, where you have the line?

Mr. Klots: Yes, that's right. That is where I drew that line around that.

(Received in evidence as Defendant's Exhibit 170.)

Mr. Klots: I have one other document which also relates to the difficulties of the White Company, and that is a certified copy of a brief submitted to the Committee for Reciprocity of the United States Tariff Commission, and it was submitted, according to this certificate, on April 3, 1957 by White Sewing Machine Company, and I offer it for the same purpose.

The Court: Have you an objection?

Mr. Elkins: This, your Honor, is a set of documents of some ten pages, and we would like to ask of opposing counsel the purposes for which it is being offered.

Mr. Klots: For the same purposes as the previous ex-
[fol. 1659] hibit, and I call particular attention to the second paragraph on the first page, and the second paragraph on the second page which might be called the first full paragraph.

Mr. Elkins: We object, your Honor.

The Court: Objection sustained. Mark it for identification.

(Marked Defendant's Exhibit 171 for identification.)

Mr. Klots: I would like to know the basis of the objection, your Honor.

The Court: The basis is that it is not a record of the type of the annual report. It is simply a brief that apparently has been filed with some agency of the government.

Mr. Klots: Yes. It is taken from the files of that agency.

The Court: You have offered it as proof of what it contains, the contents. It is not proof of its contents. There might be an exception made with reference to an annual report of a corporation which is required by law to be filed, but not with reference to a brief filed with a regulatory agency.

Mr. Klots: I am offering it also to show the state of
[fol. 1660] mind of the White Company, your Honor, not necessarily for the truth of the statements but for the state of mind in their representations to the United States Government.

The Court: If you want to do that, you had better bring somebody here from the White Company.

Mr. Klots: Your Honor, I have no further questions of

Mr. Bruder. However, may I say this, we have a witness here from out-of-state, from out West, and he will only take five minutes. I don't like to interrupt the cross-examination but——

The Court: I don't think Mr. Elkins will have any objection.

Mr. Klots: If we can just put him on now for five minutes——

The Court: What is he going to testify to?

Mr. Klots: He is going to testify about that sheet showing the Necchi machines, to identify that.

The Court: All right.

* * * * * * *

[fol. 1661] William T. Fitzgerald, called as a witness by the defendant, being first duly sworn, testified as follows:

Direct examination.

By Mr. Klots:

Q. Mr. Fitzgerald, where do you live?

A. Janesville, Wisconsin.

Q. And what is your address in Janesville, Wisconsin?

A. My home address?

Q. Yes.

A. 1205 Elida Street.

Q. Are you in the employ of the Singer Sewing Machine Company?

A. Yes, I am.

Q. What is your job?

A. I am district manager of the Illinois-Northwest District.

Q. Does that include the City of Janesville, Wisconsin?

A. It does, sir.

Q. Tell us whether or not one of your duties is to collect information as to the activities of the competitors of Singer and, in particular, the advertising activities of Singer?

A. That's correct.

[fol. 1662] Q. Of the competitors of Singer?

A. Yes, sir.

Q. Mr. Fritzgerald, I show you this little photograph and ask you who took that photograph.

A. I did, sir.

Mr. Klots: I offer it in evidence.

Mr. Elkins: No objection.

The Court: Received in evidence without objection. This was previously received in evidence subject to identification. Now, Mr. Clerk, simply cross out the "identification". Defendant's Exhibit 146C is now received.

Mr. Klots: I only offered for the moment this small photograph which I do not believe had been previously marked.

The Court: It had all been marked as one exhibit. As I understand it, the small photograph was represented yesterday or the day before yesterday as being a photograph of a window in Janesville, Wisconsin, in which the larger paper had been displayed publicly in a storefront.

The Witness: That's correct.

The Court: And you took that photograph?

The Witness: Yes, sir.

[fol. 1663] The Court: Do you remember when you took it, about?

The Witness: It was in October, sir. The exact date I am not sure of.

The Court: Of what year?

The Witness: 1960.

The Court: Was this large printing displayed in the window at the time you took it?

The Witness: Yes, sir.

The Court: And could it be perfectly viewed and seen by passersby in the street?

The Witness: Yes, sir.

The Court: And did you, walking by, notice it?

The Witness: Yes, sir.

The Court: Did you look at it?

The Witness: Yes, sir.

The Court: And this is an accurate reproduction of what you saw publicly displayed in a store window in October 1960—on what street?

The Witness: That is Milwaukee Avenue.

The Court: In Janesville, Wisconsin?
The Witness: That's correct, sir.
Mr. Klots: I have no further questions.
The Court: Is that a big thoroughfare?
[fol. 1664] The Witness: Yes, sir. It is the main street.
The Court: And in what store window was this?
The Witness: In the Necchi dealer's, sir.
The Court: The Necchi dealer?
The Witness: Yes.
The Court: Does Singer have a shop there, too?
The Witness: Yes.
The Court: Where is the Singer shop?
The Witness: Singer is located at 30 South Main Street.
The Court: How far away from the Necchi shop is that?
The Witness: Approximately five blocks, sir.
The Court: All right.
Mr. Klots: I have no further questions.

Cross-examination.

By Mr. Elkins:

Q. When did you send this to The Singer Company?
A. In October, sir.
Q. When?
A. In October.
Q. Of what year?
A. Of 1960.
[fol. 1665] Q. To whom in Singer did you direct it? To the Advertising Department or to whom?
A. To Mr. W. W. Kingsley, General Agent of the Milwaukee agency.
Q. And he, in turn, sent it to Singer headquarters; is that the idea?
A. That is my interpretation, yes, sir.
Q. Did you examine the material, sir?
A. Yes, I did.
Q. Are the representations made by Necchi here true?
A. Some of them are, yes.
Q. Which is to say that some are false; is that true?
A. No, I don't imply that. I mean they are all true.

Mr. Elkins: Will you repeat my question, please.

The Court: I don't see any need for that. I will give the orders to the reporter.

Q. You say all of the statements on here are true? All of the representations made on this——

The Court: Don't you think it would be more fair to direct the witness's attention to some particular para-
[fol. 1666] graph that you question and ask him if he knows about it? He may be in a position to answer you and he may not. If he is not in a position to answer you he will tell you.

Q. Just what did you send to your superior, Mr. Fitzgerald; was it the small picture or the photostat or what?

A. Complete as you see it here. There was sent in to our company this small picture and this one here (indicating).

Q. You took the picture, is that it?

A. I took this one, yes (indicating).

Q. Referring then to this photostat, where did that come from?

A. This was taken by Mr. Black, who was at that time assistant manager of our Janesville Singer store.

Q. Can you read item 8 here, which states: "A needle that slants has a longer motion in going through the material. It is liable in some cases to cause trouble and inconvenience in certain sewing materials"? Is that true, sir?

A. No.

Q. The statement is not true?

A. Not in my opinion, no.

[fol. 1666a] Q. Item No. 4: "Old-fashioned type of tension adjustment." Is that a true statement of the Singer 401 machine, sir?

A. In my opinion, no. I think the tension is adequate.

[fol. 1667] Q. Does all the material of this nature from competitors that go to Singer from your area go through you?

A. It goes through me, yes, sir.

Q. May I direct your attention to paragraph 1 of this, sir—and perhaps if you read it from the larger copy it will be easier.

Speaking of the Singer 401 machine, does it not say "Automatic mechanism has seven built-in single action discs producing seven limited decorative stitches".

Is that true, sir?

A. That is correct.

Q. Isn't it true that with the 401 machine it is possible to combine the intelligence from any two of these seven discs?

A. By using—yes, that is true.

Q. That is true. So I ask you again, then, if this statement is true?

A. There are seven limited decorative stitches—single action discs producing seven, yes.

Q. Isn't it possible that the seven can produce far more than seven? Will you read the statement again, sir: "Automatic mechanism has seven built-in single action discs pro-
[fol. 1668] ducing seven limited decorative stitches."

Is that true, that the 401 can combine the intelligence from those seven discs to achieve far more than seven stitch patterns?

Mr. Klots: I submit, your Honor, that there is nothing inconsistent with the two statements. I do not see——

The Court: I do not know that this man was offered as an expert on the machines, and I do not know that you have qualified him in any way to permit this interrogation.

You are interrogating him as to new matter. If you want to do that and if you want to make an expert out of him for your own benefit, qualify him. You have not done that. He has simply testified that he took a picture of what he saw, and this is the picture.

Q. Wasn't it one of your purposes in sending this on to the Singer headquarters that it contained statements which were not absolutely true?

A. No, sir.

The Court: Did you just take this picture to show an event of competition that you were meeting?

The Witness: That is correct, sir.

[fol. 1669] The Court: And you made a report as an item of competition?

The Witness: That is correct, sir.

The Court: What is your official duty?

The Witness: District Manager.

The Court: District manager of sales?

The Witness: That is right.

Q. Are you acquainted with the Singer 401 machine, sir?
A. Yes, sir.

Mr. Klots: I take it Mr. Elkins is making this witness his own witness.

The Court: Yes, he is interrogating him as to new material.

Mr. Klots: New matter.

Mr. Elkins: There is no new matter here, your Honor. The matter we are interrogating him on is the exhibit that he put in. If it appears that it contains statements that are not true——

The Court: You are not attempting to argue with the Court, are you? I say it is a new matter, that he was produced here as a factual witness, that he took a photograph of something that was exhibited in Janesville, Wisconsin—that is all he testified to.

[fol. 1670] Mr. Elkins: If your Honor please——

The Court: Let us quit!

Mr. Elkins: All right. Am I to understand, then, that this exhibit has not come in for the truth of the material that it contains?

The Court: Objection sustained as to the form of the question. The Court sustains the objection.

Mr. Elkins: I am sorry, your Honor. That is not a question to the witness.

The Court: To me?

Mr. Elkins: Yes—or to opposing counsel, I mean to say.

The Court: As far as this witness is concerned, it is simply presented by him as being a circular or an advertisement which has been used by a competitor in Janesville, Wisconsin. It is offered by the defendant, however, to show the competition that is met and the claims which the defendant meets from other manufacturers, particularly from the Necchi machine—and to show and to have bearing upon the revelant market and the substitutes in that relevant market.

That, as I understand it, is your purpose.

Mr. Klots: That is correct, sir.

[fols. 1671-1673] The Court: Not to accomplish that purpose by this witness.

Mr. Klots: That is all.

The Court: All right.

Mr. Elkins: We have no questions, your Honor.
Mr. Klots: That is all, Mr. Fritzgerald.

(Witness excused.)

The Court: The defendant thought to accomplish this purpose through the witness Hutton and through the witness Bruder to some extent.

• • • • • • •

[fol. 1674] FRED F. FAIRMAN, called as a witness in behalf of the defendant, having been first duly sworn, testified as follows:

Direct examination.

By Mr. Wesely:

Q. Mr. Fairman, where do you reside?
A. I reside in Tokyo, Japan. My home address is

26 1-Chome
Fuichzawa-Cho
Setagaya-Icu
Tokyo

Q. Mr. Fairman, what is your present position?
A. I am general manager for Singer in Japan.
Q. Is that the Singer Sewing Machine Company?
A. That is the Singer Sewing Machine Company.
Q. In Japan.
A. Yes.
Q. And how long have you been in the orient?
A. Well, I was born and raised in Shanghai, and spent most of my early school life in Shanghai, China.

I came to the United States to attend schooling two years before going to college, and I graduated from the University of Nebraska with a B.S. degree in 1941.

Q. How long have you been with the Singer Sewing Machine Company?
A. I have been with the Singer Sewing Machine Company for 11 years.

[fol. 1675] Q. What part of that time did you spend in Japan?

A. I have spent all but one year in Japan. The first year would be in New York City.

Q. Prior to your employment as general manager of Singer Sewing Machine Company in Japan, what other position did you hold with that company?

A. When I was first assigned to Japan I was assigned as assistant to the manager.

In 1956 I was appointed as manager of Tokyo Central Agency.

In 1960, January 1, 1960, I was appointed general manager.

Q. Do you hold any position with the Pine Sewing Machine Manufacturing Company in Japan?

A. Yes, I am vice president and director of that company.

Q. And what is the Pine Sewing Machine Manufacturing Company?

A. The Pine Sewing Machine Manufacturing Company is a Japanese company. It is owned jointly by the Singer Manufacturing Company and the Japan Steel Company. The latter company is a Japan company. The joint ownership incidentally, is on a 50-50 basis.

[fol. 1676] The Pine Sewing Machine Manufacturing Company manufactures sewing machines which the Singer organization distributes in the orient.

Q. Do you or others under your supervision deal with the Japanese Government and with the various associations of Japanese manufacturers and exporters of household sewing machines?

A. Yes, we do. There is a constant contact—

Mr. Elkins: I object, your Honor. The answer is "Yes". It has been given.

A. Yes.

Q. What are the various associations—what are the various contacts that you have in dealings, you or others under your supervision in dealing with various Japanese manufacturers' associations and exporters in Japan?

Mr. Elkins: Objection, your Honor.

The Court: I do not know just what the purpose of this is.

What is your purpose?

Mr. Wesely: Your Honor, this is a part of the qualifications of this witness, who will testify as to the operation and the existence of the cartel—the various combinations of manufacturers and exporters of sewing machines in [fol. 1677] Japan, which are in turn directly controlled by the Japanese Government, as showing that the substantial number of machines which are exported from Japan to the United States market are supplied by this cartel, and that under those circumstances none of the acts here charged could result in the dangerous probability to monopolize or eventuate in monopolization.

Also, your Honor, we are charged with violation of Section 1 of the Sherman Act, with having restrained trade and commerce.

The government has argued—and this was taken from the record, your Honor, at page 1436, that "because of the circumstances and the purposes and the intent of the parties, that the acquisition of the Gegauf patent application was a restraint of trade." The evidence we propose to introduce through Mr. Fairman is relevant because it tends to explain the purposes and the circumstances, and the intent that the government charges is unlawful.

In its contentions the government argued—in their contention filed with this court on March 14, 1961, paragraph 9—and I will read that paragraph: "Furthermore, whether or not this combination and conspiracy is illegal per se, it is unreasonable under the facts of this case in that the [fol. 1678] restraint on interstate and foreign trade or commerce, which was intended and/or affected by this combination and conspiracy, unreasonably exceeded that degree which may have been reasonably necessary to effectuate any conceivably legitimate business purpose."

Your Honor, we submit the basic principle of the Chicago Board of Trade case is applicable here.

Mr. Justice Brandeis said in that case, "the legality of an agreement or regulation cannot be determined by so simple a test, as whether it restrains competition. Every agreement concerning trade, every regulation of trade, restrains." Restraints fall under the condemnation of Section 1 only when their purpose and effect are found to have imposed an undue restraint on commerce. This is to be determined in the light of the extent and the nature of

the market, and, as set forth in Chicago Board of Trade, in the light of "the facts peculiar to the business to which the restraint is applied."

For these reasons both relevant to Section 2 of the Sherman Act charge, which the defendant is confronted with, and under Section 1 charges, the evidence we propose to [fol. 1679] introduce through Mr. Fairman is relevant and material in this case.

The Court: Objection overruled.

I am going to take it. Whether or not I will give it any weight I will determine on the entire record.

By Mr. Wesely:

Q. Mr. Fairman, would you please answer the last question which was, what contact and dealings did you and others under your supervision have with the Japanese Government and the various associations, manufacturers and exporters of sewing machines in Japan?

A. The Pine Sewing Machine Manufacturing Company belongs to the various associations that are concerned with the control of export of sewing machines from Japan.

Also as of March this year, the Singer Sewing Machine Company joined the Japan Sewing Machine Exporters Association. We joined it to assure ourselves that we would have a quota for exporting sewing machines, and with these contacts that are continued daily by people in the Pine staff and also my own staff, reports are written which are submitted to my office and thereby I get current as to what is happening.

[fol. 1680] Q. Does the Japanese Government control the manufacture and sale of household sewing machines which are exported from Japan?

Mr. Elkins: I object.

The Court: What do you object to?

Mr. Elkins: I object, your Honor, as to the competency of the witness to testify as to what is controlled by the Japanese Government, what is meant by control, and he just does not appear to be qualified to testify as to what is done.

The Court: You may cross-examine on that when it comes your time. Just make a little note of it. I will take it.

Objection overruled.

(Question read.)

A. The Japanese Government, working with or through the various associations, controls the export of sewing machines by fixing the quantity of the sewing machines which may be exported, by fixing the prices of the sewing machines—these are minimum prices—by determining which factories are permitted to manufacture machines for export; by setting detailed standards of quality which those products must fulfill before they can be exported, and by prescribing the methods of payment for the export of [fol. 1681] these sewing machines.

Q. In your answer you referred to the controls with respect to the quantity of household sewing machines.

What sort of control is that in terms of quantity?

A. The Japanese Government sets a quota—the quota being the maximum number of machines that individual manufacturers and exporters can export.

Q. Is that quota still in effect?

A. Yes, it is.

Q. And how does the Japanese Government determine the quantity of household sewing machines which an individual manufacturer can manufacture and sell for export?

A. The Japanese Government, having established a basic quota, working with the Japanese Sewing Machine Manufacturers Association, works from this quota by having—or through the association, the Manufacturers Association, an allotment on a quarterly basis to the individual manufacturers, a percentage of that basic quota. That percentage can vary from quarter to quarter, but it is generally between 70 per cent and 100 per cent. This allotment then goes to the individual manufacturers on an established formula and becomes what is known as a working quota. [fol. 1682] The quota I referred to previously is considered a basic quota or is called a basic quota, and this is considered and called a working quota.

Q. Can this quota be increased?

A. The working quota can be increased by two methods, either by the individual manufacturer earning certain incentives or also what is generally known as a special quota.

Q. How does the incentive quota system work?

A. The incentive quota system works by the government

allowing for bonuses, quota bonuses for various types of export which it wishes to encourage. The types of export which it would wish to encourage would be, for instance, the export of a complete set. A complete set would be the sewing machine head, the table and stand as compared to, say, shipments of head only.

The Japanese Government wishes also to encourage the shipment of established brand names, and there is also another bonus that is offered to manufacturers and exporters that have established contacts, that is, importers in the United States over a long period of time. They also wish to encourage exports——

Mr. Elkins: I object to that, your Honor, to this material, [fol. 1683] as to what the Japanese Government wishes to do.

The Court: Yes.

Mr. Elkins: The material, I submit, might not be in the hands of——

The Court: He can tell us what he knows of the rules and regulations, but a discussion of their purpose is immaterial.

Q. In your answer to my last question, Mr. Fairman, were you setting forth there, in your answer, rules and regulations prescribed by the Japanese Government as to the manner in which this incentive quota could be earned?

A. Yes. These are various means by which a percentage is given to a manufacturer over and above the working quota. These are the various ways in which a manufacturer can earn this incentive quota.

Q. Do manufacturers in fact earn such incentive quotas by doing these things that you just explained in your answer?

A. Yes, they do.

The Court: Are these regulations and rules applicable only to the sewing machine industry?

The Witness: As far as I know, so far as my knowledge [fol. 1684] is concerned, I would say yes, but I assume that they would have regulations for others.

The Court: You do not know?

The Witness: I do not know.

The Court: But you do know that these rules and regula-

tions are applicable to sewing machines manufactured in Japan?

The Witness: Yes, sir.

Q. Mr. Fairman, through what instrumentalities does the Japanese Government apply and maintain and establish these rules and regulations?

A. The Japanese Government mainly administers this control through its Ministry of International Trade and Industry. That is commonly referred to as MITI, and also the various associations that work closely with MITI for this purpose.

Q. Which are some of the associations?

A. Well, there are a number of associations. There would be the Japan Sewing Machine Manufacturers Association, the Japan Sewing Machine Exporters Association. Closely related to the Manufacturers Association would be the various associations that involve the parts manufacturers—the table and stand manufacturers and the arm and bed manufacturers.

[fol. 1684a] Each one of these have their own associations and would be named the Japan Parts Sewing Machine Manufacturers Association and so forth.

Then there is the Japanese Sewing Machine Foreign Trade Promotion Association, the Japanese Sewing Machine Inspection Association, and the Japanese Sewing Machine Association itself is another association.

All these associations are involved in the administration of this control.

[fol. 1685] Q. Coming back to the incentive quota system whereby a manufacturer can increase his basic quota, there was a special quota, too. How does the special quota work?

A. The special quota is a grant that is administered by the government to take care of special cases. For instance, if a sewing machine manufacturer has developed a special innovation or a special refinement for its product, he may apply to the government and obtain a special quota.

Q. Can a manufacturer sell any of his machines for export which exceed in number the total quota allotted to him?

A. No, he cannot, except for two additional ways or two exceptions, and this would be, one, if he applies to the

government to obtain a portion of a future quota from a period that is in the future, that is, beyond the current period, and another way is to purchase a quota from another manufacturer who is not using his quota.

Q. Are there separate quotas depending upon the country to which the household sewing machines are to be exported?

A. Yes, there are. The quota system is divided between [fol. 1686] Area 1 and Area 2. Area 1 consists of the United States, Puerto Rico and Canada, and Area 2 is the balance of the world.

Q. Can all manufacturers obtain manufacturers' export quotas?

A. No, only those manufacturers that have their factories registered with the government and also are members of the Japan Sewing Machine Manufacturers Association can export machines.

Q. How does the Japanese Government fix the quantity of household sewing machines which exporters, taken together, can sell for export?

A. The Japanese Government, working with the Japan Sewing Machine Exporters Association, establishes a quota, and once this quota is established they assign the quota direct to the various exporters. Forty-five percent of the total quota is assigned directly to the exporters and a further 45 per cent can be obtained by the exporters pretty much as a routine matter, provided they have orders for sewing machines, they have pending orders, and there is a balance there of 10 per cent which the government reserves to take care of the special cases.

[fol. 1687] Q. All right. Does this exporter's quota apply throughout the world?

A. No. This exporter's quota is limited now to Area 1.

Q. And what countries are included in Area 1?

A. The United States, Puerto Rico and Canada.

Q. Can all exporters obtain export quotas?

A. Only those exporters that belong to the Exporters Association may obtain export quotas.

Q. How substantial an export industry is the sewing machine industry in Japan?

A. The sewing machine industry in Japan, as far as exports are concerned, has been consistently one of the

three leaders over the past years that I have been in Japan. It has been, to my recollection, several times the second largest exporter. Frequently it is the third largest. Occasionally it is the fourth largest.

Q. Turning now, Mr. Fairman, to——

The Court: Mr. Wesely, it appears to me that if these rules and regulations find embodiment in Japanese law, it might be well for you to consider whether or not you want to place those Japanese laws and regulations in the record, particularly when here a very new and novel question is presented to the Court, it seems to me, since [fol. 1688] the government charges that the restraints were unlawful solely because they were directed against Japanese importations and particularly against a particular type of Japanese manufacture, if in fact that Japanese importation is an importation of a cartel and an American manufacturer is attempting to protect himself against the activities of one single cartel, the question is whether or not that is a violation of our law.

I don't know of any case where so narrow a charge was ever presented by the government in an antitrust suit as is presented here on account of restraints directed against a single country. You might consider whether or not you want to put these Japanese laws and regulations in evidence.

Mr. Wesely: Yes, your Honor, I will. Of course, this witness is testifying as to the practice in Japan.

By Mr. Wesely:

Mr. Fairman, how does the Japanese Government control the minimum quality of household sewing machines which are to be exported?

A. The Japanese Government, through its technological bureau, and working with the Japan Sewing Machine Association, established a detailed list of standards. These [fol. 1689] standards are called the Japanese industrial standards, and the products of the manufacturers must qualify as far as these standards are concerned before they are permitted to be exported, and these products are inspected to make certain that they do fulfill these standards.

There is another way, and that is each manufacturer must qualify his factory before he is permitted to be registered with the Japanese Government, and the government inspectors, engineers, call at the factory and inspect the factory as to its production facilities, whether it has adequate inspection facilities, whether it maintains qualified engineers. If it finds that the manufacturer is qualified, it will register that factory, but unless the factory is registered, it cannot export their product.

Q. In your answer, sir, when you referred to products, were you referring to a particular product?

A. I was referring to sewing machines.

Q. How does the Japanese Government fix the minimum prices at which the household sewing machines can be exported?

A. The Japanese Government, working with the manufacturers association and the exporters association, [fol. 1690] establishes what is generally referred to as check prices, sometimes referred to as guide prices. These guide prices then become the minimum price for—incidentally, these prices are set for different types of sewing machines, different classes of machines, and they become the minimum price at which the sewing machines can be exported.

Q. Who is it that fixes this minimum price?

A. The association recommends the price that they feel to be a reasonable price, and the Japanese Government reviews this recommendation, makes changes if it deems it necessary to make those changes, and then it finally approves and establishes prices.

Q. Are prices established both as to Area 1 and Area 2?

A. Yes.

Q. What are the various certifications which must be obtained before a household sewing machine can be exported from Japan to the United States?

A. In order to export sewing machines from the United States, your covering documents must have certifications to all of these things——

The Court: You mean to the United States, exports to the United States?

[fol. 1691] The Witness: Exports to the United States, yes, and exports to other areas as well.

A. (continuing) These documents must have the certifications to which I have been referring. In other words, the documents must have a certification to show that they are within the quota of the manufacturer who has manufactured the machines and the exporter who is exporting the machines. These certifications come in the form of chops. Chops are generally used throughout the Orient, and in Japan it is a form of a stamp that they apply to an ink pad and then to the document itself.

The Court: A seal.
The Witness: A seal.
The Court: A chop is a seal.

A. (continuing) And there must be a certification that the price is as prescribed in the check prices or guide prices. There is a certification by the inspectors from the inspection association that the sewing machine quality is up to the JIS standards, and this, depending upon the sewing machine, the form being exported, may have the chop for the sewing machine itself as being up to JIS standards, the table, the stand, so there will be more than one chop on the quality. It also must be certified by chop [fol. 1692] that the product is from a manufacturing plant that has been registered with the Japanese Government, and also an authorized bank must chop the document to certify that the payment is within the regulations of the Japanese Government.

Q. What are the minimum requirements as to payment?

A. Payment is generally required on the basis of cash, but letters of credit with 90-day terms are permitted. When I refer to cash, I mean payment by check, by cash or by letter of credit on shipment.

Q. Must each machine be certified that it is not being sold for less than the minimum price?

A. Yes, it must.

Q. And after all these certifications have been obtained are they then presented to some agency of the government in Japan?

A. After all these certifications have been obtained, they are presented to the Japanese Government immediately in order to obtain an export license. The entire file of documents covering the shipment is reviewed by the govern-

ment, making certain that all certifications have been applied, and if everything is in order, then an export license is granted. After an export license is granted, the [fol. 1693] exporter proceeds to customs where a final check is made to make certain that the shipment is in order.

Q. Are there Japanese manufacturers which own or control distribution organizations in the United States?

A. The Brother sewing machine——

Mr. Elkins: I object, your Honor. I don't know whether he is qualified for that or not.

The Court: I think he has given evidence of prima facie qualification. If he doesn't know, he will say not, and you may cross-examine him as to the basis of his knowledge.

A. The Brother Sewing Machine Company, the Nippon Sewing Machine Company, as it is known in Japan, owns the Brother International Corporation. Janome Sewing Machine Company recently purchased the New Home Sewing Machine Company and its distribution outlets in the United States. The Fujikoyo Industries is an exporter which owns the Fuji Industrial Company in the United States. I understand there are many more, but I can't recall the names right now.

Q. Mr. Fairman, what is the Japan Export Trade Rehabilitation Organization, and what is its function?

A. The Japan Export Trade Rehabilitation Organization [fol. 1694] is a public corporation, tax-exempt corporation, which promotes foreign trade of products manufacturers in Japan. They are interested in promoting the export of Japan's trade in many ways. It does research in foreign countries, it sends trade ships for display of the products of Japan, and it donates funds to, for instance, the Japan Sewing Machine Exporters Association, assisting them in one case to hire lawyers to defend their interests in the Singer case, which was brought before the Tariff Commission.

Mr. Wesely: You may examine.

The Court: Suppose we take a five-minute recess now.

(A short recess.)

Cross-examination.

By Mr. Elkins:

Q. You stated, I believe, sir, that Nippon in Japan owns Brother International.

A. The Nippon Sewing Machine Company? Yes.

Q. In Japan owns, you say, Brother International?

A. Yes.

Q. What is the full name of Brother International?

A. Brother International Corporation, I believe.

Q. And where is it located?

A. I am not sure where its head offices are.

[fol. 1695] Q. Some place in the United States?

A. Yes.

Q. How much does Nippon own?

A. I understand that it owns all the shares.

Q. All of them?

A. Yes.

Q. Are you as sure of this piece of testimony, sir, as you are as to the ownership of Janome? Is that the right name?

A. Janome, yes.

Mr. Wesely: I object, your Honor. I believe it is argumentative.

The Court: Well, the way it is framed, it is argumentative.

Q. As to your source of information relative to the ownership by Nippon of Brother International, is that the same general source of information that has to do with the ownership of Janome?

A. Generally speaking, I would say so, yes, sir.

The Court: What is this, what is known as common knowledge in the trade in Japan?

The Witness: Common knowledge. It appears in trade publications. It appears in newspapers in Japan.

The Court: In Japan?

[fol. 1696] The Witness: Yes, sir.

The Court: Is it mentioned openly at times at trade meetings?

The Witness: Yes, sir.

By Mr. Elkins:

Q. And is that the same source of your information as to the ownership of Fuji?

A. Yes, sir.

Q. Of the Fuji Industrial Company in the United States?

A. Yes, it is.

Q. In your direct testimony, sir, you referred to a basic quota and also to a working quota, is that true?

A. Yes, sir.

Q. The basic quota is laid down, is it, as to all of the machines of a particular type that will be exported, and the working quota relates to a particular company; is that about it?

A. Not exactly, no, sir.

Q. All right. The basic quota is what, sir?

A. The basic quota also relates to the individual manufacturers, and a portion of that basic quota is assigned to the manufacturers and becomes what is known as a working quota.

[fol. 1697] Q. The basic quota relates to a particular manufacturer, is that true, or isn't it an overall thing?

A. My understanding of the way that the basic quota was established and works is that the manufacturers in the association, depending upon their history of exports, their previous exports, arrive at what they consider to be a reasonable export for the individual manufacturers. These were consolidated together and then was recommended to the government, and the government then reviewed this recommendation and, making what changes it saw fit, established the basic quota which applied to all the manufacturers.

Q. The basic quota is an overall thing, then, is that true?

A. That is my understanding of it.

Q. Yes. And as I understand it, of this basic quota, 90 per cent of it, or a per cent of it, is allotted to individual manufacturers.

A. Yes.

Q. What per cent? Seventy per cent? Eighty per cent?

A. That varies from quarter to quarter. It may be 70 or 80 or 100 per cent.

Q. But it might be 70 or 80, is that it?

[fol 1698] A. Yes, sir.

Q. Then am I right in understanding that the incentive quotas and the special quotas and so forth come out of the remainder? That is, assuming that they grant a working quota of 80 per cent, the special quotas and incentive quotas come out of the 20 per cent remainder?

A. Not necessarily, because in some years the total export can exceed the basic quota.

Q. And that is in a situation where a manufacturer gets a special out of a future quota?

A. No, that is in cases where the incentives plus the—if the working quota is assigned on a high percentage basis, then on top of that you have your incentives and on top of that you have your expected quota. This might all add up to something in excess of the basic quota.

Q. Do these quotas have any effect actually on the exports from Japan? Do they have any effect on the number of machines exported from Japan?

A. I would say so, yes.

Q. The prices that are established——

The Court: They have a definite effect upon the number exported by each individual manufacturer, don't they?

[fol. 1699] The Witness: Yes, sir, sold in export.

Mr. Elkins: Thank you, your Honor. That is the precise point we wanted.

Q. Now as to the prices that are established, as you described, do they have any actual effect or are they the prices that would be used anyhow?

A. They have—certainly they have an effect——

Q. All right. Now your——

Mr. Wesely: May the witness be permitted to finish his answer?

Mr. Elkins: I thought he did.

The Court: He did not say that there were fixed prices. He said there was a fixed minimum price——

Mr. Elkins: That's right.

The Court: —below which the machines could not be exported by a particular company.

Mr. Elkins: That's right.

The Court: It is a minimum price. They couldn't go below that price.

Q. So if it were not for that quota, more machines would be imported into the United States or exported from Japan into the United States than with the quota?

A. Very possibly so, yes.

[fol. 1700] Q. Well, I thought——

A. Yes, there would.

Q. And also the price of those machines imported would be lower than they are now; isn't that true—if it were not for the minimum prices established, as you have described it?

A. I believe so.

The Court: They might. We do not know whether they would or not. How does he know? They might.

Mr. Elkins: He seemed to know about everything else that went on in Japan, your Honor. He even knew who owned what, and everything else.

The Court: This is all right if you have a jury sitting in the box listening to this stuff, but don't hand it to me, please.

Q. Did you learn from your experience in Japan that the maximum quota and the minimum price were established in order to protect domestic industries to which the exporters were exporting? Did you learn that that was the purpose of the maximum quota and the minimum price, was to protect, say, for example, the United States industry from exports, from Japan? Did you learn that, sir?

A. No, I didn't.

[fol. 1701] Q. As a United States businessman in Japan, do you have associations with our consul there?

A. At times I have, yes.

Q. And haven't you learned from your association with our representatives of the Department of State in Japan that the purpose of the Japanese Government in imposing maximum quota and minimum price is, among other things, to protect the industry in the United States?

Mr. Wesely: Objection, your Honor.

Q. Did you—is the question.

The Court: The objection is overruled.

A. The thing that I have learned is that this was——

Q. No. Did you learn that, sir?

Mr. Wesely: Your Honor——

The Court: Wait. He is answering the question. Let him finish his answer.

The thing that you have learned—go ahead.

A. (continuing) The thing that I have learned is that these minimums and maximums that you speak of was to protect the Japanese industry, sewing machine industry.

Q. Did you ever confer with Mr. Thibedaux, Minister for Economic Affairs?

[fol. 1702] A. Yes, I have.

The Court: I see you are reading from some document. Is that an exhibit, Mr. Elkins?

Mr. Elkins: No, it is not, your Honor.

The Court: Sir?

Mr. Elkins: It is not an exhibit.

The Court: Oh, it isn't before the court—excuse me. I noticed it was a photostat of a document, and I thought it was an exhibit, and that I might look at it myself.

Q. Is there anything unusual in these various practices in Japan relative to sewing machines that does not—in relation to other commodities that are exported from Japan, that is, they have the same practices, regulations, as to all exports, do they not?

A. I——

Mr. Wesely: Your Honor, I am not entirely sure that the witness understands the question.

The Court: If he does not he will tell us. Apparently he does—he was preparing to answer.

Mr. Wesely: Counsel is having a little difficulty hearing that question. I wonder if you might direct the reporter to repeat it.

The Court: Will you repeat the question.

[fol. 1703] (Question read.)

A. I am not qualified to answer for the other industries of Japan. My understanding is that the regulations and controls for sewing machines are very serious, very extreme.

Q. Unusual?

A. Unusual.

The Court: "Unique" would be the word that you are grasping for?

The Witness: I understand it to be, yes.

Q. Did you get any of the information on which you have predicated your information from Mr. Thibedaux, Minister for Economic Affairs?

A. I don't recall ever having discussed this particular subject with Mr. Thibedaux.

Q. As to the matters on which you have testified here, have you received any information from Mr. Thibedaux?

A. I am sorry, I can't recall. Mr. Thibedaux left Japan, I believe, in 1958 or 1959. It was some time ago that I talked with him.

Q. You are telling us that you have never heard it said that "Voluntary quantitative quotas constitute the primary Japanese answer to charges of over-concentration and market flooding in the United States"? You have never [fol. 1704-1710] heard that said over there?

Mr. Wesely: Objection, your Honor.

The Court: You are reading from some paper, are you, Mr. Elkins?

Mr. Elkins: Yes. We will offer it in evidence, your Honor.

Mr. Wesely: Can it be marked for identification?

The Court: Yes, have it marked for identification.

(Marked Plaintiff's Exhibit 202 for identification.)

The Court: What is this paper that you are reading?

Mr. Elkins: That is a Foreign Service despatch, your Honor, from the U. S. Consul in Japan.

The Court: Better let Mr. Wesely look at it.

Do you want to look at it?

Mr. Wesely: Yes, your Honor, if I may.

(Document handed to Mr. Wesely.)

. . . . . .

[fol. 1711] Mr. Elkins: Your Honor, it might be necessary, in view of the recent testimony to call a representative from the Department of State—I mean, all of a sudden we hear a

witness testifying as to something which I submit is somewhat beyond his knowledge, but in order, now that it is on [fol. 1711a] the record, to clear it up——

The Court: You haven't established that it is beyond his knowledge.

• • • • • • •

[fol. 1712] UNITED STATES OF AMERICA

vs.

THE SINGER MANUFACTURING COMPANY

New York, June 12, 1961, 11 A.M.

The Court: All right, gentlemen, Mr. Fairman may resume the stand.

COLLOQUY BETWEEN COURT AND COUNSEL

FRED F. FAIRMAN, resumed.

Mr. Elkins: I believe we had marked for identification, your Honor, Plaintiff's Exhibit 201 and we had offered it in evidence.

The Court: We had some trade circular.

Mr. Elkins: A dispatch from the Department of State.

The Court: Which represented this Japanese cartel to be in the nature of sort of benevolent despotism, benevolent dictatorship.

Mr. Elkins: I won't agree with that characterization, your Honor, but the Court had asked if there are any objections. I would like to dispose of that, if we may, please.

[fol. 1713] The Court: You will recall that there was a paper marked for identification before we adjourned.

Mr. Pettit: Yes, your Honor.

The Court: Which apparently emanated from some trade agency of the government, and it has been offered in evidence.

Mr. Wesely: Is this Government Exhibit 202 which had been marked for identification?

Mr. Elkins: I believe it is 201.

The Clerk: 201 is the instruction book. This is Government Exhibit 202.

Mr. Wesely: No objection to the receipt of 202 in evidence, your Honor.

The Court: Let me see it. Maybe I have an objection. We have enough things in the record now.

So that I may understand just what position the Court may take with reference to this document which is now offered in evidence, does the government offer it in evidence as proof of its contents, too?

Mr. Elkins: Yes, your Honor.

The Court: And does the defendant consent that it be received in evidence as proof of the factual statements [fol. 1714] contained therein?

Mr. Wesely: Your Honor, it is a comprehensive document. For example, on page 2, there are clear hearsay on hearsay statements. Furthermore, for example, the second enclosure deals with a number of matters which do not possibly have any connection at all with this case, cotton textiles, plywoods——

The Court: Of course, we are not going to concern ourselves with those other items of commerce, but——

Mr. Elkins: As to those other items of commerce, your Honor, this witness was asked whether or not the export controls in Japan related to articles other than sewing machines.

The Court: Now I will continue: for instance, one part of this document purports to contain statements as to various Japanese laws. Am I to accept these statements as being accurate?

Mr. Wesely: Your Honor, to the extent that we can now determine, these statements are accurate statements, but they are not complete. These laws are quite comprehensive, and this is a three-page enclosure.

I would like to call your Honor's attention to the intro- [fol. 1715] duction to this statement of the law, which is enclosure 1, the legislative basis for Japan's production and export controls. In the first paragraph, which sets forth the general summary of this document, it says:

"These laws, together with the amendments, have, in effect, made it possible for industries in the export field to act in concert to limit production, determine methods of

sales, determine prices, standardize quality and, in general, to take such actions as are considered necessary for the stabilization of an industry and to meet foreign export commitments."

The Court: Yes, I have read that. It is the latter part of that first paragraph under "Introduction." All right, I think I understand now that I am to receive this in evidence as being a statement insofar as it concerns relevant matters, being a factual statement subject to such additional proof as either side wants to present by way of addition. Received in evidence by consent.

(Government Exhibit 202 for identification received in evidence.)

[fol. 1716] Cross-examination continued.

By Mr. Elkins:

Q. Mr. Fairman, are you acquainted with any material published by the United States Tariff Commission having to do with Japan's foreign trade, and more particularly as it relates to the reasons for export controls?

A. This is——

Mr. Wesely: Your Honor, we object. This is calling for an answer, even in a preliminary form, as to the reasons for export controls. Mr. Fairman is a businessman in Japan, and in that capacity, when we last met, set forth what his understanding in his capacity was as to purpose of these laws. We think that he has answered these questions on this line.

The Court: This is cross-examination. I will permit it. Objection overruled.

The Witness: Would you repeat that question?

The Court: We are here concerned, Mr. Elkins, as I want to point out—we are not concerned with the purpose of a foreign law; in fact, it is none of our business except in so far as it affects the United States commerce. If this law does affect United States commerce, importations into the United States, and attempts to regulate minimum prices or maximum prices or quantities, it imposes [fol. 1717] restraints on imports, irrespective of the benevolent purposes which prompted its adoption. It is a

restraint on the commerce of the United States since it affects our imports, therefore, our domestic market.

You know from your long experience in the antitrust field that it has forever been a defense of one charged with a monopoly or restraint, the purpose which activated them and the motives and the purposes which they sought to accomplish, beneficient or benevolent. We are not concerned with the purpose of these laws. It is, did they have an effect on the United States commerce by regulating and limiting importations into the United States.

Mr. Elkins: We are concerned, your Honor, with the testimony of this witness, and the picture that has been created through this witness, and our purpose for this interrogation is to explore his knowledge of the situation inasmuch as there was testimony given.

The Court: I am going to permit you to do that, but my observations were prompted, as I said at one of our very recent sessions—that is, here the government charges an unlawful act on the part of the defendant as directed only against Japanese importations.

[fol. 1718] Now if those Japanese importations are importations of a government-controlled monopoly or cartel, I do not know that the antitrust laws can be used for such purpose. I don't know that even if the charge that the government makes here against the defendant was in fact true—and I have nothing that leads me to that conclusion as yet—whether or not the antitrust laws of the United States can be used to protect a cartel of a foreign government which affects and interferes with the importations into the United States and the price and the quantity of those importations.

Mr. Elkins: Of course, your Honor, we do not accept this as being any kind of cartel whatsoever—defining a cartel for this purpose, I suppose, as being some kind of unlawful combination. We do not accept that.

The Court: A cartel would be an agreement between one or more manufacturers in regulating price, dividing territory, providing for an unlawful exchange of patent information and patent licensing, or assigning quotas.

That is generally my understanding of cartels—and I think it must be yours, too. All right.

[fol. 1719] Mr. Elkins: This line of interrogation——

The Court: I am going to permit it. Let us get back. I simply wanted to point out, as you know it is my custom, the problems that come to the Court's mind as to the admissibility of evidence. I am sure those things must come to your mind, too.

Mr. Elkins: That is not so, your Honor. I have no problem.

The Court: With your vast experience.

Mr. Elkins: With my vast experience, I have no problem. When I say "vast experience" I am quoting your Honor because I cannot accept it as being true.

The Court: I might say I consider you an expert. I have seen you work here for a number of years very effectively and very efficiently and competently. All right.

(Question read.)

Mr. Wesely: Your Honor, I would like as an objection to point out to the Court that this is exceeding the scope of Mr. Fairman's direct testimony.

The Court: I am going to permit it. You have an exception. Objection overruled.

A. I cannot recall reading any documents issued by the [fol. 1720] United States Government on this subject. I have read on this general subject in the newspapers.

Q. In relation to the export controls in Japan, have you heard any reference to the United States anti-dumping statute?

A. I have, yes.

Q. And haven't you heard that one reason for these controls on setting a maximum quota and a minimum price is to avoid any possible violation of the United States anti-dumping statute?

Mr. Wesely: Objection, your Honor.

The Court: Overruled.

The Witness: Would you mind repeating that question.

(Question read.)

A. I have heard that the Japanese Government has been concerned with the possibility of causing some criticism in foreign markets which might do damage to its own industry.

Q. In relation to exports.

A. In relation to exports.

Q. And wouldn't that damage be regulations, for example, by the United States Government to restrict imports from Japan?

[fol. 1721] The Court: I think you are getting pretty far afield. Ojection sustained.

I have permitted your questioning so that you might test this gentleman's knowledge on the subject. I think he is pretty well informed.

Mr. Elkins: I have no further questions.

The Court: Any redirect?

Mr. Wesely: May I have a moment, your Honor?

The Court: Yes.

Redirect examination.

By Mr. Wesely:

Q. Mr. Fairman, do the various export controls of Japan about which you have testified apply to the entire Japanese sewing machine industry?

A. No, they do not. They apply to the household sewing machine, but in case of industrial sewing machines, which takes up a very, very minor part of the exports, there are not these controls.

Q. And what is the principal source of funds expended by the Japan Export Trade Rehabilitation organization?

A. The Japanese Government.

Mr. Wesely: I have no further questions, your Honor.

The Court: Thank you.

(Witness excused)

[fol. 1722] CHARLES F. BRUDER resumed.

Mr. Klots: If your Honor please, I have one or two questions of Mr. Bruder just to clear up some things we sort of left up in the air.

In the first place, you will remember we offered in evidence as Exhibit 166 for identification a list of prices

at which straight stitch machines could be bought throughout the United States, and it was objected to by the government, and the government was asked to consider whether they would reconsider that objection and not object to it on the ground of competency.

Of course we are not asking them to consent to it on the ground of relevancy.

I would like to know whether the government is willing to withdraw its objection on the ground of competency of that list.

It is entirely similar to the list that was already agreed to in the stipulation of facts as to other types of machines, but it relates to straight stitch machines.

Mr. Elkins: We object to it, your Honor.

Direct examination continued.

By Mr. Klots:

[fol. 1723] Q. Mr. Bruder, have you recently had occasion to ascertain prices at which straight stitch machines which will take zigzag attachments are being sold in retail markets?

A. Yes, sir, I have.

Q. Tell us what you did in that regard.

A. I personally went on a little shopping tour and visited several outlets in Westchester County and several in Bergen County.

Q. And did you obtain the prices of certain straight stitch machines which take zigzag attachments, and if so will you tell us what those machines were and what the prices were.

[fol. 1724] A. I shopped a sewing machine store in New Rochelle, New York, called Leiner's, and I told the proprietor that I was interested in obtaining a machine for my wife for a present. I found that I could get a very special buy because this dealer "had just obtained a school order at a special price" and he had a couple of machines left that I could have "at the special price," the Necchi plain stitch or straight stitch Supernova for $136.95.

At another dealer in Mt. Vernon, New York, I learned that the Necchi Supernova was $169.50 in his store, and in an effort to get a discount I told him I had a good used

machine, and he said I might be able to get $20 or possibly $30 for that machine if it was an especially good one, after he saw it.

Q. Both of those machines were straight stitch machines?

A. Yes, sir. He also had in this store a Pfaff straight stitch machine which was regularly $169.50, but he could give me a $40 allowance on that, making it $129.50.

At Wakefield's in Yonkers, New York——

The Court: Wakefield is in the Bronx.

A. (Continuing)—I found I could get a Pfaff No. 6 [fol.1725] which seemed to have a different finish on it than the other Pfaff machine which I saw. $149.50 with an allowance of $20 for an old machine.

At Winthrops, which is one of a group of three stores or chain of stores in northern New Jersey—I visited the Winthrops in Hackensack—I found that the Necchi Supernova was $229 and he didn't even want to talk about an allowance on the Necchi Supernova.

Q. Is that a straight stitch machine?

A. That was a straight stitch machine. He also had a machine there with the Winthrop name on it that I noticed from the identification, after looking carefully, was made in Japan. This, too, was a straight stitch machine, and the list price on it was $249. But, when I told him that I thought that seemed very high, even higher than the Necchi, and pulled out my wallet and wanted to know what we could really do, cash on the barrelhead, I found I could get a $60 discount, so that the net price was $189.

I also visited Sears Roebuck in Hackensack, and I find that you can buy a straight stitch portable, Model No. 76, for $126.95 which will take the Greist decorator attachment which they also sell through Sears' catalog and stores.

[fol. 1726] Q. Does that cover your shopping tour?

A. That pretty well covers it, yes, sir.

Q. Now, Mr. Bruder, I show you this sheet tabulation which purports to show the production figures and the sales figure of Singer household sewing machines for the years 1947 through 1959 and I ask you, Mr. Bruder, whether you have personally checked from the records of the company itself the figures on this list except, I believe, certain figures

that are already in evidence. Tell us which ones you have not personally checked.

A. I personally checked all of the production figures from the years 1947 to 1959, inclusive, by examining the year end reports which are kept factory by factory of their production for the year, and I had adding machine slips placed on each pile of reports and I checked the adding machine entries against the figure on the actual report in arriving at these totals. I did the same thing on sales 1956, 1957, 1958 and 1959. I did not go back of that on sales.

Mr. Klots: Would you read the answer, Mr. Reporter?

(Answer read.)

Q. Have you here a memorandum of these sales figures [fol. 1727] that you checked?

A. I am sorry. I do not understand your question, sir.

Q. Have you a memorandum which shows which of this group of sales figures on this exhibit? And sales figures appear from '47 to '59. Do I understand you to say that you checked the ones from '52 on or the ones from '47 on?

A. No, I did not check the early years. I have some notes, actually, in my briefcase——

Q. That will show you just which you checked?

A. If I could refresh my memory of the ones I checked.

(Briefcase handed to witness)

Q. I call your attention to the fact that the sales figures for '52 to '59 are already in evidence and——

A. Well, I did check them out and I find now, when I go back and look at my notes, that I subsequently went back and checked out from 1947, '48, '49, '50, '51 and '52 on a second check.

Q. So that you made a check of those early ones and rechecked the ones that were already in evidence.

A. Against our regular year end forms 246.

[fol. 1728] Q. And those figures that you checked appear on this document that I have just handed you?

A. They are all the same.

Mr. Klots: I offer it in evidence.

Mr. Elkins: We object to that. In the first place, it relates to all household sewing machines of Singer, and

this case does not relate to all household sewing machines of Singer.

The Court: We will receive it in evidence. Objection overruled.

Mr. Elkins: We also object, your Honor, on the best evidence rule.

The Court: Overruled.

(Received in evidence as Defendant's Exhibit 172.)

The Court: You gathered this information from the records, and this is an extract of the records kept by the Singer Company in the regular conduct of its business?

The Witness: Yes, sir, I did.

Mr. Elkins: Inasmuch as this does group together all sales of Singer of household sewing machines, going far beyond the subject matter of this complaint, may we ask [fol. 1729] for what purpose it is being offered, your Honor?

The Court: Most likely counsel will accommodate you with an answer.

Mr. Klots: Yes, I think it's purpose is to show what has been the trend of the Singer sales over the course of the years, how they have increased in spite of competition, all different types of machines.

There is another purpose, your Honor. The chart, which we intend to put in evidence, gives the figures of the Census Bureau as to all American-produced machines, but it does not separate the ones that are not Singer machines. So the only way you can find out the ones that are not Singer-produced machines is to take the Singer production figures and subtract them from the figures that appear on the Census Bureau figures.

The Court: Let me see if I understand this Exhibit 172. You have a column here headed "Production." Does that mean that the Singer Sewing Machine Company produced in its United States factories the number of machines listed below?

The Witness: That is right, sir.

The Court: Now the last column which is "Sales." Does that mean that that is the total number of Singer sewing [fol. 1730] machines sold in the United States, irrespective of where they were produced or manufactured?

The Witness: That is correct. These are the unit sales of household sewing machines only (indicating).

The Court: Of Singer machines.

The Witness: Singer household sewing machines.

The Court: So that, if I read this correctly—it runs back since 1952—Singer sold machines, manufactured by it abroad, in the United States in excess of those which were manufactured here.

The Witness: That is right, sir. For example, from recollection, the first year that we sold machines imported from one of our factories abroad was in 1949 when our sales, as you see, were——

The Court: 104,000 more than your production.

The Witness: That's right, and that was the year that we had a strike, again from memory, in our Elizabethport factory.

The Court: So that for 1959 you sold almost 200,000 machines—more than that, 220,000 machines—which were manufactured abroad, sold them in the United States.

The Witness: Yes.

[fol. 1731] The Court: All right.

Mr. Klots: Just another question here about this chart which is already in evidence. I just wanted him to tell us what type of machines these various ones are because they include machines we have not talked very much about yet, and this is Exhibit 162.

The Court: May I just interrupt for a moment? Wouldn't this last exhibit have a substantial bearing on whether or not there are exceptions to government's contention that Singer entered into an unlawful conspiracy with Gegauf and with Vigorelli, even with Messerschmitt, when it shows that Singer was itself bringing in 220,000 machines which it manufactured in Europe, that they were engaged in very active competition with those with whom you allege they were conspiring?

Mr. Elkins: The answer is no, your Honor, I don't attach any significance to it.

The Court: Of course, that is a consistent answer, but I just point that out to you. Here is something that strikes me very forcibly. The government alleges a conspiracy between Singer, Gegauf and Vigorelli to stop Japanese [fol. 1732] importations of a particular type, that they

were working together with these European manufacturers. Yet here you have Singer engaged in active competition with their two alleged conspirators, bringing in over 220,000 machines manufactured in Europe in one year, in 1959.

Mr. Klots: I think your Honor has a good point there.

Mr. Elkins: I see nothing inconsistent, your Honor.

The Court: All right. Ordinarily you do not get these conspirators hitting one another on the head that way, you know. There is a little bit of harmony of action between them. All right.

Mr. Elkins: I would say ordinarily conspirators make their conspiracy and then go ahead and sell their machines. We don't say that Singer agreed to get out of the business or that Gegauf agreed to get out of the business.

The Court: Just that Singer conspired to keep out the Japanese machines from the United States.

Mr. Elkins: That takes care of the conspiracy allegation, your Honor, yes.

By Mr. Klots:

[fol. 1733] Q. Mr. Bruder, if you will turn to this chart, Exhibit 102, I just want to ask you what type of machines these various ones are. We know what the 401 is and we know what the 319 is. What was the 185?

A. The 185 is a straight stitch machine.

Q. What is the 99?

A. And the 99 is also a straight stitch machine. Both the 185 and the 99 are sometimes called a three-quarter size head.

Q. The 301 I think we know.

A. Slant needle, straight stitch.

Q. Yes. The 221 is what type?

A. It is a small, featherweight portable straight stitch.

Q. And the No. 15 is what?

A. 15 is also straight stitch.

Q. The 201 is what?

A. Straight stitch.

Q. And the 66?

A. 66 is straight stitch.

Q. And the 306?

A. The 306 is a zigzag machine.

Q. What is this miscellaneous? This is in 1958. Well, [fol. 1734] it is in every year, a small miscellaneous group. What would that cover?

A. This would cover models which had been discontinued and where the stocks and sales were so small that they are lumped together.

Q. What is the 192?

A. The 192 is a straight stitch machine.

Q. I think I have covered all the ones that we haven't already talked about.

A. Yes.

[fol. 1735] Mr. Klots: If the Court please, we had marked for identification Defendant's Exhibit 164 which was a news advertisement which we said was to be published in certain newspapers. We had no proof at that time that it had been published in any particular newspapers. I have here two newspapers in which that advertisement appears. One is the Journal-Herald of Dayton, Ohio for June 15, 1960, and I would like to offer that in evidence.

Mr. Elkins: No objection to that.

Mr. Klots: And the other is the Cincinnati Post for June 15, 1960 on page 23. I don't think we want the whole Post, so I would like to offer page 23 where that particular advertisement appears.

Mr. Elkins: No objection.

The Court: What is that page proof number in evidence?

The Clerk: The proof is 164.

The Court: Then make these newspapers 164-A and 164-B. In that way we will have them all related.

(Received in evidence respectively as Defendant's Exhibits 164-A and 164-B.)

Mr. Klots: Counsel for plaintiff have been good enough to say that they would add a paragraph to the stipulation [fol. 1736] of facts which relates to advertisements that were published in mail order house catalogs, and this had been revised, and in this form I understand counsel are willing to sign the stipulation. Every one of those advertisements appearing annexed to that stipulation has been checked, as I say, by my office, and they appear in the catalogs indicated. I understood from Mr. Weinstein that

that would be agreeable to them. We talked over the telephone on Friday.

Mr. Elkins: The stipulation is not in the agreed-upon form, your Honor.

Mr. Klots: I would like to know in what respect it is not.

The Court: Suppose you do that off the record and during the recess.

Mr. Klots: Yes. I must say I am perfectly amazed because we put it in exactly the form agreed upon.

The Court: I prefer that these discussions concerning stipulations be off the record. All right, let's proceed with something else in the interim.

By Mr. Klots:

Q. Mr. Bruder, one more question. Do you know of any instance where customers have exchanged a machine for the machine-carried multi-cam device for straight stitch [fol. 1737] sewing machines?

A. Yes. In the course of my travels and visits to Singer shops I have run across a number of examples.

Q. Can you give us one?

A. Yes. I was out in Columbus just a couple of weeks ago and made a particular note of one example that I found there. In examining the shop and asking questions about their business, I noticed a Stradivaro, so-called built-in multi-cam zigzag machine, being offered for resale as a trade-in for $49.95, and the machine appeared to be in such excellent condition that I asked to see the records on it. I wanted to find out what had been allowed, whether they were exceeding company allowances and the circumstances of the sale. I found that the machine had been traded in on July 2, 1960 from a party by the name of Carr residing at 754 Robin Wood, Columbus, with an allowance of $9.95 given for the machine on a sale of a 185 Budget straight stitch portable. The customer claimed she had paid $169.95 for the machine less than six months before.

The machine was sold to a Mrs. Kinser, that is, the Stradivaro machine was subsequently sold to Mrs. Kinser, 637 Pierce Avenue, Lancaster, Ohio for $49.50.

Q. After it had been put in condition?

[fol. 1738] A. After it had been tuned up and put in condition. That was early in 1961. Mrs. Kinser, in May,

1961, traded in this Stradivaro built-in multi-cam machine and was given the same $49.50 that she had paid for it on a 404 with a zigzag attachment. This is just one example in which I made detailed notes of what we do find occurring.

Q. Mr. Bruder, one other question and then I am through. I think you have already testified in the record that Sears, Montgomery Ward, Spiegel and Alden's were mail order houses selling sewing machines in the United States. What have you to say as to the volume of business that these dealers do as compared with other dealers in the United States?

Mr. Elkins: Objection, your Honor.

Q. Just in general.

The Court: Overruled.

A. Sears Roebuck, next to Singer, does by far the largest volume of sewing machines in the United States. Based on the best information which we can obtain, we believe that their sales run in the neighborhood of 200,000 units a year. Montgomery Ward, I would place right after Sears, although their sales I don't believe run more than 75,000 to 90,000 a year.

[fol. 1739] Q. Never mind the figures; just go ahead.

A. Spiegel's and Alden's are both substantial distributors of sewing machines.

Mr. Klots: I have no further questions.

Cross-examination.

By Mr. Elkins:

Q. Did you refer to that Stradivaro as a so-called built-in cam machine, sir?

A. Yes, I did.

Q. Does it have built-in cams?

A. Yes, it does.

Q. And then it is a built-in cam?

A. The only reason I used the expression——

Q. It is a built-in cam?

A. It is an incomplete description of a sewing machine.

Q. It is a built-in cam?

A. It has a built-in cam device.

Q. I would like to direct your attention, Mr. Bruder, to Defendant's Exhibit 154, which is an advertisement of the

401 machine about which you have testified; is that right, sir (handing witness)?

A. Yes, sir.

Q. Isn't it a fact, sir, that this advertisement emphasizes in its text those features which appear in a household [fol. 1740] sewing machine for the first time?

A. Not all of them, and they also——

Q. I did not say it was all-inclusive.

A. Right.

Q. The question was, does it emphasize those features or features which appear for the first time in a household sewing machine?

A. No.

Q. And are——

A. No. You used the expression "household sewing machine", right?

Q. Yes, that is right.

A. Take for example "First automatic with a slant needle and gear motor drive".

This feature had appeared in a household sewing machine but not a swing needle machine.

Q. Very well. It emphasizes, does it not, the things that are first in this 401 machine?

Mr. Klots: May I ask what he means by "emphasize"? Does he mean "point out" or what does he mean by "emphasize"? I thought I might ask counsel to explain that.

Mr. Elkins: I mean emphasizes. I cannot find a better word for it.

[fol. 1741] Q. Doesn't this say——

The Court: "Emphasizes" means to put an accent on it.

Mr. Elkins: Yes, that is about it, right.

The Court: To stress.

Mr. Klots: Doesn't that involve a conclusion?

The Court: I think it does. Suppose you reframe it.

Q. Doesn't the text of this advertisement underneath the three pictures—and the only three pictures that are shown—state "First automatic with a slant needle and gear motor drive", et cetera?

A. Right.

Q. "First automatic with a drop-in bobbin in front of needle", and so forth?

A. Right.

Q. And "First automatic with a snap up stitch chart on top that lets you 'tune' knob for all kinds of fancy stitches".

A. Right.

Q. So that every feature there described is a "first", is it not?

A. On that kind of a machine, yes, sir.

Q. In this advertisement, yes.

[fol. 1742] Now at the time of this advertisement, Singer was not the first to have a built-in cam machine, was it—or this 401 was not the first machine to have built-in cams, was it?

A. No. You mean built-in multi-cam.

Q. Built-in plurality of cams, yes.

The 401 was not the first machine to have a built-in plurality of cams, isn't that true?

A. Speaking from the point of view of when it was placed on sale to the public?

Q. Yes, yes.

A. That is right, it was not.

Q. Brother International had a built-in cam machine on the market in 1954, did it not?

A. I don't recall.

Q. Do you recall that Brother International had a built-in cam machine?

A. Yes.

Q. Do you have any recollection as to when it was put on the market?

A. No, I am sorry I don't. I would have to go back and check the magazine ads or something of that kind.

Q. Do you recall that it was before Singer put its 401 [fol. 1743] machine on the market?

A. Yes.

Q. Do you recall that it was before Singer puts its 319 machine on the market?

A. I think it was but I wouldn't—I couldn't be sure without verifying it.

Q. You are acquainted with the Singer sales, are you not?

A. Yes, sir.

Q. And perhaps it would be accurate to say that you are the man primarily responsible for the Singer sales?

A. Yes, sir.

Q. Is it true that you would be acquainted with any machine of a competitor that was hurting Singer or hurting the Singer sales?

A. I try to keep informed on all competitive conditions, yes, sir.

Q. Now may I direct your attention, if I may, to that part of Defendant's Exhibit 154, the 401 ad that states "First automatic with a snap up stitch chart on top that lets you 'tune' knob for all kinds of fancy stitches", and ask you, sir, as between the snap up chart and the fact that the operator may tune in a stitch, so to speak, and, [fol. 1744] as you say, merely by turning a dial, which would you say was the most significant feature of the two?

A. Between the knob and——

Q. Between the snap up chart and the dial or knob, which permits the operator to, as your ad says, "tune" in a stitch or getting it automatically by merely turning the knob.

A. Well, it is—the ad states it is the combination, the convenience of having the eye-level stitch chart as the guide to the tune-in knob.

The Court: You mean you have a chart right in front of you?

The Witness: Precisely.

The Court: You have a visual guide readily available?

The Witness: Eye-level, visual guide readily available rather than turning to a separate guide in the drawer of the machine or instruction book.

The Court: By that you mean the little flip-up that flips up at the top?

The Witness: Yes, sir, this (indicating). This is the key, how to tune the two knobs.

Q. It would be possible, would it not, to put a chart of [fol. 1745] some kind on a 403 machine which would identify the stitches in relation to the various cams?

A. Yes, sir, it would be.

Q. So as between the snap up chart, sir, and the built-in cams of the 401 machine, and the ability of the operator to change a stitch by moving a dial, which in your opinion is the more significant feature?

A. I am sorry, you have lost me there—would you reread the question, please?

(Question read.)

A. Well, I am not trying to quibble but——

The Court: What do you mean——

I don't really get what you have in mind, Mr. Elkins. What do you mean by the more "significant feature"?

Mr. Elkins: If your Honor please——

The Court: Significant from what point? From the point of view of sales? From the point of view of operation?

Mr. Elkins: In short, your Honor, I am using the expression as it has been used, oh, at least two dozen times in the trial to date—and I mean most significant in relation to sales, in relation to the consumer, in relation to the machine and its salability.

[fol. 1746] The Court: You mean which induces—which is most attractive—by "significant" you mean which feature of the machine is most attractive to a potential buyer?

Mr. Elkins: I mean which feature of the machine is the most significant in relation to the salability of the machine. I cannot say it any differently, your Honor.

The Court: I do not know what you mean by "salability of the machine".

Objection sustained because it is indefinite and I cannot understand it.

If the witness understands it he may answer it.

Do you understand what he means?

The Witness: I don't quite get it. I tried to explain that they go together.

Q. Haven't you previously testified, sir, as to the most important features of the 401 machine—haven't you, honestly now?

A. Yes, I have.

Q. All right. So having that testimony in mind, can you tell me now which is the more important feature here: the snap up chart or the dial which enables the operator to tune in a stitch?

[fol. 1747] Can you do it?

A. I am afraid I can't. You see, you are trying to—as I understand the question——

The Court: Speak out. Tell him what you have in mind. He is trying to what? What do you have in mind?

A. You are separating two things that go together——

Q. I understand that.

The Court: Wait. Let the witness finish. Speak out. We are not here to match wits.

Mr. Elkins: I hope not.

A. May I illustrate?

[fol. 1748] The Court: Yes, certainly. I want to find out.

(The witness leaves the stand and demonstrates on a machine.)

The Court: The witness steps down to the machine, 401, and places his hand in front of the snapup chart, obscuring it from view.

The Witness: If this chart is obscured from view, the operator just has nothing but trial and error to determine the stitches to come from the machine. She is just groping in the dark.

The Court: Unless she memorizes those various numbers with the patterns.

The Witness: Precisely, so they go together. That is all I am trying to say.

Q. Thank you.

(The witness resumed the stand.)

Q. Don't you have with other machines a directory that informs the operator what stitch she will get with what particular cam?

A. I don't remember specifically whether that is in the instruction books, but the fashion dises have an identification on them that shows the basic pattern that that dise will create.

[fol. 1749] Q. It is a simple matter, is it not, to acquaint the operator with what stitch she will get from the use of a particular cam or combination of cams without putting it necessary on a snap-up chart?

A. You can have it in an instruction book. You can have it on a Celluloid wheel, but the point is we put it on there

because it is a valuable and convenient and attractive feature, we believe.

Q. Very well. So we have determined that it can be done in other ways, and that here with the 401 machine you have done it by putting it on this snap-up chart which has been described?

A. That's right.

Q. In relation to the salability of the machine, which would you say was the more significant feature: the snap-up chart or the fact that you may, as you say in your ad, "Tune in a stitch by switching the dial which appears in front of the machine"?

A. I repeat that the value of the tuning dial feature is related to the chart which makes it easy for the woman to tune the two dials that must be tuned. This is the sales approach that we have used—rightly or wrongly.

Q. Well, right now you cannot tell me, or you cannot [fol. 1750] answer the question any better than you have thus far?

A. I am sorry, sir, no.

The Court: You don't have to be sorry about it.

Q. May I direct your attention to Defendant's Exhibit 158 (handing). My copy is a photostatic copy, but can you tell us from that photostat what machine is advertised there?

Mr. Klots: What is the exhibit number?

The Court: Give him the original of 158—a picture of the model—the female model with the colored dress.

(Document handed to the witness.)

A. Yes, I recall it.

Q. This advertisement would be charged to the Singer 401 machine, wouldn't it?

A. Yes, it would be.

Q. The banner line on that ad is "What's the Newest Slant on Holiday Sewing?" is it not?

A. Yes.

Q. And it relates in its text to the slant needle, isn't that true?

A. Yes, sir.

[fol. 1751] Q. You also have a slant needle in the 403 and the 404 machine, isn't that so?

A. Yes, sir.

Q. Now addressing ourselves to the 403 machine, doesn't this advertisement present in its text features which are in the Singer 403 machine?

A. Yes, sir.

Q. And yet you testified that no part of the cost of this ad is attributed to the Singer 403 machine.

A. That is true.

The Court: What significance does that have? First you lead him into making such a statement and then you want to question it. What is its relevance at all? I do not see what it has to do with this case.

Suppose they charged it to the 404? Suppose they did not charge it? I don't see——

Mr. Elkins: If there is significance to the testimony on direct as to the amount of money that is spent or was spent in advertising the 401 machine, the significance of this is to show the allocation of advertising funds is, at the very, very best, an inaccurate and loose and frequently unjustified allocation, in that the very advertisement which is charged to the 401 might feature in its text those parts of the—those things which are common to the 403 machine, [fol. 1752] which are common to the 404 machine.

The Court: But the only machine that is depicted in this advertisement is the 401.

Mr. Elkins: That's right.

The Court: Here, you take this other exhibit, Exhibit 200, and you have got the three slant-needle machines shown. I suppose——

How did you apportion this amongst the three machines?

The Witness: Apportioned it amongst these three according to the space taken for each.

The Court: There has to be some arbitrary apportionment. I do not see that it is too vital to this case, anyway.

Mr. Elkins: Well, we would agree with that, your Honor. We agree that it is completely arbitrary and enough to give a shock to any kind of accountant who would look for it.

Mr. Klots: We don't agree with that, of course.

Q. Doesn't this advertisement which is referred to, De-

fendant's Exhibit 158, generally advertise the Singer sewing centers?

A. Yes, we advertise our name in our ads.

[fol. 1753] Q. That's right, and this particularly advertises the Singer sewing centers, too, doesn't it, in addition to your name?

A. This is our traditional sign-off on all advertising, yes.

Q. If a customer came into the store in response to this advertisement and bought a 403 machine, you would not call up your accountant and have part of this ad attributed to the 403, would you?

The Court: Objection sustained. The Court's objection. Next question.

Mr. Elkins: I do not see why we are not entitled to go into it.

The Court: The Court does not wish argument on it. Next question.

Q. You testified, did you not, Mr. Bruder, before the United States Tariff Commission on a hearing that was held in relation to the Singer petition?

A. Yes, sir, I did.

Q. And that hearing and your testimony was before the complaint was filed in this case, isn't that so?

A. Yes, sir.

Q. In discussing the Singer 401 machine you testified, did you not, at page 206:

[fol. 1754] "This machine incorporates a multiplicity of cams with a simple tuning dial on the front, the kind of a tuning dial that any woman might use on a television set or any other automatic apparatus."

And you went on to say:

"I might compare the advantages of that tuning dial to the advantages of a record player which plays eight or nine records compared to going over and placing one record on at a time."

You so testified, sir?

A. Yes, sir.

Q. In that testimony you were pointing out for the bene-

fit of the Commission, were you not, the advantages of a machine-carried or a built-in cam machine over the replaceable type cam machine?

A. Yes, sir.

Q. And you demonstrated the difference, did you not, by an analogy to an automatic record player as opposed to a record player, where the record had to be changed for every different tune?

A. As a spur-of-the-moment analogy.

Q. That is what you did, is that right?

[fol. 1755] A. Yes.

Q. All right. You also testified, did you not, at page 302, in relation to the 401 machine:

> "This machine gives the woman the versitility of a combination of cams, and the further advantage that even if she only wants to use one at a time, she is not opening up the lid, removing the individual cam and replacing it with another cam.
>
> "It seems to me the advantages of this are obvious."

You so testified, did you?

A. Yes, sir.

Q. And the first part of that testimony, when you stated "This machine gives the woman the versitility of a combination of cams"—you were referring, were you not, to the fact that the Singer 401 machine has two followers which can engage different cams and combine their intelligence?

A. Correct.

Q. Now you went on to say in that same testimony: "even if she only wants to use one at a time, she is not opening up the lid, removing the individual cam, and replacing it with another cam"?

[fol. 1756] A. Right.

Q. And there you are comparing for the benefit of the commissioners of the Tariff Commission a built-in cam or a machine-carried cam machine with a replaceable cam machine, isn't that true?

A. Correct.

Q. And in relation to the latter statement, as we have just read it, you went on to say:

"It seems to me the advantages of this are obvious," did you not?

A. Yes.

Q. Now in all of this testimony may we assume that you intended to give a true and honest impression to the commissioners of the Tariff Commission?

A. Of course.

Q. Now in further testifying as to the 401 machine in relation to a replaceable cam machine, you testified, did you not, at page 299:

> "The chief difference would be that with the built-in cams in the 401 Slant-O-Matic, the operator is not restricted to the use of one cam or a fashion disc but can use a combination of cams, and someone who is very good at mathematics can figure out the progres-
> [fol. 1757] sion when you get nine numbers in various combinations as to the tremendous variety of stitches you get, but it is enormous."

Is that true?

A. That is true.

Q. And there again you were referring, were you not, to the fact that your 401 machine has two followers which independently engage different cams?

A. Yes.

Q. At the same time?

A. Correct.

Q. Did you notice, sir, in referring to the built-in cams in that testimony that you did not say "so-called built-in cam machine"?

A. I was talking about——

Q. You did not state that, did you? You did not use the word "so-called" as you did in your direct testimony only a few minutes ago? You did not use the expression "so-called," did you?

A. I did not describe the machine that way.

Q. You used the expression—well——

A. Read the whole sentence, please.

Q. "The chief difference would be that with the built-in cams in the 401 Slant-O-Matic"——

[fol. 1758] A. I did not describe it as a built-in cam machine. I said "with the built-in cams in the 401"—describing one of the features of the 401.

Q. I see. So when you described the machine you say "so-called built-in cam," but when you describe the feature you merely say "built-in cams"—is that the sum and substance of it?

A. I think that the reason, I should explain——

Q. No, wait. Is that the sum and substance of it?

Mr. Klots: I think he may answer it.

The Court: Let him finish his answer. If you do not like it you may move to strike it out.

A. I think if you describe a machine by identifying it by one feature you are limiting your description in a way that doesn't tell what the other desirable features of that machine may be.

If you are talking about a specific machine and say "one of the features is built-in multi-cams," this to me is perfectly accurate. It makes no reference to all the other features.

Q. In further testifying as to the Singer 401 machine in relation to a replaceable cam machine, you stated——

Mr. Klots: Page, please. May we have the page?

[fol. 1759] Mr. Elkins: 299.

Q. You stated, referring to the 403:

> "She can get a wide variety of stitches if you mean that if there are 15 cams available she can get 15 stitches, but if we go back to commutations, like the probability of getting 13 spades in a bridge hand, there are enormous possibilities in the combining of the pluralities."

There, sir, you are again referring to the feature of the 401 machine which embodies two followers which simultaneously engage different cams?

A. Yes, sir.

Q. Now in relation to this feature of the 401 machine and the two followers as we have just described it, you intended,

did you not, with this testimony to give the commissioners of the Tariff Commission a true impression?

A. Of course.

Q. Now, Defendant's Exhibit 107, which is the Gegauf 1 mechanism (handing), does not have that feature, does it, sir?

A. No.

Q. That is, the ability of using two followers to engage [fol. 1760] different cams?

A. No, it does not.

Q. Wouldn't you say, Mr. Bruder, that a built-in cam machine was more competitive to the Singer 401 than a replaceable cam machine?

A. You would have to tell me about all of the other features on the machine. Does it have cam control feed? Does it have a built-in buttonholer? Does it have a pattern elongation device?

Your description is too incomplete for me to be able to make a fair——

Q. You just cannot say from the description as I have given it to you?

A. That's right.

Q. You just cannot say?

A. That's right.

Q. Didn't you represent to the United States Tariff Commission that the importation of built-in cam machines, which had this Gegauf 1 type of mechanism, would hurt the Singer sales of the Singer 401 machine?

A. Will you rephrase the question?

Q. Do you want the reporter to read it?

A. Would you please?

(Question read.)

[fol. 1761] A. Yes, I did. I don't remember the exact testimony.

Q. That was the substance of your representation to them?

A. Yes.

Q. At the time you testified before the United States Tariff Commission, there were replaceable cams available, were there not?

A. Yes, sir.

Q. And yet your representation to the Tariff Commission, as you have just described it, was made even though these replaceable cams were available?

A. Read the question again, please.

(Question read.)

Mr. Klots: I object to the question as argumentative.

The Court: Yes, it is. Objection sustained.

Q. Sir, I believe you testified that a great deal of training material was sent from Singer headquarters to the various sewing centers, Singer sewing centers.

A. That's correct.

Q. Did you select the two pieces of that training material that were put into evidence—I believe as Defendant's Exhibits 168 and 169 (handing)?

[fol. 1762] Mr. Klots: May I ask what you mean by "select"? Did he select for what purpose or when and where?

Q. Did you select those two pieces of material for the purposes of this trial?

A. No, I did not.

Q. You did not. Directing your attention to Defendant's Exhibit 168, which is a bit of a chart, that is part of a book, is it not, that is sent to the Singer sewing centers?

A. To the best of my recollection this piece was sent out, as I think I testified, late '57 or '58. This piece was included as an insert in a shop meeting guide, similar to this shop meeting guide (indicating).

That is just my recollection of it, sir.

Q. You did not select them for submission?

A. No, sir.

Q. In relation to this trial?

A. We turned over advertising, sales promotion and a lot of materials, of course, but I did not select that.

Q. Is this training material which is sent out by your office under your control? Do you supervise it in any way?

A. Yes. The Director of Sales Promotion reports to [fols. 1763-1768] me, yes.

[fol. 1769] Cross-examination (Continued)

By Mr. Elkins

Q. Before the introduction of the 401 machine, you or your staff were required to conduct a market survey, were you not, in relation to its potential sale?

A. In the—how do you use—what is your definition of "market survey"?

Q. Let me ask you whether you were required to conduct some kind of market analysis, a market projection in relation to the prospective sales of the 401 machine?

The Court: Did you make an inquiry about possible customer acceptance of the projected Model 401?

The Witness: In that sense, your Honor, no, we did not make a customer survey. That is why I raised the question about it in the sense that market surveys are sometimes made with a description of a product and then trying this on the consumer to see how it would make out—no. We made sales projections, yes.

[fol. 1770] Q. You made sales projections?

A. That is right.

Q. On the 401 machine?

A. That is right.

Q. When did you do that?

A. I can't remember, sir.

Q. Was it before the introduction of the 401 machine?

A. Oh, yes.

Q. So it was prior to June, 1957?

A. Yes.

Q. What information did you rely upon in arriving at sales projections of the Singer 401 machine?

A. Our past sales history, the estimated total market for sewing machines and what that total market would be.

Well, actually it was based on all of our general experience with household sewing machines.

Q. Including also, as I understand your testimony, the estimated total market of household sewing machines?

A. That is right.

Q. Did you arrive at a figure as to that estimated market?

A. Yes, I believe that we did, yes.

Q. What sewing machines were Singer selling at the [fol. 1771] time?

Mr. Klots: At what time, please?

Mr. Elkins: At the time of the market survey or the sales projection.

Q. It was selling a straight stitch machine, was it not?

A. Oh, we were selling a number of straight stitch machines, and I believe that at the time we were working on these forecasts we were also selling the 306 and the 206.

Q. The 306 is a replaceable cam machine; true?

A. A machine with a replaceable cam feature, yes.

[fol. 1772] Q. And the 206 is a manually operated zigzag machine; right?

A. A machine that has a built-in cam or actuating device for automatically swinging the needle bar, but no means of replacing the device which is built into the machine to produce a variety of ornamental stitches.

Q. And didn't the 206 produce some different stitching by the use of a manual device?

A. There were levers to be manipulated manually which would vary the fundamental zigzag pattern, yes.

Q. Were you able to arrive at estimated sales figures of the Singer 401 machine?

A. Yes, we did.

Q. And as to the first six months that it was on the market, were those figures accurate?

A. Yes, they were, quite accurate, from memory.

Q. Of the total sewing machine market, how were you able, sir, to estimate what part of that would go to the 401 machine, having in mind that at the same time you were selling a replaceable cam machine and a manually operated zigzag machine?

A. We base our estimates, as I have said, on past history, [fol. 1773] including the sales history on our top of the line machines.

Q. Did that past history that you referred to include the sales of the 319 machine?

A. From memory, the projection was made before we had that information.

Q. As I understand it, you say that no contact with potential consumers was made in relation to this analysis.

A. That is right.

Q. Did you conduct any survey of your retail outlets?

A. Not in a formalized way. As I think I have mentioned earlier, we are constantly in communication through normal channels.

Q. So that there was nothing special in relation to this sales analysis.

A. No, sir.

Q. Or sales forecast. At the time of this survey the Brother built-in cam machine was on the market, was it?

A. I don't know. I don't remember.

Q. Would it aid your recollection, sir, if you were to be told that it is agreed between the parties to this action that [fol. 1774] the Brother built-in cam machine arrived in the United States in September, 1954, as set forth in paragraph 22 of the agreed statement? Does that help your recollection at all?

A. Yes. I would say that we were making this study, analyzing these possibilities, in late '54 or early '55.

Q. Did this analysis take into consideration the fact that the 401 has a built-in or would have a built-in cam mechanism or built-in cams?

A. It took into consideration all of the features that would, in our opinion, make this brand new sewing machine attractive, including the built-in cams.

The Court: Did you reduce all of this checkup that you made to a written report?

Is there such a report in evidence?

Mr. Elkins: No, your Honor.

The Witness: To the best of my knowledge, it was never reduced into a formalized report. We had a great many discussions on it, naturally, so the factories could make their tooling and capacity plans, but I don't recall that it was ever reduced to a formalized kind of a report.

By Mr. Elkins:

[fol. 1775] Q. There were writings in relation to it, were there?

A. Yes, notes, but so much of our work of this kind is done in discussion groups by the staff.

Q. And at such times, are you saying that there would

be no one present to take notes, reduce the meeting to writing?

A. We do not have a secretary that takes notes and then puts out a summary afterwards, at many of these meetings, no.

Q. Were there any writings, memoranda, letters, intra-company letters from you to somebody else or vice versa in relation to the sales projection?

A. Not that I recall. I don't recall any.

Q. If there were or had been such writings, where would they now be located?

A. Well, they might be in one of a number of files that had to do with the testing of the 282, which was the experimental machine number for the 401. I would just have to start and hunt.

The Court: We don't want to begin a discovery proceeding at this stage of the trial, do we, Mr. Elkins?

Mr. Elkins: It wouldn't be at this stage of the trial.

[fol. 1776] The Court: I imagine, if these things were in existence, that the government would have found out about them long ago. You have had access to all of Singer's files.

. . . . . .

[fol. 1777] Q. Sir, are you saying now that there was no final report setting forth the results of your sales projection on the 401?

A. To the best of my knowledge there was never such a final written report—to the best of my recollection.

Q. And in the absence of such a final report how would you communicate to the various officials of Singer the results of your sales projection?

A. In discussions with the vice president of manufacturing, the vice president of research and development, and the president of the company.

Q. And you would transfer your intelligence to each of them orally, is that the idea?

A. Yes, or in a group meeting.

Q. Would you say, sir, that the sales of competitive replaceable cam machines in the United States would have the same effect as Singer sales of its 401 as to the sales of competitive built-in cam machines?

A. Would you—this is a comparative question.
Would you mind reading it again, please?

(Question read.)

A. That is such a broad question.

[fol. 1778] The Court: I do not really get the question myself.

Suppose you reframe it. Make it shorter questions and more to the point.

Q. Would you say that if built-in cams were excluded from the United States market, that that would not increase Singer sales of its 401, if imported removable cam machines were available?

Mr. Klots: I am sorry, I did not get the question, the last part.

(Question read.)

The Court: In other words, do you feel that there is a specific market for the built-in multi-cam zigzag household sewing machine which is not supplied by other machines on the market?

The Witness: No.

Q. In other words, even though Singer succeeded or should succeed—assume that it succeeded in excluding from the United States all built-in cam machines, that would make no difference to the sales of the Singer 401 if replaceable cam machines were available?

Mr. Klots: I object to that.

The Court: That does not follow. I mean——

[fol. 1779] Mr. Elkins: That is the question I want answered, your Honor. I do not know what question the Court has on its mind or what question Mr. Klots has on his mind, but that is the question I would like answered.

Mr. Klots: There is no evidence.

The Court: If a person wants to go out and get a navy blue serge suit, and cannot get a navy blue serge suit, will he buy some other shade of blue serge suit?

Mr. Elkins: I did not intend that to be my question.

The Court: That is about the size of it.

Mr. Klots: Moreover, there is no evidence that Singer

is attempting to exclude all built-in multi-cam machines; only infringing machines.

The Court: Yes, objection sustained the way the question is framed. It is argumentative. Let us get down to the real facts.

Q. Do you, Mr. Bruder, have to submit annual reports?

A. Yes: I submit an annual report to the president, summarizing the activities in our division for the past year.

[fol. 1780] Q. And you save copies of those reports, do you?

A. Yes, I do.

Q. What are they entitled?

A. I think it is simply entitled "Annual Report" of our division.

Q. Mr. Bruder, the Singer 401 machine has built-in cams, does ti not?

A. Yes, it does.

Q. And it can also take in addition to the built-in cams a replaceable cam; is that true?

A. Correct.

Q. When it is so used, that is, as a replaceable cam machine, it is identical, is it not, with the Singer 403 replaceable cam machine?

A. The results are identical when you are using it——

Q. The machine is in all regards identical with the Singer 403 machine?

A. No.

Q. That is the question.

A. No, the machine is not identical.

Q. All right. If the operator wanted to use a replaceable cam only and to change it when she wanted a change in the stitch—do you understand?

[fol. 1781] A. Yes.

Q. Wouldn't it then as so used have all of the features of the Singer 403 replaceable cam machine?

Mr. Kl. s: I object to that. I am not clear what he means by "Would it have all the features". Does he mean would the result be the same or what does he mean? I object to the question as not clear.

The Court: If it is not clear to the witness he may say so. Objection overruled.

A. It is like the last question, the machine would not be the same.

The Court: That is the answer.

Q. In what regard would it differ, then, from the Singer 403 machines, assuming, as I say, that the operator was not using the built-in cams of the 401 machine?

A. Well, this machine (indicating) would still have built-in cams.

Q. Yes.

A. And the dual dial means of selecting the cams?

Q. Yes.

A. We are talking about that portion of the machine only.

[fol. 1782] Q. All right. Now I am assuming that we have an operator that does not want to use that mechanism or is not using that mechanism as you have just described it but who instead is using the replaceable cam in the 401 machine, and that can be done, can it not?

A. Yes, you can put a replaceable cam in there and draw information from——

The Court: Mr. Elkins, your question—I do not like to say it but it isn't entirely fair. The fact that the operator wants to use only the replaceable cam does not affect the machine itself.

The Witness: That is what I am trying to say.

The Court: The machine itself is essentially different.

Mr. Elkins: Yes.

The Court: The 401 has the built-in cams and has other features——

Mr. Elkins: Yes.

The Court: —that are not possessed by the 403.

Mr. Elkins: Yes.

The Court: I do not think you intend—I know you do not intend to be unfair in framing these questions but the [fol. 1783] effect is not desirable.

Next question.

Mr. Elkins: I think it is. If your Honor please, I want to ask——

The Court: This is not proper cross-examination.

Mr. Elkins: I want to ask whether or not the Singer 401 machine could not be used if the operator so elected as a replaceable cam machine. I think it is pretty simple, your Honor.

The Court: I know but that is not what you have been asking up to this point.

Mr. Elkins: I ask it now, if you Honor please.

The Court: Go ahead, that is all right. That he can answer.

A. The machine can be used—the 401 machine can be used to take intelligence from one cam in a fashion similar to the way we do it on the 403.

Q. And when the operator wanted a change in the pattern, why the operator would put another replaceable cam in the 401 machine?

A. That is right. That is one way of doing it.

The Court: And if you had that same replaceable cam [fol. 1784] in the 403, the net product would be the same?

The Witness: Yes, sir.

The Court: There has never been any dispute about that?

Mr. Elkins: No, your Honor.

Q. Now you participated, Mr. Bruder, did you not, in the Singer license—in the negotiations relating to the Singer license to Sears Roebuck on Gegauf 1 and Gegauf 2 patents?

A. Yes, sir.

Q. At the time of that transaction Sears Roebuck was a customer of some subsidiary of Singer; is that so?

A. Yes.

Q. What was that subsidiary?

A. Diehl Manufacturing Company, the electrical division of the Singer Manufacturing Company.

Q. Is it true that Singer would not have licensed Sears Roebuck had it not been for that business relationship?

A. That is true.

Q. Now, sir, in your testimony, if I may direct your attention to page 1609 of the record (indicating), wherein you stated: "in the 404 the zigzag attachment which [fol. 1785] actuates the needle is the means of producing the zigzag stitch".

A. That should read "cloth" or "work". In the 404 the zigzag attachment which actuates the work or cloth, rather than the needle. If I said "needle" it was a slip of the tongue.

Q. Now you have amended it to make it correct, is that so?

A. Yes.

Q. These zigzag attachments to the machine work not the needle but the work material, is that it?

A. Right.

Q. Is such a mechanism that vibrates the work material less easier for the operator to use than a mechanism that vibrates the needle itself—less easier?

A. Here you run into an area of opinion.

Q. May we have your opinion, sir?

A. My personal preference, which I would find—which device I would personally find easier to use?

Q. Mr. Bruder, you have given quite a bit of testimony, I think, as to those devices which make operation of the machine easier. Having in mind the same context now that you had in mind when you gave that testimony, I would now like to ask you whether or not it is easier to use a [fol. 1786] zigzag machine in which the needle itself vibrates rather than to use a machine in which the work material is vibrating back and forth?

A. My own personal opinion and preference is that I would prefer the vibrating needle for doing zigzag work than a zigzag attachment.

Q. With the vibrating needle the work material goes through the machine straight, does it not?

A. Yes.

Q. And with the other system, that is, the attachment, the work material is going back and forth?

A. Correct.

Q. Now are you generally acquainted with machines of competitors, Mr. Bruder?

A. Generally, yes.

Q. Are you acquainted with the Borletti machine, which is Defendant's Exhibit 114?

(Mr. Weinstein hands exhibit to the witness.)

A. I have seen the machine but I wouldn't say that I was acquainted with it or just how it was built or operates.

Q. Do you know whether or not it has a plurality of built-in cams?

A. Well, may I refresh my recollection?

[fol. 1786a] Q. Yes.

A. (After examining) It appears to, but as I say, I am not familiar with the construction of the machine.

[fol. 1787] Q. We are talking about a plurality of cams, sir, rather than a replaceable cam machine.

The Court: He is not familiar with it.

What is Mr. Weinstein's construction? Has it a plurality of cams which are removable?

Mr. Weinstein: It has a single cam inside, your Honor. But, if you want to get anything in excess of one pattern, you have to use a replaceable cam.

Mr. Klots: May I hear what Mr. Weinstein said, your Honor?

The Court: He said it has a built-in cam but that if you want to get a variation of that built-in cam, there is a replaceable cam attachment; you can put in a replaceable cam.

That is what you said, was it not?

Mr. Weinstein: Yes, your Honor. It has two replaceable cams, one for feed control and one for needle control.

Mr. Klots: If your Honor please, this machine is described in the statement of facts, and I don't think Mr. Weinstein's description is entirely accurate.

The Court: Well, what paragraph describes it?

Mr. Klots: I think it is described in paragraph 96, page 50.

[fol. 1788] The Court: This is the Borletti New Home Model 1102.

Mr. Klots: I understand that is the exhibit.

The Court: It "incorporates therein a series of rotary cams mounted about a common axis and a single cam follower with the series of cams and the cam follower being relatively shiftable lengthwise of the common cam axis under spring pressure to a preselected position without withdrawing the cam follower radially of a cam surface."

Mr. Klots: You will note this says a series of rotary cams.

The Court: Yes.

Mr. Elkins: I was asking the witness if they were built-in cams and if he cannot testify as to it, as he indicates——

The Court: He says he is not familiar with the machine,

so why waste time? Not waste time with him but with the machine.

Mr. Elkins: May I have this machine here marked for identification.

The Court: Is this another machine that we have not seen yet?

Mr. Elkins: That's right, your Honor.

[fol. 1789] The Court: What is the name of this machine?

Mr. Elkins: That will be determined in just a moment, if your Honor please.

(Marked Plaintiff's Exhibit 204 for identification.)

The Court: Is it a mystery? I want a description. We are marking it for identification. What is it identified as?

Mr. Elkins: We would like to have the witness identify it, if your Honor please.

The Court: If he can identify it, show it to him.

Q. Could you, Mr. Bruder, identify this machine without a more careful examination than you can make from there?

A. No, I cannot.

Q. Do you know what machine it is?

A. No, I do not.

The Court: Referring to Government's Exhibit 204 for identification.

Q. This machine has a dial on the face of it, has it not?

A. Yes, sir.

Q. And around the dial the various stitches that may be [fol. 1790] obtained by using the dial?

A. I would assume so.

Q. Viewing the machine as you are viewing it, would you be able to determine whether it has one follower or a number of followers?

The Court: Wait a minute. At this point I am not going to go into this machine unless you want to have it in evidence.

Mr. Elkins: It will be in evidence, your Honor.

The Court: It will, if I let it in evidence. What is the description of this article at this point, since the witness cannot give it?

Do you know what make machine this is now?

The Witness: No, your Honor, I do not.

The Court: Have you ever seen it before, to your knowledge?

The Witness: I don't recall having seen it.

The Court: What is the description of this machine now? It is called on the front, "Magic Eye Automatic."

The Witness: That's what it says.

Q. Can you tell, sir, from looking at this machine whether or not it infringes Gegauf 1?

The Court: Please. Will you answer my question, Mr. [fol. 1791] Elkins? What is the name of this machine?

Mr. Elkins: Sanwa.

The Court: Is that a Japanese machine?

Mr. Elkins: It is, your Honor.

The Court: All right. Do you want to offer it in evidence?

Mr. Elkins: Yes, we will offer it in evidence, your Honor.

Mr. Klots: What is the purpose, may I ask?

Mr. Elkins: Well, if I ever am permitted to interrogate the witness——

The Court: Now, Mr. Elkins, I don't like a remark like that. That is discourteous, and I will expect your immediate apology.

Mr. Elkins: I am sorry. I was not referring to you, your Honor. I was referring to—

The Court: I don't like comments of that nature, especially from one of your experience. Don't do it again.

Mr. Elkins: I was addressing my remarks, if your Honor please, to opposing counsel, and the reason for putting it in is as a sample of a Japanese built-in cam machine with the dial on the face of it.

[fol. 1792] Mr. Klots: I think there were 685 that were imported at one time.

The Court: I don't know. Do you object to its admission in evidence?

Mr. Klots: I object to it.

The Court: Objection overruled. It is received in evidence.

(Plaintiff's Exhibit 204 for identification received in evidence.)

The Court: You don't dispute that it is a machine of Japanese manufacture?

Mr. Klots: No, sir.

Q. Sir, you are acquainted with the Gegauf 1 mechanism which is in this defendant's Exhibit 107 that you referred to earlier (indicating)?

A. Yes.

Q. Can you tell me from where you sit whether or not Government's Exhibit 204 has in it a Gegauf mechanism such as the Gegauf 1 mechanism which you have before you?

Mr. Klots: If he is competent. He has not been qualified as an engineer.

The Court: If he cannot tell us, Mr. Klots, he will so say.

A. I cannot.

[fols. 1793-1794] Mr. Elkins: I am very sorry, your Honor, that we could not explain the nature of the machine because it would interfere with the testimony of the witness. I assumed that the witness might know that a Sanwa machine violated Gegauf 2 and not Gegauf 1, and our only purpose——

The Court: Maybe that is so. We might get a concession on it.

Mr. Klots: It is in the stipulation, your Honor.

Mr. Elkins: We have.

The Court: It is in the stipulation? What paragraph?

Mr. Klots: It appears in Exhibit S-23, which is under paragraph 116. Here is a copy of the exhibit.

The Court: Is this machine that we have just taken in evidence, the Sanwa, one of the machines listed in S-23?

Mr. Klots: Yes. That is the machine, and you will see it is the only Japanese machine that violates Gegauf No. 2.

The Court: All right.

* * * * * * *

[fol. 1795] Mr. Klots: With regard to this last machine, may I point out the facts that appear in the stipulation:

None of the Sanwa machines, which is the only Japanese machine that violates Gegauf No. 2, violate No. 1, none

of them reported in 1957, none in 1958, and only 685 were imported in 1959. I just wanted to point that out.

Redirect examination.

By Mr. Klots:

Q. On your cross-examination you were asked about your testimony before the Tariff Commission, the Tariff Commission proceeding.

A. Yes, sir.

Q. I cannot remember exactly how Mr. Elkins worded the question, but you were asked, I believe, why you did not point out the fact that replaceable cam machines competed with the 401 or the Japanese machines that we claimed were infringing the 401.

Mr. Elkins: I object, your Honor. I believe this question [fol. 1796] is predicated upon some question that was never asked. I don't recall it.

The Court: Irrespective of that, he is now going to propound a question to him concerning the testimony that he gave before the Tariff Commission, so we will hear the next question, which is the important question, according to Mr. Klots.

Q. I would ask you whether any machines were involved in that Tariff Commission proceeding except built-in multi-cam machine devices which Singer claimed violated the Gegauf patent.

A. No other machines were involved in those proceedings other than machines with a built-in multi-cam device which violated Gegauf No. 1.

Q. Competition of 403 machines, or any other replaceable cam machines, was not involved in any way, was it?

A. No, sir.

• • • • • • •

[fol. 1797] STIPULATION AND COLLOQUY

Mr. Klots: Before we call a witness, your Honor, I would state that the government has now consented to sign the stipulation with regard to catalog advertisements of sewing machines, subject to a clause which Mr. Weinstein has

written out and which we will incorporate in the stipulation itself, and I would like to offer that in evidence now, subject only to the stipulation.

The Court: How will the stipulation read? Why not put it right on the record now?

Mr. Klots: It is stipulated and agreed that the matter set forth in the paragraph annexed hereto and made a part hereof and numbered 150 shall be added to and deemed a part of the statement of facts and subject to the provisions of the stipulation made with respect to such statement of facts dated February 23, 1961:

The plaintiff does not concede the truth of the statements set forth in the exhibits annexed to paragraph 150. The plaintiff does not concede that the collection of catalog pages incorporated in the stipulation, Item 150, in any way represents a complete or statistically significant survey or sampling.

That is the way the stipulation will read, and I offer the [fol. 1797a] exhibit in evidence pursuant to that stipulation.

The Court: The stipulation on the catalog advertisements.

(Received in evidence as Defendant's Exhibit 173.)

[fol. 1798] Mr. Klots: Mr. Newcomb.

George Lee Newcomb, called as a witness in behalf of the defendant, having been first duly sworn, testified as follows:

Direct examination.

By Mr. Klots:

Q. Where do you live, Mr. Newcomb? What is your home address?

A. 88 Edgewood Avenue, Larchmont, New York.

Q. Are you employed by the Singer Sewing Machine Company?

A. Yes, sir.

Q. In what capacity?

A. I am the advertising manager for the Singer Sewing Machine Company, United States and Canada.

Q. And in your capacity as advertising manager do you have any duty with regard to keeping track of advertising expenses?

A. Yes, I do, sir.

Q. Is it your duty to keep track of the advertising expense made by Singer on its various products?

A. Yes, sir.

Q. And as part of that duty is it your duty to allocate the expense incurred by Singer, the advertising expense among [fol. 1799] the different products and machines?

A. Yes, sir, it is.

Q. For what purposes are these allocations made?

A. These allocations are made to test the effectiveness and to judge the effectiveness of our advertising as it relates to various products in various time periods.

Q. I show you Defendant's Exhibit 163 which I think was admitted subject to further testimony—and your testimony is the "further testimony"—(handing witness), and I ask you if you prepared that exhibit?

A. No, sir, I only prepared that portion of the exhibit that relates to advertising.

Q. But you did prepare the figures on this exhibit that relate to advertising expense, is that right?

A. That is correct, sir.

Q. The sales figures you did not prepare?

A. No, sir.

Q. And from what records did you prepare these figures with relation to advertising?

A. These figures were prepared from the regular company records.

Q. Records which the company keeps; that you use in [fol. 1800] determining the effectiveness of advertising expense with respect to particular products?

A. Yes, sir. These are made from the regular company records with regard to all of our advertising.

Mr. Klots: I offer that now in evidence—I think it is in evidence.

The Court: It is in evidence.

Mr. Klots: Yes.

The Court: This is the record of the advertising expense on the 400 series, is it?

Mr. Klots: It covers not only the 400, sir, but it covers other machines which have appeared on some of these charts.

I have no further questions.

Mr. Elkins: No questions, your Honor.

The Court: Thank you.

(Witness excused.)

The Court: Next witness.

Lawrence M. Dunne, called as a witness in behalf of the defendant, having been first duly sworn, testified as follows:

[fol. 1801] Direct examination.

By Mr. Klots:

Q. Mr. Dunne, will you tell us where you reside?

A. 1316 Lakeshore Drive, Massapequa Park, Long Island.

Q. Are you employed by the Singer Sewing Machine Company?

A. Singer Manufacturing Company.

Q. Employed by the Singer Manufacturing Company?

A. Yes.

Q. And in what capacity?

A. I am a distribution analyst.

Q. What do you mean by that?

A. Well, it is our responsibility to forecast machine requirements of the various factories throughout the world.

Q. Throughout the world?

A. Yes.

Q. But not including the United States?

A. Not including the United States.

Q. And how long have you been in the employ of the Singer Machine Manufacturing Company?

A. Since November 1, 1960.

Q. And prior to that in whose employ were you?

A. The Necchi Sewing Machine Sales Corporation.

[fol. 1802] Q. That is, prior to November 1, 1960?

A. That is right.

Q. And how long prior to that date were you employed?

A. Since October, 1956.

Q. Had you ever been employed by the Singer Company before?

A. Yes, sir.

Q. When was that?

A. From, I believe it was, April 7, 1946, until January 20, 1956.

Q. And then did you leave to go to another job?

A. Yes, sir, I did.

Q. What job was that?

A. I left the employ of the Singer Company to go with the Rayco Auto Seat Company.

Q. And how long were you with that company?

A. A very short period of time, sir—three months.

Q. Then you went to Necchi?

A. Yes, sir, I did.

Q. What was your position with Necchi?

A. I was hired as supervisor of district managers.

Q. And how many dealers did Necchi have at that time [fol. 1803] throughout the United States?

A. Approximately 2,000, sir.

Q. Approximately 2,000?

A. Yes, sir.

Q. And were the district managers in charge of these various dealers—supervise them?

A. Yes, supervise them, yes, sir.

Q. Now I show you this paper here and ask you what it is (handing witness).

Did you ever see one like that before?

A. Yes, sir, I have.

Q. Have you seen an exact duplicate of it before?

A. Yes, sir, I have.

Q. Tell us what it is, if you know.

A. Well——

Q. Just a second—well, no, go ahead.

A. It is a comparison chart, sir.

Q. What was it used for?

A. It was used to compare the features of the Necchi

Supernova Ultra machine with that of the Singer 401 machine.

Q. Used by whom?

A. By the Necchi dealers throughout the country.

[fol. 1804] Mr. Klots: I offer it in evidence (handing to Mr. Elkins).

Mr. Elkins: No objection.

(Marked Defendant's Exhibit 175 in evidence.)

The Court: Is that a publication that was prepared by the Necchi Sewing Machine Company?

The Witness: Yes, sir.

The Court: Hadn't we previously marked it for identification? The number is on the back.

What is the number? It should be on there somewhere.

Mr. Klots: I am sorry.

The Court: Withdraw the other one. That paper has been previously marked.

The Clerk: Someone said Exhibit 167.

The Court: Exhibit 167 is now received in evidence. Mr. Klots has the one that was marked.

Mr. Klots: Yes. I see this has been marked 167 for identification.

The Court: 167 is now received in evidence.

(Marked Defendant's Exhibit 167 in evidence.)

(Previous Exhibit 175 withdrawn.)

Mr. Klots: And this was marked as part of it at the time it was marked for identification, and it shows how [fol. 1805] it came into the possession of Singer. Any objection to that (handing to Elkins)?

Mr. Elkins: No objection.

The Court: Clip them all together.

(Clipped together as part of Exhibit 167.)

By Mr. Klots:

Q. Now I show you this other document, Mr. Dunne, which is very much like the one we just offered in evidence but a little bit different. One of the differences is that

the Necchi machine is shown on the left-hand side and the Singer 401 machine is shown on the right-hand side, and there are some other textual differences.

I ask you what this document is (handing witness)?

A. This is the same thing that I previously identified as being a comparison chart of the two machines.

Q. Used for what purpose?

A. As a sales training aid, I would say.

Q. And was it distributed by Necchi to its dealers?

A. Yes, sir, it was.

Mr. Klots: I offer this copy in evidence—it is a little [fol. 1806] different.

Well, if it is in evidence, we corroborate the testimony.

The Clerk: It was previously marked 146-B.

The Court: All right, it is in evidence.

Mr. Klots: The record will show that the last paper that I had questioned the witness about is Exhibit 146-B in evidence.

I have no further questions.

Mr. Elkins: No questions, your Honor.

The Court: All right, thank you, sir.

(Witness excused.)

The Court: Next witness.

Mr. Klots: Dr. Cohen.

Jerome B. Cohen, called as a witness by the defendant, having been first duly sworn, testified as follows:

Direct examination.

By Mr. Klots:

Q. Where do you live, Dr. Cohen?

A. 135 East 74th Street, New York City.

Q. And what is your position?

A. I am professor of economics and assistant dean in [fol. 1807] charge of graduate studies at the Bernard M. Baruch School of Business of the College of the City of New York.

Q. And what is your title in that position?

A. Professor of economics and assistant dean.

Q. Can you tell us about your educational background before coming to the Baruch School of Business, your experience and education?

A. I received my Bachelor of Social Science degree from the College of the City of New York in 1934. I then went on to Columbia University and obtained a Master's degree in economics in 1935, and I obtained a PhD in economics at Columbia in 1947.

Q. And how long have you been teaching at the City University of New York?

A. I have been at City ever since 1934—27 years.

Q. What positions have you held in the faculty there?

A. Well, I have come up through the ranks from tutor to instructor to assistant professor, associate professor, full professor.

Q. Have you ever taught in any other institutions?

A. Yes. Occasionally I have been on leave in the summer and I have taught at the University of Puerto Rico, State [fol. 1808] College of Washington, Southern Methodist University, et cetera. Also I have been at the Merrill Center for Economics at Amherst University.

Q. And have you done work for other organizations besides educational work?

A. Yes. During the early part of World War II I was senior economist in the Office of Price Administration, before I went into the Navy, and I have been a consultant for the American Bankers Association and a number of other organizations.

Q. What about MIT? Have you ever had any connection with them?

A. Yes. I spent one summer at the Center of International Studies at MIT.

Q. By that I mean the Massachusetts Institute of Technology.

A. That is right.

Q. Have you done any writing in the field of economics?

A. Yes, I have written a number of books and some two dozen articles for various journals.

Q. Are you a member of any professional societies?

A. Yes, I am a member of the American Economic Society, the Royal Economic Society, the American Finance

[fol. 1809] Association, the National Tax Association, the Metropolitan Economic Association.

Q. Can you tell us some of the courses that you have taught in the course of your teaching?

A. For 27 years I have taught a good many principles of economics, including analysis and history of economics, in business organization and public policy, money and banking, public finance, corporation finance, money and capital market, et cetera.

Q. In the course of these studies and work as an economist, have you had occasion to study the factors affecting the nature of a market?

A. Yes. The analysis of markets, of the way in which the price mechanisms allocate resources in the market, the extent of competition in a market, the degree of monopolization versus competition in the market—these are central features of economics which one studies in great detail.

Q. In the course of your studies and work as an economist, have you had occasion to study the Japanese economy, the Japanese competition?

A. Yes, I have. In World War II I went into the Navy and became a Japanese interpreter in Naval Intelligence, and my interest in Japan stemmed from that.

[fol. 1810] I have written three books on Japan and a number of articles.

Q. What are the titles of the books you have written on Japan?

A. The first was "Japan's Economy in War and Reconstruction".

The second was Economic Problems of Free Japan, and the third and most recent was Japan's Post-War Economy.

Q. Dr. Cohen, I am going to ask you what is known in law as a hypothetical question.

I am going to ask you to assume, for the purposes of this question only, that the following facts of which there is evidence in the record are true.

Assume that the basic function of a sewing machine is to sew and that a woman purchases a sewing machine in order to sew. Sewing consists of fabricating and maintaining clothing and fabric furnishings for the home. All household sewing machines sew straight stitches. For a limited number of purposes the ability to make zigzag

stitch patterns is desirable. The testimony of experts with wide experience in the use and merchandising of sewing machines indicates that all household sewing ma-
[fol. 1811] chines are capable of sewing zigzag stitch patterns.

There are two types of zigzag stitch patterns, namely functional and ornamental. Functional zigzag stitch patterns are used to sew pieces of material together, to seam, to hem, and to make closures. Ornamental zigzag stitch patterns are one of many kinds of ornamentation used to decorate material. These kinds of ornamentation include buttons, lace, darts, cording, braid, applique, pleats, tucks, ruffling, and shirring. Functional zigzag stitching is useful in affixing such ornamentations to material.

It has been estimated that 90% of a woman's sewing consists of straight stitching. 10% of her sewing consists of zagzag stitching, 5% of which consists of functional zigzag stitching and 5% consists of ornamental zigzag stitching.

Sewing machines with a zigzag attachment may be used to produce various functional and ornamental zigzag stitch patterns which may be changed by the operator by the means provided on the particular attachment. An example of such a sewing machine is the Singer 404, which has a zigzag attachment as standard equipment. It produces zigzag stitch patterns which may be changed by placing a cam into the attachment, which cams may be made and
[fol. 1812] changed without limit.

Sewing machines with a manual device will produce continuous functional and ornamental zigzag stitch patterns upon the setting of controls for controlling stitch width and needle position, and will also produce other functional and ornamental stitch patterns by manual manipulation of such controls. An example of such a sewing machine is the Pfaff 259.

Sewing machines with a replaceable cam device will produce various functional and ornamental zigzag stitch patterns which may be changed by placing a cam or cams into or onto the machine, which cam or cams may be made and changed without limit. Examples of such sewing machines are the Kenmore Model 90, the Elna Plana

Supermatic, the Necchi Supernova Ultra, the Vigorelli Fantasy and the Singer 403.

Sewing machines with a machine-carried multiple-cam device will produce various functional and ornamental zigzag stitch patterns which may be changed by manual manipulation of a dial, handle, knob or lever located on the exterior of the machine. Examples of such sewing machines are the Singer 401 and the Consolidated Sewmor Model 770 (new design).

Sewing machines with a replaceable cam device, sewing [fol. 1813] machines with a manual device and sewing machines with a zigzag attachment are capable of producing zigzag stitch patterns similar to any zigzag stitch patterns that may be produced by a sewing machine with a machine-carried multiple-cam device. Some sewing machines with a replaceable cam device are equipped with features which permit such machines to produce zigzag stitch patterns which the Singer 401 is incapable of producing. One such feature is a cam controlled forward and reverse speed which is found in the Elna Plana Supermatic, the Kenmore 90, the Necchi Supernova Ultra and Vigorelli Fantasy; another such feature is a stitch elongator which is found in the Kenmore 90, the Necchi Supernova Ultra and the Vigorelli Fantasy; a third such feature is the cam controlled lateral feed which is found in the Vigorelli Fantasy.

Sewing machines with a zigzag attachment and sewing machines with replaceable cam and machine-carried multiple-cam devices are capable of producing with comparable effectiveness and reasonable facility substantially the same functional and ornamental zigzag stitch patterns. Sewing machines with a manual device can produce with comparable effectiveness and reasonable facility depending on the skill of the operator substantially the same functional [fol. 1814] and ornamental zigzag stitch pattern that can be produced by the sewing machines with a zigzag attachment and sewing machines with replaceable cam and machine-carried multiple-cam devices.

Sewing machines of different makes an models carry many different and varied features. Manufacturers and merchandisers of sewing machines seek to put before the public a package of pre-selected features for which they

believe the public has expressed a desire, or for which they believe a public desire can be created. Merchandisers select different features and different devices for the purpose of attracting customers and competing with each other.

A housewife is interested in a full concept of the sewing machine. A housewife is most interested in how easy a sewing machine is to use, how well it stitches on a wide range of fabrics and how well it feeds those fabrics without causing her any undue difficulty in handling; in its durability and whether it operates under many different circumstances without mechanical service or even too much care on her part. Ease of threading is extremely important in a sewing machine of any make or type because it must [fol. 1815] be threaded precisely as it was designed to be. If it is not, it will not stitch properly and sometimes it will not stitch at all. Speed control is extremely important for the job of detailing on a garment. A machine must start immediately upon contact with the controller. The speed build-up must be gradual and controllable. Vision is important because in many steps of dress construction, one stitch too far means unevenness either in the lapel of the garment or in the buttonhole or in a pocket. Light weight is highly desirable whether in a portable or in a cabinet sewing machine. Some housewives are interested in sewing machines that make a zigzag stitch effectively and with reasonable facility.

Sales appeal of a sewing machine depends primarily upon three factors; visual attractiveness and appearance, simplicity in mechanical structure and design and effectiveness of sewing operation. A substantial number of sewing machine features are common to straight stitch sewing machines and sewing machines with manual, replaceable cam and machine-carried multiple-cam devices. Some sewing machines emphasize or have features which are not emphasized or are not contained in other sewing machines. Merchandisers in selecting features to emphasize select [fol. 1816] those which will make their machines different from the sewing machines of other merchandisers so that their machines will compete with such other sewing machines. Such package of preselected features is advertised in various media and is emphasized by salesmen in attempting to convince a potential purchaser to purchase a sewing

machine. Singer merchandises its sewing machines in accordance with the principle that a sewing machine is a package of preselected features which must be consistent with production of excellent straight stitches. Singer instructs its salesmen to emphasize the particular package of features which the salesman believes will appeal most to the prospective customer with whom he is dealing at the time.

Singer, in considering the features to be incorporated in the 403 and 404 sewing machines, decided that the fundamental features of the 401, namely, the slant needle construction, the loop taking mechanism, the fixed bobbin case, the drop-in bobbin, gear motor drive, and a die cast aluminum head would be utilized in the construction of the 403 and 404 sewing machines. It was decided that the machine-carried multiple-cam device and the two dials on the exterior of such machine to actuate such cam device was [fol. 1817] not a fundamental root of the 401 machine. Such dials were considered to be a feature to be advertised and promoted as one of the selling points of the 401 machine.

Most manufacturers make straight stitch sewing machines which will take a zigzag attachment and sewing machines which, in addition, have other zigzag devices. Some manufacturers make sewing machines with multiple-cam devices, replaceable cam devices and manual devices. Some manufacturers make sewing machines with machine-carried multiple-cam devices and replaceable cam devices. Some manufacturers make sewing machines with replaceable cam devices and manual devices. Some manufacturers make sewing machines with machine-carried multiple-cam devices and manual devices.

Wholesale distributors distribute straight stitch sewing machines which will take a zigzag attachment and sewing machines with a variety of other devices for making zigzag patterns.

Most retailers offer straight stitch sewing machines which will take a zigzag attachment and sewing machines which, in addition, have other zigzag devices. Some retailers offer sewing machines having a machine-carried multiple-cam device, a replaceable cam device, a manual [fol. 1818] device and a zigzag attachment. Some promi-

nent retailers do not offer sewing machines with a machine-carried multiple-cam device. Retailers do not physically segregate for purposes of sale straight stitch sewing machines which will take a zigzag attachment from sewing machines which, in addition, have other zigzag devices. Retailers do not physically segregate for purposes of sale sewing machines with a manual device, replaceable cam device and machine-carried multiple-cam device from each other.

Sewing machines with zigzag attachment, manual device, replaceable cam device, and machine-carried multiple-cam device are advertised in the same media, namely, newspapers, women's magazines, consumer periodicals, trade journals, radio and television. Sewing machines with a zigzag attachment, a manual device, a replaceable cam device and a machine-carried multiple cam device are advertised in many instances on the same advertising mat.

Few, if any, potential customers prior to the salesman's demonstration know the difference between sewing machines with a manual device, a replaceable cam device and a machine-carried multiple-cam device or are familiar with all of the features of a manufacturer's sewing machine. [fol. 1819] Customers consider sewing in terms of the kinds of stitches which can be produced rather than in terms of the means by which stitches are produced. In general customers do not come in and ask to purchase a sewing machine with a particular feature, but express an interest in sewing, seek the advice of a retailer for a specific sewing problem or wish to purchase a used or new sewing machine. In Singer shops, the testimony of experts with wide experience in the use and merchandising of Singer sewing machines indicates that customers do not ask specifically for a sewing machine with a machine-carried multiple-cam device. Salesmen generally attempt to interest the customer in a specific sewing machine, the choice depending upon a number of factors. Salesmen lay emphasis upon a group of features. Some such features, such as easy access to the bobbin; dependable stitch tension; good visibility of the sewing area; easily adjustable presser foot to accommodate different weights of material; dependable feeding of the sewing material; automatic bobbin winder;

speed control; and light weight, are more important to a customer than are other features.

Most customers who express interest in sewing machines which can produce zigzag stitch patterns do not demand a [fol. 1820] sewing machine which can produce a great number of zigzag stitch patterns.

It has been testified that Singer has a reputation for reliability, quality and service. A customer's selection of a sewing machine depends upon numerous factors, including, among others, the reputation of the manufacturer or seller of the sewing machine, quality of sewing machine, price, availability of financing arrangements and type and term thereof, availability of service, availability of parts, furnishing of lessons or instructions as to the use of the sewing machine, sewing machine features and appurtenances and attachments accompanying or available for use with the sewing machine, type and effective time of guarantee, location and type of shop at which sewing machine is sold, and the customer's psychological approach as reflected in such things as a desire for a sewing machine of a particular quality, that is to say, minimum workable, average or best available, susceptability to persuasion by salesmanship, reaction to the country of origin of a sewing machine and responsiveness to various promotion and advertising techniques.

There is available to a prospective purchaser of a sewing [fol. 1821] machine a wide range of model choices and price choices which is evidenced by the seven price charts which I now hand you.

Mr. Klots: I am handing the witness, attached to the stipulation, paragraphs 141 et seq. (handing).

Q. (Continuing) If, for example, a prospective purchaser wants to buy—excuse me.

I also call your attention that in addition to those price charts, that the testimony shows that only recently a Necchi straight stitch or plain stitch machine, Supernova was priced at $136.95; at another place it was priced at $169.50, and at another place a Pfaff straight stitch machine which was regularly sold for $169.50, after making a $40 allowance, was offered at $129.50.

There is another Pfaff machine which was offered at $149.50.

At another place a Necchi Supernova straight stitch machine was offered for $229.

There is another machine which was sold under the Winthrop name, which apparently was made in Japan, a straight stitch machine, and the list price of which was $249, but it was finally offered at $189.

[fol. 1822]. Sears Roebuck in Hackensack offered a straight stitch model, No. 76, for $126.95 with Greist decorator attachment, which they also advertised through the catalog and sold.

Having in mind those charts and that testimony, I continue with these facts:

If, for example, a prospective purchaser wants to buy a sewing machine with a well known name and a reputation for top quality, reliability and service and is willing to pay accordingly he could buy a sewing machine with a machine-carried multiple-cam device or a replaceable cam device or a manual device or a zigzag attachment. If, on the other hand, he only wants to spend $100 or less on a sewing machine, he could equally well buy a sewing machine with a machine-carried multiple-cam device or a replaceable cam device or a manual device or a zigzag attachment.

Prices of sewing machines are a function of numerous factors, including, among others, the reputation of the manufacturer, quality of sewing machine, sewing machine features, appurtenances and attachments accompanying the sewing machine, availability of service, availability of parts, type and extent of financing arrangements made available, furnishing of lessons or instructions as to the use of the sewing machine, type and effective time of guarantee, cost of manufacture, cost of distribution, loca-[fol. 1823] tion and type of shop at which sewing machine is sold and promotion and advertising expenditures.

A substantial portion of sales of sewing machines is financed through the medium of conditional sales contracts by virtually all retailers of sewing machines which narrows the difference in monthly payments regardless of the prices of machines.

I now hand you a chart showing comparative sales of the Singer 401 and 319 sewing machines which both have

machine-carried multiple-cam devices in one column or bar, the Singer 403 and 306 sewing machines which both have replaceable cam devices in another bar, and the Singer 404 and 301 sewing machines for both of which a zigzag attachment is available, over the course of the years 1958 to 1960. I mean to say that chart shows the sales for those machines over those years.

[fol. 1824] This chart shows that sales of the three models of sewing machines each year have approached greater equality in percentage of total sales. In 1958 sales of Singer sewing machines with machine-carried multiple-cam devices constituted 57.6 per cent of total sales of the three sewing machines; in 1959 44.8 per cent of such sales and by 1960 41.4 per cent of such sales.

In the same three years the sales of the sewing machines with replaceable cam devices rose from 3.8 per cent of such sales in 1958 to 18.6 per cent in 1959 and 26.8 per cent in 1960. During the three-year period the absolute sales of the Singer sewing machines with machine-carried multiple-cam devices remained within a constant range of 152,000 to 156,000, whereas sales of the sewing machines with replaceable cam devices rose from 10,000 sewing machines in 1958 to 64,000 in 1959 and approximately 100,000 in 1960.

Singer Manufacturing Company presently manufactures straight stitch sewing machines which will take a zigzag attachment and sewing machines with replaceable cam and machine-carried multiple-cam devices in the United States and distributes them nationwide through a wholly-owned subsidiary, Singer Sewing Machine Company, which oper-
[fol. 1825] ates some 1,600 retail stores throughout the United States. The principal portion of Singer's sales in the United States are through such retail stores. In addition, leased outlets are operated by Singer in approximately 80 department stores located in key cities. All models of Singer household sewing machines are offered in each such retail store and outlet. It also sells at wholesale to approximately 270 independent retail stores. Singer also sells household sewing machines in virtually all foreign countries outside the Iron Curtain through its own and independent distributors who operate thousands of retail stores in such countries. Singer owns and operates plants

manufacturing sewing machines in some 14 foreign countries.

Directly after World War II household straight stitch sewing machines were manufactured in the United States by White Sewing Machine Corporation, Free Sewing Machine Company, Inc., the Bell Manufacturing Corporation, Burtman Electric Company, Gellman Manufacturing Company, Inc. and the New Process Gear Company as well as Singer. In the year 1948 importations of household sewing machines from Japan amounted to 3,000 sewing machines. In the year 1959 importations of household sewing machines from Japan amounted to 1,100,000. By 1959, with [fol. 1826] the exception of the New Process Gear Company, which manufactures sewing machines on specifications and orders from a single customer, Singer was and now is the sole manufacturer of household sewing machines in the United States.

White Sewing Machine Company which discontinued its manufacturing operations in 1957 in the United States, stated that both White and Sears, Roebuck and Company had been fighting a side by side but losing battle over the past five or six years in trying to sell White's lines of fine USA-made sewing machines in competition with foreign-built imports. When Sears left White's side to pursue the import route, it was obvious that White had no chance of supporting its sewing machine manufacturing facilities on a volume suddenly reduced nearly in half. In this situation, management decided to have its line of sewing machines built for it in Japan and Germany, and to dispose of its principal sewing machine manufacturing facilities. This decision was based upon the conviction that it offered the most logical and quickest route to profitable operations and increased sales in the sewing machine division.

The recent trend is that Japanese manufacturers are either setting up sales subsidiaries in the United States or [fol. 1827] are purchasing controlling interests in the former domestic manufacturers of sewing machines.

Singer survived for the following reasons: Singer stands for quality, reliability and service. Its wholly-owned outlets throughout the country provide consumers with services that no retailer of Japanese sewing machines can duplicate. The same thing is true with respect to guaran-

tees, after-purchase services, sewing courses and the general quality of the products sold by Singer.

By 1959 Japanese manufacturers and exporters operating as a cartel and their importers had obtained more than 60 per cent of the sewing machine market in the United States. The 1,246,898 Japanese exports approved by the Japanese Government in 1959 consisted of 567,389 straight stitch sewing machines, 264,271 sewing machines with replaceable cam and machine-carried multiple-cam devices, and 375,111 sewing machines with a manual device and 40,127 sewing machines with unknown zigzag devices, or more than 60 per cent of the sewing machine market in the United States in the year 1959. In addition to such Japanese sewing machines, thousands of competitive sewing machines were imported from Europe. While the Japanese Government does not distinguish in its figures [fol. 1828] between sewing machines with machine-carried multiple-cam and replaceable cam devices, the record shows that in 1957 Japanese-made sewing machines with a machine-carried multiple-cam device represented 13 per cent of imports of sewing machines with machine-carried multiple-cam, replaceable cam and manual devices from Japan and only slightly more than 3 per cent of all imports of household sewing machines from Japan. In the year 1958 the number of Japanese-made sewing machines with a machine-carried multiple-cam device imported into the United States amounted to approximately 12 per cent of sewing machines with machine-carried multiple-cam, replaceable cam and manual devices so imported and amounted to approximately 4 per cent of all imports of household sewing machines from Japan. In the year 1959 the number of Japanese-made sewing machines with a machine-carried multiple-cam device imported into the United States amounted to approximately 10 per cent of sewing machines with machine-carried multiple-cam, replaceable cam and manual devices so imported and approximately 4 per cent of all imports of household sewing machines from Japan.

I show you a summary of Japanese sewing machines imported into the United States. I think counsel has it, [fol. 1829] and we won't have to read it into the record.

The Japanese were free to manufacture and sell sewing

machines with machine-carried multiple-cam devices which did not infringe any Singer patents relating to such devices at all times and in 1959 these sewing machines amounted to almost one-third of all Japanese sewing machines with machine-carried multiple-cam devices imported into the United States, were of various non-infringing constructions and were produced by a considerable number of manufacturers.

I call your attention to the fact that I have handed you seven price charts, one chart representing actual prices paid by Singer for sewing machines with manual, replaceable cam and machine-carried multiple-cam devices and prices transmitted to Singer by plaintiff; three charts representing prices at which Japanese-made sewing machines with respectively, manual, replaceable cam and machine-carried multiple-cam devices are listed for sale and offered for sale by dealers in the United States; and three charts representing prices at which European-made sewing machines with respectively, manual, replaceable cam and machine-carried multiple-cam devices are listed for sale and offered for sale by dealers in the United States. And you have heard testimony with regard to the prices at [fol. 1830] which certain straight stitch machines were offered recently in this country, testified to this morning by a witness.

Now, on the basis of the facts which I have stated and the charts which I have handed to you and on the basis of your expert knowledge of economics, have you been able to form an opinion as to whether sewing machines with machine-carried multiple-cam devices, replaceable cam devices and manual devices for making zigzag stitches and straight stitch machines with zigzag attachments compete with each other in the same market?

A. Yes, I have.

Mr. Elkins: Objection, your Honor.

The Court: Objection overruled. I am going to take it. It is really the ultimate question that I may have to determine, but I will take it for such guidance as it may give me.

Mr. Elkins: May we point out, your Honor, that question contains as a hypothesis material on which there has been no testimony.

The Court: Well, I suppose that is so, but I am going to disregard some of it. This subject of hypothetical questions is something I can never understand and never accept, although I had to for many years as a prosecutor [fol. 1831] on questions of sanity. I could never see it. The objection is overruled. I am going to take it. But frankly, with due respect to the professor, I don't think I am going to give it very much weight, if any.

Mr. Klots: I understand that is your Honor's attitude but I think it will be very helpful to your Honor. We are not asking him to decide the case, obviously, but we do think the opinion of an economist who has studied the market, studied matters of competition is of some help in pointing out some of the——

The Court: Well, some judges have called in patent experts to sit with them and others have called in economists in the relevant market. I don't exactly approve of it. I am going to take it so that it can be in the record.

Mr. Klots: And I also wanted to deny on the record that we have put into this question any facts that are not in evidence.

The Court: I suppose there may be, but not deliberately done.

Mr. Klots: Certainly not deliberate, nor do I think there are some.

The Court: All right. Objection overruled. I will take it. And you have an exception.

[fol. 1832] And your answer, Professor, is what?

The Witness: Yes.

The Court: In the affirmative. Had it been "No," you would have surprised Mr. Klots.

Mr. Klots: Your Honor, I am told that there is one item here, one of those percentages we got from the United States Department of Commerce. This is a certified copy which we received from the U. S. Department of Commerce, Bureau of the Census, showing the United States imports of sewing machines for consumption in the calendar years 1948 through 1959.

The Court: Well, Mr. Elkins, what do you say? Any objection?

Mr. Elkins: If your Honor please, this chart, upon examination of this set of figures, contains figures for industrial

sewing machines which are grouped together with household sewing machines. Consequently, it is obviously quite beyond the scope of any issue that is presented here. It shows figures for 1948 right down through and including 1959 and specifically states that included within each particular figure are imports of industrial type sewing machines and that they are reported or combined with the household sewing machines as one total.

[fol. 1833] The Court: They are not separately stated?

Mr. Elkins: No, your Honor.

Mr. Klots: The fact is, your Honor, that the number of industrial sewing machines, as Mr. Fairman stated, is a very small proportion, and we have a certified copy of the 1960 census report which shows exactly what percentage were industrial.

In 1959, which I am offering now, it does not show the exact number.

The Court: Well, we will take it in evidence, bearing in mind that it has the combined total of industrial and household sewing machines.

Objection overruled.

(Received in evidence as Defendant's Exhibit 174.)

Q. Dr. Cohen, I think your answer was that you are able to give an opinion as to whether these different types of machines compete with each other in a single market. What is your opinion?

A. Yes, I believe they do compete with each other in a single market.

Q. Will you please give your reasons for your answer.

A. I think it is unrealistic, for the purpose of defining a [fol. 1834] market, to classify a sewing machine by the type of mechanism or the type of control that is used to make a zigzag stitch. From an economist's point of view in studying markets, I feel the more meaningful approach would be to look at the sewing machine as a whole from the standpoint of its function and use. It is obvious that there are a number of designs of machines that will sew and that will sew zigzag stitches.

It would seem to me to be an unreasonable approach to fix on one type of mechanism or control out of several by

which the same result may be accomplished and to say that that mechanism or that control is the determining factor in deciding whether the machines are or are not in the same market. Products which are reasonably adaptable to the same uses may be referred to as functionally interchangeable because it is the product with all its uses which is or is not in competition.

The decision as to the functional interchangeability should be made with reference to all the functions of the product rather than to some sub-use or sub-mechanical feature.

I think the hypothetical question shows that there are numerous features which go into the choice that a customer makes of a sewing machine other than the mechanism [fol. 1835] by which the zigzag stitch is made. For instance, the slant needle feature or the convenience of replacing the bobbin may perhaps be of more concern than whether the change in the zigzag pattern is accomplished by the turning of a dial or by the replacing of a cam.

Q. You referred to competing in the same market. How do you define the term "market" in that sense?

A. Well, of course, it is very difficult to define a market. There are certain tests that I would apply: Do the products compete for the same buyer's favor? Are the products available in the same product market to the buyer? Do the products have reasonably similar uses? Are the products reasonably interchangeable and acceptable for the same purpose?

If products compete for the buyer's favor, if they are available to the buyer in the same product market, if they have reasonably similar uses, if they are reasonably interchangeable and acceptable for the same purpose, an economist, I would think, would say they are in the same market.

Thus we might define a market by saying that it is the area or the institutional framework within which buyer meets seller or buyers meet sellers of reasonably similar [fol. 1836] products, having reasonably similar uses, reasonably interchangeable and acceptable for the same purpose to satisfy their demand.

Q. Have you found any authorities to support this conception of market?

A. Yes, I have.

Q. Will you give us some of those.

A. In a book by G. E. Hale and R. D. Hale entitled "Market Power, Size and Shape Under the Sherman Act," the authors declare, and I quote:——

Q. And were both of those authors lawyers or is one an economist?

A. One is an economist.

"Economic theory is equally devastating in its analysis of the legal principles applied in most of the definitions of commodity cases referred to above. The raw materials used and methods of manufacture utilized in the making of a product bear no logical relationship to the question of substitutability. A buyer is interested in what the product will do for him; he does not care—except in terms of performance—whether his sound recorder utilizes a wire or a tape, whether his hosiery be made of silk or nylon. Still less relevant [fol. 1837] is the notion that price in terms of dollars alone controls substitutability. One who desires a needle for his phonograph may be offered a sapphire product at $5 or a diamond needle at $15. If the diamond wears four times as long, the fact that the price ratio is three-to-one should not prevent the product from being defined as the same commodity for purposes of determining the existence of monopoly. Much competition takes place at varying or uniform prices and is reflected in quality, service and other factors.

"Again, it is erroneous to apply pure engineering principles to determine whether one product can actually be substituted for another. An engineer might determine that an aluminum frying pan was substitutable for one made of stainless steel. Such a test would be considerably better than one based purely upon the distinction between raw materials utilized in the manufacture of the products. It would, however, ignore the fact that consumers often make decisions upon grounds which others regard as irrational. Thus to apply pure [fol. 1838] engineering principles to the problem constitutes a rejection of the basic doctrine of consumer sovereignty."

In another book, "Antitrust and Perspective" by a Columbia professor, in a discussion of the relevant market, it is said:

"First, primary importance is assigned to end use. In the words of the Court: "in determining the market under the Sherman Act, it is the use or uses to which the commodity is put that control.

"Second, where articles have the same end use and are thus interchangeable, it is not necessary that they be equal in their functional performance. On the contrary, they may differ in appearance, quality, taste and efficiency. The requirement is not one of complete but rather of reasonable interchangeability. The Court refuses either an infinite or a rigidly narrow "range" in the consideration of alternative products. The issue is whether in fact there is reasonable interchangeability of end use.

"Third, the court negates the necessity for any physical identity or fungibility among the products making up the relevant market.

"Fourth, there may be interproduct competition despite [fol. 1839] substantial differences in price.

"In sum, to the extent that there is reasonable interchangeability in the market place, there is that degree of competition which warrants the inclusion of all competing articles within the market."

In a report of the Attorney General's National Committee to Study the Antitrust Laws, on which a number of distinguished economists were represented, it was said, and I quote:

"Whether monopoly power for purposes of Section 2 exists"——

The Court: Mr. Klots, I want to be very patient with this professor, coming, as he does, from a school that I am very much personally indebted to, but I think we are getting a little far afield now.

Mr. Klots: Well, we won't ask him to cite any more authorities, but I have one or two further questions I would like to ask him.

The Court: All right.

Q. What would you have to say, Dr. Cohen, as to the relation of varying prices to the concept of market?

A. Varying prices within a single market are widely found in American industry. Ladies' handbags, for example, range in price from $2.50 to $50. At least, in walking [fol. 1840] through Macy's, I noticed this.

With respect to this case, however, the fact that sewing machines with machine-carried multi-cam mechanisms, the replaceable cam mechanism, the manual mechanism, and with the zigzag attachment mechanism compete with each other and are interchangeable marketwise is shown, among other things, by the fact that they are not to be found in separate price categories from each other. The price chart shows that within the relative price preference range the housewife may shop, she has equally available to her competing models of sewing machines with machine-carried multi-cam mechanisms, replaceable cam mechanisms, manual mechanisms and zigzag attachment mechanisms.

If, for example, she wants a machine of top quality, reliability and available service, she has a choice of a sewing machine with built-in cams such as the Singer 401 machine or a sewing machine with replaceable cams such as the Necchi Supernova, or the manually operated Pfaff machine, or the Singer 404 straight stitch machine with its zigzag attachment as standard equipment.

If, on the other hand, she wants to spend less than $100 on a sewing machine, she still has a choice of a sewing machine with a built-in multiple-cam mechanism or a re- [fol. 1841] placeable cam mechanism or a manual mechanism or a zigzag attachment mechanism.

Thus, even if you classify sewing machines on the improbable basis of the mechanism by which the zigzag stitch is made, price considerations do not negate my feeling that all these machines compete in a single market.

Q. Dr. Cohen, have you had prepared a chart showing the different types of Japanese sewing machines imported into the United States from the facts stated in the hypothetical question and which are taken from the stipulation of facts?

A. Yes, sir, I have.

Q. May we produce such chart.

Mr. Klots: This, your Honor, I think is of very important significance. I offer it in evidence.

The Court: Where are the figures obtained from that are reflected in this chart?

Mr. Klots: They are obtained from the stipulation of facts, sir.

The Court: Do you represent this as being a graphic presentation of the facts as stipulated?

Mr. Klots: That's right.

The Court: You have no objection, subject to checking into it, have you?

[fol. 1842] Mr. Elkins: No, your Honor.

The Court: All right. Received in evidence.

(Received in evidence as Defendant's Exhibit 175.)

The Court: If you find anything wrong in this, call it to Mr. Klots' attention and he will correct it.

Mr. Klots: I would like to give you a nice little copy to have before you, your Honor.

Q. Will you explain, Dr. Cohen, in your own words just what that chart shows.

A. As I see it, in the year 1957 there were approximately nine-hundred-plus thousand Japanese sewing machines imported into the United States, of which machines straight stitch constituted about or close to 700,000, manual about 100,000, replaceable cam approximately another 100,000, and machine-carried multiple-cams the smallest segment of the category, this top green bar.

Mr. Klots: Your Honor might perhaps see it better on the big chart.

The Court: I can see it now. I don't have any difficulty in interpreting this.

Q. Go ahead, Dr. Cohen, and tell us a little bit more about it.

A. In 1958 the comparable figures, the only change is [fol. 1843-1845] that this small red bar indicates the so-called non-infringing machines, as I understand it, and then for 1959 you get the picture of this over one million ma-

chines imported from Japan, of which machine-carried multi-cams were a very small segment, some of which apparently were infringing and some of which were non-infringing.

Mr. Klots: That is the significance, your Honor.

• • • • • • • •

[fols. 1846-1853] New York, June 19, 1961.

• • • • • • • •

[fol. 1854] Francis Y. Sogi, called as a witness on behalf of defendant, having first been duly sworn, testified as follows:

Direct examination.

By Mr. Wesely:

Q. Mr. Sogi, where do you reside?

A. 1 Payne Road, Elmsford, New York.

Q. Are you a practicing attorney?

A. Yes, I am. I am a partner in the firm of Hill, Betts, Yamaoka, Freehill & Longcope, with offices at 26 Broadway; Washington, D. C.; Tokyo, Japan; and Paris, [fol. 1855] France.

Q. How long have you been associated with that firm?

A. Since 1952.

Q. Please state the universities and colleges you have attended, the years you have attended them, and the degrees you have received.

A. I attended the University of Hawaii from 1941 to 1943 when I left for service with the Military Intelligence Service Language School as a student and as an instructor and later as an officer of the Counter Intelligence Corps in Japan. In 1947, after leaving the service, I returned to the University of Hawaii, graduating in 1949 with a degree of Bachelor of Arts. From 1949 to 1952 I attended the

Fordham University Law School, graduating with a Bachelor of Laws degree. I also attended the Chuo University Law School in Tokyo where I audited courses between 1953 and 1954. I audited courses concerning Japanese law on contracts, negotiable instruments and admiralty.

[fol. 1856] Q. Are you licensed to practice in the State of New York?

A. Yes, I am. I was admitted on December 1, 1952.

Q. Are you a member of the Bar of any other court in the United States?

A. Yes. I was admitted to practice before the United States Supreme Court in December 1956.

Q. Are you licensed to practice law in Japan?

A. Yes, I am. I was admitted in August 1953 under a special provision of the Japanese Lawyers Law.

Q. Have you practiced law in Japan?

A. Yes, I did, for two and one-half years from 1953 to 1955.

Q. What was the general scope of your practice in Japan?

A. My work consisted in advising my firm's clients concerning commercial, patent and admiralty matters. I also appeared in Japanese courts representing these clients.

Q. Have you practiced law in the United States?

A. Yes. Prior to going to Japan to our Tokyo office and since my return in 1955.

Q. What has been the general scope of your practice in the United States?

[fol. 1857] A. My work has been general counsel work, advising clients concerning commercial matters, admiralty and corporate matters.

I have also appeared in the New York State and Federal Courts in behalf of these clients.

Q. Are you a member of any Bar association?

A. Yes, I am a member of the American Bar Association, the Association of the Bar of the City of New York, and the First Tokyo Bar Association.

Q. Have you previously testified as an expert on Japanese law?

A. Yes, I did once before, in the case of Metall Bodio

A.G. against Miles Metal Corporation. That was a case in the Supreme Court, New York County.

Q. What is your acquaintanceship with the Japanese language?

A. I read, speak and write Japanese fluently.

Q. Mr. Sogi, at my request have you made an investigation into the law of Japan with respect to the export of household sewing machines from Japan to the United States?

A. Yes, I have.

Q. What has been the scope of your investigation?

A. I have checked the statutes, cabinet orders, ordinances, [fol. 1858] directives and regulations, each of which has the force of law.

Q. Does the law of Japan provide for the control of the export of household sewing machines from Japan to the United States?

A. Yes.

Mr. Elkins: I object, your Honor. We object on the ground that it is irrelevant.

The Court: Overruled.

Q. I will repeat my question, Mr. Sogi. Does the law of Japan provide for the control of the export of household sewing machines from Japan to the United States?

A. Yes.

Q. What types of control does the law of Japan provide with respect to the export of such machines from Japan to the United States?

A. The law provides control as to the quantity, quality, price, the kind and term of payment of commodities exported from Japan, and also the law provides in certain cases an export will be prohibited if the export transaction is not in accord with the controls set forth by the law.

Q. What are the Japanese laws which provide for the [fol. 1859] fixing of quantity and price of household sewing machines exported from Japan to the United States?

A. There is the Export and Import Trade Law. There is the Medium and Small Enterprise Organization Law. There is the Directive—Directive No. 79, which was issued by the Minister of International Trade and Industry, and Regulations promulgated by the Exporters Association.

Q. What does the Export and Import Trade Law provide with respect to fixing quantity and price?

A. Article 5 of the Export and Import Trade Law provides that exporters may enter into agreements on price, quantity, quality or any other matter concerning export trade of specific commodities for export to specific destinations upon filing of such agreement ten days prior to putting such agreement into effect.

Article 11 of the same law provides that exporters may form associations and agree upon price, quantity, quality or any other matter pertaining to the export of specific commodities to specific destinations, provided that such association file with the Minister of International Trade and Industry the agreement or control exercised over its member ten days prior to putting them into effect.

[fol. 1860] Q. Does the Minister of International Trade and Industry have any power with respect to the filings which are made with him?

A. Yes, he does.

Q. What power does he have?

A. He has the power to amend or prevent any agreement from being put into effect.

Mr. Wesely: May I have the Japanese text and English translation of the Export and Import Law marked for identification.

The Court: You do not have to put the Japanese text into evidence because I cannot read it.

Do you have a recognized publication here?

The Witness: Yes, sir.

The Court: In English?

The Witness: Yes, sir.

The Court: Do you want to have it marked? You may refer to that. You can mark it for identification.

(Marked Defenadnt's Exhibit 176 for identification.)

* * * * * * *

[fol. 1861] By Mr. Wesely:

Q. Mr. Sogi, is Defendant's Exhibit 176 for identification an accurate translation of the Japanese text of the Export and Import Trade Law?

[fol. 1862] A. Yes, it is. With respect to the Articles that I testified to, namely, Articles 5 and 11, I have checked the translation personally with the Japanese text, and the translation is accurate and correct.

Mr. Wesely: I offer it in evidence.

The Court: I will take that portion which he says is a translation in evidence.

The Government has an exception.

(Defendant's Exhibit 176 for identification received in evidence.)

• • • • • • •

[fol. 1863] Q. Mr. Sogi, does the Medium and Small Enterprise Organization Law relate in any way, directly or indirectly, to the export of household sewing machines from Japan to the United States?

A. Yes, sir, it does. Article 9 of the Medium and Small Enterprises Organization Law provides that medium and small enterprises in Japan may form an association when competition among them has gone beyond the normal degree, and such competition has affected or has injured the smooth operation of transactions by such enterprises, and also when a substantial portion of the management of such enterprises has become or threatens to become unstable.

Article 17 of the same law provides that these associations may impose restrictions among its members or among their members concerning the kinds of and amount of production, shipment and handling of goods, production facilities, the amount or method of purchase of raw materials for such commodities.

The law also provides in certain cases where the situation explained in Article 9 cannot be overcome the Association may enter into or fix prices.

• • • • • • •

[fol. 1864] Q. Mr. Sogi, are the specific articles of the Medium and Small Enterprise Organization Law about which you have testified an accurate translation as they appear in Defendant's Exhibit 177 for identification—an accurate translation of the Japanese text of those articles?

A. Yes, I have checked those translations and have found them to be accurate and correct.

Mr. Wesely: I offer Defendant's Exhibit 177 in evidence.

• • • • • • •

[fol. 1865] The Court: Is that recognized by those learned in this field of law as being a classic acceptance of publication?

The Witness: Yes, for American attorneys practicing in Japan this publication is relied upon as the translation with which they would deal with in their daily work.

The Court: And accepted as such?

The Witness: Yes, sir.

The Court: Objection overruled. I will receive it.

(Defendant's Exhibit 177 for identification received in evidence.)

• • • • • • •

[fol. 1866] The Court: Exhibit 176 I have taken into evidence upon his testimony that certain portions of it contain an accurate translation of the Japanese laws and regulations. That has been received in evidence, with an exception to the government, but I do not want to have the whole book in evidence.

I understood that you are going to photostat such portions as are relevant to the matter before us, according to your contention.

Mr. Wesely: Yes, I will, your Honor.

The Court: All right, and you are going to give a copy to Mr. Elkins and a copy to me?

Mr. Wesely: Yes, your Honor.

Mr. Elkins: And as to only part of it being in evidence, your Honor, we will in due time, when it is available, go [fol. 1867] over it to determine whether there is any occasion for other parts going in—having in mind that Article 5, which is in, might be modified, say, by Article 21. I don't know.

Q. Mr. Sogi——

The Court: Again I want to repeat I regard this as possibly a very important point in this case, you see, be-

cause of the very narrow nature of the government's charge here in that it is charged that the defendant and others conspired to impose restraints upon the importation of one particular type of machine imported from one particular country. It may be very important—at least it is a very novel situation where so narrow a charge concerns the operation of a national industry, which is subject to what may well be cartel regulations.

Mr. Elkins: No, we do not so view it, your Honor, as we have said before.

The Court: So view what? As a new or novel point?

Mr. Elkins: This material. No, we do not believe that it is relevant, as we have stated before.

The Court: I just do not get your position.

Is it the government's contention that you do not dis- [fol. 1868] pute that the Japanese machines were exported under a cartel arrangement which controlled the quantities and apportioned quantities and prices?

Mr. Elkins: We would not call it a cartel, your Honor—any kind of unlawful combination.

The Court: Well, it wasn't unlawful under the laws of Japan. It would be unlawful if we applied the principles of American antitrust law, if there was an attempt, unlawful per se, as you so frequently used the term—an attempt to control territories, allocate customers, apportion business amongst manufacturing concerns.

All right. I regard this as a very important part of my decision on the problem that I am confronted with.

I cannot recall any case, as I have said before, where the charge of the government is so narrow and so limited.

Mr. Wesely: Your Honor, we are still looking for such a case, and have not found it.

The Court: All right.

Mr. Elkins: For what it is worth, I cannot imagine any case being brought in relation to the conspiracy than a conspiracy that involves an entire nation for a period of [fols. 1869-1870] seventeen years—that being the life of a patent. I cannot imagine anything more broad. And, your Honor, there has been frequent discussion during——

The Court: I am glad you have a very limited imagination; you become very prosaic.

* * * * * * *

Q. Mr. Sogi, have Japanese exporters of household sewing machines formed the sort of association contemplated by the Export and Import Trade Law?

A. Yes, sir, they have.

Q. What is the name of that association?

A. The Japan Sewing Machine Exporters Association.

Q. Has that Association promulgated regulations respecting quantity and price of household sewing machines exported from Japan to the United States?

A. Yes, sir, they have.

Q. Have such regulations been approved by the Minister of International Trade and Industry?

A. Yes.

• • • • • • •

[fol. 1871] (Received in evidence as Defendant's Exhibit 178.)

• • • • • • •

Q. Mr. Sogi, what do these regulations, Defendant's Exhibit 178 in evidence, provide with respect to the fixing of quantity of household sewing machines exported from Japan to the United States?

A. The regulations provide the total export quantity of household sewing machines that may be exported to the United States, Puerto Rico and Canada.

It also provides the allocation of the total quantity determined by the Minister of International Trade and In-[fol. 1872] dustry.

It further provides the assignment of the quantity established.

It provides that the Association's confirmation must be first obtained by the exporter to the effect that none of the regulations provided in these regulations are being violated before the application for an export license is made to the Minister of International Trade and Industry, pursuant to the Export Trade Control Order.

There are provisions with respect to penalties that may be imposed upon members who violate the terms of the regulations.

There are also provisions pertaining to policing compliance by members of the regulations.

Q. Mr. Sogi, do the regulations provide for the allocation of total quantity to specific manufacturers?

A. You mean exporters.

Q. Exporters. I am sorry.

A. Yes.

Q. Do they provide for assignment among exporters?

A. Yes.

Q. What do the regulations of the Japanese Sewing Machine Exporters Association provide as to the price of household sewing machines exported from Japan to the [fols. 1873-1874] United States?

A. There are regulations pertaining to the minimum price under which an exporter may not export household sewing machines for all countries in the world.

There are provisions pertaining to prohibition against entering into a contract for the export of household sewing machines for less than the minimum price established in the regulations.

The regulations also provide that the Association's confirmation must first be obtained, to the effect that the price at which the household sewing machine is being exported is not less than the minimum price set forth, and also to the effect that the provisions of these regulations are not being violated before an exporter makes an application for an export license to the Minister of International Trade and Industry.

There are also provisions concerning penalties that may be imposed upon a member who violates the provisions.

• • • • • • •

[fol. 1875] (Received in evidence as Defendant's Exhibit 179.)

By Mr. Wesely:

Q. Have Japanese manufacturers of household sewing machines formed the sort of association contemplated by the Medium and Small Enterprise Organization Law?

A. Yes, they have.

Q. What is the name of that association?

A. The Federation of Japan Sewing Machine Export Promotion Association which I understand is also known as the Japan Sewing Machine Manufacturers Association.

[fol. 1876] Q. Has the Minister of International Trade and Industry promulgated regulations respecting the quantity and price of household sewing machines exported from Japan to the United States?

A. Yes.

Q. Please identify those regulations.

A. This is called an adjustment regulation pertaining to household sewing machines for export. The regulations were promulgated as Ministerial Directive No. 79 issued by the Minister of International Trade and Industry, and the date of this directive is August 1, 1959.

• • • • • • •

Q. What do the Regulations, Ministerial Directive No. 79, provide as to the quantity of household sewing machines for export?

A. It provides the basic quantity for the association, the total adjustment quantity, the allocation of adjustment quantity to the members of the association, the carryover [fol. 1877] of adjustment quantity, the transfer or assignment of adjustment quantity, the return and reallocation of the adjustment quantity.

Q. Are there provisions in Ministerial Directive No. 79 respecting incentive allocations and special allocations?

A. Yes. Where a manufacturer produces machinery, household sewing machines, for export in complete form, or when 50 per cent or more of the adjustment quantity for the two immediately preceding periods has been exported to the United States on a continuous basis, there is an incentive quota assigned to the manufacturer. A special quota is allocated to the manufacturer who produces household sewing machines of a special design.

Q. Is there a provision for a special allocation for machines of unique design in these regulations?

A. Yes.

Q. Mr. Sogi, is the adjustment quantity the same as the working quota? Is working quota a fair translation of adjustment quantity?

A. Yes.

Q. What do the regulations contained in Ministerial Directive No. 79 of the Ministry of International Trade

and Industry provide as to the price of household sewing [fols. 1878-1879] machines?

A. The regulation provides that a manufacturer may not sell machinery for export—this is household sewing machines for export—at less than a stipulated minimum price.

Q. What agency is responsible for the administration of these regulations?

A. The administration of these regulations has been delegated to the Japan Sewing Machine Manufacturers Association.

• • • • • • •

[fols. 1880-1881] (Received in evidence as Defendant's Exhibit 180.)

• • • • • • •

[fol. 1882] By Mr. Wesely:

Q. Mr. Sogi, what are the Japanese laws which provide for fixing minimum quality control with respect to household sewing machines exported from Japan to the United States?

A. There are the Light Machinery Export Promotion Law, the Export Inspection Law and Cabinet orders and directives issued by the Minister of International Trade and Industry.

Q. What does the Export Inspection Law provide as to fixing minimum quality controls?

The Court: I don't see that this would be material, Mr. Wesely. It doesn't seem to be part of a cartel.

Mr. Wesely: Except, your Honor, that characteristically the fixing of minimum quality controls is one way of excluding certain kinds of machines.

The Court: Well, all right, I will take it and see what this law is, but offhand it would seem to me that this would not be part of a cartel arrangement. Maintenance of price, limitation on quantity of exports to the United States, the quantity of the exporter, that all might be part of a cartel arrangement, but the establishment of laws [fol. 1883] that, for instance, would require proper label-

ing is similar to our Wool Labeling Act here and would not be part of a cartel or part of an enforcement of a cartel.

Q. Mr. Sogi, does the government in Japan prescribe detailed standards to be applied in the methods of inspecting household sewing machines for export?

A. Yes. They have the standards set forth in the Export Inspection Law and Ministerial Directive No. 40 which was amended by Ministerial Directive No. 9 dated March 1, 1960.

Q. Generally what are the standards or types of standards covered?

. . . . . .

A. The ministerial directive provides standards as to the physical appearance of the household sewing machine, the electrical equipment, the internal parts and other matters pertaining to the operation of the household sewing machine.

[fol. 1884] Q. Do the two ministerial directives, No. 40 and No. 9 about which you have testified, apply to the inspection of household sewing machines and parts?

A. Yes.

Q. Is that by provision of Cabinet order?

A. The ministerial directive specifically refers to the household sewing machine, both the zigzag stitch and the regular stitch.

Q. What is the scope of the power of the Minister of International Trade and Industry under the Export Inspection Law?

A. The Minister of International Trade and Industry may prohibit the exportation of household sewing machines which do not conform to the standards established under the law, the Export Inspection Law.

Q. Is that in a particular article?

A. That is Article 2, and Article 3 of the Export Inspection Law provides the manner of inspecting and the requirement that upon inspection the household sewing machine must bear a label certifying that inspection has been made in accordance with the law. Article 4 of the Export Inspection Law provides for the inspection of ma-

terials used for the household sewing machines and in the manufacture of such machines.

• • • • • • •

[fol. 1885] Mr. Wesely: I offer those articles of the Export Inspection Law in evidence, your Honor.

Mr. Elkins: I object to that.

The Court: Overruled. I will receive it in evidence. I really don't know whether it is going to be relevant or not. Although I could take judicial notice of foreign law, I don't know whether these regulations are equivalent to foreign law.

What is the legal significance of what you have referred to as regulations?

The Witness: As I stated earlier, your Honor, these have the force and effect of law. These are promulgated based upon the law, and a minister may, by Cabinet order, [fol. 1886] ordinance or regulations——

The Court: Adopt a regulation?

The Witness: Yes, sir. That particular document is the law itself (indicating).

(Received in evidence as Defendant's Exhibit 181.)

• • • • • • •

(Received in evidence as Defendant's Exhibit 182.)

• • • • • • •

[fol. 1887] By Mr. Wesely:

Q. What does the Light Machinery Export Promotion Law provide as to fixing minimum quality controls?

A. This law provides that a manufacturer of light machinery or light machinery parts, which would include household machines and their parts, must register with the Minister of International Trade and Industry in order to produce machinery for export. Also, in order to be able to export household sewing machines, the sewing machines must bear a special mark on the light machine parts.

Q. Does the Light Machinery Export Promotion Law apply to household sewing machines?

A. Yes, it does.

. . . . . .

[fols. 1888-1889] (Received in evidence as Defendant's Exhibit 183.)

The Court: I may, under the rules, take judicial notice of foreign as well as domestic law.

. . . . . .

[fol. 1890] Cross-examination.

By Mr. Elkins:

Q. I believe you referred to certain regulations that were promulgated in relation to associations under the approval [fol. 1891] of MITI.

A. Yes. There are two sets of regulations promulgated by the Japan Sewing Machine Exporters Association with the sanction of the Minister of International Trade and Industry.

Q. And you are referring to Defendant's Exhibits 178 and 179?

A. Yes, sir.

Q. Both of those relate solely to exports?

A. Yes, sir.

Q. Is it true, sir, that it is not necessary for a person who wishes to export to belong to any one of the associations that you have mentioned in order to export?

A. Under the law there is no legal requirement that an exporter must belong to an association. Under the law, membership in associations is voluntary.

Q. So an exporter, as I understand it, need not belong to an association. It is voluntary as to whether an exporter belongs to an association or not.

A. Under the law, it is not necessary.

The Court: I see, as you gave that answer, you accentuated the words "under the law."

The Witness: Yes, sir.

[fol. 1892] The Court: Was there any special reason for that? What did you have in mind?

Mr. Elkins: Your Honor, if I may say so, this witness is

testifying as an expert on the law, and I hope not to get into local gossip of Tokyo.

The Court: Neither do I, but I want to find out just what he meant by that, and then I will determine whether or not it is local gossip. If it is local gossip, we will strike it from the record. If it is more than local gossip, we won't.

A. As a practical matter, as I understand from my experience over there, not particularly in this sewing machine industry but in other industries, membership in associations is essential to be able to obtain the export quota on a continuous basis.

The Court: Just what do you mean by "essential"? Is it required that you belong to this association in order to get a quota on a continuous basis?

The Witness: Yes, sir. Those who are not members of an association must apply to the Minister of International Trade and Industry on specific transactions with the importers of the foreign country. In other words, he will not be able to commit himself to an importer here, for example, in the United States unless he has a quota on [fol. 1893] hand as he will not know whether, upon application, the Minister of International Trade and Industry will grant him the export privilege.

The Court: And the members of the association are granted these quotas in advance, are they?

The Witness: Yes, sir. The association is granted by MITI, or the Minister of International Trade and Industry, a maximum quantity, a quota for the association.

The Court: So that, if you are not a member of the association, you are not required by law to be a member in order to get an export license, but you have to make an application for an export license directly to the Minister for each particular export transaction.

The Witness: That is my understanding, sir.

The Court: All right. Thank you. Apparently that is not gossip.

Mr. Elkins: Pardon me, your Honor?

The Court: Apparently my interrogation did not elicit merely gossip.

By Mr. Elkins:

Q. Does this Defendant's Exhibit 178, which are regulations, have a date as to when they were written, sir?

A. I am sorry?

[fol. 1893a] Q. Do the regulations which are included in Defendant's Exhibit 178 bear a date of their promulgation?

A. There is no date of promulgation, but it contains the effective date of the regulations.

[fol. 1894] Q. What is the effective date?

A. The effective period is from February 1, 1961 to December 31, 1961.

Q. In regard to Defendant's Exhibit 179, to which you have previously referred, will you give us the effective dates of that regulation, sir?

A. The effective dates are from February 1, 1961 to December 31, 1961.

* * * * * * *

[fol. 1895] CHARLES A. WINTER, called as a witness by the defendant, being first duly sworn, testified as follows:

The Court: Mr. Klots, inquiry has been made as to whether Mr. Winter is a newcomer or a substitute or what.

Mr. Klots: I think Mr. Benbow will explain; it is just to prove an exhibit that I think we have already offered.

The Court: Oh, just on one exhibit.

[fol. 1896] Mr. Klots: Yes, just on one exhibit; that's all.

The Court: All right.

Mr. Benbow: It will be very short.

Direct examination.

By Mr. Benbow:

Q. What is your address, Mr. Winter?

A. 3159 Hull Avenue, New York 67.

Q. By whom are you employed, Mr. Winter?

A. The Singer Manufacturing Company, 149 Broadway, New York.

Q. And what is your position?

A. I am the manager of the Invoice Department of The Singer Manufacturing Company.

Q. Is one of your duties as manager of the Invoice Department to process invoices for sewing machines, parts and needles imported from abroad by Singer into the United States?

A. Yes.

Q. In the course of your duties do you keep track of household sewing machines imported into the United States by Singer?

A. Yes.

Q. Have you had prepared a tabulation, which I now hand you (handing) and does that tabulation show imports of household sewing machines valued over $10 by Singer [fol. 1897] into the United States for the years 1947 to 1959 inclusive?

A. Yes, sir.

Q. Where, Mr. Winter, did you get the figures which you used in the preparation of this tabulation?

A. These figures are taken from records maintained by the Singer Manufacturing Company, 149 Broadway, in its usual, daily business routine.

Q. And was it the duty of Singer employees to keep those records in the regular course of Singer's business?

A. Yes.

Mr. Benbow: I would like to offer it in evidence.

Mr. Elkins: We object, your Honor. The original records should be made available.

The Court: It would be quite cumbersome. You may examine this witness, and if you want to go down and inspect the original records you may do it. It would entail a truckload of papers into this court. There is no need for it. You may have access for the examination of these invoices if you want to.

Do you want to make arrangements now to do it?

Mr. Benbow: Your Honor, I believe we have available in court some examples of the cards and business records [fol. 1898] from which these records were compiled.

The Court: The objection is overruled.

(Received in evidence as Defendant's Exhibit 184.)

The Court: If Mr. Elkins wants to examine these cards, you may show them to him.

Mr. Benbow: I have no further questions, your Honor.

The Court: This is a machine number—not the dollar volume?

The Witness: Yes, that is the quantity.

The Court: The quantity.

The Witness: Yes.

Cross-examination.

By Mr. Elkins:

Q. Does Singer import a machine which has a value of $11?

A. Only exactly $11 or $11 or more?

Q. Eleven dollars or less, sir.

A. Yes, they did in the earlier years; not now.

Q. And was that between $10 and $11 in value?

A. It was less than $10.

Q. Will you describe that machine for us, please?

A. I am not able to describe that. I am an accountant [fol. 1899] and I am not familiar with the construction of a machine.

The Court: You picked up this $10 item.

Mr. Elkins: I want to explore it.

The Court: I would like to ask you why did you make this list entitled Machines Valued at $10 or Over $10, rather? What prompted you to do that as an accountant?

The Witness: That was the instructions that were given to me by the attorneys, and that is what I compiled.

The Court: The lawyers said, "We want a list"——

The Witness: Of machines over $10 and not less than $10 and that is what I furnished.

The Court: Did you find while you were searching for that any machines under $10?

The Witness: There were in the earlier years.

The Court: Earlier years than 1947?

The Witness: Yes.

The Court: What were those—toy machines?

The Witness: No, they were some of the regular sewing machines that were imported without a motor, and in those days costs were lower and they were below $10 at that time.

Q. You say "in those days." Could you tell us——
[fol. 1900] A. In the earlier years—1948 or 1949.

Q. That was not the type of any sewing machine that we see here (indicating)?

A. I am not qualified to answer that question at all.

Q. All right. Do you recall the descriptive nomenclature of the machine, Singer's nomenclature?

A. No.

Q. Did it have a number?

A. It had a number, yes—99K31. That is as much as I can describe it.

Q. In doing this work, sir, how did you define "value" as you use it there in the heading?

A. That was the value that was taken from our supplier's invoice.

Q. And who was the supplier in this case?

A. The Singer Manufacturing Company, Ltd., Scotland.

Q. That was the declared value for purposes of import into the United States, is that it?

A. That's correct, yes.

Mr. Elkins: There are no further questions, your Honor.

The Court: Any redirect?

Mr. Benbow: No redirect, your Honor.

[fol. 1901] The Court: All right. Thank you.

(Witness excused)

The Court: Next witness.

COLLOQUY BETWEEN COURT AND COUNSEL

Mr. Benbow: Your Honor, we have a few exhibits which I think I can still put in in the limited time remaining, if you will permit.

The first is a tabulation showing—a schedule prepared by the Bureau of the Census of the United States Government, Department of Commerce, of imports for the years 1947 to 1959.

I offer it simply as a substitute for Defendant's Exhibit 174, which was a similar compilation prepared for the years 1948 to 1959, the only difference being that it adds the additional year 1947, and we wish to do that in order to show a more complete picture.

Mr. Elkins: We object, your Honor. This exhibit as offered by the defendant includes industrial type sewing machines, and further than that it is explained on the chart that the data which is reflected there does not reflect revisions made after publication.

Mr. Benbow: Your Honor, the number of industrial sewing machines which are involved in this chart is small, as was pointed out by Mr. Klots the other day, and I have available here a tabulation, again compiled by the same [fol. 1902] Bureau of the Census, covering the year 1960 as well as preceding years, from 1948 onward, which makes clear the percentage or what number of industrial type sewing machines were imported into the United States during the year 1960, and which show clearly that the number of such machines was limited.

I would like to offer that also in connection with this exhibit in order to meet Mr. Elkins' objection.

Mr. Elkins: We submit that this does not meet the objection, your Honor. If they wish to offer it as to 1960, that is something else again.

The Court: First let us rule upon this exhibit that I have here, which is apparently the figures of the United States Department of Commerce, Bureau of the Census, United States imports of sewing machines during the calendar years 1947 through 1959, showing particularly the quantity, the dollar volume and country of origin. The government objects, and the objection is overruled, and the government has an exception.

(Received in evidence as Defendant's Exhibit 185.)

Mr. Benbow: Your Honor, I would still like to offer for purposes of clarification only——

The Court: I am not taking it for clarification. I do [fol. 1903] not know that anything which is in evidence needs clarification. If you want to offer it, offer it.

Mr. Benbow: I would like to offer it because it does carry the tabulation down through 1960.

The Court: It is the same as was admitted but carries it for another year?

Mr. Benbow: Except, your Honor, it does not include 1947 but it does include 1960, which the other did not.

The Court: All right. Show it to Mr. Elkins.

(Document handed to Mr. Elkins.)

The Court: In other words, it has one more year at the end and one less at the beginning.

Mr. Benbow: That's correct.

The Court: All right.

Mr. Elkins: If your Honor please, our objection as to this is the same as our objection to the previous exhibit. It contains figures including industrial machines, and it also states in the note that the data does not reflect revisions made after publication.

The Court: I make the same ruling: objection overruled. We will receive it in evidence, and we will give your objections weight when considering this exhibit. Exception to the government.

[fol. 1904] (Received in evidence as Defendant's Exhibit 186.)

Mr. Benbow: Your Honor, I would now like to offer in evidence the 1954 Census of Manufacturers prepared officially by the United States Government, Bureau of the Census, Department of Commerce, to show the total domestic production of household sewing machines for the years 1947 and 1954, both of which are shown in this.

The Court: In the United States?

Mr. Benbow: In the United States, your Honor.

The Court: Haven't we got that all stipulated by stipulation of facts? Didn't we go into all that?

Mr. Benbow: No, we have not, your Honor. These are new figures which are not now presently in evidence. We have certain figures as to the Singer Manufacturing Company and its production. This shows overall production in the United States for the years 1947 and 1954 of household sewing machines.

The Court: I thought we had already stipulated that Singer is the sole surviving domestic manufacturer of household sewing machines——

Mr. Benbow: That is stipulated.

The Court: —that is left in the United States.

[fol. 1905] Mr. Benbow: That is stipulated, your Honor.

The Court: Do you want to make it any more pressing than that?

Mr. Benbow: We would like to show what the picture was during the years preceding the time when Singer became the sole domestic manufacturer.

The Court: Well, it is a sad story now. All right.

Mr. Benbow: I offer it in evidence.

Mr. Elkins: We object, your Honor. Apparently it relates to only the years 1947 and 1954, both of which antedate anything that is relevant in the matter now before the Court.

Mr. Benbow: Your Honor, we intend to use these as part of the chart. The reason that we are only presenting the years 1947 and 1954 is that these are the only years in which these figures are available when the Bureau of the Census collected them.

We, however, will offer in evidence as a part of this chart, projections taken from these two years and which were available and which will show the approximate figures for the intervening years.

The Court: May I see that.

(Document handed to the Court.)

[fol. 1906] The Court: I will take it in evidence. A couple of more figures won't hurt. What relevance it is going to have I do not know.

Mr. Elkins: May we ask your Honor what part —

The Court: Just that part of 3583 that reads "Sewing machine parts and attachments." That is all we are concerned with here.

Isn't that all you offer it for?

Mr. Elkins: We also object on the ground of hearsay, your Honor. This is not certified at all.

The Court: Apparently it is taken from a government publication. It might have some official certification in there somewhere.

This was taken from Bulletin MC-35, issued in connection with the 1954 Census of Manufacturers by the United States Department of Commerce, Bureau of the Census, under the seal of the Department of Commerce of the

United States Government in the front. It is an official government publication.

I am going to take it in evidence.

(Received in evidence as Defendant's Exhibit 187.)

The Court: If you find it is inaccurate without the certification, you call it to my attention.

[fol. 1907] Mr. Benbow: Your Honor, in order to add one final year to this series, we have available from the Department of Commerce, Bureau of the Census, a certificate showing the total production of household sewing machines for 1958, which we would like to offer in evidence.

When this letter or certification from the Department of Commerce is compared with Defendant's Exhibit 172, which shows the production and sale of Singer sewing machines over the years 1947 to 1959, it will be seen that the figures for total production in the United States for the year 1958 is exactly that shown on the certification which we have received from the Department of Commerce, and we believe this goes to show that in fact the only production of household sewing machines in the United States was by Singer.

[fol. 1908] We would like to establish that fact, and I therefore offer this certification into evidence (handing to Mr. Elkins).

Mr. Elkins: No objection, your Honor.

The Court: Received in evidence.

(Marked Defendant's Exhibit 188 in evidence.)

Mr. Benbow: I have one final exhibit to offer, your Honor, and that is in the reading of the hypothetical question last Monday, you will recall that Mr. Klots made reference to a chart which was shown to the witness as part of the hypothetical question, at transcript pages 1828 and 1829, and the chart relates to the number of Japanese imports into the United States during the years 1957 to 1959.

I would now like to offer it in evidence (handing to Mr. Elkins).

The testimony is in evidence, and this is the chart that was referred to.

I further call your attention to the fact, your Honor,

that all of the statistics shown here are stipulated to as part of the stipulation of facts, and this is a compilation of those statistics.

Mr. Elkins: We object, your Honor, and if it is predi-
[fol. 1909] cated—it is predicated apparently on the stipulation of facts but we cannot find the facts in the facts agreed upon, upon which this is based.

I am offhand acquainted with paragraph 11 which states that in the year 1959 importations of household sewing machines from Japan amounted to 1,100,000 units, and this chart shows a figure of 1,246,898.

The Court: Supposing during recess you point out to Mr. Elkins the particular portion of the stipulated facts or undisputed facts that you say are represented on this compilation.

Mr. Benbow: I will be happy to, your Honor.

The Court: And let him check it up.

* * * * * * *

[fol. 1910] Mr. Elkins: Your Honor, I think it would be advisable to mention now that in relation to the subject matter just discussed, namely, the chart offered by the defendant showing importations of Japanese machines, the defendant put in evidence Defendant's Exhibit 175—and that, too, was subject to checking, and the source as stated on the chart is stipulation of facts, so we cannot find the facts within the agreed statement on which this could be predicated.

So if in addition to discussing the chart just offered we can discuss with the defendant the sources of the information——

[fols. 1911-1912] The Court: Yes.

Mr. Elkins: —of Exhibit 175.

Mr. Benbow: We will be glad to point this out, Mr. Elkins.

* * * * * * *

[fols. 1913-1920] New York, June 20, 1961, 11.00 o'clock a.m.

* * * * * * *

[fol. 1921] Mr. Elkins: If your Honor please, may we have copies of all of the product training material sent out to the personnel, regardless of whether it is sent by the education department.

The Court: That is going to be too much. Now let us stop. That is going to be too much. There might be a lot of material sent out by a public relations department to wear blue serge suits and black ties; that the girls should dress sedately with dresses three inches below the knee and high necks and long sleeves. That is a lot of nonsense.

Mr. Elkins: I agree, your Honor. What we are asking for, to quote the witness, is "a great deal of product training material".

The Court: If there is any product training manual which was prepared by Singer—and by "manual" it does not have to be in one complete book—if it is in a series of books or pamphlets or such as you produced here from Necchi, that is what he wants to see. If you have any covering these 400 machines which detail its features, of its comparison with the other machines, I think you should [fol. 1922] have access to them. It may have a very important bearing upon the issue of relevant market and whether or not there are substitutes still available amongst the Japanese importations.

Mr. Pettit: We will be very glad to have him look at it.

The Court: You are going to get that this afternoon.

Mr. Elkins: Thank you.

The Court: If there is anything there, you may look at it.

Now is there anything else that you have in mind, Mr. Elkins, before we get down to the evidence?

Mr. Elkins: Can't we have this material at our office, your Honor——

The Court: Oh, now, stop, please. I think it is now—let me say this on the record, I find that the defendant has been most cooperative with the Court in the produc-

tion of its records from the very time we began our pretrial hearings, and at that time it was also quite apparent that long prior to the filing of this suit the defendant made all of its records which had any possible bearing upon this case available to the government.

[fol. 1923] Now there comes a time when you can accommodate the defendant, at least not to the extent of compelling them to bring up a lot of records and disrupt their organization.

If you want to look at these records they are right down there at, I think it is 145 it used to be—in the old Singer Building——

Mr. Pettit: 149.

The Court: —149 Broadway, and Mr. Klots and Mr. Pettit will take you down in a taxicab and see that you are brought back—although I personally feel a nice walk in the open air of those ten blocks might do you a lot of good!

(Laughter.)

In fact it would do me good if I could take it.

Mr. Elkins: If your Honor please, the instrument——

The Court: We have been getting—and when I say "we" I mean the government and the Court have been getting complete cooperation from the defendant with regard to its records. I find no fault and no complaint. All I had to do is make a suggestion and the papers I suggested be produced were produced.

Mr. Elkins: If your Honor please, we see no great dis-[fol. 1924] tinction between product training material that emanates from some department——

The Court: All right, go down there this afternoon——

Mr. Elkins: —of Singer, other than the educational department.

The Court: —and I am sure you will have everything made available for your inspection that bears even remotely upon this matter.

Mr. Elkins: In regard to paragraph——

The Court: There has been absolutely no disposition on the part of the defendant to conceal or withhold anything that is relevant.

* * * * * * *

[fol. 1925] Mr. Benbow: Your Honor, you will recall yesterday at the end of the session Mr. Elkins asked to see the material which supported Defendant's Exhibit 189 for identification, which was the chart of the Japanese machines, which was included—the tabulation of those figures which was included in the hypothetical question.

I met with Mr. Weinstein yesterday to show him that material, and it developed that although the government had stipulated with us to the effect that all of the zigzag machines as shown on those charts—on that chart are accurate figures, and that they are figures of machines imported into the United States, and the basis for that stipulation was the fact that those figures are reflected on the so-called MITI charts which are in evidence, which were appended, first of all, to the stipulation of fact as [fol. 1926] Exhibits S-31 through S-33—one each for the years 1957 to 1959—and those charts were subsequently received in evidence as a part of the material that went in with the stipulation of facts, the government now says that it is unwilling to accept those charts as being the back-up for the additional imports into the United States relating to zigzag type, unknown, and straight stitch machines as shown on Defendant's Exhibit 189 for identification, into evidence.

Therefore, although we feel that Defendant's Exhibit 189 for identification is fully supported by the material which is in evidence and based on the previous stipulations which have taken place, it would be completely reasonable to accept these figures—one set of figures, at least, the Japanese figures of imports into the United States—we are willing to submit, and I do now offer in place of Defendant's Exhibit 189 for identification a chart which characterizes those machines as Japanese approved exports rather than Japanese imports into the United States; because, as I understand it, this is the only objection which the government has, the plaintiff has to the figures as shown [fol. 1927] by those charts, was that difference in characterization.

So I will give you a copy (handing to government counsel), and I would like to offer it in evidence in place of Exhibit 189 for identification.

The Court: Do I read this chart correctly when I read

that only 3 to 4, or 4.6 per cent of all the Japanese machines which have been approved for export are the machine-carried multiple-cam machines?

Mr. Benbow: Based on the MITI charts which are in evidence as Exhibits S-31 through S-33.

The Court: For instance, in 1959, out of almost one and one-quarter million, less than 60,000 of the machines approved for export by the Japanese were of this multi-cam machine?

Mr. Benbow: The less than 60,000 figure was stipulated to, your Honor, between the government and ourselves.

The Court: All right. It becomes more amazing as I listen to the evidence.

Any objection? Received in evidence.

Mr. Elkins: If your Honor please, I think you have asked me whether there are any objections, and I was just about to ask for a moment, please.

[fol. 1928] The Court: Sir?

Mr. Elkins: This chart is based, it seems, on an agreed stipulation, and I am reading the stipulation, your Honor, if you will just give me a moment.

The Court: Yes. I thought Mr. Weinstein had gone over this and approved this.

Mr. Weinstein: We had not seen this before this morning, your Honor. It was just handed to us.

The Court: All right.

(Government counsel examine.)

[fol. 1929] Mr. Elkins: If your Honor please, these statistics are being massacred unholily, and this chart here just does not represent any facts upon which the parties have agreed. It mixes oranges and apples and whatnot. In the first place——

The Court: That sometimes makes a very palatable fruit cocktail.

Mr. Elkins: For that purpose it may have some use, your Honor.

The Court: You claim that this is a compilation of figures that are set forth in the stipulated facts, paragraph what?

Mr. Benbow: 130, your Honor, and in Exhibit S-25 in evidence.

The Court: All right. The Court will receive it in evidence as being the defendant's interpretation of the stipulated facts set forth in those paragraphs and as being a graphic representation of what has been stipulated. If the Court, on examination——

Mr. Elkins: May I explain what the defendant has done here?

The Court: Wait a minute. I am going to give you an opportunity to do so in a moment.

If the Court, on examination, finds that it does not con- [fols. 1930-1936] form to the stipulated facts, the Court will disregard it.

Mark it in evidence as a document submitted to the Court as illustrative, and only as illustrative, of the stipulated facts as set forth in the stipulation of facts.

Now, Mr. Elkins, for the Court's information, you may help me out by pointing out in what respect you claim that this chart, which is submitted to the Court and received solely to help the Court and assist the Court, does not conform to the facts as have been stipulated.

(Received in evidence as Defendant's Exhibit 190.)

* * * * * * *

[fol. 1937]. Mr. Elkins: Your Honor, I believe defense counsel will concede that this figure, say on Exhibit 190, of 57,732 for the multiple-cam machines in 1959 approved for export from Japan is too low, and that actually the figure as to those that were approved for export is much higher.

The Court: How much higher?

Mr. Elkins: I don't recall offhand, your Honor, but we started in our negotiations——

The Court: How much higher does your investigation [fols. 1938-1939] lead you to believe it was?

Mr. Elkins: It would be at least 10,000 higher, your Honor.

The Court: Ten thousand higher, and that's all?

Mr. Elkins: As we recall. We have seen this exhibit here——

The Court: Ten thousand would be less than one per cent of the total Japanese machines imported.

Mr. Pettit: Your Honor, in order to have this both ways, I would like to offer in the chart that we originally offered,

and then have both of them in. This one is entitled "Imports."

The Court: All right, Defendant's Exhibit 189 for identification is now offered in evidence as a chart to assist the Court in interpreting and reading the stipulated facts and it is contended by the defendant to be illustrative of these facts which have been stipulated. Is that so?

Mr. Pettit: That's correct, your Honor.

The Court: I will receive it for that purpose. If I find that it does not conform with the stipulated facts, I will disregard it.

* * * * * * *

[fol. 1940] JEROME B. COHEN resumed.

Direct examination continued.

By Mr. Klots:

Q. Dr. Cohen, let me first ask you this. The hypothetical question which you answered had contained in it Exhibit 189 which has just been received in evidence.

Now I would like to show you Exhibit 190 which has also been received in evidence and ask you if your Honor to the hypothetical question would be different whether it was Exhibit 190 or Exhibit 189.

A. No, sir, it would not.

Q. Dr. Cohen, the last time you were on the stand, you defined your concept of a market. I think it appears at page 1825 of the record. Now I would like to ask you, the concept of market that you had then defined, expressed, how would that apply as to sewing machines?

A. Well, since it is the use or the uses to which the product is put that governs, and since sewing machines are pur-[fol. 1941] chased to sew or, if your will, to sew zigzag stitches, and since sewing machines with machine-carried multi-cam mechanisms, with replaceable cam mechanisms, manual mechanisms and zigzag attachment mechanisms all do this with reasonable effectiveness and facility, then I conclude that they are in the same market.

Applying the tests I mentioned earlier: do these sewing machines all compete for the buyer's favor? Yes, they do. Are the products available in the same product market to the buyer? Various type machines are displayed side by side at the same stores. They are often advertised on the same mat.

Do the products have reasonably similar uses? They all sew. They all sew zigzag stitches.

What could be a more reasonably similar use? Are the products reasonably interchangeable and acceptable for the same purpose? From the facts in your hypothetical question, it would appear that these machines are reasonably interchangeable and acceptable for the same purposes. They are therefore, in my estimation, in the same market.

Q. Have you made any study, Doctor, of the nature and extent of Japanese trade with the United States?

[fol. 1942] A. Yes, I have.

Q. Will you explain what studies you have made.

A. Well, it has been a continuing matter over time. In my last book, Japan's Postwar Economy, I have a chapter, Chapter VIII, called Japan and the United States, which is a study of Japanese-U.S. trade relations. And then in several other instances I have also studied this. For example, two weeks ago I was co-chairman of an American Management Association seminar for businessmen on how to do business in and with Japan, and there, among other things, we discussed Japanese-American trade relations.

Q. In the light of the concept of the market which you have stated previously, would you say in this concept of market that Japanese and European imports compete effectively with Singer sewing machines?

A. Yes, they do. Imports of Japanese sewing machines into the United States market rose from 0 in 1947 or from 3,029 in 1948 to 1,093,000 in 1959. The more than a million units which were imported into the United States in 1959 included machine-carried multi-cam household sewing machines, replaceable cam machines, manual zigzag machines, and straight stitch machines capable of taking a zigzag attachment, and, therefore, of making a zigzag stitch.

[fol. 1943] To indicate the extent of the competition in somewhat different terms, in 1947 Singer's production accounted for almost 57 per cent of household sewing machine

output in the United States, other U. S. producers accounted for about 43 per cent, and imports were negligible.

For 1959, Singer's U.S. production was down to about 21 per cent of the U.S. market, other U.S. producers had been eliminated, and Japanese imports accounted for about 60 per cent of the U.S. market. This is perhaps one of the most competitive blows that U.S. industry has suffered in quite a while.

[fol. 1944] Q. Now Doctor, have you caused to be prepared a chart showing the comparison of U.S. Singer production and imports, Japanese, European and other non-Singer imports and other non-Singer U.S. production of household sewing machines for the years 1947 through 1959?

A. Yes, sir, I have.

Q. I show you this and ask you if this is the chart to which you refer (indicating)?

A. Yes, sir, it is.

Mr. Klots: May we mark this for identification.

(Marked Defendant's Exhibit 191 for identification.)

By Mr. Klots:

Q. Now Doctor, would you just explain this chart before we offer it in evidence?

Mr. Elkins: May we have, if your Honor please, a copy of the exhibit?

Mr. Klots: We have not had time to do that, Mr. Elkins. We will have it tomorrow for you—so if you cannot see it we will move it around.

Q. Will you explain the significance of the chart?

A. Proceeding up the segments of the bar, the lower blue segments are Japanese imports of household sewing [fol. 1945] machines.

We took total imports of Japanese sewing machines and adjusted them to eliminate industrial sewing machines, so this represents an adjustment for household sewing machines alone.

In the yellow bar we have European and other imports, which excludes Singer imports, and it also has been adjusted to eliminate imports of industrial sewing machines.

We see in the green bar two segments, the solid green

segment is Singer production in the United States, and the other part of the bar is Singer imports into the United States—again with industrial sewing machines eliminated.

Q. And what is the red at the top?

A. The orange segment is other U.S. production, and this was derived from the Census of Manufactures for 1947, for 1954 and for 1958, and an interpolation was made to secure the figures for the intervening years.

I might say that this bar represents the difference between the total—the orange segment represents the difference between the total output of household sewing machines in the United States. Subtracting Singer production you [fol. 1946] get a residual, which is all other U.S. products.

Mr. Klots: Your Honor, yesterday there was put in evidence the certified statements from the Department of Commerce showing imports from 1947 to 1959. That perhaps would be Exhibit D-185.

Those are the figures which we rely on when we talk about the imports.

Q. Is that right?

A. Yes.

The Court: Am I to understand that this chart is a graphic representation of what is statistically reported on Exhibit 185?

Mr. Klots: On Exhibit 185 plus some other exhibits, but it is all based on data which is now in evidence.

The Court: All Census reports of the United States.

Mr. Klots: Census reports and Singer statistics—for example, Singer imports.

The Court: I see.

Mr. Klots: There is one matter that I would like to have the doctor explain, and that is this adjustment that had to be made on account of some industrial machines are [fol. 1947] included in the import figures that we got from the Department of Commerce, and it was not until 1960 that the Department of Commerce distinguished between the household sewing machines and the industrial sewing machines.

In 1960, which is in evidence, I think, as Exhibit 186, the Department of Commerce actually showed the number of sewing machines of the household type and the number of the

industrial type. We have used that percentage and made the adjustment for the preceding years of the same percentage as was actually shown for 1960 in Exhibit 186——

Q. Is that right, Doctor?

A. Yes.

Mr. Klots: And we have had to interpolate because the Department of Commerce does not show these orange statistics, except for the years 1948, 1954 and——

The Witness: 1947.

Mr. Klots: 1947, 1954 and 1958.

So that these orange parts or bars had to be interpolated in between those years.

Q. Is that method of interpolation, Doctor, a standard statistical way of doing it?

A. Yes. We use the straight line linear technique, and I [fol. 1948] have a chart which will show it, if anybody cares to see it, just how it was done.

Q. Well, I do not know that that is necessary, but that is the way it was done?

A. Yes.

Mr. Klots: I offer this chart in evidence.

Mr. Elkins: We object. It is based on error multiplied by error. It is predicated on charts which show industrial machines included with the machines—the number of household sewing machines imported into the United States.

The Court: The witness says that he has adjusted this. Perhaps Mr. Klots, you had better go ahead with the graph and show how he did adjust it.

Mr. Klots: All right.

The Witness: There are two different adjustments.

The Court: Explain to us, in the light of the objection that has been made, just how you have adjusted this so as to exclude the machines other than the household sewing machines.

Mr. Elkins: And as I understand it, this is coming in as an "aid" to the Court?

The Court: I do not know what you mean by "aid" to [fol. 1949] the Court.

Mr. Elkins: It doesn't appear to be any kind of an aid, I submit, your Honor, if it has to depend upon interpolation,

and if it has to depend upon cases as to what the industrial machine imports were for a number of years.

The Court: We do not know what this witness is going to testify to at this point, but he has given evidence of great learning, of great intelligence, of extreme familiarity with this economic field, and on relevant market.

I will take his testimony for such guidance as I think it will give me.

Explain to me how you have, in the preparation of this chart which is now offered in evidence, taken the figures of the Department of Commerce which included machines other than household machines—how you have been able to prepare this chart which concerns only the household sewing machines.

The Witness: It is a relatively simple adjustment. We have for the year 1960 total imports of sewing machines over $10, broken down into household types and industrial types. If we take the per cent which industrial bears to the total, in the case of Japanese, for example, industrial was [fol. 1950] 5.25 per cent of total sewing machine imports in 1960 for Japan. If we then applied that same 5.25 per cent to each of the previous years, we then eliminated the amount of industrial machines which we assume to have been imported in the past years, based on the 60 per cent figure—and we did that for the case of each of the countries that went into the composite, which produced this (indicating) as well as this (indicating).

Mr. Klots: Pointing to the yellow, indicating the European imports, and the blue or purple, indicating the Japanese imports.

The Witness: That is right.

The Court: You said there was another adjustment that you made?

The Witness: Yes.

The Court: Explain that.

The Witness: The second adjustment was done to get this bar (indicating).

The Court: By "this bar" you are indicating——

The Witness: Other U.S. production.

The Court: "U.S. production"?

The Witness: Yes.

The Court: I see that in 1959, on this chart, you have no

[fol. 1951] other U.S. production of household sewing machines in the whole United States, other than Singer.

The Witness: The 1958 Census of Manufactures showed by not reporting the figure—by reporting the figure would have revealed the statistics for one company, and it is their custom when the statistics will reveal the figure for one company not to show it. Therefore Singer wrote to Census and got a certified copy what the figure would have been had it been reported, and it coincided with the Census production for 1958.

Mr. Klots: And that is Exhibit 188 that went in yesterday.

The Witness: (Continuing) And that is the reason, for other production by that time had been eliminated.

The Court: There is no other U.S. production of household sewing machines in the United States at this time?

The Witness: I believe this to be substantially the fact. Now we took the Census of Manufactures figure for 1947, for total United States production of household sewing machines, and we subtracted from that Singer production, which gave us all other U.S. production.

[fol. 1952] We did the same thing for 1954, which gave us all other U.S. production, and then we drew a straight line, and by interpreting in a linear equation, which I do not want to get into great detail now, you can pick the figures off the chart, you see. For example, if this 1947 figure——

The Court: That is the chart and the graph you prepared with the linear equation?

The Witness: Yes.

The Court: You offer it in evidence, do you, Mr. Klots?

Mr. Klots: I do. I offer it in evidence.

The Court: As an exhibit to accompany the major chart.

Mr. Klots: That is right.

The Court: We will mark that A—you offer it in evidence. It is received in evidence. The government's objection is overruled, and you may have an exception, and it is received as offered by the defendant, as an aid to the Court to assist the Court in the interpretation of the Census report.

If it does not conform with the Court's view, it will be disregarded. The government has an exception.

[fol. 1953] (Defendant's Exhibits 191 and 191-A marked in evidence.)

The Court: We will take a five-minute recess.

(Recess)

Mr. Klots: I want to make clear, sir, that we are offering this chart as an aid to the Court not only in interpreting the Census figures but any other evidence that is in the case.

The Court: And if I find that it is not so—it is simply what you contend is a graphic presentation of the documentary proof which has already been received.

Mr. Klots: That is right, sir.

The Court: All right, if it isn't I won't pay attention to it.

Mr. Klots: It can be used as an aid in interpreting the evidence.

The Court: It gives me a visual presentation.

Mr. Klots: Here is another chart which we offer on the same basis, which is exactly the same figures but put in percentage terms.

By Mr. Klots:

Q. And did you cause that chart to be prepared, Dr. Cohen?

A. Yes, I did.

[fol. 1954] (Marked Defendant's Exhibit 192 for identification.)

By Mr. Klots:

Q. This chart has the same source of information, does it not, Dr. Cohen?

A. Yes, it is simply a percentage representation of the unit figures in the other chart.

Mr. Klots: I offer it in evidence as an aid to the Court.

The Court: It will be received. The government will have an exception.

Mr. Elkins: We object to it, your Honor.

The Court: It is received simply as being a graphic representation of the defendant's contention of what the evidence already demonstrates statistically, and it is offered as an aid to the Court, and I will accept it. If I find it does not conform to the evidence, I will disregard it.

(Marked Defendant's Exhibit 192 in evidence.)

By Mr. Klots:

Q. One other question, Dr. Cohen, in view of the fact——

The Court: This is a most effective way of presenting evidence for trial purposes, particularly for a jury.

[fol. 1955] Mr. Klots: But I always think charts are very helpful, your Honor.

The Court: Yes.

Mr. Elkins: May I suggest that it depends on how they are drawn, as to whether or not they are helpful to everybody. I think I could draw a beauty but I do not think I would present it to the Court as an aid.

The Court: For instance, you take this last chart. That discloses that Japanese imports are 60 per cent of the total household sewing machine production.

It also shows that there is nobody else in America producing household sewing machines other than Singer.

It also shows that almost one-third of Singer's sales are manufactured abroad.

It also shows that the American production of household sewing machines is down to only about 20 per cent—an astounding situation—and if it is so, and it is substantiated by the evidence, it means we have lost a great American industry.

Q. In the light of the evidence stated in the hypothetical question, what would you say were the possibilities of [fol. 1956] Singer, or any other American company, monopolizing or trying to monopolize a market in which sewing machine products manufactured in Japan are a significant factor.

Mr. Elkins: I object, your Honor.

The Court: What is the ground of the objection?

Mr. Elkins: Number 1, the question—I do not understand the question.

Number 2, I do not believe that the witness has been qualified to answer the question, such as that. It seems obvious that anyone can monopolize anything.

The Court: I am not going to take it as binding. He is simply expressing his expert opinion as an economist.

Ordinarily I would not take evidence of this nature which bears upon the ultimate issue of fact that the Court must

resolve, but in a case of this type with so many exhibits I will listen to him. He may be of some help to guide the Court's mind along investigational lines, and to guide the Court to some extent in evaluating the evidence. Objection overruled.

A. As a——

Mr. Elkins: May I hear the question? I notice the witness [fol. 1957] is about to read his answer. May I hear the question repeated?

The Court: This is expert preparation. I am glad to see an expert do a thing like that.

Mr. Elkins: I am just pointing out that he doesnt have to have it repeated, but I do.

The Court: It shows that it is not an off-the-cuff answer. It shows that he has given it his expert thought.

Mr. Elkins: I am only pointing out——

The Court: I do not find any fault with that.

Mr. Elkins: I am only pointing out that I have to have it repeated, even though he does not. So may I have the question repeated?

The Court: Certainly you may.

(Question read.)

A. As an economist I would say it is impossible. The Japanese have lower labor costs than we do. They have sharply increased their productivity in recent years. They have automated their factories. They have raised the quality and durability of their products. They are an increasingly effective competitor. Even if present tariff rates were doubled, I do not believe it would have the impact of reducing Japanese sewing machine imports significantly. [fols. 1958-1959] The Japanese are most effective and efficient exporters, skilled in the techniques of penetrating world markets. Unless they were to reduce their voluntary quota of sewing machine exports to the United States, or unless we imposed a restrictive quota, the Japanese will continue to be a major factor, and a most vigorous competitor in the United States sewing machine market.

Q. Doctor, was your answer to the last question apparently based on your studies of the Japanese industries and Japanese trade?

A. Yes, sir.

Mr. Klots: I have no further questions.

* * * * * * *

[fol. 1960] Q. You say you did not rely upon sales of Japanese-made machines in the United States in directing or supervising the making of these charts.

A. We used the U.S. Department of Commerce import [fol. 1961] figures.

Q. Yes.

A. Showing Japanese imports into the United States.

Q. All right. And so it is very clear, is it, Doctor, that you did not rely upon sales of Japanese-made machines in the United States?

A. Well, I don't know that there are——

Q. Did you have any figures relating to the sales of Japanese-made machines in the United States?

A. Did I have any figures? No, sir, I did not.

Q. So these charts that were made under your supervision were not predicated on any factor that you could call sales of Japanese-made machines in the United States. Now if you will answer that you can go on, but isn't that true?

A. Well, implicit in my mind is the fact that Japanese imports do represent sales in the United States. Why else would they bring them in?

Q. Now Doctor, you are going to argue. You will agree——

The Court: Don't argue with the witness. Next question. That is the assumption that the professor made.

[fol. 1962] Q. Now you have made the assumption, in other words, that every machine that is imported into the United States has been sold; is that true?

A. No, I don't think I can assume that every machine that was imported was sold. There are probably some still in importers' stocks.

Q. All right. So you can't assume it?

A. No.

Q. All right, so that what you have reflected with the charts that were made under your supervision are two

things: one, Singer's sales, and the other imports, is that true?

A. Japanese imports.

Q. Japanese imports.

A. Yes—European and other imports.

Q. And European and other imports?

A. Yes. I should also add Singer imports as well.

Q. I beg your pardon?

A. I should also add Singer imports as well.

Q. Singer imports?

A. Yes.

Q. Yes. Now Doctor, I direct your attention, if I may, to Defendant's Exhibit 185, which are statistics from the [fol. 1963] Department of Commerce, and particularly to imports from Japan for 1959, and the figure there of 1,093,071; is that right, sir?

A. Yes.

Q. Is that figure quoted accurately by myself?

A. With total imports of over $10.

Q. Yes. Now may I direct your attention to Defendant's Exhibit 189, which in 1959 reports total imports from Japan as 1,246,898.

Have I read it properly?

A. You have read this exhibit properly, yes.

Q. Now which figure, if either, did you rely upon in supervising the making of these charts: the figure of 1,093,000-odd that appears in Defendant's Exhibit 185, or the figure 1,246,898 that appears in Defendant's Exhibit 189?

A. In the making of these two charts——

Q. Yes.

A. —we used the U.S. Department of Commerce figure, which is Exhibit 185.

Mr. Klots: And he is referring to the last two charts which went into evidence, Exhibits——

The Clerk: 191 and 192.

Q. What use did you make, Doctor, in your testimony of [fol. 1964] 1,246,898 which appears in Defendant's Exhibit No. 189?

A. Well, I don't believe that I made any direct use of it except that it was a figure which was used for the chart that was submitted last time when I testified earlier—the chart

showing the totality of Japanese imports for the three years. It was in that chart. I don't think I referred to it at all in my verbal testimony, however—as I recall. This is the chart I am referring to, Mr. Elkins (indicating).

Q. I beg your pardon?

A. This is the chart I was referring to (indicating).

Q. Do you recall opposing counsel asking you a hypothetical question in which he included the statement "the 1,246,898 Japanese exports approved by the Japanese Government in 1959 consisted of" and so forth?

A. Yes, I see that on page 1827 of the testimony, in the hypothetical question.

Q. You would have no knowledge, I assume, Doctor, as to which of these figures represent the Japanese imports—whether it is the 1,246,898 shown in Exhibit 189, or the figure of 1,093,071 as shown in Exhibit 185, would you? Would [fol. 1965] you have any information?

A. Well, technically I would rely most heavily on the United States Department of Commerce figure—I would give greatest weight to the U.S. Department of Commerce.

Q. You agree that both figures cannot be right?

A. Well, if you——

Q. When you said that you would put more weight on the United States Department of Commerce figure, were you indicating, sir, that both figures could not be right?

A. In Exhibit 190 the total of that figure is corrected to read "Approved Japanese exports to the United States", and the figure of 1,246,898 is, as I understand it, derived from the MITI figures—that is, the Japanese Ministry of International Trade and Industry, which gives these figures as approved exports of household sewing machines to the United States.

Q. Yes. Now I have directed your attention, and am still directing you to Defendant's Exhibit 189, which does not talk about, as you see, machines which are approved for exports but actual imports; isn't that true?

A. Then it is probably a misnomer. In other words, the [fol. 1966] more accurate characterization would be Japanese machines approved for export, of that one million, two hundred odd thousand figure.

Q. With relation to Defendant's Exhibit 191-A, Doctor,

which is a linear interpolation, is that what you would call it?

A. I think so, yes. This happens to be a graphic representation of the method of estimating the unknown number of sewing machines of other non-Singer production for the intermediate years, by reference to the known numbers in the years 1947, 1954 and 1958.

Q. What would you have done, Doctor, if you just had figures for the years 1947 and 1958? Would you have drawn a line from point A to what is now point C?

A. If I were using the same technique, I would have done just that.

Q. And your results would have been entirely different if you had run——

A. No.

Q. —A line from the year 1947 down to the year 1958—you would have been off, would you not, some 100,000 for the year 1954?

A. Well, I don't think I would use the expression "off". It would have been a difference in the point that was plotted, [fol. 1967] but the key points would have been exactly the same. In other words, it would have showed that in 1947 you had so much other U.S. production, and by 1958 it had disappeared completely.

Q. Yes. So that if you were to pursue your system there and to draw a line between those two years, a straight line, you would, would you not, as you hit the year 1954, have a figure of around 100,000?

A. It would have shown the downward trend.

Q. Yes.

A. Luckily we have the extra figure which makes it somewhat more accurate than a direct line would have been.

Q. But taking the two years, in the absence of the middle year, if it were not available, your figure for the year 1954 would have come out, would it not, to 100,000 and plus?

A. I don't know, Mr. Elkins. I haven't done it, so I cannot subscribe to your figure.

Q. It is only a straight line, is it not, Doctor?

A. Yes, but we used a formula and a calculating machine to get the exact figure. I said you could plot it off here but we did not do it that way. The formula is a linear represen-

tation of this line. When you solve the unknowns, which I [fol. 1968] will be glad to do if I had a blackboard——

Q. No, you do not have to, but when you are solving for two lines you merely draw a line between them. When you are solving for two points, don't you draw a straight line between them?

A. Well, this linear equation represents that.

Q. Yes.

A. It enables you to read the figure of one axis, making the assumption on the other axis.

Q. So if you had, as I say, the year 1947 and the year 1958 and no other year, you would have drawn a straight line in accordance with your formula, from 1947 to 1958, is that true?

A. I don't know. I might have reviewed the data again, and perhaps do it with another technique. One could fit a curve, for example, into the same data.

Q. And would the curve have been just as accurate?

A. Well, the word "accurate"—these are estimations——

The Court: Aren't you spending too much time on this—the theory of graphs and linear equations? The chart is certainly presented to give a graphic representation that 60 per cent of the domestic sewing machines are of Japanese [fol. 1968a] origin, and only 20 per cent come from United States manufacturers, and 20 per cent are derived from European manufacturers.

Q. Doctor, in relation to these percentages which appear on the charts here——

Mr. Klots: Would you mind giving the exhibit numbers?

Mr. Elkins: It is really not essential, sir.

[fol. 1969] The Court: What is it, 192 and 191?

The Clerk: 192 is on the easel. 191 is on the floor.

Q. Did you have any statistics showing the Singer share of the market in the United States dollarwise?

A. The reason I am hesitating is the "Did you have."

There are figures showing Singer sales dollarwise in the United States.

Q. Yes.

A. We did not use them because we preferred to use the unit figures, the number of machines.

Q. You preferred to use that?

A. Yes. The reason—would you like to know the reason for this?

Q. I beg your pardon?

A. Would you like to know the reason for using unit figures rather than dollar figures?

The Court: Yes, I would. Tell me.

The Witness: The reason is that over a time the price level has risen and the dollar figures would reflect the impact of inflation and you therefore have to deflate for rising prices.

The Court: For instance, a pair of shoes that we might have bought for $12 ten years ago, today we have to pay $24?

[fol. 1970] The Witness: Yes, sir.

The Court: Or for a hat that we used to get up on Park Avenue for $12, now you have to pay $25.

The Witness: Yes.

The Court: All right. A very sensible reason.

Q. Before pursuing this method did you first try it on a dollar basis, Doctor?

A. No, sir.

Q. You did not try it at all?

A. No, sir.

Q. To get the Singer dollar share of the market here in the United States?

A. No, sir.

The Court: The dollar basis might throw us all out of calculation and all out of proportion, you see, because the dollar basis of the American product has increased far more than the dollar basis of the foreign-manufactured product, which makes the Japanese machines more highly competitive.

Mr. Elkins: All right. We have no further questions.

Mr. Klots: I have no further questions.

The Court: All right, Professor, thank you.

[fol. 1971] The Witness: Thank you, sir.

(Witness excused)

SUPREME COURT OF THE UNITED STATES

OCTOBER TERM, 1962

No. 438

UNITED STATES, APPELLANT,

vs.

THE SINGER MANUFACTURING COMPANY

APPEAL FROM THE UNITED STATES DISTRICT COURT FOR THE SOUTHERN DISTRICT OF NEW YORK

Volume II

INDEX*

	Original	Print
Record from the United States District Court for the Southern District of New York—Continued		
Transcript of trial hearings—stenographer's minutes, May 2, 1961-June 27, 1961—Continued		
Testimony of Dodge E. Barnum in rebuttal by plaintiff—direct by Mr. Elkins	1971	929
—cross by Mr. Pettit	1987	935
—by the Court	2008	946
—cross by Mr. Pettit	2013	948

* Several exhibits bear two different exhibit numbers. In every such instance the exhibit was originally an exhibit to the Agreed Statement of Facts and bore an exhibit number preceded by the letter S, such as S-1, S-2, S-3, et cetera. Notwithstanding the fact that they bore "S" exhibit numbers, at times some were introduced in evidence with plaintiff's exhibit number and in two instances with a defendant's exhibit number. "S" exhibits bearing a Government exhibit number have been designated by the Government by the latter number, with the "S" exhibit number in parentheses, for example, "Govt. 2 (S-1)".

For complete list of "S Exhibits" see Index, page xxv.

	Original	Print
Record from the United States District Court for the Southern District of New York—Continued		
Transcript of trial hearings—stenographer's minutes, May 2, 1961-June 27, 1961—Continued		
Testimony of Dodge E. Barnum in rebuttal by plaintiff—direct by Mr. Elkins—Continued		
Mrs. Lilly Hovespian—		
—direct by Mr. Corcoran	2028	952
—cross by Mr. Klots	2040	956
—by the Court	2044	958
—cross by Mr. Klots	2048	961
—redirect by Mr. Corcoran	2071	970
Julius Margulies—		
—direct by Mr. Elkins	2072	970
—cross by Mr. Klots	2081	974
John H. Billings in rebuttal by Government—direct by Mr. Weinstein	2090	974
—cross by Mr. Pettit	2158	978
Colloquy between court and counsel	2258	989
Testimony of Edward J. Herbst in surrebuttal by the defendant—direct by Mr. Pettit	2263	991
—by the Court	2275	995
—direct by Mr. Pettit	2279	997
—by the Court	2281	997
Testimony of Edward J. Herbst in surrebuttal by the defendant—direct by Mr. Pettit	2285	999
—by the Court	2292	1002
—cross by Mr. Weinstein	2294	1003
Testimony of John Robert Curreri in surrebuttal by the defendant—direct by Mr. Pettit	2306	1004
—cross by Mr. Weinstein	2315	1006
Reporters' certificate (omitted in printing)	2328	
COURT'S EXHIBITS	5768	1008
4—Stipulation and order re scope of the grant secured by Letters Patent, etc., dated May 16, 1961	5768	1008
7—Memorandum in aid of the Court re invention or priority date, filing and issue dates and fundamental coverage of pertinent patents, dated May 23, 1961	5787	1010
8—Memorandum in aid of the Court re legal status of pertinent patents, dated May 23, 1961	5792	1014

	Original	Print
Record from the United States District Court for the Southern District of New York—Continued		
GOVERNMENT'S EXHIBITS	3437	1017
2 (S-1)—Letter from Patent Department, Singer Mfg. Co. to M. L. Waterman, Vice President of Singer Mfg. Co., dated April 26, 1955	3437	1017
3—Memorandum prepared by Mr. Williams of the Singer Patent Department, CAW-Z dated June 16, 1955 re "The Purchase by Singer of the U.S. Carl Harris Patent No. 2,693,778 and the Foreign Patents and Patent Applications Corresponding to Such Patent (excerpts)	3440	1019
4—Letter from M. C. Lightner to W. P. Evans, Milan, Italy, dated September 12, 1955	3451	1022
5—Letter from Mr. Stanford, head of the Singer Patent Department to M. C. Lightner, dated September 9, 1955	3456	1025
8—Letter from W. P. Evans, Italy Singer to M. L. Waterman, dated October 10, 1955	3459	1027
9—Letter from M. L. Waterman to W. P. Evans, Milan, Italy, dated October 14, 1955	3461	1029
10—Translation of memorandum from Dr. Ernst Wiegand to Germany Singer, dated November 14, 1955 re "Zigzag Sewing Machines with a Multiple Number of Cams."	3463	1030
11 (S-2)—Agreement (Patent) between The Singer Manufacturing Company of New Jersey and Arnaldo S. p.a. Vigorelli of Italy, dated November 17, 1955	3466	1032
12—Memorandum prepared by Mr. Williams, CAW-M-dated April 14, 1958 re "Singer-Vigorelli United States Patent Interference (excerpts)	3470	1035
13—Letter from Patent Department, Singer Mfg. Co. to Leo Adamson, Frankfurt, Germany, dated December 28, 1955	3474	1037
14—Letter from Patent Department, Singer Mfg. Co. to Dr. S. Lando, dated December 23, 1955	3476	1039
15—Letter from Italy Singer to M. L. Waterman, dated December 10, 1955	3478	1040
16—Letter from Patent Department, Singer Mfg. Co. to M. L. Waterman, dated January 19, 1956	3479	1041
17—Letter from M. L. Waterman to C. F. Baumann, dated February 6, 1956	3485	1045
18—Letter to C. F. Baumann, dated February 21, 1956	3488	1048

	Original	Print
Record from the United States District Court for the Southern District of New York—Continued		
GOVERNMENT'S EXHIBITS—Continued		
19—Transmittal letter to M. L. Waterman dated March 3, 1956 with enclosure of translation of Dr. Lando's report on his visit to Vigorelli, Pavia, on February 29, 1956	3489	1050
20—Letter from M. L. Waterman, Vice President to E. Winteler, Geneva, dated March 14, 1956	3495	1055
22—Letter to M. L. Waterman, dated March 23, 1956	3499	1058
23—Letter from Deriaz, Kirker and Cie to Messrs. Cruikshank & Fairweather, dated April 17, 1956	3501	1060
24—Memorandum from M. L. Waterman to M. L. Lightner, dated April 13, 1956	3502	1061
25—Translation of Agreement on basis of discussion of April 12, 1956 between Mr. Waterman, Mr. Stanford, Mr. Kirker, Mr. Winteler and Messrs. Gegauf, Senior and Junior, H. Bernhard, F. Meyer and Mr. Willi	3505	1064
26 (S-3)—Agreement between The Singer Mfg.		
27 (S-7)—Memorandum of Notes dictated at Co. and Fritz Gegauf, signed April 14, 1956	3509	1066
Milan, Friday, April 20, 1956 by M. L. Waterman	3515	1068
28—Letter, "Monday" (April 30, 1956) from Mr. Stanford to "Chet" (Williams) and "Marshall" (Breen), Patent Department	3518	1072
30—Letter from M. L. Waterman to C. F. Baumann, dated June 11, 1956	3523	1074
31—Letter from Italy Singer to M. L. Waterman, dated June 19, 1956	3524	1075
32—Letter from S. Lando to J. G. Stanford, Munich, dated September 19, 1956	3526	1077
33—Letter from Fritz Gegauf to Mr. Waterman, dated September 3, 1956	3528	1079
35—Letter from M. L. Waterman to Mr. Fritz Gegauf, dated September 7, 1956	3530	1080
36—Letter from J. G. Stanford, Patent Department, to Leon M. Strauss, dated September 12, 1956	3532	1081
37—Letter to Dr. S. Lando, dated October 9, 1956	3533	1082
38—Letter from Patent Department, Singer Mfg. Co. to M. L. Waterman, dated October 22, 1956	3534	1083

Record from the United States District Court for the Southern District of New York—Continued

	Original	Print
GOVERNMENT'S EXHIBITS—Continued		
39—Proposed letter to Mr. Fritz Gegauf	3536	1084
40—Letter from M. L. Waterman to J. G. Stanford, dated October 23, 1956	3538	1085
41—Letter to Mr. Fritz Gegauf, dated October 24, 1956	3539	1086
42—Letter from Patent Department, Singer Mfg. Co. to M. L. Waterman, dated November 7, 1956	3541	1087
43—Transmittal letter from Mr. Stanford, Patent Department, Singer Mfg. Co. to M. L. Waterman, dated September 9, 1957 with proposed letter to Mr. Fritz Gegauf	3542	1088
44—Letter from M. L. Waterman to Mr. Fritz Gegauf, dated September 12, 1957	3545	1090
45—Letter from Mr. Fritz Gegauf to Mr. Waterman, dated September 17, 1957	3547	1092
47—Letter from Patent Department, Singer Mfg. Co. to M. L. Waterman, dated September 23, 1957	3549	1093
49—Letter from M. L. Waterman to Milton C. Lightner, dated October 17, 1957	3553	1095
50—Cable to Pyecombe for Stanford, Elizabethport, N. J. from Waterman, dated October 24, 1957	3555	1096
51—Cable from J. G. Stanford to Mr. M. L. Waterman, dated October 24, 1957	3558	1097
52—Letter from Deriaz, Kirker & Cie (G. E. Kirker) to Mr. J. G. Stanford, dated October 25, 1957	3559	1098
53—Letter from J. G. Stanford, Patent Department, Singer Mfg. to Mr. G. Kirker, dated October 30, 1957	3561	1100
55—Letter from J. G. Stanford, Patent Department, Singer Mfg. to Mr. G. Kirker, dated November 7, 1957	3565	1102
56—Letter from Deriaz, Kirker & Cie (G. E. Kirker) to Mr. J. G. Stanford, dated November 18, 1957	3567	1104
58 (S-10)—Agreement between The Singer Mfg. Co. and Fritz Gegauf, dated December 5, 1957	3577	1108
59—Formal assignment made December 5, 1957 by Fritz Gegauf to Singer Mfg. Co.	3580	1110
60—Letter from Singer Mfg. Co. to M. L. Waterman, dated December 6, 1957	3582	1112

	Original	Print
Record from the United States District Court for the Southern District of New York—Continued		
GOVERNMENT'S EXHIBITS—Continued		
62—Transmittal letter from J.G. Stanford, Patent Department Singer Mfg. Co. to D. P. Kircher, Vice President of Singer, dated December 13, 1957	3585	1114
Memorandum of J. G. Stanford's Recent Visit to Switzerland	3586	1115
63—Letter from J. G. Stanford to Mr. Gegauf, dated December 18, 1957	3601	1123
64—Transmittal letter from Patent Department, Singer Mfg. Co. to M. L. Waterman, dated July 17, 1958	3603	1124
Proposed letter to Mr. F. Gegauf	3604	1125
65—Letter from M. L. Waterman to Mr. F. Gegauf, dated July 21, 1958	3605	1125
66—Note to Mr. J. G. Stanford from M. L. Waterman, dated August 4, 1958	3606	1126
Letter from F. Gegauf to M. L. Waterman, dated July 25, 1958	3607	1127
67—Transmittal letter from Patent Department, Singer Mfg. Co. to M. L. Waterman, dated January 28, 1958	3609	1129
Vice President's Department—Summary of Patent Department Report for the Year 1957	3610	1129
68—Letter written during last week of April 1956, dated "Thursday" by Mr. Stanford to "Dear Chet" (Mr. Williams)	3613	1130
69—Letter from J. G. Stanford, Patent Department, Singer Mfg. Co. to Leo Adamson, Germany, dated January 19, 1956	3615	1132
70—Letter from J. G. Stanford, Patent Department, Singer Mfg. Co. to L. Adamson, dated March 15, 1956	3616	1133
71—Letter from Mr. Sanford, Karlsruhe to "Dear Chet" (Mr. Williams), dated "Friday morning" (April 27, 1956)	3618	1134
72 & 73—Cablegrams from Mr. Williams, Patent Department to J. G. Stanford, Germany, dated April 30, 1956	3622	1135-6
74—Letter from L. Adamson to M. L. Waterman, dated May 25, 1956	3624	1137
75—Letter from Mr. Lando, Italy, Singer to J. G. Stanford, dated June 12, 1956	3626	1139
77—Letter from Mr. Williams, Patent Department to L. Adamson, dated July 16, 1956	3629	1140
78—Letter from Mr. Waterman to M. C. Lightner (President of Singer), dated November 2, 1956 (excerpts)	3631	1141

	Original	Print
Record from the United States District Court for the Southern District of New York—Continued		
GOVERNMENT'S EXHIBITS—Continued		
84—Letter from Patent Department, Singer Mfg. Co. to M. L. Waterman, dated December 12, 1956	3645	1142
85—Letter from Patent Department, Singer Mfg. Co. to Messrs. Cruikshank & Fairweather, dated January 3, 1957 (excerpts)	3650	1145
86 (S-4)—Cross-licensing agreement between the Singer Manufacturing Company and Messerschmitt, A.G., dated April 16, 1957	3652	1146
87—Memorandum from "Max" (M. L. Waterman), Munich to M. C. Lightner, N.Y., dated April 18, 1957	3654	1148
88—Cablegram from Waterman to Mr. Lightner, dated April 17, 1956	3656	1149
89—Letter from Mr. Stanford, Patent Department, Singer Mfg. Co. to Dr. E. Wiegand, dated April 25, 1957	3657	1150
93—Letter from L. Adamson to J. G. Stanford, dated May 20, 1957	3666	1152
94—Letter from Mr. Williams, Patent Department, Singer Mfg. Co. to L. Adamson, dated May 24, 1957	3668	1153
95 (S-6)—Agreement between The Singer Manufacturing Company and Messerschmitt, dated June 4, 1957	3671	1157
96 (S-5)—Formal assignment made June 4, 1957 by Messerschmitt A.G. to the Singer Manufacturing Company	3673	1159
97—Letter from the Patent Department, Singer Mfg. Co. to Dr. E. Wiegand, Germany, dated July 1, 1957	3675	1160
103—Letter from M. L. Waterman to Milton C. Lightner, dated October 17, 1957	3685	1161
104—Letter from L. Adamson to J. G. Stanford dated January 24, 1958	3687	1163
105—Cablegram from J. G. Stanford to Leo Adamson, dated January 28, 1958	3691	1167
106—Letter from Frank H. Marks to Harold J. Stelzer, dated October 1, 1958	3692	1168
107—Memorandum to Mr. Bruder, Vice President of Singer, dated November 12, 1958	3695	1171
108—Letter from Mr. Stanford, Patent Department, Singer Mfg. Co. to D. P. Kircher, dated December 16, 1958	3698	1173
109—Letter from Mr. Williams, Patent Department, Singer Mfg. Co. to D. P. Kircher, dated January 7, 1959	3700	1174

	Original	Print
Record from the United States District Court for the Southern District of New York—Continued		
Government's Exhibits—Continued		
Statement regarding license agreement between Singer and Sears, Roebuck & Company	3702	1175
111—Letter from Thure Oberg to Donald P. Kircher, dated April 18, 1959	3707	1177
113—Memorandum prepared by J. G. Stanford, April 30, 1959	3709	1178
114—Letter from Thure Oberg to Donald P. Kircher, dated April 30, 1959	3711	1179
115—Cablegram from Kircher to Thure Oberg, dated May 4, 1959	3712	1181
116—Letter from Dr. Carl Schwalb to Mr. Donald P. Kircher, dated March 9, 1959	3713	1182
117—Letter from Singer Mfg. Co. to J. G. Stanford, dated March 17, 1959	3714	1183
118—Letter from Mr. Stanford, Patent Department, Singer Mfg. Co. to D. P. Kircher, dated March 20, 1959	3715	1184
119—Proposed letter to Dr. C. Schwalb	3716	1185
120—Letter from Donald P. Kircher to Dr. Carl Schwalb of Phoenix, dated April 3, 1959	3717	1186
121—Letter from Deriaz, Kirker & Cie (G. Kirker) to Mr. Stanford, dated December 26, 1957	3718	1187
122—Letter from Mr. Stanford, Patent Department, Singer Mfg. Co. to Mr. G. Kirker, dated January 6, 1958	3719	1188
124—Letter from G. Kirker to Mr. Stanford, dated January 17, 1958	3721	1189
125—Letter from Mr. Stanford, Patent Department, Singer Mfg. Co. to Mr. G. Kirker, dated January 21, 1958	3722	1190
126—Letter from Mr. Stanford to M. L. Waterman, dated January 30, 1958 (excerpts)	3723	1191
127—Letter from Mr. Stanford, Patent Department, Singer Mfg. Co. to Mr. G. Kirker, dated February 18, 1958	3725	1192
130—Letter from M. L. Waterman, Vice President to F. Gegauf, dated May 27, 1959	3729	1193
132—Letter from Frits Gegauf to Singer Mfg. Co., dated June 10, 1959 (excerpts)	3733	1194
133—Letter from Deriaz, Kirker & Cie. (G. Kirker) to Mr. Stanford, dated June 17, 1959	3736	1196
136—Letter from Patent Department, Singer Mfg. Co. to G. Kirker, dated July 14, 1959	3743	1199

	Original	Print
Record from the United States District Court for the Southern District of New York—Continued		
GOVERNMENT'S EXHIBITS—Continued		
137—Letter from M. L. Waterman to F. Gegauf, dated July 14, 1959	3745	1201
139—Forwarding letter from Deriaz, Kirker & Cie (G. Kirker) to Mr. Stanford, dated July 24, 1959	3748	1203
Executed agreement between The Singer Manufacturing Company and Fritz Gegauf, etc., dated July 22, 1959	3749	1204
Affidavit of Fritz Gegauf, dated July 22, 1959	3751	1205
141—Letter from Mr. Lightner to M. L. Waterman, dated April 8 1957	3754	1207
142—Letter from M. L. Waterman, Frankfurt to "Milton" (Mr. Lightner), dated April 16	3757	1209
143—Memorandum from Mr. Aurell, Oriental Dept, Singer to Mr. M. L. Waterman, re "Vigorelli Machine", dated December 29, 1959	3760	1211
144—Memorandum from M. C. Lightner referred to Mr. M. L. Waterman, dated January 4, 1960	3762	1213
154—Letter from Donald P. Kircher to H. R. Crawford, Tokyo, dated March 14, 1958	3802	1213
155—Memorandum prepared by Mr. Williams of the Singer Patent Department, CAW-K, dated May 20, 1958 handed to a representative of Brother International by Mr. Waterman	3805	1215
156—Letter from J. G. Stanford to J. M. McKinnon, dated July 31, 1958	3806	1216
157—Letter from M. L. Waterman to C. F. Baumann, dated December 22, 1958	3808	1218
158—Letter from M. L. Waterman to Fritz Gegauf, dated December 22, 1958	3809	1219
159—Letter from C. F. Baumann to M. L. Waterman, dated December 30, 1958	3810	1221
160—Letter from Fritz Gegauf to Mr. Waterman, dated January 21, 1959	3811	1220
161—Letter from Assistant Vice President, Singer Mfg. Co. to J. M. McKinnon, Tokyo, dated dated Jahuary 27, 1959	3812	1222
163—Cablegram from M. L. Waterman, Clydebank to Goosman (Singer), dated May 2, 1955	3815	1224
169—Letter from T. Krzyzaniak, Singer Mfg. Co. to J. G. Stanford, dated January 2, 1959	3830	1225

	Original	Print
Record from the United States District Court for the Southern District of New York—Continued		
Government's Exhibits—Continued		
172 (S-13)—Reissue Patent 24,370 granted October 8, 1957 to Carl Harris, assignor to The Singer Manufacturing Company for Embroidering Mechanism for Zigzag Sewing	3882	1229
173—Correspondence of U.S. Patent Office, dated December 14, 1955, April 27, 1956, May 11, 1956, August 22, 1956, June 10, 1957 and August 26, 1957 re amendments to application of Carl Harris, Serial No. 516,058 for Embroidering Mechanism for Zigzag Machines	3945	1237
174—Patent 2,832,302, granted April 29, 1958 to Fritz Gegauf, assignor, by mesne assignments, to The Singer Manufacturing Company for Sewing Machine	3980	1355
175—Correspondence of U.S. Patent Office, dated January 16, 1956, February 15, 1956 and April 4, 1956 re amendments to application of Fritz Gegauf, Serial No. 358,377 for Sewing Machine	4088	1267
177 (S-16)—Patent 2,877,726 granted March 17, 1959 to Fritz Gegauf, assignor to The Singer Manufacturing Company for Zig-Zag Sewing Machines	4219	1273
179 (S-15)—Patent 2,810,360 granted October 22, 1957 to Martin Richard Perla, assignor to The Singer Manufacturing Company for Ornamental Stitch Sewing Machines	4345	1284
183 (S-14)—Patent 2,862,468 granted December 2, 1958 to Ralph E. Johnson, assignor to The Singer Manufacturing Company for Ornamental Stitch Sewing Machines	4550	1295
184—Application of Ralph E. Johnson for Patent on and Improvement in Ornamental Stitch Sewing Machines, Serial No. 471766, and correspondence mailed January 30, 1956, September 12, 1957 and September 26, 1958	4591	1327
188 (S-22)—Statement showing Machine-Carried Multiple Cam Zigzag Sewing Machines exported to the United States from Europe which infringed any of the patents listed	2582	1332
189 (S-23)—Statement showing Machine-Carried Multiple Cam Zigzag Sewing Machines exported to the United States in 1957, 1958, 1959 from Europe and Japan which infringed the Second Gegauf Patent or the Perla Patent	2583	1332

	Original	Print
Record from the United States District Court for the Southern District of New York—Continued		
GOVERNMENT'S EXHIBITS—Continued		
190 (S-24)—Statement showing United States Sales of Household Machines by Style and Year 1952 through 1960	2584	1333
191 (S-25)—Statement showing Japanese Zigzag Sewing Machines imported into United States for years 1957, 1958 and 1959	2585	1334
192 (S-26)—Statement showing Number of Multiple Cam Japanese Zigzag Sewing Machines Imported into United States which come within Gegauf Patent No. 2,832,302 Set Forth by Manufacturer and Trade Name	2586	1335
193 (S-27)—Schedule showing Number of Multiple Cam Japanese Zigzag Sewing Machines imported into United States which do not come within Gegauf Patent No. 2,832,302 set forth by Manufacturer and Trade Name for years 1957, 1958 and 1959	2587	1335
194 (S-28)—Statement showing European Zigzag Machine Carried Multiple Cam and Replaceable Cam Sewing Machines imported into United States for years 1957, 1958 and 1959	2588	1336
195 (S-29)—Statement showing Number of Multiple Cam European Zigzag Sewing Machines imported into the United States which come within Gegauf Patent No. 2,832,302 set forth by Manufacturer and Trade Name for the years 1957, 1958 and 1959	2589	1336
196 (S-30)—Statement showing Number of Multiple Cam European Zigzag Sewing Machines imported into the United States which do not come within Gegauf Patent No. 2,832,302, set forth by Manufacturer and Trade Name	2590	1337
197 (S-86)—Statement showing Manufacturer, Model Name, Type of Machine and Price	2675	1338
199—Letter from Patent Department, Singer Mfg. Co. to Mr. G. Kirker, dated October 29, 1957	5001	1340
200—Advertisement on Singer Slant-O-Matic that appeared in 13 magazines during the Spring of 1959	5005	1343
201—Instruction book for Singer Slant-O-Matic 401 by The Singer Mfg. Co. (excerpts)	5006	1344
203—Advertisement appearing in Vogue Pattern Book, June-July 1957 for Singer Sewing Machines	5133	1350

	Original	Print
Record from the United States District Court for the Southern District of New York—Continued		
GOVERNMENT'S EXHIBITS—Continued		
205, 205A and 205D—Advertisements appearing for Brother International Corporation showing various models of their sewing machines	5134	1351
208—Advertisement of May, 1959 for New Singer Slant-Needle Series	5143	1354
208B—Advertisement for December 1959 for various models of Singer Sewing Machine appearing in 6 magazines	5145	1355
208 C, D, E & F—Script for TV announcements for Singer Slant Needle family as recorded August 19, 1959, October 9, 1959 and May 20, 1959	5146	1357
DEFENDANT'S EXHIBITS		
1—Letter from Mr. Stanford, Patent Department, Singer Mfg. Co. to M. L. Waterman, dated March 25, 1954	5163	1365
2—Letter from M. L. Waterman to J. G. Stanford, dated February 11, 1955	5168	1368
3—Letter from Patent Department, Singer Mfg. Co. to M. L. Waterman, dated February 23, 1955	5169	1369
4—Letter from Mr. Stanford, Patent Department, Singer Mfg. Co. to M. L. Waterman, dated December 2, 1954	5171	1370
5—Letter from Patent Department, Singer Mfg. Co. to M. L. Waterman, dated December 16, 1954	5174	1372
6—Transmittal memorandum to Mr. W. P. Evans, Italy from M. L. Waterman with letter dated December 20, 1954	5182	1376
7—Transmittal memorandum to Mr. L. Adamson, Germany from M. L. Waterman with letter dated December 20, 1954	5185	1378
8—Letter from Mr. Adamson to M. L. Waterman, dated January 3, 1955	5188	1380
9—Letter from Mr. Evans, Italy Singer to Mr. M. L. Waterman, dated January 12, 1955	5190	1382
11—Letter from Patent Department, Singer Mfg. Co. to Dr. Lando, Italy Singer, dated June 16, 1955	5194	1383
12—Letter from M. C. Lightner to W. P. Evans, dated August 16, 1955	5197	1385
13—Letter from W. P. Evans to M. C. Lightner, dated August 30, 1955	5199	1387

	Original	Print
Record from the United States District Court for the Southern District of New York—Continued		
Defendant's Exhibits—Continued		
15—Letter from Italy Singer to M. L. Waterman, dated October 20, 1955	5202	1388
17—Letter from W. P. Evans to M. L. Waterman, dated October 24, 1955	5205	1390
18—Telegram from Patent Department, Singer Mfg. Co. to Mrs. E. L. Snider, dated October 25, 1955	5206	1391
19—Letter from Patent Department, Singer Mfg. Co. to James M. McKinnon, Tokyo, dated October 25, 1955	5207	1392
20—Letter from Italy Singer to attention of Mr. A. Vigorelli, dated November 19, 1955	5211	1394
21—Letter from Singer Sewing Machine Company, Tokyo to Mr. J. G. Stanford, dated November 26, 1955	5212	1395
22 & 23—Letters from Singer Sewing Machine Company, Tokyo to Mr. J. G. Stanford, dated December 30, 1955 and January 20, 1956	5213	1396-98
24—Letter from Patent Department, Singer Mfg. Co. to Mr. James H. McKinnon, dated January 26, 1955	5217	1401
25—Letter from Singer Sewing Machine Co., Tokyo to Mr. J. G. Stanford, dated January 28, 1956	5219	1402
26—Letter from Patent Department, Singer Mfg. Co. to Mr. J. M. McKinnon, dated February 7, 1956	5221	1405
27—Letter to Mr. Edgar Winteler, dated March 1, 1956	5224	1406
28—Letter from Mr. Stanford, Patent Department, Singer Mfg. Co. to M. L. Waterman, dated March 8, 1956	5225	1408
Proposed letter from Mr. Stanford to Mr. E. Winteler		
29—Letter from Vice President to C. F. Baumann, dated March 9, 1956	5229	1410
30—Cablegram from Waterman, dated April 13, 1956 re "Yesterday's Steckborn Conference"	5230	1411
31—Bernina Agreement—dictated by J. G. Stanford at Zurich, April 15, 1956	5231	1411
Cablegram sent to Mr. Lightner by Mr. Waterman (dictated over phone), April 16, 1956	5238	1419
34—Letter from Patent Department, Singer Mfg. Co. to Mr. K. Gebhardt, dated February 11, 1957	5241	1420

	Original	Print
Record from the United States District Court for the Southern District of New York—Continued		
DEFENDANT'S EXHIBITS—Continued		
35—Letter from Patent Department, Singer Mfg. Co. to Mr. M. L. Waterman, dated March 13, 1957	5243	1421
Patent Department Report for the Year 1956	5244	1421
36 (S-8)—Agreement between Singer and Fritz Gegauf, not signed or dated	5247	1422
39—Letter from Patent Department, Singer Mfg. Co. to D. P. Kircher, dated April 16, 1958	5256	1425
40—Memorandum by Mr. Waterman, Subject: Second Visit of Mr. M. Yasui, President of Brother Company, at 149 Broadway, dated May 20, 1958	5257	1426
41—Letter from Mr. Crawford, Singer Sewing Machine Company to Mr. J. M. McKinnon, Tokyo, dated August 5, 1958	5259	1427
42—Letter from Mr. Stanford, Patent Department, Singer Mfg. Co. to Mr. M. L. Waterman, dated August 26, 1958	5260	1428
43—Letter from Patent Department, Singer Mfg. Co. to M. L. Waterman, dated September 17, 1958	5262	1430
44—Letter from Patent Department, Singer Mfg. Co. to M. L. Waterman, dated December 10, 1958	5263	1431
45—Transmittal letter from Patent Department, Singer Mfg. Co. to M. L. Waterman, dated January 14, 1959	5265	1433
Patent Department Report for the year 1958	5266	1433
46—Letter from Leon Jolson, Necchi Sewing Machine Sales Corp. to Mr. Donald Kirchner, dated February 2, 1959	5269	1436
48—Letter to Mr. Leon Jolson, Necchi Sewing Machine Sales Corp. dated February 26, 1959	5271	1437
49—Letter from David S. Kane to Branville M. Brumbaugh, dated April 29, 1959	5272	1438
50—Letter from "Brummie" (B. M. Brumbaugh) to David S. Kane, dated April 30, 1959	5274	1440
51—Letter from Singer Mfg. Co., Director to United States Treasury Department, Bureau of Customs, dated May 13, 1959 (excerpts)	5276	1441
52—Letter from Granville M. Brumbaugh to Frank W. Schattschneider, dated May 18, 1959	5281	1442
53—Letter from Patent Department, Singer Mfg. Co. to Donald P. Kircher, President, dated October 14, 1959	5282	1443

Record from the United States District Court for the Southern District of New York—Continued

	Original	Print
DEFENDANT'S EXHIBITS—Continued		
55—Letter from Patent Department, Singer Mfg. Co. to M. L. Waterman, Vice President, dated August 26, 1958	5286	1444
56—Letter from Patent Department, Singer Mfg. Co. to L. Adamson, Frankfurt, Germany, dated December 31, 1958	5288	1445
57—Letter from Fritz Gegauf, Sr. to M. L. Waterman, dated March 6, 1959	5289	1446
58—Letter from United States Patent Office Examiner to Michael S. Striker, re Serial No. 393,760	5290	1447
59—Letter from Michael S. Striker to Cicogna Franco & C, Italy, dated January 23, 1958 re Serial No. 393,760	5292	1449

DEFENDANT RESTS

Mr. Pettit: We rest, your Honor.

The Court: Defendant rests.

* * * * * * *

DODGE E. BARNUM, called as a witness by the Plaintiff in rebuttal, being first duly sworn, testified as follows:

Direct examination.

By Mr. Elkins:

Q. What is the address of your residence, Mr. Barnum?

A. 134 Shaker Boulevard, Cleveland, Ohio.

Q. Where are you employed, sir?

A. White Sewing Machine Corporation.

Q. And where is the White Sewing Machine Corporation [fol. 1971a] located?

A. Well, our particular Division headquarters are at 117-17 Berea Road—that is actually in Lakewood, Ohio.

[fol. 1972] Q. In what position do you serve White Sewing Machine, sir?

A. I am a vice president and generally identified as merchandising manager.

* * * * * * *

[fol. 1973] Q. Your company, White, formerly manufactured sewing machines, did it, sir?

A. Right.

Q. Until when?

A. We suspended in September 1957.

Q. What types of household sewing machines did White manufacture?

A. Just the straight stitch machine.

Q. Since White has stopped manufacturing, has it imported machines, sir?

A. Yes.

Q. What type of machines does it import?

A. Well, it is commonly described as straight stitch machine, the manually-controlled zigzag machine and the replaceable cam automatic machine.

Q. Replaceable cam type.

A. Zigzag, yes.

Q. What is the level of business of the customers of White?

A. With very very small exception they are retailers. [fol. 1974] Dealers we call them, direct dealers.

Q. In the performance of your duties do you personally contact these customers?

A. Regularly.

Q. What is that, please?

A. Regularly.

Q. For what purpose do you contact them, sir?

A. Well, primarily to sell, and in that responsibility it is a matter of assisting with promotions and helping ad planning, but essentially selling.

Q. Do any of your subordinates contact your customers?

A. Yes. We have about a dozen men in the field throughout the United States that are referred to as regional sales managers.

Q. And do these regional sales managers report to you on their customer contacts?

A. Yes.

Q. How frequently, sir?

A. Well, at least once a week. Sometimes, depending on the situation, more frequently.

Q. Mr. Barnum, does White sell a built-in cam machine?

A. No.

[fol. 1975] Q. What is the reaction of your customers to the fact that White does not sell a built-in cam machine?

A. Well——

Mr. Klots: I object to the question as not qualified to answer.

The Court: I think he is. I will take it at this point. You may cross-examine him later on as to his qualifications. You have an exception to my ruling.

You may answer.

Q. The question, sir, was, what is the reaction of your

customers to the fact that White does not sell a built-in cam machine or have one to sell?

Mr. Klots: I also object on the ground that I don't know what the word "reaction" means; to the form of the question.

The Court: Of course it is a little indefinite.

By the Court:

Q. Do you find amongst your customers a demand for any specific type machine? That would be the fairer way to put it, perhaps.

A. We do.

Q. What specific fields of demand have you found to be present amongst your customers with reference to household sewing machines?

[fol. 1976] A. Well, we are regularly criticized by large numbers of our dealers for not offering the so-called built-in cam automatic machine. They feel that this is referred to in their conversations as the top of the line, and they claim that there is a steady and constant demand for it on the part of their customers in turn, and they think we are negligent and don't have much respect for our ability, in view of the name and reputation we have enjoyed over the years for not being able to supply them with such a machine which they consider is the only thing we lack.

Q. We have in evidence here some reports of your company.

The Court: May we have the reports.

Mr. Klots: The annual report for 1957.

The Court: I think there were one or two of them, as I recall.

Q. Is this a report of your company for the year 1957, Defendant's Exhibit 170?

A. 1957 is the cover of it.

Q. Is the interior?

A. Yes.

Q. Are the statements in that report, of your own knowledge, true, particularly the statements as to your discontinu-

[fol. 1977] ance of manufacturing machines in the United States?

A. Yes, to the best of my knowledge.

Q. Was there a constant falling-off of the White sales in the past ten years?

A. Yes.

Q. Did that constant falling-off take place prior to the introduction of the built-in multiple-cam machine-carried sewing machines?

A. Well, that falling-off was naturally affected by the imports generally.

Q. I did not ask you that question.

A. I didn't understand it then, Judge.

Q. I said, did your sales fall off for a period prior to the introduction into the market of machine-carried multiple-cam sewing machines?

A. Yes.

Q. All right. You import all your machines now?

A. That's right.

Q. And they are manufactured abroad for you and brought in under the White label or name?

A. That's right.

Q. And where is your present source of supply?

A. You mean in Japan?

[fol. 1978] Q. I don't know where it is.

A. Yes, Japan exclusively now, right now, yes.

Q. And was there any other source of supply outside the United States prior to the time when it became exclusively Japanese?

A. Yes.

Mr. Elkins: I beg your pardon. I did not hear that.

The Court: Was there any other source of supply prior to the time that it became entirely Japanese? And the witness said yes.

Q. What was the other source of supply?

A. Germany.

Q. Where did you have your machines made there, in what company?

A. Gritzner-Kayser.

Q. Do they make a machine-carried multi-cam machine?

Mr. Elkins: If your Honor please, I wanted to go on with the direct examination——

The Court: I am going to permit you to do that. I simply want to follow along this thought while it is in my mind.

Mr. Elkins: All right.

A. I presume they do, your Honor. They were making [fol. 1979] one.

Q. Did you ever import any machine-carried multi-cam machines made by Gritzner-Kayser to meet the demand of your customers?

A. No.

The Court: I see. All right, you may continue.

By Mr. Elkins:

Q. Has the fact that you do not have a built-in cam machine cost you any business, sir?

A. Well, we naturally think it does, obviously, because many of these dealers tell us that they are forced to have one and feel that they have given us sufficient time to produce it, so they do buy competitive lines to fill in what they call a complete line, and in that process there are certain suppliers that they buy from who also offer parts of the complete line, at least that we sell, which they feel they should buy.

We have had all sorts of reports that in order to insure their supply, for one, they feel they had better buy others, or whether it is just a cooperative expression on their part, but we feel that certain machines we might be selling are affected by the absence of this other one.

Mr. Klots: I move to strike out the answer as purely [fols. 1980-1981] speculative, if your Honor please.

The Court: We will let it stand. You may cross-examine as to it. The motion is denied.

By Mr. Elkins:

Q. Do you find, sir, that some of your customers have in stock a built-in cam machine?

A. Yes.

Q. And that, of course, is not a machine sold to them by White.

A. Correct.

Q. Do they have in stock other types of sewing machines

made by the same manufacturer of the built-in cam machine that they do have in stock?

A. In some instances.

Q. You spoke of the retailers referring to a complete line, sir. Can you tell us what your retailers consider to be a complete line of household sewing machines?

A. Well, they consider a complete line to be—they are quite satisfied with our line as being practically complete, with the absence of one machine or one model which is the built-in cam automatic.

* * * * * * * *

[fols. 1982-1985] Q. Does the White straight stitch machine take an attachment for a zigzag, sir?

A. Yes, it does.

* * * * * * * *

[fol. 1986] Afternoon Session 3 P.M.

Dodge E. Barnum resumed.

Mr. Elkins: I have a few more questions before cross starts, your Honor.

The Court: All right.

Direct examination continued.

By Mr. Elkins:

Q. Mr. Barnum, White sells a manually operated zigzag machine, does it?

A. Yes.

Q. And are you acquainted with that machine? Are you acquainted with it?

A. Oh, yes.

Q. Have you demonstrated it?

A. Yes, I have demonstrated it.

Q. And in demonstrating it, why, you have used it to make the zigzag stitches?

A. Yes.

Q. How does that compare, sir, with a machine that automatically produces the stitch through the operation of cams?

Mr. Pettit: Your Honor, I object to that question unless he explains in what manner he is talking about—in what respect, weight, height, color, operation?

[fol. 1987] Q. I am referring to the facility of the operation, having in mind the ease with which the stitch can be made and also the time required to make the stitch.

A. You are speaking of so-called embroidery designs or decorative stitching?

Q. Yes.

A. Well, there is really no comparison. For me this is a very difficult operation and requires—to be good at it requires considerable practice and skill and sense of timing.

Q. And you are speaking of the zigzag machine that produces the ornamental stitch by manual operation?

A. Right.

Mr. Elkins: That is all, sir.

Cross-examination.

By Mr. Pettit:

Q. Mr. Barnum, have you ever sought—and by you I mean White—ever sought to buy any built-in multi-cam machine?

A. Yes, we have.

Q. From Vigorelli of Italy?

A. I don't believe so—at least to my knowledge, I don't recall that name.

Q. Have you ever sought to buy any from Bernina—[fol. 1988] Gegauf, known as Bernina, in Switzerland?

A. I don't believe so; not to my recollection.

Q. Have you ever sought to buy any from Messerschmitt in Germany?

A. I think not.

Q. Borletti in Italy?

A. We have looked at Borletti and considered it.

Q. But you have not talked with them?

A. No.

Q. Have you ever sought to buy from Koyo Seiki Japan? I am just asking you if you sought to buy it?

A. Well, we have consulted——

Q. Just answer my question. Have you consulted with them in order to buy it? Did you ask them to sell the machine to you?

A. No, we didn't ask them to sell us a machine.

Q. Have you ever asked the Feather Company of Japan to either manufacture for you or to sell to you multi-cam machines?

A. I don't know.

[fol. 1989] Q. You go to Japan quite regularly, do you not?

A. I have made three trips.

Q. You deal there with Japanese manufacturers?

A. Not deal with them.

Q. Talk to them?

A. Talk with them. In the sense of buying, though, we only buy from trading concerns.

Q. You buy from trading concerns. But you have complete charge of dealing with and arranging for the type of machine you want, the specifications of it, the features that the machine has?

A. Correct.

Q. In connection with that, you talk with your suppliers, the manufacturers of these machines.

A. Correct.

Q. You tell them the features you want; you bargain with them as to the price that is involved with respect to each of the particular features?

A. With the trading firms.

Q. With the what?

A. With the trading firms. We don't discuss any prices with factories because we don't buy directly from them.

Q. Then you do your talking with the trading firms?

[fol. 1990] A. Yes, sir.

Q. And you eliminate a feature if it seems too expensive for what it offers, from time to time, do you not?

A. Well, I don't—not as a feature. If it is a feature that is fundamental to our search. I don't know of any instance we have eliminated one.

Q. You have never said that you wouldn't take a feature in a sewing machine because the cost of that particular feature was too much?

A. As a feature, not to my knowledge.

Q. What do you mean "as a feature"?

A. Well, maybe I can best explain it this way. We have asked for a different type bobbin winder, for instance, than might be on this machine, or we have asked for a different type or position of the light that goes into the machine.

Q. If that cost is so much that you think it is out of proportion for what it has, you don't take it, do you?

A. Well——

Q. That is a rather simple question.

The Court: Don't argue with the witness, Mr. Pettit.

[fol. 1991] A. We wouldn't take it if we thought that this cost was out of line.

Q. Are you testifying that in your experience you have never found any single feature that you thought cost too much for what it added to the machine?

A. No. There has been an occasion when we did think so. A feature, however, that was offered us, not one that we sought.

By the Court:

Q. Does the White company seek to import or market a machine that reaches a definite purchase bracket group?

A. In some instances.

Q. Is that purchase bracket group that the White company tries to reach—does it concentrate its business activities on that one purchase bracket group, or do you try to have a range in price from a cheap machine to a very expensive machine?

A. That's our endeavor.

Q. And the cost to the retailer or consumer has never kept you from going into a particular machine?

A. I'd say that in a couple of instances cost has discouraged us from giving some serious consideration to some specific machine.

[fol. 1992] Q. What I have in mind is this. I hope you don't mind; I want to get this straightened out in my own mind.

Mr. Pettit: Very glad to have you do that.

Q. You people are essentially, in essence, distributors, are you not?

A. Correct.

Q. And you pay dollars upon delivery, don't you?

A. Correct.

Q. And you have a substantial amount invested in inventory which is not of your own manufacture?

A. That's correct.

Q. And unless that inventory is moved several times a year, you don't show a profit?

A. Right.

Q. Do you try, as a result of that, to concentrate upon a fast-moving bracket so that you won't have an expensive inventory laying around which is slow-moving?

A. Well, we try, but maybe I can explain it this way——

Q. You explain it any way you want to.

A. I think I can get this point clear.

Q. I want you to understand what I have in mind.

You are not a manufacturer today, and there is no way [fol. 1993] that you can, week-to-week, control your output or your purchases in proportion to your sales, is there?

A. Correct. That's right.

Q. You have to give your orders months in advance?

A. Right.

Q. For instance, how long does it take for you to get an order delivered after you place it?

A. Approximately six months.

Q. Six months. And during that six months there are potentials of market changes, of consumer demands?

A. That's right.

Q. Does that fact influence your company to the extent that it confines you to a certain bracket purchase group that you can rely upon with greater faith to be a constant buyer, to take up your inventory, rather than getting into the expensive machines which might have greater fluctuation in times of economic pressure? Does that influence your company in its buying and the type of machine it buys?

A. Well, within an area, your Honor, it does. As I was going to explain——

Q. You explain it now in your own way. You see what is bothering me? Let me be very frank with you because I want to be, and I want to get your reaction.

[fol. 1994] You had available to you zigzag machines from your former German supplier. You did not buy them.

A. That's right.

Q. You have available to you now certain zigzag multicam machines in your Japanese market.

A. Right.

Q. You have not bought them. You say that your customers have asked you about them. I am concerned with this; why haven't you bought them to meet this demand that you say exists? What is your reason for it?

A. Well, in order——

Q. That is what is bothering me.

A. In order of your questions, your Honor, the German machine, which was offered us, was not rejected strictly on the strength of the price of it, that we might have to pay, but it was in a lot of respects very similar to a machine we had imported from Germany for two or three years with which we had too much service trouble. It was too sensitive, it was too difficult for the average housewife to use successfully without constant help from the dealer, to which they objected because they don't like to keep making so many service calls or see the machine back so many times, and there were enough of the principles of that type machine with which we [fol. 1995] had two or three years experience involved in the further development of it with so-called built-in cams that that was just as much an influencing factor in that particular situation as the price was, although I do not deny that price was a consideration.

But in practically every model we offer our dealers—we have three: we have what is termed in our sales approach a promotional or a so-called price leader line of machines. One step above that we have what we call a de luxe line. Then a step above that we have a custom line. These are offered to cover the scope of operations of the various types of dealers we have, some who operate without the benefit of much newspaper or sales type advertising, others who rely upon that to attract traffic. So in practically every classification we have straight stitch, manually controlled zigzag or cam operated machines. We will usually have in our line three different models, ascending in price as we go up the scale.

By Mr. Pettit:

Q. You have three different models today, do you not, straight stitch, manually operated, and replaceable cam automatic?

A. That's correct. But, I mean, we have three models of [fol. 1995a] each of those machines, too, in most instances, in three different price categories.

[fol. 1996] Q. Among the various manufacturers who supplied you or manufactured machines that you sell, there are Aichi Kogyo; isn't that one of them?

A. Oh, Aichi Kogyo.

Q. Nishizawa?

A. Formerly.

Q. What did you say?

A. Formerly.

Q. Formerly.

A. Currently we are not getting any.

Q. But you did buy from them?

A. Yes.

Q. And Fuji?

A. Correct.

Q. And Janome?

A. Yes.

Q. And Hosei?

A. Yes.

Q. Janome is one of the biggest manufacturers in Japan?

A. Yes.

Q. You sell, as you said, a manually operated machine, and you represent that machine to be adequate for the purpose for which it is built and sold, do you not?

[fol. 1997] A. In that area, yes.

Q. Well, that area includes practically all forms of ornamental zigzag stitching. You just distinguish between the decorative and embroidery, but the normal zigzag stitch is performed perfectly, functionally by your manually controlled machine, is it not?

A. If it is controlled effectively.

Q. Well, controlled by the means that you put on it?

A. Well, a manual——

Q. No, I am not speaking of the manual operation. I am speaking of——

A. Then I understood you. I thought you were talking about——

Q. There is a functional zigzag stitch that operates automatically on your zigzag machine—you do not have to do anything; you just set it?

A. That is correct, as to width.

Q. And it performs all the functional stitches that could be seen on a zigzag machine—and by "functional" I am distinguishing between the decorative and the embroidery.

A. It is a basic zigzag stitch in various widths.

[fol. 1998] Q. You do not tell anybody that there is anything wrong with it or that it won't perform the basic zigzag stitch?

A. Oh, no.

Mr. Elkins: I object to what they don't tell their customers.

The Court: The objection is overruled.

Q. You also represent that machine by the use of manual levers can perform certain decorative and embroidery stitches?

A. Quite right.

Q. And the degree to which it can be used successfully or skillfully will depend, of course, upon the dexterity or skill of the person operating it?

A. Yes.

Q. You also sell a replaceable cam, as you call it—a replaceable cam automatic—that is the phrase you used for it?

A. Yes.

Q. That will perform once the cam is in it—that will perform the same stitch just as efficiently and just as well as that same cam in a multi-cam machine, will it?

A. Yes, I would think so.

[fol. 1999] Q. Now in 1957 you sold a multi-cam machine known as the White 666, did you not?

A. Yes.

Q. I think you furnished information to the government which shows that the company imported 1400 of those machines in the year 1957. You have discontinued the sale of that machine, is that correct?

A. Yes.

Q. Is that the machine that you were referring to when you were answering his Honor's question a moment ago?

A. On the subject of——

Q. Of its operation?

A. The one that I referred to as having difficulty?

Q. Where you had difficulty.

A. Yes.

Q. That is the one that you testified you were having some difficulty in repairing it?

A. Yes.

Q. Is that the only built-in multi-cam machine that you have dealt with or had experience with?

A. Yes.

Q. Well, some of your dealers do deal in multi-cam ma-
[fol. 2000] chines, you said, and buy them elsewhere?

A. Yes.

Q. Have you not heard that it is generally assumed, accepted and recognized that the service requirements of a built-in multi-cam machine are greater than the requirements of, for instance, a straight stitch sewing machine?

A. In general.

The Court: Did I understand your testimony before that the German-made machine requires more service than, for instance, the Japanese-made machine?

The Witness: In that particular experience, your Honor.

Mr. Pettit: I am sorry, your Honor, but I did not hear that.

The Court: I inquired as to the witness' testimony that the German-built machine requires more service than the Japanese machine to which they switched.

Mr. Pettit: I haven't understood that they switched to a multi-cam machine.

The Court: I said a Japanese-made machine.

Mr. Pettit: Oh!

The Court: We were talking about German manufactures.
[fol. 2001] The Witness: That is right.

The Court: I was always of the belief that a German-made machine was perfection in itself—in fact, that was a household statement.

Q. When you are comparing the services of the machine you now buy, you are comparing the service of a built-in cam machine with the service of a straight stitch or replaceable cam or manually operated machine?

A. That is right.

Q. Now you testified this morning in answer to the following question:

"Q. Did you ever import any machine-carried multi-cam machines made by Gritzner-Kayser to meet the demand of your customers?

"A. No."

That is correct, is it?

A. Well, we never regarded that as a multiple-cam machine.

Q. Were you answering that you hadn't imported it or were you telling counsel that it wasn't a multi-cam machine, built-in? He asked you——

The Court: I asked it.

A. Well, on the basis of multiple-cam, that is what I understood—that is the way I understood the question. We [fol. 2002] did not consider that a multiple-cam machine.

Q. How many cams did it have?

A. One, basic.

Q. How many others did it have that weren't basic?

A. Well, these were more or less endless. These were more or less inserted.

Q. Are you speaking of the Gritzner-Kayser?

A. Gritzner-Kayser—one cam in it could be adjusted to do a plain zigzag stitch or what we chose to call the serpentine. I don't know what the technical description of that stitch would be, but they were both, as we say, single line stitches, no embroidery effects.

Q. The same shaft that carry that cam carried additional cams?

A. On top, that is right.

Q. How many additional cams?

A. Just one at a time, which carried two more patterns.

Q. Now how did you answer my questions all the way through about multi-cam machines when you say you did not consider it a multi-cam machine?

A. Well, the fact that there was only one cam in it, and [fol. 2003] to get any embroidery effect or anything beyond the single line stitches we never regarded it as a multi-cam machine.

Q. Did you sell it as a multi-cam machine?

A. No, we had no description of that.

Q. Did you sell it as——

A. We sold it as an automatic because it was cam-operated.

Q. To you a cam-operated machine is automatic whether it has one cam or several cams?

A. That is the way we advertised them, yes.

Q. Now you have testified this morning that some of your customers buy multi-cam machines from other people and then will have in stock also machines made by the same manufacturer, is that correct?

A. That is correct.

Q. You do not have any exclusive contract, exclusive buying contract with these people, do you?

Mr. Elkins: I object. That is beside the question. The witness merely testified that he saw customers with the built-in cam of a competitor——

The Court: No, this is cross-examination. I am going to permit some latitude. This is cross-examination.

[fol. 2004] Q. Do you have an exclusive dealer contract with your customers?

A. Yes, we have some.

Q. Do you have some dealers that do not have?

A. Yes.

Q. And what proportion of the dealers are not under exclusive dealer contracts?

A. Oh, I would say possibly 20 or 25 per cent on that basis, and the majority otherwise.

Q. All the rest of them—75 per cent are restricted to buying White machines?

A. No, no, just the reverse.

Q. 75 per cent are unrestricted?

A. That is correct.

Q. But then all those 75 per cent, of course, are free to buy machines manufactured by anybody?

A. Well, the rest are, too.

Q. Are you a director of the company?

A. No, I am not.

Q. Have you been a director of the company?

A. Never.

Q. Do you know anything about their annual reports, quarterly reports to stockholders?

A. Well, I read them.

[fol. 2005] Q. You receive them?

A. I receive them.

Q. You are a stockholder?

A. That is right.

With the above in mind we are enclosing a draft of a proposed letter to Dr. Schwalb.

Yours very truly, The Singer Manufacturing Company, ——, ——, Patent Department.

Enclosure—

Draft of proposed letter.

CC: Mr. M. L. Waterman, New York, Mr. M. L. Waterman, Europe.

[fol. 3716] In United States District Court

Government's Exhibit 119

Proposed Letter

Dr. C. Schwalb,
Phoenix Nahmaschinen A.-G.,
Kleine Bahnhofstr. 3,
Bielefeld, West Germany.

Dear Dr. Schwalb:

This will acknowledge receipt of your letter of March 9 relative to the action we have taken with the Tariff Commission in Washington.

We are not informed as to any right you may have under our United States patent of Gegauf No. 2,832,302 which is now before the Tariff Commission. The application for this patent was acquired by Singer in good faith and before its acquisition an exhaustive examination was made which included records in the Patent Office in Washington and we found no licenses or assignments adversely affecting our title.

This week the Tariff Commission decided to institute a formal investigation and has set hearings for May 5, 1959. Under the circumstances I think it best for all concerned not to enter into a discussion of this matter until after final hearings by the Commission have been concluded.

Yours very truly, ——, ——.

[fol. 3717] IN UNITED STATES DISTRICT COURT

GOVERNMENT'S EXHIBIT 120

Received Patent Department, April 6, 1959, Answered —.

April 3, 1959.

Dr. Carl Schwalb
Phoenix Nahmaschinen A.G.
Kleine Bahnhofstr. 3
Bielefeld, Western Germany

Dear Dr. Schwalb:

This will acknowledge receipt of your letter of March 9 relative to the action we have taken with the Tariff Commission in Washington.

We are not informed as to any right you may have under our United States patent of Gegauf No. 2,832,302 which is now before the Tariff Commission. The application for this patent was acquired by Singer in good faith and before its acquisition an exhaustive examination was made which included records in the Patent Office in Washington and we found no licenses or assignments adversely affecting our title.

As you no doubt have been advised, the Tariff Commission has decided to institute a formal investigation and has set hearings for May 5, 1959. Under the circumstances, while this matter is pending before the Commission, I think it best for all concerned not to enter into discussions of this matter until after final hearings by the Commission have been concluded.

Yours very truly, Donald P. Kircher, President.

Copy to Mr. M. L. Waterman, Mr. J. G. Stanford.

[fol. 3718] IN UNITED STATES DISTRICT COURT

GOVERNMENT'S EXHIBIT 121

Received Patent Department, January 6, 1958, Answered—.

Dériaz, Kirker & Cie
Genève
Rue Du Mont-Blanc 14

Bureau D'Ingénieurs-Conseils En Propriété Industrielle
Mr. J. G. Stanford,
The Singer Manufacturing Co.,
Patent Department,
Elizabethport F.,
New Jersey, U.S.A.

26th December, 1957.

Dear Mr. Stanford,

re: Gegauf's U.S.A. patent application Serial No. 700 079 of the 2nd December, 1957 (division)

We have just received the original and a copy of the assignment executed by Mr. Gegauf on the 23rd December, 1957, in Zurich, and concerning U.S. patent application Serial No. 700.079 of the 2nd December, 1957.

Mr. Gegauf would appreciate that, in view of the prosecution in certain European countries, the publication of the basic U.S. patent application Serial No. 358,377 be delayed as much as possible. Mr. Willi wrote to us that, as far as you have no contrary important reason, his client would like to ask you to pay the final fee at the end of the term, in order to delay publication of the patent.

Yours faithfully, Deriaz, Kirker & Cie, G. E. Kirker.

Enclosures (sep.)air mail and reg.

1 assignment with dupl.

[fols. 3719-3720] IN UNITED STATES DISTRICT COURT

GOVERNMENT'S EXHIBIT 122

air mail

January 6, 1958.

Mr. G. Kirker,
Deriaz, Kirker & Cie,
Rue Du Mont-Blanc 14,
Geneva, Switzerland.

Dear Mr. Kirker:

Gegauf's U.S.A. patent Application Serial No. 700,079 of December 2, 1957 (Division).

Thank you for your letter of December 26, 1957, K/JP, enclosing the original and copy of the assignment executed by Mr. Gegauf on De nber 23, 1957.

We do not know at this ime whether we can comply with Mr. Gegauf's request that the publication of United States Gegauf application Serial No. 358,377 be delayed as much as possible. In any event, we shall advise you in the near future as to the action we propose to take in this matter. In this connection we might mention that there is nothing disclosed in United States application Serial No. 358,377 that has not already been published in the Gegauf Italian patent No. 501,172 and in Gegauf Swiss. patent No. 318,123.

Yours very truly, The Singer Manufacturing Company, ——, ——, Patent Department.

CC: Mr. M. L. Waterman.

[fol. 3721] IN UNITED STATES DISTRICT COURT

GOVERNMENT'S EXHIBIT 124

Received Patent Department, January 20, 1958,
Answered January 21, 1958.

Dériaz, Kirker & Cie
Bureau D'Ingénieurs-Conseils En Propriété Industrielle
Fondé En 1877 Par
E. Imer-Schneider

air mail

Mr. J. G. Stanford,
The Singer Manufacturing Co.,
Patent Department,
Elizabethport F.,
New Jersey, U.S.A.

17th January, 1958.

Dear Mr. Stanford,

Referring to your letter of the 6th inst., we would give you the following information we have obtained on the telephone, from Mr. Willi, of Blum & Co. attorneys of Gegauf.

The reason why they would like to postpone as much as possible the issuance of the U.S. patent deriving from Serial No. 358,377 is the following:

For the corresponding application in Germany, there are opposition proceedings in Germany. The discussion with the German Examiner is not yet completed and one of the prior art found in America has not been cited, either during the examination as to novelty or during the opposition proceedings in Germany. If the U.S. Patent issues shortly, it is to be feared that the German Examiner sees this patent and notices the list of prior art cited in America, and which will be indicated at the end of the U.S. patent. Then the German Examiner will be able to pick up certain U.S. patent which is particularly dangerous for Gegauf and, consequently, he might raise further difficulties and possibly refuse the patent. We do not know exactly which

is said U.S. patent, but Mr. Willy has given us the name on the telephone.

As the question of opposition in Germany will be settled probably within one or two months, and since the term for paying the final fee will not expire before May next, we hope you will be in a position to take Mr. Gegauf's request into account, in order that he gets in Germany the broadest possible claims. It seems that Singer has a certain interest in so doing, i.e. that Gegauf obtains broad claims in Germany for said case.

We are requesting Mr. Willi to let us know immediately as soon as the matter is settled in Germany.

Yours very truly, Deriaz, Kirker & Cie, G. E. Kirker.

[fol. 3722] IN UNITED STATES DISTRICT COURT

GOVERNMENT'S EXHIBIT 125

January 21, 1958.

Mr. G. Kirker:
Deriaz, Kirker & Cie,
Rue Du Mont-Blanc 14,
Geneva, Switzerland.

Dear Mr. Kirker:

Gegauf's United States Patent Application Serial No. 700,079 of December 2, 1957 (Division).

We have received your letter of January 17, 1958 advising us why Mr. Willi of Blum & Co., attorneys for Gegauf, wishes us to postpone as long as possible the issuance of the United States patent deriving from United States Serial No. 358,377.

We do not expect to have the subject United States patent issued within the immediate future but circumstances may require us to have it issued before next May. In any event, if we do find it necessary to issue this patent before next May we shall advise you accordingly. At the same time we would be pleased if you would have Mr. Willi tell us as soon as the German matter is settled.

We would also like to know as soon as possible the

number of the United States patent, which Mr. Willi believes is dangerous with respect to the German Gegauf patent application.

Yours very truly, The Singer Manufacturing Company, ——, ——, Patent Department.

CC: Mr. M. L. Waterman.

[fols. 3723-3724] IN UNITED STATES DISTRICT COURT

GOVERNMENT'S EXHIBIT 126

air mail

January 30, 1958.

Mr. M. L. Waterman,
Singer Nahmaschine Co. A.-G.,
Badenerstrasse 41,
Zurich, Switzerland.

Dear Mr. Waterman:

I am sure that you will be pleased to know that the Patent Office has now finally agreed to the amendment of the Gegauf patent application. This puts us in a position to pay the final fee and have the patent issue to the Singer Company in about 6 weeks time. Yesterday I called Mr. Kircher and gave him this information and at the same time called attention to Mr. Gegauf's request that the final fee not be paid until a later date and recommended that, due to circumstances that exist at the present time, Mr. Gegauf's request be respected. Mr. Kircher readily agreed that the final fee should not be paid at this time.

. . . . . .

[fols. 3725-3728] IN UNITED STATES DISTRICT COURT

GOVERNMENT'S EXHIBIT 127

February 18, 1958.

Mr. G. Kirker,
Deriaz, Kirker & Cie,
Rue Du Mont-Blanc 14,
Geneva, Switzerland.

Dear Mr. Kirker:

Gegauf United States Patent Application Serial No. 358,377 Filed May 29, 1953.

In order for us properly to exploit our United States patent rights it appears necessary for us to issue the above application as a patent as soon as possible. We are particularly desirous of asserting several of our United States patents against the importers into the United States of Japanese-made multi-cam ornamental stitch machines.

It is highly desirable that the Gegauf patent application be issued promptly and, therefore, we would like to pay the final fee on or before February 28, 1958 in which event a patent should issue on or about April 18, 1958. This is only two weeks before May 1, the date mentioned by Mr. Willi.

In the event that Mr. Willi should have a strong and valid objection with respect to our proposed action please cable us accordingly.

Yours very truly, The Singer Manufacturing Company, ——, ——, Patent Department.

CC: Mr. D. P. Kircher, Mr. M. L. Waterman.

[fol. 3729] IN UNITED STATES DISTRICT COURT

GOVENRMENT'S EXHIBIT 130

Received Patent Department, May 28, 1959, Answered—.

The Singer Manufacturing Co.
Singer Building
149 Broadway
New York 6, N. Y.

May 27, 1959.

In Replying Please Refer to MLW:V3

F. Gegauf, Esq.
Fritz Gegauf Aktiengesellschaft
Bernina Nahmaschinenfabrik
Steckborn, Switzerland

Dear Mr. Gegauf:

As we previously advised you, we have instituted a proceeding before the United States Tariff Commission in an endeavor to prevent the importation into the United States of all non-licensed sewing machines which would infringe our Gegauf Patent No. 2,832,302. During a recent hearing before the Tariff Commission, Singer was asked by the Commissioners if Pfaff of Germany was licensed under Gegauf Patent No. 2,832,302 so that it could freely export infringing machines to the United States.

We advised the Commissioners that Pfaff had no such license, and it was not contemplated that such a license would be extended to Pfaff. However, in view of Paragraph (3) of the Singer-Gegauf agreement of December 5, 1957, our answer to the Commissioners was perhaps not too convincing.

We believe that the only way in which we can properly convince the Commissioners as to Pfaff's position in this matter is to revise Paragraph (3) of our agreement of December 5, 1957. Frankly, we think that such a revision of the agreement is quite necessary in order that we may have a better chance of prevailing before the Tariff Com-

mission. We hope that you will have no objection to deleting Pfaff's name from our agreement.

It is our suggestion that this matter could be most expeditiously handled by executing an agreement between Singer and yourself which would have the effect of deleting all mention of Pfaff. Such an agreement is enclosed in duplicate; and, if you believe that this new agreement is in proper order, we would be pleased if you would execute it in duplicate and return one of the copies to us so that we may convince the United States Tariff Commission as to Pfaff's position in the present matter.

[fols. 3730-3732] We would deeply appreciate any attention which you can give to this matter and, particularly, since time is a very important element.

Very truly yours, M. L. Waterman, Vice President.

Enclosure

cc: Mr. J. G. Stanford (not noted on original).

[fols. 3733-3735] IN UNITED STATES DISTRICT COURT

GOVERNMENT'S EXHIBIT 132

Fritz Gegauf Limited
Steckborn (Switzerland)
Sewing Machine Manufacturers

Steckborn, June 10th, 1959.

The Singer Manufacturing Co.
Singer Building
149 Broadway
New York 6, N. Y., U.S.A.

Dear Sirs:

We acknowledge receipt of your letter of May 27th, to which was given our best attention. As we are in no close connection whatsoever with Pfaff, we are in principal ready to conclude a new agreement with you in which all mention of Pfaff is deleted.

On this occasion we advise you that on April 5th, 1955, we have executed an agreement with Phoenix, photostatic

copy of which is enclosed. We did not mention this agreement in our negotiations with you time ago, because we were and still are of the opinion that the agreement with Phoenix refers exclusively to our German application G II 654 and thus is solely and exclusively valid for the West German territory only.

Since the agreement between Bernina and Phoenix dated April 5th, 1955, was not mentioned in our agreement with you of December 5th, 1957, because of the reasons outlined above, we suggest that, in order to avoid any claims for compensation of damages Phoenix might put against us, the mention of Pfaff is deleted in the new agreement, but substituted by the mention of Phoenix.

Should our agreement with Phoenix not be considered a sufficient reason for such a substitution by the Tariff Commission, or should yourself because of other reasons not be interested to introduce the mention of Phoenix in the agreement to be newly concluded between us, we then agree not to mention both Pfaff and Phoenix under the explicit condition that you assume to their full extent all consequences that might fall on us on account of our agreement with Phoenix from April 5th, 1955.

We look forward to your comment and remain with kind regards,

sincerely yours, Fritz Gegauf Limited, F. Gegauf.

enc.

[fol. 3736] IN UNITED STATES DISTRICT COURT

GOVERNMENT'S EXHIBIT 133

Received Patent Department, June 22, 1959, Answered —.

Dériaz, Kirker & Cie
Bureau D'Ingénieurs-Conseils En Propriété Industrielle
Fondé En 1877 Par
E. Imer-Schneider

Air Mail

Mr. J. G. Stanford,
Patent Department,
The Singer Manufacturing Company,
Elizabethport F., New Jersey

June 17, 1959.

Confidential.

Dear Mr. Stanford,

Re: Agreement with Bernina

Referring to Mr. Waterman's cable of the 9th instant and to your today's telephone call, please find below a résumé of the interview the writer had on the 15th instant in Zurich with Mr. Gegauf, his daughter, his son and Mr. Willy.

Bernina is willing to help you as much as possible in your fight in the U.S.A.

Bernina wrote you recently about a difficulty which arose with Phoenix. You have received a copy of their agreement with Phoenix. The writer has read the agreement and is of the opinion that it concerns Germany only and not to any foreign country. The argumenfs in favour of this opinion are as follows:

1) German patent applications only are mentioned in agreement;
2) At the time of signature of the agreement, patent applications were already filed in other countries for the Bernina invention referred to in the agreement;

3) It is a general rule that the abandonment of a right cannot be presumed but must be expressly stated. In the present case, giving to Phoenix the right to use the invention abroad would mean the abandonment of a part of the rights of Gegauf, and such abandonment should have been expressly men- [fol. 3737] tioned in the agreement, if such had been the intention of the parties. Assuming that such abandonment exists, as Phoenix do presently, is not in agreement with the fundamental rules.

Nevertheless Mr. Gegauf senior would not risk a litigation with Phoenix, even if there were 90 or 99% chances in his favour.

After we had this discussion, we reached the three following proposals:

1. The agreement between Bernina and Singer remains without any change and Mr. Gegauf prepares an Affidavit for the Tariff Commission in which he explains why he asked, at the time of signature of the agreement, that Pfaff be excluded from the agreement.

   Should this proposal enable you to remove the difficulties you have with the Tariff Commission, Mr. Gegauf would agree to prepare and give this Affidavit provided Singer agree to cover Bernina against the risk of possible legal action by Phoenix on the basis of the agreement of May 5, 1955. A letter from Singer to Bernina would be sufficient in this respect.
2. The agreement is replaced by the one recently proposed by Singer, which no longer mentions Pfaff. Mr. Gegauf can, in addition, supply you with an Affidavit as suggested in the preceding paragraph 1. As a counterpart Singer would have to cover Bernina against Phoenix, as indicated under 1. above.
3. The agreement is replaced by another one in which the name Phoenix is substituted for Pfaff. In this case Mr. Gegauf could prepare and send you an Affidavit explaining:

   (a) why he asked, at the time of signature of the agreement, that Pfaff be excluded from the agreement;

(b) why he now asks that Phoenix be introduced in lieu of Pfaff.

Remark. Since 1955 Phoenix has merged with Anker. In the case of the third proposal the present name of the company after merger would have to be given in the agreement.

[fols. 3738-3742] During the conversation we had today over the telephone, it was very difficult to hear you because your voice was periodically interrupted. We understand that you agree with proposal No. 2. and that Singer will be prepared to address to Bernina a letter stating that in case Phoenix did institute legal proceedings against Bernina, claiming the right to use the invention not only in Germany but also abroad and particularly in the United States, you would assume the financial risk which Bernina would run in the matter. In other words, Singer would give Bernina the assurance that, should the latter have costs or damages to pay to Phoenix on the basis of the agreement of May 5, 1955, Singer would meet the costs.

Mr. Gegauf explained to us that in spite of his sincere wish to help Singer, he is not in a position to take the risk of denying Phoenix the right they claim.

The matter being urgent, we suggest that Singer should write to Bernina, as soon as possible, the requested letter, if they agree. In the meantime Mr. Gegauf will sign the agreement and send it to you immediately upon receipt of the letter covering his company against Phoenix.

Yours very truly, Deriaz, Kirker & Cie,
E. E. Kirker.

[fol. 3743] IN UNITED STATES DISTRICT COURT

GOVERNMENT'S EXHIBIT 136

July 14, 1959.

G. Kirker, Esq.,
Deriaz, Kirker & Cie.,
Rue du Mont-Blanc 14,
Geneva, Switzerland.

Dear Mr. Kirker:

Agreement with Bernina.

Thank you very much for your letter of June 17, 1959, K/los, advising us as to the results of the interview which you had on the 15th of June in Zurich with Mr. Gegauf, his daughter, and his son and Mr. Willi.

We were disturbed when we learned of the existence of agreement executed on May 5, 1955 between Gegauf and Phoenix. Mr. Gegauf never advised us of the existence of this agreement even though he was obligated to do so under the Singer-Gegauf agreement of April 14, 1956. Incidentally you may recall that it was Mr. Gegauf who inserted paragraph (6) in our April 14, 1956 agreement, which paragraph reads as follows:

> 6) All agreements already concluded by either party and concerning or having a connection with any of the above mentioned patents or patent applications must be communicated to the other party for approval before signature of the present agreement.

In a letter to us dated June 10, 1959, Mr. Gegauf in reference to the Gegauf-Phoenix agreement, stated that "we were and still are of the opinion that the agreement with Phoenix refers exclusively to our German application G.11,654 and thus is solely and exclusively valid for the West German territory only." We note from your letter to us of June 17, 1959 that you agree with Mr. Gegauf's interpretation of the Gegauf-Phoenix agreement.

Although we dislike Mr. Gegauf's attitude, particularly with respect to the Phoenix agreement, we presume that he is adamant about wishing Singer to assume any dam-

ages which may result if Phoenix should bring legal actions against Fritz Gegauf A.G. on the basis of the Gegauf-Phoenix agreement.

[fol. 3744] In view of this situation we are willing to settle this entire matter in accordance with paragraph (2) contained on page 2 of your above noted letter. In order to carry out our part of this we are enclosing an indemnification letter addressed to Mr. Gegauf and signed by our Vice-President and Director, Mr. Max L. Waterman. We trust that when you present this to Mr. Gegauf he will promptly execute the newly proposed Singer-Gegauf agreement as well as prepare the suggested affidavit. As mentioned in the enclosed letter, we would like to have the affidavit prepared in the English language and contain, inter alia, a definite statement that Fritz Gegauf has never extended to Phoenix any rights in and to the United States Gegauf patents Nos. 2,832,302 and 2,877,726.

We have sent Mr. Waterman's letter to you so that you may present it personally to Mr. Gegauf and thereby perhaps expedite this entire matter.

We thank you for any assistance which you can extend to us in connection with the above.

Yours very truly, The Singer Manufacturing Company, ——, ——, Patent Department.

Enclosure—

Letter

By Mr. Klots:

Q. Mrs. Hovsepian, I want to ask you this. Do you agree with this statement, if it should appear that Mr. Hugel testified——

A. Pardon?

Q. I am sorry. If it should appear that Mr. Hugel testified at the same Tariff Commission proceeding as follows, I want to ask you if you agree with this statement. He was asked by the Commissioner in charge:

> "Well, what this started out to be was—I was trying to find out whether one Japanese machine is competing with another Japanese machine."

Mr. Hugel, it appears, answered:

> "I think all machines compete with all machines."

[fol. 2049] Do you agree with that?

* * * * * * *

[fol. 2050] The Court: We are trying to find out what her idea of "compete" is, what her concept is. I think she has given a very good definition. She says articles compete when they "vie" for the market—is that right, in substance?

The Witness: That's right.

The Court: When they have the same common appeal to a buyer; is that right?

The Witness: Right.

Q. With that definition of "compete," do you agree with the statement that "All machines compete with all machines"?

A. Yes.

Q. Now you mentioned something about zigzag attachments to a straight stitch machine, that some women found it confusing.

[fol. 2051] Do you mean by that that it is necessary for the woman to guide the material more carefully than in a machine where the needle zigzags?

A. Correct, because the movement has the side-to-side movement and the back movement, and to guide it along the

line or wherever she wants to guide it—the two motions make it a little difficult to hold down.

Q. I see. In your line of machines that Brother International sells, you have a machine called the Flairmatic 190, do you not?

A. Correct.

Q. And you were with the company when that machine was first put on the market?

A. Yes.

Q. And that was in the last part of 1958, was it not?

A. Yes, 1958, 1959—yes, 1958-1959.

Q. Do you remember that when they first put that machine on the market they described it as "housewife engineered"? Do you remember that expression?

A. No, I do not.

Q. Well, I will show you this and perhaps this will refresh your recollection—I show you a page from the November 1958 issue of a magazine known as "Behind the Scenes." [fol. 2052] Do you know the magazine, "Behind the Scenes"?

A. Yes, I do.

Q. What is it?

A. A trade magazine.

Q. A trade magazine covering——

A. Sewing machines.

Q. —sewing machines?

A. Yes.

Q. I would like to show you this page and ask you if it refreshes your recollection——

Mr. Klots: First I will have it marked for identification.

Mr. Corcoran: May I have a copy of that?

(Document handed to Mr. Corcoran.)

(Marked Defendant's Exhibit 194 for identification.)

By Mr. Klots:

Q. Now if you will look at this article, Mrs. Hovsepian, and read the first paragraph or so (handing).

Does that refresh your recollection that this was described as "housewife engineered"?

Mr. Corcoran: Your Honor, may I ask a question here?

Have you ever seen this article——

[fol. 2053] The Court: No, not now, please. This is cross-examination, Mr. Corcoran.

A. Just the first paragraph?

Q. The second paragraph.

A. Yes.

Q. Do you remember that now?

A. Yes.

Q. You do remember it.

A. Yes, sir.

Q. Do you remember that the firm's decision to go into this type was the result of an extensive survey among housewives?

Mr. Corcoran: I object to that, your Honor. This witness has just seen this article.

Mr. Klots: Let her read it, let her take her time.

The Court: She is an intelligent lady.

A. Their promotional work is not part of my work, so we really don't know what survey they made.

Q. You don't know what survey they made?

A. No.

Q. I show you another one of these issues of "Behind the Scenes" for February-March 1959, and I show you an advertisement for a Brother machine which appears on page 7, [fol. 2054] and I ask you if that is an advertisement of the Flairmatic 190 that we have been talking about.

A. Yes.

Q. That is one. You recognize it?

A. Yes.

Mr. Klots: I offer it in evidence.

Mr. Corcoran: No objection.

(Received in evidence as Defendant's Exhibit 195.)

Q. I show you this, which is now Defendant's Exhibit 195, Mrs. Hovsepian, and if you will look down to the lefthand side, about the middle of the page, you will see in big letters, "The Most Want Selling Features!" Do you see that?

A. Yes.

Q. And at the bottom under that it says:

"Ultra-Simplified . . . Beautifully Designed . . . Sensationally Priced! It's All Machines in One! Instant . Straight Stitching! . Fancy Stitching! Automatic Designs! It's as simple as a straight stitcher . . . yet as versatile as the most advanced automatic!"

Do you see that?

A. Yes, sir.

[fol. 2055] Q. That was true, wasn't it? Everything said in there was true?

A. Well, I won't commit myself. What they say in advertising is not always so.

Q. What do you think it was? Is it so?

Mr. Corcoran: Your Honor, I object. She has already expressed her opinion. She has answered the question.

The Court. No. Overruled.

Do you accept that statement as being an accurate description of that machine? If not, point out what part you think is inaccurate.

The Witness: Where it says "automatic designs." It is not as automatic as that.

The Court: It is not as automatic as what?

The Witness: As—well, it is not complete——

The Court: Not as automatic as automatic?

The Witness: It is not completely automatic. Well, in the sense that we visualize automatic. It has to—automatic means to do by itself.

The Court: That's right. It goes by itself. There is no sewing machine at all that goes by itself, is there?

The Witness: That is, it forms a pattern, a design by [fol. 2056] itself.

The Court: With a minimum of human effort——

The Witness: Yes.

The Court: —does it do what it says it does?

By Mr. Klots:

Q. Do you think your company put out advertising that wasn't so?

A. Pardon?

Mr. Corcoran: I object, your Honor.

The Court: Wait. She hasn't answered the question. Therefore I will sustain an objection.

A. Well, I don't want to commit myself on that.

The Court: Well, now, wait a minute. You have already committed yourself as an expert.

The Witness: Yes.

The Court: You are called here——

The Witness: Well——

The Court: Wait a minute. Pay attention. All that anybody asks of you is your honest opinion as one who is an expert in this field. Now, do you accept that statement as being a true description of the machine depicted?

The Witness: Well, not entirely.

The Court: All right. What portion of it do you not [fol. 2057] accept as being entirely accurate?

The Witness: The——

The Court: Take your time.

The Witness: —statement, "automatic designs."

The Court: That is the only part?

The Witness: Yes.

The Court: The statement about it being capable of producing designs automatically.

By Mr. Klots:

Q. That is the only thing you take exception to?

The Court: Don't shake your head.

A. That's right, yes.

Q. Now, did you ever see a document like that before, that I now hand you?

A. Yes. Do you want me to read it?

Q. No.

A. These are news letters.

Q. These are your news letters?

A. Yes. We sent them to dealers.

Q. Yes. And this says "For further information, please contact R. G. Ehrlich"?

A. Ruth Ehrlich, our vice-president. She does the publicity.

[fols. 2058-2060] Q. And this is the type of thing she sends out to dealers, is it?

A. Yes.

Mr. Klots: I ask to have it marked for identification.

(Marked Defendant's Exhibit 196 for identification.)

A. (Continuing) Dealers and distributors.

Q. Now I show you this which has been marked Defendant's Exhibit 196 for identification and ask you if you recognize that as one of these news letters that were sent out in connection with this Brother Flairmatic machine that we have been talking about?

A. Well, I would have nothing to do with anything that goes out as far as publicity, but I do know that this type—this is the type of letterhead they used. But as a specific letter——

Q. Look at it and see if it doesn't refresh your recollection that that has to do with——

A. —I wouldn't know——

Mr. Corcoran: I object, your Honor. She already testified.

A. (Continuing) I wouldn't know when or why they sent it. I do know that they sent this type of letterhead.

. . . . . .

[fol. 2061] Mr. Klots: I call the Court's attention to the fact that Defendant's Exhibit 196, this news from Brother, is headed "Sewing machine with a built-in look." It starts out by saying "The American trend towards fingertip ease and built-in features in their major appliances makes itself highly evident in the new Brother Flairmatic sewing machine."

I am now going to skip down to the middle of the page where it says: "This automatic unit will sew hundreds of decorative stitches without attachments. Everything is built right in. This means that with simple ease the sewer can embroider, monogram, satin stitch, blind stitch, zigzag, and sew straight, forward or reverse."

By Mr. Klots:

Q. Now I ask you, Mrs. Hovsepian, the Brother Flairmatic machine is a manually operated zigzag machine, is it not?

A. Right.

Q. We were talking a little while ago about fully automatic machines, and you had a certain definition and I asked [fol. 2062] you if you knew that other people had other definitions. I show you this little pamphlet and ask you if you recognize this as a pamphlet issued by your company.

A. Right.

Q. You do?

A. Yes.

Mr. Klots: Have it marked for identification.

(Marked Defendant's Exhibit 197 for identification.)

* * * * * * *

[fol. 2063] By Mr. Klots:

Q. I call your attention to the fact, Mrs. Hovsepian, that in this pamphlet issued by Brother it advertises some different sewing machines, does it not?

A. That's right.

Q. And it advertises, among others, a machine called the Galaxie, Model 230. Do you notice that?

A. Yes.

Q. And it describes it, does it not, as a fully automatic streamliner for fancy or plain sewing?

A. That's right.

Q. And, if I am not wrong, the Galaxie is a replaceable cam machine, is it not?

A. That's right.

The Court: That is the portion with the pencil line underneath it, Mr. Corcoran. You can see that.

Mr. Corcoran: I am sorry, sir?

The Court: I say that is the portion with the pencil underscoring.

Mr. Klots: Oh, yes. Didn't I rub that out?

[fol. 2064] The Court: No, you don't have to rub that out. Leave it in there. It saves time. It calls attention to what is the important part of the exhibit.

By Mr. Klots:

Q. I show you this advertisement which appears in the Sunday News, apparently, of October 23, 1960, and ask you if you recognize that advertisement published of one of the Brother machines.

A. Yes, I recognize the ad.

Q. You recognize the ad?

A. That's right.

Q. What type of machine is that, so far as making zigzag stitches is concerned? Does that have a manual device or a replaceable cam device, zigzag attachment, or what? Built-in cams?

A. That is a new model that I am not familiar with. I wouldn't like to make a statement on it because I am not certain. I did not demonstrate or use this particular model.

Q. You cannot tell by looking at the picture of it?

A. I might be able to tell, but I am not certain.

Q. What does it look like?

A. It looks like a manual zigzag.

[fol. 2065] Mr. Corcoran: Your Honor, I object to that. She answered the question.

The Court: She has answered it now. She is an expert and she is giving her expert opinion. She is giving her expert opinion. She says it looks like—what type of machine?

The Witness: Manual zigzag.

The Court: Would that be your opinion of the type machine this is?

The Witness: It appears so. I am not certain because I did not use it myself.

. . . . . .

[fol. 2066] Mr. Klots: It states: "Monograms, darns and mends, makes buttonholes, zigzag seams, overcasts, sews on buttons, embroiders, and straight stitching."

. . . . . .

Q. Mrs. Hovsepian, did you, within the last few months, apply for a position with the Singer Sewing Machine Company?

A. Yes, I did.

Mr. Corcoran: I object to that, your Honor.

The Court: Overruled.

Mr. Corcoran: I don't see—I am sorry.

The Court: It is clearly proper cross-examination. It may bear upon her credibility and her bias.

Q. And they didn't have a job for you?

[fol. 2067] A. Well, for the type of position I wanted they didn't have an opening at the time.

The Court: If she got the job, she wouldn't be here as a witness.

Mr. Corcoran: I guess not.

Mr. Klots: I have no further questions.

Mr. Corcoran: Your Honor, I think the witness has testified and would have testified whether she got the job or not.

The Court: She didn't get the job.

* * * * * * * *

[fols. 2068-2070] The Court: About five months ago, she said, she applied to Singer for a job.

Q. Was that while you were working with Brother that you went over there? Are you still working with Brother?

A. I still work for Brother.

Q. On a regular salary?

A. Not full-time, no, sir.

Q. Just what is your arrangement with them now?

A. About one or two days a week and whenever they need me.

Q. Just by special request?

A. Yes. Well, I go in one day a week, and if there are inquiries, letters that require my attention——

Q. And then, when there is a special job like an exhibit or a meeting?

A. A special show, that's right.

Q. Then you are hired for that specially?

A. Yes.

The Court: I see. All right.

* * * * * * * *

[fol. 2071] By Mr. Corcoran:

Q. Mrs. Hovsepian, I show you Defendant's Exhibit 142 and ask you to examine the decorative stitch on the jacket of this dress and on the pocket.

A. Yes.

Q. Could that stitch be made with a needle and thread?

A. Yes, by an expert embroiderer.

Mr. Corcoran: That is all.

By the Court:

Q. It would be quite a job, would it not?

A. Yes.

Q. It would require quite a skilful person?

A. Yes, very skilful.

Q. That is the kind of embroidery we used to get before they had the zigzag machines that you speak of, when everything was done by hand.

A. Yes, very fine.

Q. The Philippine and Madeira work and Italian work, and there were some American wives who used to be able to do it.

A. Yes, they did sew in those days.

* * * * * * *

[fol. 2072] Julius Margulies, called as a witness on behalf of the government, having first been duly sworn, testified as follows:

Direct examination.

By Mr. Elkins:

Q. Where do you reside, Mr. Margulies?

A. 66-12 102nd Street in Forest Hills, New York.

Q. Where are you employed, sir?

A. I am employed with Balin Export Company, Inc., 15 Moore Street, New York.

Q. Are you employed with any other operation, sir?

A. I am employed with the Elite Sewing Machine Corporation, same address.

Q. In what business is the Balin Export Company engaged?

A. Import and export of general merchandise and sewing machines.

Q. And what is the business——

Mr. Klots: I am sorry. I did not hear the answer.

[fols. 2073-2075] The Witness: Import and export of general merchandise and specific sewing machines.

Q. What is the business of Elite?

A. Importer and distributor of sewing machines.

Q. What are your duties with those companies, sir?

A. I buy and sell in it.

. . . . . .

[fol. 2076] Q. As a result of your experience did you obtain any indication of a demand by your customers for any particular type of household sewing machine?

A. Yes, I would say there was a specific demand. When the automatic machines came on the market, there was a specific demand for fully automatic zigzag machines.

Q. When you say "fully automatic,"——

A. I mean the built-in cam automatic machine. This was the term used.

Q. What did your customers say to you that indicated this to you?

A. Well, our customers said that they would prefer such machines because they have the built-in features, they are easy to operate, a dial just has to be moved in order to obtain the desired stitch, they don't have to look for the attachments to be inserted—for each cam to be inserted into the machine. It was a much more simpler operation to operate the built-in cam machine.

[fol. 2077] Q. Do you still carry a built-in cam machine?

A. Excuse me. I didn't hear that.

Q. Do you still carry a built-in cam machine?

A. No, we don't.

Q. When did you stop carrying the built-in cam machine?

A. We stopped carrying the built-in machine at the end of '58, I would say, the beginning of 1959.

Q. From whom had you been buying that machine, that is, from what trading company?

A. We have been buying our machines from Mitsui Company, Ltd.

[fol. 2078] Q. Will you tell us what happened, briefly, as to why you did not continue to buy from them?

A. Well, they advised us that they could no longer supply us with the built-in cam machines, and we lost our source of supply.

Q. And that was, you say, at about the beginning of 1959 or at the tail end of 1958 that you lost this supply of the built-in cam machines?

A. Yes.

Q. Can you tell us what your annual gross dollar-wise was of the household sewing machines in 1957?

A. Approximately $800,000.

Q. And in 1958?

A. Over $800,000.

Q. Over?

A. $800,000.

Q. And in 1959?

A. Approximately $100,000.

Q. To what do you attribute the decrease in your gross sales of sewing machines for the year 1959?

A. We were unable to have a complete line of sewing machines. We lost the source of the automatic machine and we were not able to get a replacement for this product which we handled, and our customers went away from us inasmuch [fol. 2079] as we were unable to give them a complete line, including the top of the line, the automatic machine.

Q. When you say "the automatic machine,"——

A. I mean the built-in cam machine.

Q. —you mean the built-in cam machine.

And you would refer to that as the top of the line?

A. Yes.

Q. Would you say it was the cream of the crop?

A. It was the cream of the crop.

Q. Did you make any effort to obtain another source of supply of built-in cam machines?

A. Yes, we did.

Q. What did you do, sir, in this connection?

A. Well, I made a trip in 1959 to Japan—I had some prior

negotiations before—in order to obtain the Sanwa built-in cam machine which was a very smart looking automatic machine.

Mr. Klots: What is the name? I didn't get the name.
The Witness: Sanwa.

Q. S-a-n-w-a?
A. S-a-n-w-a.
[fol. 2080] Q. You were saying that you were negotiating with Sanwa.
A. That's correct.
Q. What happened as a result of that, sir?
A. I went to Japan in May or June of 1959 and I met with the officials of Sanwa and told them of my readiness to purchase their built-in cam automatic machine under the condition that they would have to keep us harmless in case any problem arises out of the Singer patent infringement case going on, and they would not give us a guarantee, and we negotiated for approximately three-quarters of a year and Sanwa was not ready, could not see their way, they were afraid to give us a guarantee, and we abstained from buying these machines. The deal did not go through.
[fol. 2081] Q. Do you know, sir, whether or not this is the machine that you considered (indicating)?
A. The machine that we were negotiating for.

The Court: Showing the witness Exhibit number——
Mr. Elkins: Government's Exhibit 204.

Q. Do you know what a cam follower is, Mr. Margulies?
A. I am not an engineer. I have an idea what it is, yes.
Q. Can you, by looking at this machine, as you are looking at it now, determine or tell whether or not that machine contains one follower that moves to various cams or whether it contains one follower for each cam? Can you tell?
A. No, not by looking at the outside of the machine.

* * * * * * *

Cross-examination.

By Mr. Klots:

Q. Mr. Margulies, I think you testified that when you were receiving these built-in multi-cam machines you were purchasing them from Mitsui, is that right?

[fols. 2082-2089] A. That's correct.

Q. And they were made, were they not, for Mitsui by Sanshin & Company?

A. That's correct.

Q. And Sanshin & Company went bankrupt, did they not?

A. This is what I understand—at one time it was not actually bankrupt but had a reorganization.

Q. Yes. That was about when—1958 or 1959?

A. That was in the early part of 1959.

* * * * * * *

[fol. 2090] New York, June 22, 1961, 2 P.M.

* * * * * * *

JOHN H. BILLINGS, called as a witness in rebuttal by the government, having been first duly sworn, testified as follows:

Direct examination.

By Mr. Weinstein:

Q. Professor Billings, will you please state your present address?

A. 2995 Dogwood Lane, Broomall, Pennsylvania.

Q. Do you hold any academic degrees, Professor Billings?

A. Yes.

Q. Will you state what they are and the universities and colleges from which you received them, and state the years in which you received them?

A. Bachelor of Applied Science, University of Toronto, [fol. 2091] 1912; Master of Science, Massachusetts Institute of Technology, 1915; Master of Science, Harvard University, 1915.

The Witness: With regard to those dates, your Honor, I had plenty of time to forget that.

The Court: Well, time goes by quickly as we get older, Professor, and we do not like to be faced with memories of the past.

Do you question the professor's qualifications, Mr. Klots, or Mr. Pettit?

Mr. Pettit: No.

The Court: So if you want to take the professor's statement—have you got his qualifications in writing?

Mr. Weinstein: Your Honor, there are certain qualifications that I would like to have in the record.

The Court: You go right ahead, but his qualifications—his educational qualifications are not going to be questioned by the defendant.

Mr. Weinstein: I think Professor Billings, for instance, has written a book covering cam mechanisms, and I would like to have that in the record.

The Court: Go ahead.

Q. Professor Billings, do you hold the degree of Doctor [fol. 2092] of Engineering from Drexel Institute?

A. Correct.

Q. Is that an honorary degree?

A. Yes.

Q. And you received that in 1959?

A. Yes.

Q. Was that at the time of your retirement from Drexel?

A. Yes.

Q. Have you ever taught engineering courses at any university or college?

A. Yes.

Q. Will you tell us briefly your teaching-experience?

A. Instructor in mechanical engineering, University of Missouri 1913-1914; instructor in mechanical engineering, Johns Hopkins University 1915-1916; lecturer and assistant professor University of Toronto, 1916-1919; professor of mechanical engineering and head of Department at Drexel Institute of Technology, 1919 to 1959.

[fol. 2093] Q. Were you Acting Dean of engineering from 1945 to '46?

A. Yes.

Q. What courses have you taught in your capacity as an instructor or professor? Just the ones that you have taught most recently, Prof. Billings?

A. Well, say within the last five years, machine design, kinematics, thermodynamics, materials of engineering, management, labor relations.

Q. Do any of these courses encompass within them a study and analysis of cams and cam mechanisms or cam materials?

A. In particular, machine design and kinematics.

Q. Are you the author of any books on engineering subjects?

A. Yes, Applied Kinematics, Van Nostrand Company.

Q. Do you remember how many editions of that book have been published, Prof. Billings?

A. Three.

Q. Do you remember the years, by any chance?

A. Oh, '31, '43—what was the last one? I forget.

Q. 1953? Does that refresh your recollection?

A. About that.

Q. Does your book discuss and analyze cam mechanisms [fols. 2094-2100] as well as other related mechanisms?

A. Yes.

Q. Do you belong to any professional societies?

A. Yes.

Q. Do you belong to a number of engineering societies?

A. Yes.

Q. Have you acted, in addition to your capacities as instructor and professor, as a consultant to numerous firms as a mechanical engineer?

A. I guess you could call it numerous.

Q. Can you tell us have you ever acted in the employment of the United States as a consultant to the Bureau of Ships?

A. Yes.

Q. Have you administered contracts for Army Ordnance at Drexel Institute of Technology?

A. Right.

Q. Have you ever received any patents on inventions?

A. Yes.

• • • • • • •

[fol. 2101] The Court: Let me see if I understand the government's position now.

The three machines that the defendant points out as being non-infringing of the Gegauf patent are the Borletti—what are the other two?

Mr. Weinstein: There are three types. The Borletti is the one the professor is now testifying about. There is the type of machine which uses what we have loosely referred to as the barrelstave type of cam, and there is also the type of machine where the cam surfaces are concentric surfaces on a large plate. Those are the three types.

The Feather machine, your Honor, is the one which embodies the concentric cams; the Consolidated is one of the barrelstave type.

The Court: The government does not contest, does it, the defendant's statement that these three types of machines are non-infringing of Gegauf No. 2 or Gegauf No. 1?

Mr. Weinstein: We do not contest that.

The Court: You concede that.

Mr. Weinstein: Yes, we do concede that.

The Court: But it is your contention that although they are non-infringing machines, that they are not violative of [fols. 2101-2111] the Gegauf patents, that they are not substitutes for household use.

Mr. Weinstein: No, your Honor, I do not think we are necessarily taking that position.

* * * * * * *

[fols. 2112-2122] Q. Would you describe the type of cam mechanism found in this machine. If you need to, you may refer to Exhibit 112-A, which is before you, which pictures the mechanism.

The Court: Now we are talking about the Sankyo Seiki Consolidated Sewmor?

Mr. Weinstein: New Design, your Honor.

The Court: New Design, Model 770?

Mr. Weinstein: That's correct.

The Court: Does the government concede that is a non-infringing machine?

Mr. Weinstein: We do, your Honor.

A. The cams here are integral on a cylinder, such that to replace one cam it is necessary to replace the cylinder to replace all the cams.

It appears possible to get as many patterns as there are cams on this cylinder, which appear to be about fourteen; that in order to change any of those patterns or to get any additional patterns it will be necessary to put on a complete new cylinder.

* * * * * * *

[fols. 2123-2146] Q. Prof. Billings, I put before Defendant's Exhibit 115, which is the Vogue stitch Model D machine and ask you to examine the cam mechanism in that machine.

A. Similar to the previous exhibit, except for material of the cam.

Q. Is this a barrel stave type of cam, as we have described it?

A. Yes.

* * * * * * *

[fols. 2147-2157] New York, June 26, 1961, 2.00 o'clock p.m.

* * * * * * *

[fol. 2158] Mr. Pettit: I think I will take the Borletti machine first, your Honor.

[fols. 2159-2164] Cross-examination.

By Mr. Pettit:

* * * * * * *

[fol. 2165] Q. The fact is that there is a cam on there that controls the feed, is there not?

A. Yes.

Q. Each of these cams that we have been talking about can be used in conjunction with the feed cam in combination?

[fols. 2166-2174] A. We specifically exempted——

Q. I didn't ask you what you did the other day; I am asking you now——

A. The feed cam——

Q. Not what you did the other day; what you would use now. Can they be used in combination with the feed cam?

A. They can.

Q. When they are used in combination with the feed cam, how many different patterns can you get?

A. A large number.

* * * * * * *

[fol. 2175] Q. I have asked whether you can compute the number of patterns that can be obtained from the cams that are now in that machine.

Mr. Weinstein: And I object to that question, your Honor.

The Court: Overruled.

A. This is the machine, I take it, that has cam or cams to control the rate of feed.

Q. You have it right in front of you, Professor.

A. I would need to have a definition as to what constitutes a different pattern. It is possible, to be sure, by varying a cam that controls the rate of feed to produce all kinds of changes in pattern—some large and some small. It is very difficult to get at the number of patterns that can be produced under a situation like this—you might say that an [fol. 2176] infinite number of patterns could be produced, but that would mean making infinitely small changes in the feed.

* * * * * * *

[fol. 2177] Q. I have asked whether this vast array of small variations that you mentioned is not insignificant from the standpoint of the practical use of the machine.

A. What do you mean by "insignificant"? The housewife may wish to make small variations in the length of stitch. She would get considerable variety out of that. It might not be reproduceable, but why shouldn't she do it if she wants to.

Q. Then your testimony is that this machine is qualified to produce an infinite variety of stitches for the woman who wants them.

Mr. Weinstein: Your Honor——

A. Theoretically, yes. Theoretically, yes.

Q. So that theoretically, if she wanted to, this machine [fol. 2178] could produce an infinite variety.

A. That's right.

Q. Now, Professor——

A. And there is nothing in that conclusion that is opposed to what I said the other day.

Q. I have not asked you that, Professor. You were speaking in terms of using the knob to change the density and in using the knob to change to right, center and left when you were talking of these infinite varieties, were you not?

A. Yes.

Q. Just take the cams and forget those knobs for a minute. If you are using this cam set in any one position for your density and for your left, right or middle, just assume that it is set and left there, and you are using various combinations of the cams that are in that machine, how many different patterns can you get?

A. Two.

Q. Two is all you can get by the use of those three cams, no matter what combination you put them in?

A. I am not including the regular stitch here as a pattern. The regular stitch would make three.

Q. Doesn't each of these cams have four positions in [fol. 2179] which it can be inserted in the machine?

• • • • • • •

[fol. 2180] The Court: Four holes, four positions, and you remarked "four holes" while holding something in your hand. What do you hold in your hand?

The Witness: A cam.

The Court: The cam that you have removed from this Borletti machine.

[fol. 2181] The Witness: That's right.

Q. That is the cam that controls the thrust of the needle, lateral vibration of the needle?

A. Yes.

Q. Now would you look at the cam that is on the other side of the machine, the cam that controls the feed.

A. Four positions likewise.

By the Court:

Q. What do you hold in your hand now, Professor?

A. This is the cam which controls the feed.

Q. And you have taken that off of Exhibit 114, the Borletti machine.

A. That's right.

Q. This controls the feed of what?

A. The feed of the cloth, the fabric, whatever is being worked on.

Q. And the other cam that you took off from this Exhibit 114, what did that control?

A. That controlled the lateral movement of the needle.

The Court: All right.

By Mr. Pettit:

Q. The machine can be operated with those two cams [fols. 2182-2193] working in combination, can it not?

A. It can.

Q. And by the use of variation of their relative positions, how many different patterns can you get?

A. 16.

Q. And you can use one of them in combination with two cams, can't you?

A. One in combination with——

Q. Either of the other two cams.

A. Yes.

Q. So that gives you four more.

The Court: It gives you how many more?

Mr. Pettit: Four more.

A. Four more.

Q. So you can count up to at least 20 already.

A. That's right.

Q. And each of the two cams can be used singly, without any combination with the other.

A. That's right.

Q. That gives you 22. Now, can you figure any way of getting another one?

A. Put on a different cam.

• • • • • • •

[fol. 2194] Q. This is your testimony, Professor——

The Court: No. Do you recall, Professor, when——

Mr. Pettit: Page 2110.

The Court: —you were examined, did you give this answer to this question that Mr. Pettit will now read.

Q. "Q Professor Billings, if the Borletti machine were redesigned to incorporate a number of built-in cams—say six, seven or eight—so that an operator could select from the built-in cams one of the six, seven or eight, would there be any great delay in going from cam number 1 at the back of the machine to the cam which would be closest to the front of the machine?

"A. Yes, there would be delay, of course, which would require complete redesign of the control mechanism of the follower.

"The present arrangement where there are only three positions is fairly easy to accomplish. It would be necessary to find, if you had seven cams, seven positions. Probably an entirely different type of mechanism would be necessary in [fol. 2195] order to make the follower stop on a particular cam. It would be a matter of design and development, but it probably would take a great deal more space, not only for the additional cams but for the controlled mechanism and to the extent that components increase the space in a machine, it generally means the machine itself has to be larger."

A. Leaves no space.

Q. Yes. But you were pointing out as one of the disadvantages that not only would you have to have increased mechanisms, you would have to have increased space to hold it and the increased space would make your machine be bigger.

A. Right.

[fol. 2196] Q. You were certainly pointing that out as one of the disadvantages, were you not?

A. That's right.

Q. Then do we have it that increased size of the head is in itself a disadvantage?

A. Increased size——

Q. Is in itself a disadvantage?

A. —is in itself a disadvantage.

Q. Then doesn't it follow that decreased size is in itself an advantage?

A. Yes.

Q. Well, then, doesn't this machine have a considerable advantage over the 401 and other machines because it does have a decreased size?

A. To the extent that it has a decreased size——

Q. That is an advantage.

A. —it is reasonable to say that it has an advantage.

Q. The mechanism in this one is very simple, isn't it?

Mr. Weinstein: Objection, your Honor. I think the term "simple" has——

A. It is a relative term.

Q. Would you consider it simple?

[fol. 2197] A. I would not consider any of these machines simple.

Q. Would you consider it more simple than the 401?

Mr. Weinstein: Objection, your Honor.

A. Yes.

Mr. Weinstein: Your Honor, more simple than what aspect of the 401? Are we comparing the two machines?

The Court: You make a little note on it. The Professor did not put any limitation on it, and you may ask him in redirect in what respect is it more simple than the 401. I will ask him and save you the trouble.

By the Court:

Q. In what respect is this machine more simple than the 401?

A. Well, it has fewer cams.

Q. Any other respect?

A. That affects the control, to be sure. It is a relatively simple matter to shift to any one of these three positions, and it requires a little more mechanism to make use of all these cams and particularly to be able to take intelligence from two cams at a time and transmit it to the lateral move-

[fol. 2198] ment of the needle.

Q. Would you say then that this Borletti machine is easier for the housewife to operate than the Singer 401?

A. Easier for the housewife to operate? Well, there again you are getting me into the realm of operating machines.

Q. From a mechanical point of view, from the point of view of a mechanical engineer, would you say that the Borletti should be, according to mechanical design principles, easier to operate by the housewife than the Singer 401?

A. I would say there wouldn't be much difference if the housewife is properly instructed in both these machines, not much difference.

Q. From a mechanical point of view you feel that they are really interchangeable, then, from the point of view of facility of operation.

A. Yes.

• • • • • • • •

[fol. 2199] By Mr. Pettit:

Q. The construction of this would be much less expensive than the construction of the 401 cam mechanism, would it not?

A. Much less?

Q. Let's use the word less.

Mr. Weinstein: Objection, your Honor. Are we talking about the Italian cost of manufacture or the American cost of manufacture?

The Court: He is talking about the American cost.

Mr. Pettit: I will come to that in a minute in another mat-
[fol. 2200] ter, and you will object then.

The Court: You anticipate. Mr. Weinstein may disappoint you.

A. Assuming that the two machines are manufactured under the same conditions of man-hour, cost——

The Court: In the same shop. Assume that they are produced in the same shop.

A. (Continuing) The same conditions, as the use of automatic machinery, and so on.

The Court: Same shop, same facilities, same labor.

A. (Continuing) I don't think there would be a great deal of difference between the cost of the two machines.

• • • • • • • •

[fol. 2201] Q. So in none of your testimony before were you taking into consideration the fact that a piece of mechanism may have been made in Japan whereas another piece of mechanism was being made in the United States.

A. That was not mentioned.

Mr. Weinstein: Objection, your Honor.

The Court: Overruled.

Q. Would you be kind enough to measure the distance [fols. 2202-2204] around this machine at the point where the mechanism is, in this Borletti machine (handing tape measure)?

The Court: What is the purpose of this?

Mr. Pettit: I would just like to show the extent to which this is smaller.

The Court: I can make a visual observation.

Mr. Pettit: Then I will withdraw the question.

The Court: It is quite apparent that the Borletti machine is elongated and narrower than the Singer machine. You don't have to have a tape measure for that. At least I don't, anyway, and I assume I am not as sharp as most people are.

* * * * * * *

[fol. 2205] By Mr. Pettit:

Q. The cam mechanism contained in the 401 machine. I would like to show you this stack of cams (handing). That looks to you the same as the stack of cams that you looked at in the 401 machine, does it not?

A. It does.

Q. That is composed of seven steel cams, is it not?

A. Yes.

Q. I would like for you just to suppose, Professor, that stack of cams is manufactured as follows:

1. Each of the seven cams is first rough-punched by press with an appropriate die from a strip of steel material so that the cam, its four holes, and its peripheral cam surface, with its various hills and valleys, are formed in the rough. Since each of the seven cams has its own particular cam surface configurations, seven different punching operations are necessary in order to produce the seven rough cams. Natu-

rally, in production, seven different punching dies are used, with the result that there are accumulated seven different groups of cams.

2. Rough cams have to be pressed flat in press by hand.

[fol. 2206] 3. The opposite two flat faces of each of the cams are then ground on a grinding machine, fed by hand by an operator, so that the thickness of the cams are uniform. Again, the cams are maintained in groups, all of the cams of any one group having the same peripheral design.

4. The various cams are then individually shaved by an Essa press with an appropriate die, with the result that the peripheral cam edges of each cam are finished to size. This requires seven individual shaving operations, since there are seven different steel cams. Again, in production, we end up with seven different groups of cams.

5. The cams are then placed in a rumbling machine for the purpose of removing the rough edges of the cam surfaces. The cams are placed in the rumbling machines in groups with all of the cams in any one group having the same peripheral design.

6. Deburr center hole of cam.

7. Seven different cams comprising a set are then hand assembled together in proper sequence and placed in a jig with the seven cams being placed in proper phase relative to each other by means of a pin which is inserted into one [fol. 2207] of the two holes provided in the cam during the first punching operation.

8. Each unit of seven cams is then hand-inserted into a boring machine for the purpose of boring the positioning hole to proper size, which hole receives the positioning pin.

9. Each unit of seven cams is then taken to the 401 machine assembly line and is hand-inserted into a 401 machine so that the stack will be mounted upon a vertical shaft and thereafter locked upon such shaft by means of a plate and several locking screws.

I would like to ask you, Professor, if that is not quite away from the assumption of pressing out 20 dies at one time and operating with great efficiency?

[fol. 2208] Mr. Weinstein: Objection, your Honor, on two grounds. The hypothetical question is based on facts not in

evidence, and I think the entire inquiry is irrelevant to this case.

The Court: Overruled.

Mr. Weinstein: This entire line of inquiry——

The Court: I am going to take it.

Q. That is a far different assumption—let me strike the question out; that is quite a different assumption from the one you made yesterday, isn't it?

A. Yes, it is.

Q. Now if you were told that that is the process, would you say that the manufacture of one of these barrel stave cams is a more expensive operation than the manufacture of the Singer 401 stack?

* * * * * * *

[fols. 2209-2213] A. I would say that it might be.

Q. Would you testify that in your opinion it is?

A. Provided the surfaces of this cam are machined, I would say that it is.

Q. But you do not know whether the surfaces of that cam——

A. No, I do not know.

* * * * * * *

[fol. 2214] Q. And you have doubted that this one has been machined?

The Court: By "this one"——

A. I am doubtful about the machining on either one of them.

Q. Then if they are neither machined, are you testifying that they are both molded probably?

A. Yes.

Q. And even though they are both molded, it would be your testimony that you believe it would cost as much to make a plastic molded cam as it cost to make the Singer 401 stack of cams?

A. Substantially. I beg pardon. That last question, did I [fol. 2215] understand that you said machined or unmachined?

Mr. Pettit: Will you read the question back, please.

(Question read.)

A. My answer would be provided they are machined, provided the plastic cams are machined.

Q. Now I will ask you the question once again. Assuming that they are not machined, then what would your assumption be?

A. My assumption would be that these would cost less than the Singer cams.

Q. And they would cost considerably less, wouldn't they, Professor?

A. Could be.

* * * * * * *

[fol. 2216] Q. I would like for you to look at this machine which was put in evidence by the government, Exhibit 207, and I ask you if that does not have the same type of cam.

A. Yes.

Q. That is a much larger cam than the one that is in Exhibit 113?

A. The outer cam is larger than the outer cam on this (indicating).

Q. Call it a plastic cam—just the one unit—whatever you [fol. 2217] call it—this one is larger than the plastic cam, isn't it?

A. Larger in outside diameter.

Q. In outside diameter.

A. Yes.

Q. In circumference.

A. Yes.

Q. How many cams—have you looked at this closely enough to know how many cams there are on that plastic one?

A. I think I counted them once but I don't remember the number. It is a considerable larger number than this one has (indicating).

Q. Around 14 of them?

A. Could be.

Q. As compared to 7 on the Singer?

A. Yes.

Q. They could give away the inner cams entirely and have

far more cams on there than the Singer has on its 401, couldn't they?

Mr. Weinstein: Your Honor, we did not hear the beginning of it. May we have that question read back?

The Court: Yes.

[fol. 2218] (Question read.)

A. By "they" you are referring——

Q. To the manufacturer.

A. Of this machine?

Q. Yes.

The Court: And by "this machine," what exhibit?

A. Could give away——

Q. Could eliminate the inner two or three or four of the inner cams and still have many more cams on it than obtained on the Singer 401 machine?

Mr. Weinstein: Your Honor, it is obvious that 14 is larger than 7. I do not know that we have to pursue that.

The Court: This is preliminary. I will permit it.

A. To be sure, if you took out the four inner cams you would still have more cams than the 401.

Q. That is a much cheaper piece of mechanism to make than Singer's stack of cams, isn't it?

A. I would judge that that is cheaper to make.

Q. And considerably cheaper.

A. Than the Singer cams.

Q. And considerably cheaper, wouldn't you say?

[fols. 2219-2256] A. Considerably.

* * * * * * *

[fol. 2257] New York, June 27, 1961, 1:30 o'clock p.m.

* * * * * * *

[fol. 2258] Colloquy Between Court and Counsel

Mr. Pettit: I would like to call attention to the fact that this testimony that they have offered is not limited to the relevant market. They have several times referred to the

fact that it would show the effect of the conspiracy. Now, the conspiracy is to keep out Japanese machines, and they have argued that this increased cost that they claim came about has handicapped these Japanese that the defendant is accused of excluding.

It would seem to be highly relevant to show that costs in Japan, when translated into competition in the United States with the United States, is utterly insignificant for any practical purpose.

The Court: Well, I think we have sufficient to establish that in so far as it is necessary to do so in the prices which have been stipulated.

Mr. Pettit: Well, I think the Court might take judicial notice of the fact that the cost of manufacture in Japan is so much lower than in the United States that that is what causes one of the difficulties.

The Court: It is almost a fact of common knowledge, but I do not think I am required in this case to do it. You [fols. 2259-2262] have stipulated the prices of these various machines here in America.

Mr. Pettit: Yes.

The Court: My recollection is that there is a considerable variance in the price.

Mr. Pettit: Correct.

The Court: That the Singer or a comparable machine has to bring a larger price than any of the imported machines, either Japanese, Italian, Swiss or German machines. I think that we have enough evidence in the case and you have an exception to my ruling.

Mr. Pettit: Thank you.

* * * * * * *

[fol. 2263] EDWARD J. HERBST, called as a witness in surrebuttal by the defendant, being first duly sworn, testified as follows:

Direct examination.

By Mr. Pettit:

Q. Where do you live?

A. 15 Sandra Circle, Westfield, New Jersey.

Q. And where are you employed?

A. Elizabeth Product Engineering Laboratory, Elizabeth, New Jersey. It is located at the Elizabeth factory of The Singer Manufacturing Company.

Q. You are employed by The Singer Manufacturing Company?

A. That's right.

Q. What are your duties there?

A. I am the chief development engineer for family machines.

Q. As chief development engineer what are your duties and responsibilities?

A. I am responsible for a development group which prepares the specifications for machines and develops new machines.

Q. As part of your duty, the study and research and development of less expensive parts, less expensive assemblies is made?

[fol. 2264] A. Yes, this is one of our duties. We actually have a small group solely responsible for cost reduction in our existing machines.

Q. Are you in charge of that group?

A. Yes.

Q. How long have you been employed in the research department of The Singer Manufacturing Company?

A. Eleven years, since graduating from college.

Q. Would you please state the degrees you have had from colleges.

A. I have my bachelor's degree in mechanical engineering from Stevens Institute of Technology. I also have my master of science degree from the same institution.

The Court: A good school.

The Witness: Yes, sir.

The Court: Still in Hoboken?

The Witness: Yes, sir.

Q. Do you belong to any professional societies?

A. Yes. I belong to the Society of Professional Engineers and I am a member of the Society of Plastic Engineers.

Q. What is the Society of Plastic Engineers?

A. This is a society which is of course primarily con-
[fol. 2265] cerned with the engineering of plastics, and as such we have a meeting each month and new developments in plastics are presented. We also are very active—we take part in the Plastics Show that is held every year and a half.

Q. Are you an investor in the mechanisms relating to sewing machines?

A. Yes, I would consider that I am an inventor. I have eight patents that have already been issued and I have four more that are pending.

Q. In your capacity are you acquainted with the processes that are used in the manufacture of the stack of cams embodied in the Singer 401 machine?

A. Yes.

Q. Have you prepared a statement setting forth the main operations, the principal operations contained in the creation of that unit?

A. Yes.

Q. I show you a document and ask you if that was prepared by you.

A. Yes, this was prepared by me.

Q. Do each of the operations set forth on that sheet occur in the process of making and assembling this unit?
[fol. 2266] A. Yes.

Q. Are there various other processes and steps not listed there?

A. This is only the primary steps. There are other handling and cleaning steps but I have deleted them from this listing of the operation.

Mr. Pettit: Your Honor, I offer this in evidence.

The Court: Being a simplification of his testimony in short?

Mr. Pettit: That is the statement I read yesterday to the witness that was on the stand then.

The Court: Yes.

Mr. Weinstein: I would like to read it, your Honor.

The Court: It is simply offered as a statement in lieu of testimony.

Mr. Pettit: I will be glad to go over each one.

The Court: He would have to read it off anyway.

Mr. Weinstein: There is no objection, your Honor.

The Court: Received in evidence.

[fols. 2267-2270] (Received in evidence as Defendant's Exhibit 200.)

Mr. Pettit: I would like to refer to page 2205 of the record where this statement was read.

The Court: Yes.

* * * * * * *

[fol. 2271] The Court: Mr. Pettit, what is the purpose of this testimony so I can orient it in my own mind?

Mr. Pettit: I want to show that the operations required to build this stack of cams with these steel cams is a very tedious, expensive operation and must be done with great care and that there is literally no comparison between the cost of producing the stack of cams we have in the 401 and the cost of producing almost any other of these cams that the government has referred to. They have tried to draw the picture that there is some disadvantage and that other people have to make more expensive equipment.

The Court: Your point is that if they wanted to spend the money on these other non-infringing machines they could produce at a little more expenditure or additional expenditure a non-infringing machine which would be as mechanically perfect as the 401, is that your point?

[fol. 2272] Mr. Pettit: No, your Honor. It is sort of just the reverse of that. The government has tried to claim that these Japanese manufacturers are at a great disadvantage because they would have to adopt a form of mechanism that is expensive to make, more expensive than if they made this stack of steel cams with the follower moving up and down. It is utter and complete nonsense, and I think anyone by just looking at the machine could tell that it is not true, and I want to build by this witness a foundation from which to then show that the machines that the Japanese make are not as expensive to make as the Singer 401 type of machine.

The Court: Does the government concede that or dispute that?

Mr. Weinstein: Your Honor, the government did not introduce cost into this case except in a very passing sense. We merely wish to show that if a barrel stave cam became defective you had to throw out the barrel, that there was no such thing as replacing a single cam. If Mr. Pettit were to make a true comparison he would have to prove by cost data that it was cheaper to replace a single cam from the 401 machine—I mean more expensive to replace a [fol. 2273] single cam from the 401 machine than the entire barrel, all of which we say has no relevance to the case, but if he is going to make that point, that would be the point he would have to make.

We merely wish to show that the barrel stave and the annular cam and the Borletti machine had built-in design difficulties.

The Court: Coming back now to my question, does the government dispute that the Japanese machines are capable of being produced as they are presently designed at a cheaper price or cheaper manufacturing cost than the Singer machines?

Mr. Weinstein: Your Honor, we have no knowledge as to the specific cost of the Japanese manufacturers, and this witness is not testifying as to the cost.

The Court: No, we are talking not about that. We are talking about the mechanism. It is quite apparent to me that it costs considerably more for Singer to turn out the stack of cams than it would cost to turn out this plastic set of cams on one disk. That is obvious to anybody's eyes and using a little bit of common sense.

Mr. Pettit: May I add, your Honor, that he has not, [fol. 2274] frankly, so stated in his testimony. The record is filled with attempts by the government to show that the relative cost of this machine sitting in front of the witness is more than that of the 401. He says that it was casual, but he would leave the record with testimony from his expert witness that it costs more to build that set of cams in that mechanism than it would cost for the 401.

The Court: You are referring now, for the record, to which machine? They are two before the witness.

Mr. Pettit: The machine that is marked 112, and this other machine which is the government's 207, I believe.

The Court: Now, they both have the barrel type cam?

Mr. Pettit: Yes. Now, if he wants to concede that the cost of manufacture of these cams, of these plastic cams is less than the cost of the manufacture of the Singer 401 we can drop this line of testimony.

Mr. Weinstein: First of all, your Honor, we could not concede it because we don't know, and we do not think Mr. Pettit knows.

[fol. 2275] The Court: Well, I will ask him as an expert. I will ask him and save a lot of time here.

You are familiar with the cost of manufacture of various type cams?

The Witness: Yes, yes.

The Court: Can you give us your opinion as to whether or not it would be more expensive, more or less expensive to produce the barrel type cams shown on these two machines now before you than it would be to produce a stack of cams such as is produced by Singer for its 401?

The Witness: This one would be a great deal less expensive.

The Court. Now, "this one" is——

The Witness: Molded cam stack.

The Court: That is the molded barrel cam?

The Witness: Right.

The Court: That is on what machine so we get it?

The Witness: It is on the Vogue stitch.

The Court: The Vogue stitch. That is the Japanese machine?

The Witness: Right.

The Court: You say that would cost more or [fol. 2276] less?

The Witness: This would be a lot less expensive than the 401 cam stack. You get your surfaces molded in the die and it is a less expensive way of——

The Court: An inexpensive operation?

The Witness: Right.

The Court: That barrel cam or that Vogue stitch is made of plastic?

The Witness: Right. And this one is even less than this one.

The Court: You are now pointing to the Universal 113.

The Witness: Right.

The Court: And you say that is less than the Vogue stitch barrel cam?

The Witness: Right.

The Court: The 113 Universal has a disk cam.

The Witness: Right.

The Court: These two are much cheaper than the Singer 401.

The Witness: Right, right.

The Court: And the 113 the plastic disk cam is cheaper [fol. 2277] than the barrel type?

The Witness: Right.

The Court: On the Vogue stitch.

The Witness: Right.

The Court: What about this one here, what name is on that?

The Witness: This is the Sewmor.

The Court: The Sewmor, Exhibit 112.

The Witness: Right.

The Court: What about the cost of that cam, that barrel type cam?

The Witness: The cost of this one is increased over this one because——

The Court: Wait, now, you say this one and this one. The cost——

The Witness: Of the Sewmor is more expensive.

The Court: The Sewmor, 112, is more expensive——

The Witness: Than the Vogue stitch.

The Court: The Vogue stitch is what number so we get this all on there? It is the dark blue, isn't it?

The Witness: 115.

The Court: 115.

[fol. 2278] The Witness: Due to the fact that—you can see here, they actually machine each surface on this.

The Court: On the barrel type?

The Witness: On the Sewmor.

The Court: Sewmor, 112, I think it is. On the 112 the cams on the barrel type are separately machined?

The Witness: Right.

The Court: Whereas on the Vogue stitch and the Universal they are molded cams?

The Witness: Molded, right, right.

The Court: All right. That is very plain to me. It is quite apparent, too.

All right, I think that establishes it well enough, Mr. Pettit.

Do you want to put this stack of cams in evidence now, the Singer cams?

Mr. Pettit: Yes.

The Court: To show the various steps of manufacture.

Mr. Weinstein: May we see them?

The Court: Any objection?

Mr. Weinstein: No objection, your Honor.

[fol. 2279] The Court: All right, received in evidence.

(Received in evidence as Defendant's Exhibit 201.)

The Court: Apparently, then, the Singer machine, particularly with relation to its cams, is a precision machine, isn't it?

The Witness: That's right.

The Court: Precision built.

The Witness: Right.

By Mr. Pettit:

Q. Mr. Herbst, is the stack of cams manufactured for the 401 machine adapted to be taken apart and have inserted in it a different cam than the cam that was originally in the stack?

A. No.

Q. Now, will you state why it is not adaptable to that process?

A. Well, I would like to use an assembly drawing because I think this would be the best way for all parties concerned to understand it. Actually this assembly drawing which we have is No. 172,115. It illustrates the last operation as far as the cam stack is concerned. Actually the cams are assembled as a stack and the positioning pinhole is bored to a tolerance of a half a thousandth [fol. 2280] of an inch.

. . . . . .

[fol. 2281] The Court: There is no play then?

The Witness: There is no play. This is a nice slide-fit precision job as far as the fit is concerned. However, the distance between the center of this hole and the center of the shaft——

Q. Center of the shaft hole?

A. Shaft hole which the cam is mounted about has a necessary tolerance of .003. That is, your distance from the center line of the hole in the cam to the bored hole which we hold to a half a thousandth is held to .003.

Q. That is the maximum variation?

A. That is the maximum variation. In other words, it could vary—if you want to get the specific dimensions—.720¼ to .717¼. This is how close we actually hold those, that tolerance, or that dimension.

Q. You are speaking of the difference between the hole in which the shaft——

A. The distance between the center of the positioning [fol. 2282] pin hole.

Q. That is the shaft hole upon which the stack of cams is mounted?

A. That's right.

Q. And the positioning pin?

A. Right. Now, actually we get this cam stack and we bore this hole. This means that as far as our limits are concerned, which are necessary limits, and actually as far as manufacturing is concerned the position of this pin can vary from one stack to another by a total distance of .003.

Q. Therefore it would be quite possible to take a cam from another lot and find that you were unable to put it in any particular set of cams?

A. That's right. You may be fortunate enough if—let's say you got a set of cams that were bored the same day and that machinery was set and there wasn't one bit of movement as far as our machinery was concerned. It may be possible to have some cams that are interchanged, but as far as variation is concerned in production it has not been a practical thing to interchange cams from one stack to another.

Q. Now, if one of these should become inoperative or [fol. 2283] broken, what is the factory recommendation on the way to handle that particular problem?

A. The whole cam stack is replaced.

* * * * * * *

[fol. 2284] The Court: What is a stack of cams like that worth in the 401?

The Witness: Your Honor, I have no idea as far as the actual cost of the cam stack.

The Court: Does it cost more than the plastic disk cam as shown on the machine that you had before?

The Witness: You mean an individual metal cam versus a plastic cam?

The Court: No, the stack of cams that you say has to be replaced.

The Witness: Oh, yes, definitely, a great deal more.

The Court: Does it cost more than the barrel type plastic cam on those machines made in Japan?

The Witness: Yes.

The Court: So the cost of repairing the Singer 401 by replacing metal cams if they are injured or marred is more than replacing one of these plastic cams?

The Witness: That's right.

[fol. 2285] By Mr. Pettit:

* * * * * * *

[fol. 2286] Q. Would you tell me whether in your opinion these plastic cams have any advantages from a manufacturing standpoint?

A. Yes, from a manufacturing standpoint the plastic cams do have the advantage of economy of mass production. Here you have a plastic cam where if you look at this you can actually get all of this into one part of your die. All of the annular cams that are developed on this thing you get into one part of your die. It permits the use of multiple cavities in production. In other words, you can manufacture these at the rate of four or eight parts per shot.

Q. This entire disk you are speaking of?

A. Yes, the entire disk with your various cam surfaces on it. In doing this you also are getting the advantage of a very smooth surface. In other words, whatever surface is developed in the cavity of your mold will be reproduced in the molded part.

You just look at this surface here. You will see that it is a mirror-like surface actually, and this is the result of polishing and dressing down your mold surface. So naturally this gives you a surface that your follower

[fol. 2287] is running against which is a very smooth surface.

In the case of the metal cams, as you saw by the operations that we performed, we not only have to punch the shape of the cam but then we have to trim it to get this smooth surface.

So this is one of the advantages that you get with a molded cam surface.

In addition to that, of course, you are getting the advantage of weight. The fact that this is a much lighter component compared to our cam stack—and I think if we just hold one cam stack in one hand and the other in the other hand you get an appreciation of the difference in weight, which is important particularly when you are selling a machine, I would say a portable machine in the United States.

Q. Does that let you make other parts lighter also, the annular cam?

A. You mean as far as the—in what respect, the rest of your mechanism?

Q. Yes. Would your whole head be smaller?

A. Oh, yes, as a result of developing, making this part smaller, it permits you to make the arm and your housing, your top cover a much smaller assembly, and this results [fol. 2288] in economy in that, first of all, you are using less material for the arm and the top cover; secondly, you are faced with less finishing costs. In other words, your finishing costs are directly related to the amount of area that you have to polish and paint and as a result the whole configuration or whole assembly becomes a less expensive assembly.

Q. What about hand operations in handling the cams in construction? Do you handle the plastic cam in the course of manufacture more or less or the same that you would handle the various cams in the Singer stack?

A. Oh, the Singer stack cams would be handled many times over what this plastic cam would be handled. I mean you would actually be getting this part, I would envision, as a fully molded part without any operations on it.

Q. And you would have no problem there of the tolerance of .001 of an inch with the thickness of this cam, would you?

A. You mean the thickness this way (indicating)?

Q. The depth, yes.

A. Well, on this cam the dimensional thickness would [fol. 2289] be predicated by how the dies closed, but as far as the relationship of one cam surface to the other it is established by the die itself; in other words, how you establish this cam surface relative to the other surface is determined in your die cavity, and if you make your die cavity correct all these surfaces will come out relative to one another correct, and as a result you have a mass production item that does not have the variations that you would experience with a multi-cam construction where each individual cam is a separate component.

Q. Now, from forcing your plastic material into your mold, if you should press it apart slightly, would——

A. That's right, you might have some variation from the top of this surface to the very bottom. As far as variation between these points (indicating), it would be accurate.

Q. And a variation due to the factor I have just mentioned would be of significance or not in the individual cams? Put it this way, does it make any difference whether this cam is .002 of an inch thicker than another cam?

A. Oh, no, it wouldn't. It wouldn't. You just look at the [fol. 2290] travel of the follower and .002 isn't going to make any difference over a surface of six cams. In the case of this one it is many—well, it is quite a few more cams introduced there.

Q. Now, if you want to make a larger cam you can just have larger molds and put on the additional cam surfaces in the mold.

A. That's right.

• • • • • • •

[fol. 2291] Q. Would you tell me if you know how many times the individual cam contained in the 401 machine is handled in the process of its manufacture and assembly, and I mean handled by hand?

A. Well, I know it is in excess of 18. I think it is about 18 to 21 times it is handled by hand. The operation sheets would show specifically the number of handlings in the process.

• • • • • • •

[fol. 2292] The Court: In your opinion would it cost more to produce and market this Borletti machine from a manufacturing point of view than it would the Singer 401?

The Witness: In my opinion it would be less expensive to produce than the Singer 401.

The Court: On what facts that you observed by a study of the machine do you base that statement?

The Witness: On the basis of a cursory examination of the machine. Number one, you can see that the size of the arm is smaller.

The Court: The size of what arm?

[fol. 2293] The Witness: The frame of the machine.

The Court: The outside frame, the body frame is smaller?

The Witness: Yes.

The Court: What else?

The Witness: The number of parts that they are actually using in their mechanism is a very good indication as to the relative cost of manufacture. I have experienced this time and time again in the past.

The Court: The more parts, the more the manufacturing costs go up?

The Witness: Right.

The Court: The simpler you can make the machine, the less the cost of production?

The Witness: That's right, your Honor.

The Court: Anything else?

The Witness: The fact that they are using the movable plastic cams is an indication of a less expensive cost of manufacture. The arm is a die-cast arm.

The Court: You say the removable plastic cams that you find in this Borletti machine cost less under similar circumstances of production than to produce the built-in metal cams such as Singer uses?

The Witness: Yes. These cams are flat, easily molded [fols. 2294-2298] cams.

The Court: Those are molded plastic cams?

The Witness: That's right.

The Court: Against Singer's stamped machine-tooled cams?

The Witness: Right.

* * * * * * *

Cross-Examination.

By Mr. Weinstein:

[fol. 2299] The Court: He is here to give his opinion as an expert. Is this barrel cam in this Vogue machine a molded cam?

The Witness: Yes.

[fol. 2300] Q. Would not the cost of this cam depend in measure upon the material used to produce it, the plastic that is injected into the mold?

A. Yes. If you were going to use nylon, for example——

Q. Just answer the question.

A. The material cost is a very significant factor.

Q. Very significant?

A. I would say—you are talking relatively. Material-wise, material can cost 60 cents a pound or $1 a pound, but it depends upon how much material they are actually using. It might make a different of two cents to manufacture that part, in going from an inferior plastic to an expensive plastic. As far as two cents is concerned, the Singer organization, we would pick the more expensive plastic. Then it becomes an insignificant thing if you want to achieve functionally the best design [fols. 2301-2305] possible.

Q. Do you know whether or not this is an expensive plastic or an inexpensive plastic?

A. I cannot tell on the basis of the appearance of it, but it appears as though it is an injection-molded plastic, the surface qualities of the cam are good, and I venture to say it represents a fairly good plastic.

[fol. 2306] JOHN ROBERT CURRERI, called as a witness in surrebuttal by the defendant, being first duly sworn, testified as follows:

Direct examination.

By Mr. Pettit:

Q. Will you state where you live.

A. 291 Vermont Avenue, Oceanside, New York.

Q. What is your business or profession?

A. I am professor of mechanical engineering at the Polytechnic Institute of Brooklyn.

Q. And what degrees do you have?

A. I have a bachelor's degree of mechanical engineering from the Polytechnic Institute in 1943 and a master's degree from the Polytechnic Institute in 1948.

Q. And do you belong to any societies?

A. Yes. I am a member of the American Society of Mechanical Engineers and the American Society of Engineering Education.

Q. How long have you been teaching, Professor Curreri?

A. I have been teaching since 1948.

Q. Have you testified as an expert witness in other cases?

A. Yes. I have testified a number of times as an expert [fol. 2307] in various cases.

Q. Would you be kind enough to look at the cams that are on the machines before you, the Alden's Cam 3-in-1, which is Government's Exhibit 207 and the Universal machine, Defendant's Exhibit 113.

The Court: As you refer to each machine, refer to the name and to those numbers.

Q. You have seen the other set of cams in the Singer 401, have you not?

A. Yes.

Q. Could you tell us whether in your opinion there are any advantages in having plastic disks with the cams on the top surface as compared with the stack of cams in the steel disk found on the Singer 401 machine?

A. There is an obvious advantage in terms of cost required to produce the two. In terms of it being far simpler and far cheaper to produce the plastic cam as compared with the difficulty involved in machining the stack of cams of the 401.

Q. From the standpoint of pressure angle, will you state the problems and disadvantages in the plastic cam.

A. You could not really state the problem in terms of the material. The problems would be in terms of other [fol. 2308] factors associated with design. There are no great problems involved in either of these considerations.

Q. Do you consider that there are pressure angle problems in respect to having smaller cams on the inside of the plastic cam than on the surface?

A. Yes, there are problems as the diameter becomes less. As I have examined this machine, Exhibit 113, it did not seem to me the problems precluded any successful design.

Q. Would you say there are any advantages in having a large plastic cam such as the one that is in Government's Exhibit 207?

A. Certainly. As the diameter of the cam increases there is an advantage in reducing the problems incurred by pressure angle. There is also an additional advantage in these cams in so far as they are essentially transverse cams, even though they are mounted about a center. This means that the pressure angle is reduced because of the fact it is a translated cam, completely mounted about a central axis as compared to a rotary cam.

Q. By that do I understand you to mean that there is an advantage from a pressure angle standpoint in taking information from the surface of the cam rather than from [fol. 2309] the periphery of the cam, assuming the condition is the same?

A. Yes. There is some advantage in terms of reducing the pressure angle because it is translating rather than actually in the rotary case rotating.

Q. I would like to show you Defendant's Exhibit 199 for identification, page 61. Are you acquainted with Mr. Rothbart's book?

A. Yes, I am.

• • • • • • •

[fols. 2310-2311] Q. Is it your opinion that Prof. Rothbart is indicating as you have so testified here in his book?

A. Yes.

• • • • • • •

[fol. 2312] Q. I would like for you to look at Defendant's Exhibit 113 and I ask you whether in your opinion the cam follower is offset there.

A. Yes, it appears as though there is a slight offset in the nature of the follower of this machine. It isn't much, but there does seem to be some.

• • • • • • •

[fol. 2313] Q. Does the fact that there is the slight offset indicate anything to you as to the existence or non-existence of substantial pressure angle problems in the cam that is on the machine?

• • • • • • •

[fol. 2314] A. It would seem to me that since there is very [fols. 2315-2319] little offset in this cam follower, that in the event there was relief sought in terms of reducing the pressure angle, this could have been done by increasing the offset.

Q. Have you looked at the Singer 401 follower?

A. Yes, I have.

Q. Is that offset?

A. Yes, that is definitely offset.

Q. To a degree greater or less than the machine before you?

A. This is noticeably more offset.

• • • • • • •

Cross examination.

By Mr. Weinstein:

• • • • • • •

[fol. 2320] Q. Is it true that certain stitch patterns could [fol. 2321] not be reproduced solely because of critical pressure angles?

A. By examining the machines that I have examined, it does not seem to me that the designer was prevented from duplicating whatever stitch pattern he wanted because of a pressure angle problem.

Q. Stitch pattern on the cam?

A. Whatever stitch pattern appears on the machine.

Q. But certain stitch patterns could not be reproduced if the designer chose to put them there because of the factor of pressure angle, would that not be true?

A. I don't know what kind of stitch patterns would be so restrictive as to prevent the design of a workable cam in any of these machines.

Q. Isn't it true that some cam designers start out their design plans by fixing a maximum pressure angle and then design the other cam factor subsequent to that first factor of being fixed?

A. Yes, I think that is so.

Q. If that is true, isn't it true that if you fix the maximum pressure angle on a given cam and you have a certain space limitation in a machine, that in order to reproduce [fols. 2322-2328] some stitch patterns you either have to reduce the number of cams on the annular disk or increase the amplification mechanism?

A. I don't see this as a real restriction in the sense that you have other factors that are controllable to offset this difficulty. You have the factor of, for instance, putting the least difficult pattern on the inside. You have the factor of the amplification of the linkage. You have the factor of the offset of the cam, of whether it be transverse or whether it be rotary. With all of these factors, and for the sizes that I see before me, these are not so small that they would preclude the possibility of designing an absolutely workable cam for these machines.

* * * * * * *

[fols. 2328a-2349] Reporters' Certificate to foregoing transcript omitted in printing.

* * * * * * *

[fol. 5768] In United States District Court

Court's Exhibit 4

United States District Court, Southern District of New York

Civil Action No. 154-108

United States of America, Plaintiff

against

The Singer Manufacturing Company, Defendant

Stipulation

It Is Stipulated and Agreed that:

1. In each of Italy and France

(a) the scope of the grant secured by Letters Patent in each such country is determined by the total disclosure of the patent document.

(b) the claims or resumé appearing at the end of the patent document are merely the patentee's brief summary of his invention as set forth in the patent document.

(c) the claim or resumé has no legal effect whatever.

(d) the validity and scope of the patent grant are determined by the Court, in a nullity action or in an infringement action in which there is a cross-action for nullity. The Court compares the total disclosure of the patent document to the prior art furnished the Court by the adverse party and determines the extent of the invention's advance over the prior art.

(e) the nullity proceedings referred to in (d) above [fol. 5769] are *ad hoc in personam* proceedings and are determinative only as between the parties. Other parties would have to go through the same proceedings if their rights vis-a-vis the patents were to be determined.

(f) in all such proceedings the Courts construe the scope of the patent with respect to the subject matter

of the litigation. Attacks on such patents only result in determinations as between the parties and the patents stand in all other respects for similar determinations of their scope and validity vis-a-vis other parties.

2. In Germany and Brazil there is a rebuttable presumption of validity of the patent. The validity is attacked in a nullity proceeding in which proceeding the Patent Office or Court is not bound to accept the scope of the claims of the patent as issued and is at liberty to, and frequently does, redefine the precise scope of the patent claims in its decision. Moreover, in infringement actions the Court may, and frequently does, redefine the scope of the patent claims.

3. In Great Britain there is a rebuttable presumption of validity of the patent. The validity may be attacked in a nullity proceeding and, although the Court never broadens the claim of a British patent, in nullity as well as infringement actions, it may, and frequently does, limit the scope of the claim depending upon the necessity shown by the [fols. 5770-5786] prior art.

Dated: New York, New York, May 16, 1961.

William J. Elkins, Attorney for Plaintiff. Winthrop, Stimson, Putnam & Roberts, By Arthur E. Pettit, a Member of the Firm, Attorneys for Defendant.

So Ordered: May 16th, 1961.

Sylvester J. Ryan, Chief Judge.

[fol. 5787] IN UNITED STATES DISTRICT COURT

COURT'S EXHIBIT 7

UNITED STATES DISTRICT COURT, SOUTHERN DISTRICT OF NEW YORK

Civil Action No. 154-108

UNITED STATES OF AMERICA, Plaintiff,

v.

THE SINGER MANUFACTURING COMPANY, Defendant.

MEMORANDUM IN AID OF THE COURT

Index to this Memorandum

I. Short Statements Setting Forth Invention or Priority Date, Filing and Issue Dates, and Fundamental Coverage of Each of the Following Patents:

Patent	Page of this Memorandum
Gegauf (1) 2,832,302	1
Harris Reissue 24,370	1–2
Johnson 2,862,468	2
Vigorelli 2,906,219	2
Gegauf (2) 2,877,726	2–3
Perla 2,810,360	3

II. Short Statement Setting Forth Priority Date, Filing Date, Date of Last Rejection of Application by United States Patent Office, Date of Abandonment of Application, and Fundamental Subject Matter of the Following Patent Application:

Application	Page of this Memorandum
Messerschmitt Application No. 548,481.	3–4

Dated: New York, New York, May 23, 1961.

Winthrop, Stimson, Putnam and Roberts, By Arthur E. Pettit, A Member of Said Firm, Office and Post Office Address, 40 Wall Street, New York 5, New York.

[fol. 5788] I. Short Statements Setting Forth Invention or Priority Date, Filing and Issue Dates, and Fundamental Coverage of Each of the Following Patents.

Plaintiff's Exh. No. 174

Gegauf (I) United States Patent 2,832,302, April 29, 1958.

This patent was filed in the United States on May 29, 1953 claiming a priority based upon a corresponding Swiss patent filed in Switzerland on May 31, 1952. (Paragraph 36 of Statement of Facts).

The Gegauf (I) patent covers, inter alia, a mechanism comprising a series of rotary cams having a common axis and a single retractable cam follower, shiftable relative to each other lengthwise of the common cam axis, in order to select a particular cam for controlling the lateral needle movement. (Claim 1).

Plaintiff's Exh. No. 172

Harris United States Reissue Patent 24,370, October 8, 1957.

This Harris reissue patent constitutes a reissue of Plaintiff's Exh. No. 170

Harris United States patent No. 2,693,778 dated November 9, 1954 and filed June 9, 1952. This reissue patent was filed on June 16, 1955. (Paragraphs 27 and 28 of Statement of Facts).

Claim 5 of Harris reissue patent covers a mechanism as defined in claim 1 of Gegauf (1) and which in addition includes, inter alia, a series of rotary cams and a single cam follower with the *cams being shiftable* lengthwise of their common axis so as to be individually presented to the cam follower.

Claim 6 of Harris reissue patent covers a mechanism as defined in claim 1 of Gegauf (1) and which in addition includes, inter alia, a constantly rotating eccentric connecting the single cam follower with the needle.

[fol. 5789] Claim 7 of Harris reissue patent covers a mechanism as defined in claim 1 of Gegauf (1) and which in addition, includes, inter alia, a horizontal reciprocat-

ing rod adapted to be mounted in a sewing machine frame and having a knob formed on its exposed end whereby such rod may be employed to withdraw the single cam follower from the series of rotary cams.

Plaintiff's Exh. No. 183

Johnson United States Patent No. 2,862,468, December 2, 1958.

The Johnson patent was filed on November 29, 1954 and covers an invention made by R. E. Johnson on April 29, 1953. (Paragraph 17 of Statement of Facts).

The Johnson patent covers, inter alia, a mechanism for forming zigzag stitch patterns by the combined action of a plurality of rotary cams and means to select different pluralities of such cams. (Claim 1).

Plaintiff's Exh. No. 185

Vigorelli United States Patent No. 2,906,219, September 29, 1959.

Plaintiff's Exh. No. 186

This Vigorelli patent was filed in the United States on November 23, 1953 claiming the priority date corresponding to Italian patent filed in Italy on January 28, 1953.

The Vigorelli patent covers, inter alia, a mechanism comprising a series of rotary cams mounted upon a common cam shaft, which is adapted to be removably supported within a sewing machine frame, a single retractable cam follower shiftable lengthwise of the common cam shaft in order to select a particular cam for controlling the lateral needle movement and with each cam being removable individually from such cam shaft. (Claim 1).

Plaintiff's Exh. No. 177

Gegauf (II) United States Patent No. 2,877,726, March 17, 1959.

Plaintiff's Exh. No. 178

This Gegauf (2) patent was filed on December 2, 1957 and constitutes a division of the above mentioned Gegauf (1) patent No. 2,832,302.

[fol. 5790] The Gegauf (2) patent covers, inter alia, a

mechanism comprising a series of rotary cams with each cam being provided with its own cam follower constrained to engage its associated cam only whereby any such cam may be individually selected for controlling the lateral needle movement. (Claims 8 and 18).

Plaintiff's Exh. No. 179

Perla United States Patent No. 2,810,360, October 22, 1957.

This patent covers an invention made by Perla on May 10, 1954. (Paragraph 19 of Statement of Facts).

The Perla patent covers, inter alia, a mechanism, comprising a series of rotary cams with each cam being provided with its own cam follower constrained to engage its associated cam only and with each follower having its own actuating handle whereby any such cam may be individually selected by its associated handle for controlling the lateral needle movements. (Claim 3).

II. Short Statement Setting Forth Priority date, Filing date, date of Last Rejection of Application by United States Patent Office, date of Abandonment of Application, and Fundamental Subject Matter of the Following Patent Application.

Plaintiff's Exh. No. 181

Messerschmitt United States Patent Application Serial No. 548,481.

Plaintiff's Exh. No. 181

This application was filed by Messerschmitt on November 22, 1955 claiming the priority dates of two corresponding German patents filed respectively on November 25, 1954 and July 13, 1955.

The Messerschmitt application disclosed and originally claimed, inter alia, a multiple cam needle controlling mechanism like that of the Perla patent supra.

Additionally, the Messerschmitt application originally disclosed and claimed a mechanism which included, inter alia, a second series of rotary cams and cam following [fol. 5791] means for controlling the amplitude and direction of a sewing machine work-feeding mechanism in accordance with the shape of a selected one of the cams.

Subsequent to an interference between this application and the Perla application, supra, and the acquisition of such Messerschmitt application by Singer, priority was conceded to Perla on the part of the application relating to the multiple cam needle controlling mechanism.

Singer thereupon prosecuted those claims relating to the multiple cam feed control mechanism.

After five and a half years of prosecution and four Patent Office rejections, of which the last was dated November 4, 1960, Singer, on May 4, 1961, abandoned the application.

[fol. 5792] IN UNITED STATES DISTRICT COURT

COURT'S EXHIBIT 8

UNITED STATES DISTRICT COURT, SOUTHERN DISTRICT OF NEW YORK

Civil Action No. 154-108

UNITED STATES OF AMERICA, Plaintiff,

v.

THE SINGER MANUFACTURING COMPANY, Defendant.

MEMORANDUM IN AID OF THE COURT

Index to This Memorandum

Short Statements Setting Forth the Legal Status of Each of the Following Patents Vis-A-Vis one another:

Patent	Sections of This Memorandum
Gegauf (1) 2,832,302	1, 3
Harris Reissue 24,370	1
Johnson 2,862,468	1, 3
Vigorelli 2,906,219	1, 3
Gegauf (2) 2,877,726	2
Perla 2,810,360	2, 3

Dated: New York, New York, May 23, 1961.

Winthrop, Stimson, Putnam and Roberts, By Arthur E. Pettit, A Member of Said Firm, Office and Post Office Address, 40 Wall Street, New York 5, New York.

[fol. 5793] Short Statements Setting forth the Legal Status of each of the Following Patents Vis-a-Vis one Another

1. Gegauf (1) patent No. 2,832,302 claims the concept basic to each of the mechanisms *disclosed* and *claimed* in each of the following patents:

Harris Reissue No. 24,370
Johnson No. 2,862,468
Vigorelli No. 2,906,219

This concept includes, inter alia, the idea of a mechanism comprising a series of rotary cams having a common axis and a single retractable cam follower, shiftable relative to each other lengthwise of the common cam axis, in order to select a particular cam for controlling the lateral needle movement.

Thus, each of the mechanisms *disclosed* and *claimed* in each of the Harris Reissue, Johnson and Vigorelli patents, supra, infringes one or more claims of Gegauf (1) patent, including in each instance claim 1.

Examples of claims of the Harris Reissue, Johnson and Vigorelli patents which include, inter alia, the basic concept of Gegauf (1) are noted below:

Harris Reissue claims 5, 6 and 7
Johnson claim 7
Vigorelli claim 1

Harris Reissue claims 1 to 4, inclusive, came from the parent Harris patent No. 2,693,778 and do not relate to a multiple cam mechanism.

Each of the Harris Reissue claims 5, 6 and 7 includes, inter alia, all of the elements of claim 1 of Gegauf (1), [fol. 5794] supra. Therefore, any mechanism which infringes any one of the Harris Reissue claims 5, 6 or 7, must also infringe claim 1 of Gegauf (1).

2. Gegauf (2) patent No. 2,877,726 claims the concept basic to the mechanism *disclosed* and *claimed* in the Perla patent No. 2,810,360.

This concept includes, inter alia, the idea of a mechanism comprising a series of rotary cams with each cam being provided with its own cam follower constrained to engage

its associated cam only whereby any such cam may be individually selected for controlling the lateral needle movement.

Thus, the mechanism *disclosed* and *claimed* in the Perla patent infringes one or more claims of Gegauf (2) patent, including claim 18.

Claim 3 of Perla patent is an example of a claim which includes, inter alia, the basic concept of Gegauf (2).

3. Johnson patent No. 2,862,468 claims a concept ancillary to the basic concept of Gegauf (1), which ancillary concept is found in each of the mechanisms *disclosed* and *claimed* in Perla patent No. 2,810,360 and as *disclosed* in Vigorelli patent No. 2,906,219.

This ancillary concept includes, inter alia, the idea of a mechanism for forming zigzag stitch patterns by the combined action of a plurality of rotary cams and means to select different pluralities of such cams.

Thus, each of the mechanisms *disclosed* and *claimed* in the Perla patent and as *disclosed* in the Vigorelli patent infringes one or more claims of said Johnson patent, including in each instance claim 15.

Claim 1 of Perla patent is an example of a claim which [fols. 5795-5802] includes, inter alia, the above noted concept claimed in the Johnson patent.

[fols. 3427-3437] IN UNITED STATES DISTRICT COURT

GOVERNMENT'S EXHIBIT 2 (S-1)

April 26, 1955.

M. L. Waterman, Esq., Vice-President,
The Singer Manufacturing Company,
Singer Building, New York.

Dear Mr. Waterman:

Modified Vigorelli Model ZZ/A Zigzag Machine (Bed-Plate No. 510,972).

We have been asked to conduct the usual patent investigation relative to the subject machine in order to determine whether or not it infringes the claims of any unexpired Singer-owned patents.

The present machine is a modified version of the Vigorelli Model ZZ/A zigzag machine (a specimen of which carries bed-plate No. 501,701) which formed the subject of our prior report of October 28, 1953 (53 P.S. 474) to Mr. W. A. Davidson, which report was entitled "Vigorelli Model ZZ/A Sewing Machine Manufactured in Italy." The early Model ZZ/A zigzag machine is particularly characterized by the fact that it includes a rotary pattern cam mechanism adapted to impart selective lateral zigzag movements to the needle, which mechanism includes a removable unitary nest of stacked rotary pattern cams of which only a single cam can be selected by the operator for the purpose of effecting a predetermined pattern of ornamental zigzag stitches.

The later Model ZZ/A machine differs from its prede- [fol. 3438] cessor in that it is provided with a cam follower element which is adapted not only to engage any single selected cam but it is provided with a modified shifting means for positioning the follower to cooperate with any pair of adjacently disposed cams so as to effect the superimposition of the profiles of the two cams and thereby increase the number of available stitch patterns that the machine can produce.

The mechanism of the later Model ZZ/A machine is

illustrated and claimed in three unexpired Vigorelli-owned Italian patents noted hereinbelow:

No. 464,088, Apr. 29, 1950,
No. 497, 557, Sep. 15, 1954,
No. 507,862, Jan. 3, 1955.

As set forth in our above noted prior report, the manually controllable means for varying the needle amplitude and needle bight of the early Model ZZ/A machine infringes the French patent and the British patent listed hereinbelow, which patents are unexpired and owned by this Company:

British No. 416,619, Nov. 21, 1933,
French No. 784,641, Jan. 24, 1935.

Since the later Model ZZ/A machine utilizes the same needle amplitude and bight control means as the early Model ZZ/A machine, it also would infringe our above noted two patents.

These two patents correspond to the Company's expired [fol. 3439] U.S. patents of Tiesler No. 2,014,916 and Eames No. 2,005,673.

No other unexpired Singer-owned patents are infringed by the later model Vigorelli machine. However, this Company's U.S. patent application of Johnson, Serial No. 471,766, filed November 29, 1954, covering the Experimental 282 machine contains claims which, if allowed, might be infringed in the United States by the later model Vigorelli ZZ/A machine. At the present moment we cannot predict whether the broad claims of this U.S. application will be finally allowed for there is much patent activity in the field of zigzag stitch ornamental machines. We do know that the subject matter of the Experimental 282 machine was developed prior to the filing date (September 29, 1953) of Italian patent No. 507,862, which patent discloses and claims the pattern cam subject matter which is common to the later model Vigorelli ZZ/A machine and the Experimental 282 machine. On this basis, it would appear that, in the United States at least, our patent application covering the Experimental 282 machine would, as opposed to any

United States Vigorelli patent application, have the right to contain the broad and dominating claims.

Yours very truly, The Singer Manufacturing Company, Patent Department.

In triplicate.

CC: Mr. A. W. Reiner, Mr. J. G. Stanford, Europe.

[fol. 3440] In United States District Court

Government's Exhibit 3

Memorandum—CAW-Z—June 16, 1955

The Purchase by Singer of the U.S. Carl Harris Patent No. 2,693,778 and the Foreign Patents and Patent Applications Corresponding to such Patent.

In an attempt to destroy or to limit the scope of the Italian Vigorelli patents Nos. 497,557 and 507,862, filed respectively in Italy on Jan. 28, 1953 and Sep. 29, 1953, we conducted a patent investigation which developed U.S. Harris patent No. 2,693,778 disclosing a Class 107W type sewing machine modified by the addition thereto of a plurality of rotary cams and means for selectively connecting the needle-bar with any one of these cams so as to produce a predetermined pattern of zigzag stitching. The claims of the Harris patent, however, do not relate specifically to the multi-cam mechanism but rather to the specific form of an eccentric adjusting mechanism which is incorporated in the Harris machine. These claims do not dominate our Class 282 or Experimental 1040 machines nor any of the existing family-type automatic zigzag machines made and sold by our competitors. However, it would appear that the Harris patent disclosure could support claims which broadly call for a multi-cam mechanism and cam selector means in a manner such as to read upon many of the existing types of automatic multi-cam zigzag machines including our Class 282 and Experimental 1040 machines as well as the Vigorelli and Brother machines.

[fol. 3441] Since the U.S. Harris patent has been issued for less than two years, it might be possible to reissue such

patent and acquire broadened claims that would cover the multi-cam mechanism. If it is not ultimately possible to obtain such broadened claims the filing of a reissue patent application might precipitate a patent interference proceeding between the Harris reissue application and any other pending U.S. patent application containing claims of like scope. Since the Harris patent application was filed in the United States Patent Office on June 9, 1952, a date prior to, for example, the earliest filing date of any of the known Vigorelli zigzag patent applications, it would appear that the Harris patent application would be awarded the claims involved in the interference on the grounds of its prior filing date. Further, even if such an interference were not declared between Harris and any of the U.S. pending patent applications containing similar multi-cam mechanisms for the reason that the Patent Office does not consider claims of such scope to be patentable, the prosecution of such claims before the Patent Office and the final rejection thereof would be a good indication that no one else would be awarded claims of such scope by the United States Patent Office.

[fols. 3442-3445] Thus, it appeared highly desirable for Singer to acquire all rights in the United States Harris patent particularly in view of the patent situation surrounding the Class 282 and Experimental 1040 machines.

• • • • • • •

[fol. 3446] It further developed that Harris had two inventions of which the first is illustrated in the subject U. S. patent as well as in the following corresponding foreign patents and patent applications:

French Patent No. 1,083,582, (Patent Application Serial No. 649,367, filed June 5, 1953

Belgian Patent No. 520,285, (Patent Application Serial No. 407,473, filed May 28, 1953)

Italian Patent No. 509,535, (Patent Application Serial No. 69/86, filed June 5, 1953)

British Patent No. 730,436, (Patent Application Serial No. 14367, filed 1953)

German Patent Appl. No. 16,599, filed June 3, 1953

Canadian Patent Appl. No. 632,086, filed June 6, 1952

Swedish Patent Appl. No. 5,211, filed June 5, 1953
Japanese Patent Appl. No. 10,103, filed June 5, 1953

[fol. 3447] The second Harris invention does not relate to the multi-cam operated mechanism of the first invention but rather to a Class 107W type sewing machine fitted with two rotary cams which may be alternatively connected with the needle-bar for the purpose of producing a selected stitch pattern. This second invention is covered by U.S. patent application of Harris, Serial No. 328,059, filed December 26, 1952, and Canadian patent application of Harris, Serial No. 640,695, filed December 23, 1952. This second invention was combined with the first invention in each of the above noted French, Belgian, German, Italian, Swedish, Japanese and British patent applications. It was apparent that the second invention was of little interest to Singer.

It soon appeared from our discussion that Harris would be agreeable to sell his patents and he stated that he would like to receive $25,000 for his entire group of patents, both U.S. and foreign. He was advised that this figure was too high particularly in view of the fact that his patents did not claim subject matter in which we were interested and that in order to make these patents of value to us we would have to reissue them. In order to effect a deal with Harris I then offered to purchase his U.S. and Canadian patent rights to his first invention as well as all of his combined European and Japanese foreign patent rights leaving to him the U.S. and Canadian rights in his sec-
[fols. 3448-3450] ond invention. Harris was willing to go along with this suggestion but asked a price of $15,000 for this patent package. At this point I closed the meeting and suggested that since this figure was too high for my client we would forget the entire deal but that if Mr. Harris should decide to accept the reasonable figure of $8,000 he could call me at 9 o'clock the next morning.

Promptly at 9 A.M. Friday morning, Mr. Harris called me at the hotel and advised that he was willing to accept the offer whereupon I suggested that he meet me at Andre Forget's office at 11 A.M. I called Mr. Gowling in Ottawa by telephone and asked him to arrange to have available funds in the amount of $8,000 (Canadian dollars). There-

after I went immediately to Andre Forget's office at 360 St. James Street, West, Montreal, where I acquired the services of a stenographer and prepared fresh assignment papers which would cover the arrangements as tentatively made with Harris. Harris arrived upon the scene and being confronted with the new assignment papers demurred and stated that he had changed his mind about selling to us any foreign rights other than the Canadian. However, after much discussion, Harris executed the assignment papers as well as the application for reissue of the Harris U.S. patent and at the same time turned over to me his original U.S. patent together with the above noted Belgian and Italian patents.

* * * * * * *

[fol. 3451] IN UNITED STATES DISTRICT COURT

GOVERNMENT'S EXHIBIT 4

Received Patent Department, September 13, 1955,
Answered—.

September 12, 1955.

Mr. W. P. Evans,
18 Via Dante,
Milan, Italy.

Dear Mr. Evans,

I would like to refer further to your letter of August 30th on the Vigorelli matter. There are certain new developments which cause us to feel that the time has probably arrived when we should take some action.

In my letter of August 16th I commented that it was probable that we might become involved in litigation with Vigorelli in Italy or elsewhere. For that reason it seemed to be desirable to try to talk matters over with them to find some basis of agreement that would be mutually advantageous, rather than to litigate. At that time we did not know that involvements in litigation would come as soon as it has come. Late in August we received word from our people in Brazil that application had been made

by Vigorelli for a Brazilian patent based on very broad claims. Under Brazilian procedure it was absolutely essential that we file opposition to this application within the time limit of the 2nd of September. We accordingly sent instructions by cablegram and in order that you may more fully understand the situation, I enclose a copy of the subsequent letter in which the Patent Department gave Mr. Mayer in Brazil information concerning prior invention which would enable our attorneys in Brazil to prosecute our opposition to the patent application. I am aware that Brazilian procedure in this respect is quite different from Italian procedure but I believe that you are conversant with the procedure under which the merits of a [fol. 3452] patent application are fought out in the Patent Office prior to the issuance of a patent.

Vigorelli's representative in Brazil will doubtless be informed by the Brazilian Patent Office in due course that Singer has entered this opposition and at a somewhat later date they will also learn from the Patent Office the grounds on which our opposition is based.

Unless we are able to come to some agreement with Vigorelli, we will of course institute proceedings in Italy in due time, seeking to invalidate such patent as Vigorelli has received and we will do the same thing in France and other countries in accordance with the proper procedure in each country. This litigation will undoubtedly result either in the cancelling of their patent and patent applications, or at any rate, severely limit the claims. On the other hand, if we were to refrain from instituting such proceedings and if we were to withdraw the Brazilian opposition, their applications might develop into rather broad patents which would have a dominating position in the industry. We ourselves hold some patents and have patent applications pending which would make trouble for Vigorelli if we were engaged in litigation with them, or which would greatly strengthen and broaden the patent situation if our position and theirs could be pooled by some mutual agreement.

All of this leads us to believe that we should not defer any longer our proposed discussions with Vigorelli concerning the whole situation. In the light of the foregoing I am writing to offer the following suggestion. I suggest

that you arrange to have an interview with whomever you would regard as the most influential person in Vigorelli. At that interview you could tell them that you had been advised by your New York associates that we had con-[fol. 3453] templated discussing patent matters with Vigorelli when one or more of us familiar with the situation might be in Europe this fall; that the reason for our intention to confer with Vigorelli was that we felt that their patent claims and ours might very well develop certain conflicts but that instead of waiting for these conflicts to arise, we were disposed to discuss the situation with them to see whether something of mutual advantage might not be worked out which would strengthen the position of both organizations, rather than have each of us seeking to knock out the patent claims advanced by the other. You would then go on to say that you had received word from New York that the Brazilian application of Vigorelli had necessitated the filing of an opposition by Singer in that country, the effect of which would be to knock out or seriously limit any Brazilian patent, and that we had asked you to tell Vigorelli that they should not look upon the filing of this opposition in Brazil as indicating any desire on our part to litigate these things in a mutually destructive manner but that if Vigorelli would be interested in exploring the possibility of some mutually beneficial arrangement, we would arrange to have one of our people from New York confer with them this fall. (It is pretty well known that it is customary for more than one Singer person from New York to be in Europe between now and the end of the year and there is no need to give the impression that someone would be sent to Italy solely for the purpose of holding such a conference."

Frankly, I would like to have your views with respect to such an approach. I cannot help but feel that it would be desirable to arrange a meeting with Vigorelli and have them know that we are approaching them in a friendly spirit, to see whether some mutually advantageous arrangement cannot be worked out. It seems to me that the fact that we have been forced to file this opposition proceeding [fol. 3454] in Brazil gives us the very best reason for approaching them now in a friendly manner, rather than sitting back and hoping that the Brazilian situation will

bring some overtures from them. In any conversation with Vigorelli such as I have outlined, you of course would not discuss any details of the patent situation or even indicate that you have any knowledge as to the grounds that we are relying upon in filing an opposition proceeding in Brazil. You might also tell them that we were also opposing a multi-cam patent application filed by another party in Brazil and that patent applications were also beginning to show up from other parties in several countries. They may well be aware of this but it emphasizes the desirability of compromise instead of litigation. All that we want to know now is whether they would be interested in talking to our representative and exploring the whole situation with a view to possibly finding something of mutual benefit. If you are in agreement and believe that an approach such as outlined might well be successful, we will probably cable saying to go ahead, and in that case we would want to try to set up a meeting for some time the latter part of October or in the first week in November. If we are going to have this conference, it is probably better to have it sooner rather than later, as the whole situation is moving rather rapidly.

Yours very truly, M. C. Lightner

Enclosure.

Copy to Mr. Waterman, Mr. Stanford.

[fol. 3455] IN UNITED STATES DISTRICT COURT

GOVERNMENT'S EXHIBIT 5

September 9, 1955.

M. C. Lightner, Esq., President,
The Singer Manufacturing Company,
Singer Building, New York.

Dear Mr. Lightner:

I am returning herewith the draft of your letter to Mr. Evans. After going over it very carefully, I feel that it fully covers the situation and that no changes should be made.

Yesterday in discussing this matter with you I believe that I failed to mention that we were opposing a patent application directed to the multi-cam arrangement filed by Brutsch & Co. in Brazil and also that Husqvarna had comparable patent applications pending in certain foreign countries. With this in mind you may feel that it is desirable to add a further paragraph to your letter to the effect that it might be well for Mr. Evans to tell Vigorelli that we have definite knowledge that at least two other well-known sewing machine companies are attempting to acquire in many foreign countries patent claims which would adversely affect Vigorelli as well as ourselves and that perhaps Vigorelli and Singer, standing together rather than apart, could more effectively prevent these other firms from acquiring claims which might be detrimental to both Singer and Vigorelli.

[fols. 3456-3458] The above thought is to acquaint Vigorelli fully with the fact that they may not be first in the field and that perhaps Singer might be in a position to render them valuable assistance.

Yours very truly,——

Enclosure—Draft

CC: Mr. M. L. Waterman.

[fol. 3459] In United States District Court

Government's Exhibit 8

Received Patent Department, October 14, 1955, Answered—

Compagnia Singer Per Macchine Da Cucire
Societa Italiana Per Azioni
Sede Milano—Stabilimenti Monza
Capitale Sociale Lit. 1.500.000.000

Milan 10th October, 1955.

M. L. Waterman Esq.,
149 Broadway
New York, 6

Dear Mr. Waterman,

As advised in our letter of Sept. 24th, Dr. Lando attended the Bologna Fair on Oct. 6th and had no difficulty in finding a suitable opportunity for broaching with Mr. Vigorelli the question of the patent situation in Brazil.

Mr. Vigorelli was completely unaware of the opposition made to his patent. He stated, and has since confirmed, that he no longer has any connection with the Vigorelli Brazilian concern other than receiving a royalty on the machines produced there. He has also mentioned that it is a year since he has received any correspondence from Brazil.

Dr. Lando limited himself on that occasion to saying that as a result of an application for registration of a Vigorelli patent in rather wide terms the Singer Company had been compelled to make opposition. Vigorelli commented that he did not understand the reason for such opposition in Brazil and not, for instance, in U.S. and in Germany where his patents had already been deposited. He readily accepted the suggestion of a further discussion and came to see us in Via Dante the following day (Oct. 7th).

Since it appeared from the outset that Mr. Vigorelli did not have a precise idea as to which of his patents was still pending in Brazil and—purposely or otherwise—was rather vague about the whole business, we did not enter into too

many details. There is no doubt that Vigorelli has a shrewd idea as to the purpose of our action especially as he went on to mention negotiations which have been proceeding for a long time between himself and the Bernina Company. It appears that the Bernina Company deposited a patent for a device involving a plurality of cams in a small number of countries some considerable time before the Bernina machine appeared on the market. Vigorelli's patent is post-dated to that of Bernina but his machine appeared before Bernina's and his patent covers a considerably larger num-[fol. 3460] ber of countries. Vigorelli stated that he has always been on excellent terms with the Bernina Company and that these negotiations are being carried on in a very amicable spirit.

Mr. Vigorelli expressed his satisfaction that the Singer Company of New York had thought of consulting with him in a friendly way over this conflict of patent interests and expressed himself as only too happy to meet one of your representatives at any time convenient to yourselves.

You know, of course, that Vigorelli was a former employee of the Necchi Company where he rose to the position of Sales Manager (in the early thirties) before breaking away and starting on his own. His heart has not been too good in recent months and he usually takes a long week-end rest at the sea-side.

Mr. Vigorelli's patent agent is Franco Cicogna & Co., 16 Via Visconti di Modrone, Milan.

We beg to confirm our cable of the 7th and have promised to inform Vigorelli as soon as we hear when a representative from New York will be coming this way.

> "Following friendly encounter here Vigorelli very agreeable meet your representative any date before middle November to explore situation stop Vigorelli was unaware your action Brazil stop Friendly negotiations currently proceeding between Vigorelli and Bernina regarding latter's prior patent covering plurality cams."

Yours very truly, W. P. Evans, Compagnia Singer, per Macchine da Cucire.

cc: Mr. M. C. Lightner 10/13

Mr. J. G. Stanford 10/13

[fol. 3461] IN UNITED STATES DISTRICT COURT

GOVERNMENT'S EXHIBIT 9

Received Patent Department, October 17, 1955, Answered—October 14, 1955.

W. P. Evans, Esq.
Milan, Italy

Dear Mr. Evans:

Your cable of the 7th and your letter of the 10th have been received, and I was pleased to learn that Mr. Vigorelli is agreeable to a friendly conference concerning possible conflict of patent interest.

It has been arranged that Mr. Stanford will arrive in Milan via K.L.M. on Monday afternoon, October 31. He would like to spend some time going over the general patent situation in Italy preparatory to discussions with Vigorelli and I would suggest Friday, November 4 be set as the date for the first conference with Vigorelli.

On Thursday morning November 3rd I will arrive in Milan via T. W. A. You will be informed of the exact time of my arrival as well as that of Mr. Stanford at a later date.

We are quite interested in the fact that Vigorelli has been negotiating with Bernina concerning patents on multiple cam machines. We know that Brutsch has filed patent applications in a number of foreign countries for a multiple cam machine and that the Brutsch applications were filed prior to the Vigorelli patent applications. Although our Patent Department feels that its records are complete on this subject and that it has knowledge of all patents that have been issued and of all the machines of this kind that have appeared in recent years, it has not been able to locate a patent or a patent application in the name of Bernina or Gegauf for a multiple cam machine. This latter fact, however, you should consider as confidential.

It would be extremely helpful if we could have exact information concerning the patent protection which forms the basis of the discussions now going on between Bernina and Vigorelli before our departure from the States and thus permit a study of it. If it is possible for you to do so

when you approach Vigorelli to set the date for our conference and the opportunity presents itself unobtrusively and without any degree of emphasis we would suggest that you [fol. 3462] try to learn the country and the patent or patent application number which forms the basis of the discussions now going on between Vigorelli and Bernina.

Yours very truly, M. L. Waterman, Vice President.

cc: Mr. M. C. Lightner, Mr. J. G. Stanford.

[fol. 3463] In United States District Court

Government's Exhibit 10

Translation

Dr. E. Wiegand, München.
Dipl. Ing. W. Niemann, Hamburg
Patent Agents

Hamburg 1, November 14th, 1955.
Ballindamm 26

To
Singer Nähmaschinen
Aktiengesellschaft
Frankfurt-Main 1
Gutleutstr. 42-44
By Express
W. 15964/55 DrEW/H.

Re: Zigzag Sewing Machines with a Multiple Number of Cams

Referring to the conference with Mr. Stanford and Mr. Krüger on the 7th inst. I beg to report that I have discussed the matter in detail with the competent examiner for Class 52a. In doing so it was found that the examiner did not know any better material than that known to us.

The examiner was extremely pleased to get knowledge of the American Patent No. 88 282. He also took a note of the British Patent 19 184 1908 and the copy of the German Patent 219 187 which I submitted. The latter two

patent copies were already known to the examiner somehow.

As you know there is no possibility to obtain information at the Patent Office on pending patent applications. One has to wait and watch whether corresponding patent applications will be published.

According to my personal conception the situation is the following:

The Gebrauchmuster 1 707 338 was registered by Gegauf Bernina on account of a corresponding auxiliary (eventual) Gebrauchsmuster application. The corresponding patent application has not been published yet, it may be assumed that it is just about to be published. After the examiner has now got knowledge of the American Patent 88 282 and has shown great interest in it, he will presumably oppose same to the patent application of Gegauf and possibly express the idea that there is no longer any patentable remainder.

[fol. 3464] The conference at Frankfurt on Main has already shown that the situation in the section in question here is very complicated on account of numerous applications. I believe that the situation is more complicated yet than the present result of the searches of Mr. Stanford shows. Possibly there are existing in the section in question here also applications of German firms which should be considered. I can imagine for instance that Phoenix and Messerschmitt likewise have applications pending which might be of interest to you. It appears advisable therefore that the corresponding publications of Phoenix and Messerschmitt are also watched abroad.

Finally it appears to me proper also to keep on watching the publications in Italy, because it does not appear to me to be out of question that there has also another Italian applicant been active in this section and has filed a corresponding patent application in Italy with the priority of which possibly a patent application has been filed in Germany too.

The above are only assumptions of mine arrived at on account of a general consideration of the matter, but they might possibly also give a hint how to supplement your searches.

The copy of the details of the Gebrauchsmuster 1 707 338 I am returning herewith.

Yours very truly, sgd. Dr. Ernst Wiegand.

Enclosure.

cc: Messrs. Cruikshank & Fairweather.

[fol. 3465] Tuesday.

Chet—

Been trying to write for 3 days—now sitting in C&F office while they look for file.

Vig. claims or states that Bernina has filed an application in the U.S. corresponding to their early filed Italian patent. If this be so, maybe Harris Reissue should not be pushed too fast! Something to think about.

Fairweather tells me our British opposition against Vig. would have failed. I'm glad we have agreement.

Regards, J. B.

Will catch Queen Mary of Friday—I hope. (Written on knee no other place to write.)

[fol. 3466] In United States District Court

Government's Exhibit 11 (S-2)

Documents

Agreement (Patent) between The Singer Manufacturing Company of New Jersey and Arnaldo Vigorelli, of Italy.

Dated: February 17, 1955.

Accordo in data 17 Novembre 1955 fra "The Singer Manufacturing Company" (qui in appresso chiamata "Singer"), una Società legalmente costituita secondo le leggi dello Stato di New Jersey, e "Arnaldo Vigorelli

Agreement dated as of November 17, 1955, between The Singer Manufacturing Company (hereinafter called "Singer"), a Corporation organized and existing under the laws of the State of New Jersey, and "Arnaldo Vigo-

S.p.A." (qui in appresso chiamata "Vigorelli"), una Società legalmente costituita secondo le leggi italiane, per sè e per i rispettivi cessionari.

1) Singer non intraprenderà alcuna azione il contraffazione contro Vigorelli in base a qualsiasi diritto derivante da brevetti già concessi o che verranno concessi in ogni paese, azione nei riguardi di elementi descritti e illustrati nei brevetti italiani n.497.557 e n.507.862 e quando incorporati in macchine da cucire [fol. 3467] fabbricate o vendute da Vigorelli.

Vigorelli non intraprenderà alcuna azione di contraffazione contro Singer in base a qualsiasi diritto derivante da brevetti già concessi o che verranno concessi in ogni paese, azione nei riguardi di elementi descritti e illustrati nei brevetti americani n.2.693.778 e nelle richieste per brevetto americane da parte di *Johnson* per il n.Serial 471.766 e da parte di *Perla* per il n.Serial 386684 e quando incorporati in macchine da cucire fabbricate e vendute da Singer, copie dei quali brevetti e richieste per brevetto sono a disposizione per ispezione da parte di Vigorelli presso gli Uffici dei Sigg.Barzanò e Zanardo in Milano.

relli S.p.A." (hereinafter called "Vigorelli"), a Corporation organized and existing under the laws of Italy, for them and their respective assignees.

Singer will not bring any infringement action against Vigorelli under the rights derived from patents now issued or to be issued in any country with respect to subject matter disclosed in Italian Patents No.497.557 and No.507.862 and when embodied in sewing machines manufactured and sold by Vigorelli.

Vigorelli will not bring any infringment action against Singer under the rights derived from patents now issued or to be issued in any country with respect to subject matter disclosed in U.S. patents No.2.693.778 and in the U.S. patent applications by *Johnson*, Serial No.471.766, and by *Perla*, Serial No. 386.684, and when embodied in sewing machines manufactured and sold by Singer, copies of which are at disposal for inspection by Vigorelli at the Office of Messrs. Bergano and Zenardo in Milan.

2) Entrambe le parti si accordano a non intraprendere alcuna azione di opposizione, [fol. 3468] nullità e invalidazione in contrasto ai sopracitati brevetti, o comunque agire contro gli stessi in ogninpaese, ed ad immediatamente sospendere tali azioni se già iniziate, e inoltre che, se tali brevetti o domande di brevetto delle due parti siano o diverranno inplicate in questioni d'ufficio di determinazione di priorità, quali casi di interferenza negli U.S.A. o in Canadà, ontrambe le parti agiranno insieme allo scopo di sistemare tali casi secondo le leggi e regolazioni degli uffici brevetti interessati e nello spirito del presente accordo.

Each of the two parties mutually agree not to institute any opposition, nullity or invalidation proceedings in any country against or otherwise to attack each others above noted patents or patent applications and immediately to withdraw any such proceedings if it has already been instituted provided, however, that if such two parties patents and patent applications are or have become involved in a patent office priority—determining proceedings such as a United States interference or a Canadian conflict proceeding, then both parties will work together in order to settle such a proceeding in accordance with the laws and regulations of the patent office concerned and in the spirit of this agreement.

3) Singer, como indicato in questo accordo, s'intende co- [fol. 3469] me The Singer Manufacturing Company, Singer Sewing Machine Company, le loro Società sussidiarie, affiliate ed associate, ed i loro clienti, in tutto il mondo.

Singer, as designated in this agreement, shall be understood as including The Singer Manufacturing Company, Singer Sewing Machine Company, their subsidiaries, affiliated, associated companies and customers throughout the world.

Vigorelli, come indicato in questo accordo, s'intenie come Arnaldo Vigorelli, S.p.A., le sue Società sussidiarie, affiliate ed associate tutto il mondo.

Vigorelli, as designated in this agreement, shall be understood as including Arnaldo Vigorelli, S.p.A., its subsidiaries, affiliated, associated companies and customers throughout the world.

In Fede Di Che le parti hanno reso esecutivo il presente accordo nel giorno e nello anno indicato sopra.	In Witness Whereof, the parties have executed this agreement as of the day and year written above.

Witness: ——.

Testimonio: ——.

The Singer Manufacturing Company, Max L. Waterman, Vice-President, Arnaldo Vigorelli, S.p.A.

[fol. 3470] In United States District Court

Government's Exhibit 12

Memorandum—CAW-M—April 14, 1958

Singer-Vigorelli United States Patent Interference

The basic United States patent application relating to the Johnson 401 machine is United States patent application Serial No. 471,766 filed November 29, 1954. The Johnson invention covered by this application was first conceived in this country in April 1953.

The Patent Office has unofficially advised us that this application is now in condition for allowance but its formal allowance is being held in abeyance pending the possible institution of an interference between one or more adversely-owned patent applications.

We assume that one of the possible interfering applications is owned by Vigorelli and, more particularly, corresponds to the Vigorelli Italian patent No. 507,862 filed in Italy on September 29, 1953.

Vigorelli Italian patent No. 507,862 constitutes a patent of addition relative to Italian Vigorelli patent No. 497,557 filed in Italy on January 28, 1953. We presume that Vigorelli filed in the United States one application having a dual priority with respect to these two Italian patents.

It is to be noted that Italian patent No. 497,557 discloses and claims the original Vigorelli multi-cam machine in

which the cam follower was capable of tracking only one cam at a time. The second Italian Vigorelli patent No. 507,862 discloses and claims the modified form of the Vigorelli machine in which the cam follower is capable of tracking to adjacently disposed cams during a predetermined stitching cycle. There is no doubt in our minds but that this latter structure is covered by claims now allowed in our above noted Johnson application. Attached to this memorandum are Johnson claims 98, 104 and 100 which we believe clearly cover the subject matter of the second Vigorelli Italian patent.

It is to be recalled that the Singer Vigorelli patent agreement of 1955 specifically relates to the Johnson United States application Serial No. 471,766 as well as to the Italian Vigorelli patents Nos. 497,557 and 507,862 discussed hereinabove.

This agreement contains the following clause:

> [fols. 3471-3473] "that if such two parties' patents and patent applications are or have become involved in a patent office priority-determining proceedings such as a United States interference or a Canadian conflict proceeding, then both parties will work together in order to settle such a proceeding in accordance with the laws and regulations of the patent office concerned and in the spirit of this agreement".

In view of the above we trust that if an interference is set up between Vigorelli and Singer that such an interference can be quickly settled between the two parties outside the United States Patent Office.

Although the Vigorelli patent No. 497,557 enjoys a priority date of January 28, 1953, earlier than the conception date of April 1953 of the Johnson 401 machine, it is pertinent to note that the Johnson conception date is earlier than the priority date of September 29, 1953 of the second Italian patent No. 507,862. In view of the situation it would appear that Johnson would win any United States interference involving subject matter common to his application Serial No. 471,766 and a United States corresponding to the second Italian patent No. 507,862.

It is our understanding that Dr. Lando has in his possession a copy of the United States Johson application Serial No. 471,766 as originally filed.

Enclosure—
Copy of claims.

[fol. 3474] In United States District Court

Government's Exhibit 13

December 28, 1955.

Leo Adamson, Esq.
Singer Nahmaschinen Akt.-Ges.,
Gutleutstrasse, 42,
16 Frankfurt a/Main 1,
Germany.

Dear Mr. Adamson:

Multiple-Cam Ornamental Stitch Sewing Machine

We thank you for your letters of November 15 and 17, as well as the copy of Dr. Wiegand's letter to you of November 14.

As you know, on November 17, 1955 Singer and Vigorelli executed an agreement relating to multiple-cam ornamental stitch sewing machines. Briefly stated, under the terms of this agreement Singer agreed not to bring any infringement action against Vigorelli in any country of the world with respect to Vigorelli-made zigzag stitch sewing machines of the type particularly disclosed in the Vigorelli Italian patents Nos. 497,557 and 507,862. For its part, Vigorelli agreed not to bring any infringement actions in any country of the world against Singer with respect to the Singer Class 282 and Class 319 machines as disclosed in the several Singer-owned patents and patent applications relating to these machines.

Although we know that Singer competitors other than Vigorelli may have certain patent applications which may [fol. 3475] possibly in the future interfere with the sale

of the Singer Class 282 and Class 319 machines, we believe that this Singer-Vigorelli agreement will go a long way toward assisting us in clearing our way through future patent obstacles. We appreciate, of course, that it may be necessary for us to attempt to make similar agreements with other Singer competitors.

We agree with Dr. Wiegand that various foreign patent offices including the German Patent Office undoubtedly have on file many patent applications relating to multiple-cam ornamental stitch sewing machines and that there is a possibility that one or more of these applications may mature into patents relating to subject matter similar to our Class 282 and Class 319 machines. However, as above indicated, we will face this possible situation and deal with it accordingly when it occurs. In the meantime, we will continue to watch very carefully the patents and patent applications as they are published in the various countries of the world. In this connection, your presumption is correct that it will not be necessary for Dr. Wiegand, at the present time, to prepare any further reports on this matter.

We shall, of course, keep you informed as to any further developments concerning this subject.

Yours very truly, The Singer Manufacturing Company, ——, ——, Patent Department.

CC: Mr. M. L. Waterman, Messrs. Cruikshank & Fairweather.

[fol. 3476] IN UNITED STATES DISTRICT COURT

GOVERNMENT'S EXHIBIT 14

December 23, 1955.

Dr. S. Lando,
Compagnia Singer per Macchine
da Cucire,
Palazzo Singer,
Via Dante 18,
Milan, Italy.

Dear Mr. Lando:

Singer—Vigorelli Agreement

Thank you for your letter of December 13 with enclosures. We are attaching the copy of Mr. Vigorelli's letter to our copy of the agreement.

Enclosed is a copy of a communication (in Portuguese) sent to the Brazilian Patent Office by our Brazilian attorneys. This communication withdraws our opposition to the Vigorelli Brazilian patent application Serial No. 71,416, and was filed at our request and in accordance with our agreement with Vigorelli.

You may wish to send a copy of this paper to Mr. Vigorelli's attorney to advise him that the opposition has been withdrawn. In discussing this matter when we were in Italy we understood that the Vigorelli organization, which is now operating in Brazil, has no connection with the Vigorelli of Italy and that the Brazilian company is not licensed under the Brazilian patent application Serial No. 71,416. If you should have an opportunity when you may be in conversation with either Mr. Vigorelli or his attorney, [fol. 3477] we would be pleased if you would by cautious remarks determine just what the relations between these two companies are, and whether or not our understanding that the Brazilian company is not licensed under the above noted patent is correct.

Yours very truly, The Singer Manufacturing Company, ——, ——, Patent Department.

Enclosures—
Copy of Mr. Vigorelli's letter
Copy of communication.

[fol. 3478] IN UNITED STATES DISTRICT COURT

GOVERNMENT'S EXHIBIT 15

Received Patent Department, December 22, 1955,
Answered—

Compagnia Singer Per Macchine Da Cucire
Societa Italiana Per Azioni
Sede Milano—Stabilimenti Monza
Capitale Sociale Lit. 1.800.000.000

Direzione Generale

Milano 10th December, 1955.

M. L. Waterman Esq.,
149 Broadway
New York, 6

Dear Mr. Waterman,

Dr. Lando paid a visit to Pavia last week, at Mr. Vigorelli's invitation, in order to collect some of the pictures taken during your visit. A selection, presented by Mr. Vigorelli, is being sent to you under separate cover.

During a friendly conversation with Mr. Vigorelli the following subjects were mentioned:

—Vigorelli has reached an agreement with Bernina on similar lines to the one made with us which commits both companies not to raise opposition to the patents concerning multi-cam zig-zag machines. In accordance with our agreement, Mr. Vigorelli made no mention to the Bernina people of his arrangement with the Singer Company.

—Dr. Lando was asked whether the speed regulator (?) used by Necchi on the Supernova machine was not in conflict with Singer patent No. 458.583 since he might also be interested to adopt the same mechanism on his machine. Dr. Lando replied that the matter would be submitted to our technical people.

—It appears that Ing. Martinoli has been removed from his position as General Manager of the Necchi Company—apparently because of his left wing tendencies—and has been appointed as head of a new Company "S.I.R.I."

created by Necchi for the purpose of "spreading the Necchi name throughout the world." Ing. Martinoli has left for India to start his new activity there.

Stanford investigating. Apparently not relevant. W Stanford advised.

Yours very truly, Compagnia Singer, per Macchine da Cucire.

[fol. 3479] In United States District Court

Government's Exhibit 16

January 19, 1956.

M. L. Waterman, Esq., Vice-President,
The Singer Manufacturing Company,
Singer Building, New York.

Dear Mr. Waterman:

Singer Class 319 and Class 282 Multiple-Cam Ornamental Stitch Sewing Machines.

You will recall that during our recent trip abroad we discussed the "Bernina Favorit Model 540" machine. At that time we had knowledge of the facts that Bernina had filed on May 31, 1952 a Swiss patent application, on May 3, 1953 a German utility model application, and on May 31, 1953 an Italian patent application all directed to the above noted type of multiplecam ornamental stitch mechanism. Rumor had it that Bernina also filed corresponding German and United States patent applications covering this same mechanism. At that time only the German utility model (No. 1,707,338) and the Italian patent (No. 501,172) had been issued. In view of the discussions in Italy and Germany, it was decided that Bernina's German utility model and Italian patent did not validly block Singer from manufacturing and selling the Class 319 machines in Germany and Italy. However, the Swiss Bernina patent application and possibly the corresponding German patent application may mature into patents containing claims which would

[fol. 3480] be infringed respectively in Switzerland and Germany by our Class 319 and Class 282 machines.

Several weeks ago the U. S. Patent Office unofficially advised us that the claims of our U.S. Harris reissue patent application are allowable over the known issued patents. These claims, if allowed, would read on both the Singer and Bernina machines. It follows that such claims if contained in a Bernina U. S. patent application would also be allowable over the known issued patents.

We have been continually investigating the records of the U. S. Patent Office to locate any evidence that would indicate that Bernina has filed a patent application corresponding to its original Swiss application of May 31, 1952, and until last week had found nothing to indicate that such an application had been filed. We now find that a Bernina patent assignment was recently recorded in the U. S. Patent Office and, as this assignment referred to an application executed on May 20, 1953, it could relate to a patent application corresponding to the above noted Bernina Swiss patent application. Unfortunately for us, the parent Swiss Bernina application was filed in Switzerland some nine days prior to the effective filing date in the United States of our Harris reissue application No. 516,058. From this, it is reasonable to presume that if this [fol. 3481] U. S. Bernina application in fact corresponds to the parent Swiss case, the U. S. Patent Office will declare an interference between this application and our recently filed U.S. Harris reissue application No. 516,058 for the purpose of determining which of the two parties is entitled to the broad claim. Since any such U. S. Bernina application would be entitled to its corresponding Swiss priority date of May 31, 1952, which is nine days prior to the effective U. S. filing date of June 9, 1952 of the Harris reissue patent application, it would appear that Bernina might be entitled to the broad claims.

However, a U. S. patent interference proceeding is a long and complicated affair during which each party has an opportunity to attempt to block the ultimate allowance of the interfering claims to the opponent party. The outcome of such an interference cannot be predicted with certainty. In other words, assuming that Bernina has filed such an application in the United States, then our Harris

reissue application is of value to us as a means for opposing the final allowance to Bernina of broad U.S. claims covering multiple-cam ornamental machines.

If Bernina has filed such an application, we would presume that the U. S. Patent Office would set up an interference with our Harris reissue application within the next four to eight weeks since, as above stated, the Patent Office [fol. 3482] has already unofficially advised us that the claims in our Harris application are allowable over any known issued patents. In view of this situation, we would strongly recommend that this Company attempt to work out with Bernina an agreement along the lines of the Vigorelli-Singer agreement. Our chances of negotiating such an agreement with Bernina would be greatly enhanced if we could approach them before any patent interference is declared. At the present time, we feel that we have more knowledge concerning this entire situation than does Bernina. Thus, up until the time that such an interference is declared Singer would be in the better bargaining position with Bernina, for after declaration of the interference Bernina would, as a matter of course, be given access by the Patent Office to our Harris reissue patent application and then would know that its application has an effective filing date nine days earlier than our Harris application.

We also have information to the effect that several other parties may be placed in interference with the Harris patent application. We have no exact knowledge as to who these parties may be. However, we are not as concerned over the other parties, as it is possible that Harris [fol. 3483] is senior to these parties. As for Bernina, we know that Bernina is the senior party by nine days.

You will note in your copy of Mr. Adamson's letter of January 11 in reference to the multiple-cam ornamental stitch machine that Dr. Wiegand repeats his statement that the "legal situation is extraordinarily complicated" and that as a result of the discussions he had in the German Patent Office at Munich "it will probably be more complicated still than can be judged at the moment". We are fully aware of the "extraordinarily complicated" situation in Germany, and for that matter, most of the important manufacturing countries in the world.

Summary

The present patent situation relative to multiple-cam machines is complicated due to that fact that shortly after World War II many sewing machine concerns developed various forms of this type of machine and then filed at substantially the same time patent applications directed to cover their various developments. Some of these applications were filed as early as 1952. In many of the principal manufacturing countries there will be patent conflicts to determine which parties are entitled to the broadest patent protection. In our opinion, no one party can or will corner the broadest patent protection in all or even in [fol. 3484] several of the principal countries.

Should a Singer competitor acquire in any of the principal countries, with the possible exception of Japan and Switzerland, patents reading upon our Class 319 and Class 282 machines, we are reasonably certain that we can acquire favorable licenses under such patents.

However, we hope to avoid the necessity of asking for such licenses and paying tribute under such patents by negotiating agreements with any such potential patent owners before the world-wide patent picture clears relative to multiple-cam machines. This we have already done with Vigorelli, and we suggest that the same approach be used with Bernina and any other party which appears as a potential owner of a dominating patent.

We believe that our position would be enhanced if we could negotiate an agreement of the Singer-Vigorelli type with Bernina. Presumably, the earlier we approach Bernina concerning this matter the greater would be our chances of success.

Yours very truly, The Singer Manufacturing Company, J. G. Stanford, Patent Department.

In triplicate.

CC: Mr. D. P. Kircher.

[fol. 3485] IN UNITED STATES DISTRICT COURT

GOVERNMENT'S EXHIBIT 17

Received Patent Department, February 7, 1956,
Answered—

The Singer Manufacturing Co.
Singer Building
149 Broadway
New York 6, N. Y.

Division of Research

In Replying Please Refer to 31-028 MLW:V3

February 6, 1956.

Personal & Confidential

C. F. Baumann, Esq.,
Milan, Italy.

Dear Mr. Baumann:

Your letter of December 10th tells of a visit that Dr. Lando made to Pavia at the invitation of Mr. Vigorelli, on which occasion some of the photographs taken during our visit in November were handed to Dr. Lando.

It seems that inquiry was made of Dr. Lando with respect to a possible patent conflict between Singer and Necchi. The question related specifically to the type of speed regulator (so-termed) that is used in the Necchi "Supernova" machine and as to whether or not this means of speed regulation conflicted with Singer Patent No. 458583. Our Patent Department has looked into this matter and concluded that this Singer Italian patent is directed to an entirely different mechanism and system from that used in the Necchi "Supernova" machine. Our patent is concerned with a stop-motion system and uses an induction motor with special windings. The low speed of our system is not a working speed but merely an intermediate speed used preparatory to stopping. Our patent relates to a

group-stitch sewing machine system and utilizes machine-operated cams for controlling the sequence of events in the fixed operating cycle. The Necchi mechanism and system is entirely different and does not infringe the Singer patent.

It seems that during Dr. Lando's conversation with Mr. Vigorelli mention was made of the agreement Vigorelli has concluded with Bernina. This is stated to be along the same lines as that concluded between ourselves and Vigorelli last November. We are very much interested to learn of the Bernina-Vigorelli agreement, as confidentially there is the possibility that we will want to meet at some time in the near future with Bernina representatives and discuss similar arrangements. I think, if Dr. Lando could use the excuse of passing on to Mr. Vigorelli the foregoing information concerning the Singer patent, about which he has inquired, as a reason to again visit Pavia and have an informal talk with him, at which time the information I have just given concerning the patent could be passed on to him, there would be a good opportunity to very informally chat about the Bernina agreement. We would [fol. 3486] very much like to know, of course, any further particulars that Mr. Vigorelli might pass out on such an occasion about the agreement with Bernina. We would like to know just how it came about that, after Bernina having pressed as they did for the sum of $160,000 (this figure was mentioned during the course of our visit last November), the ultimate settlement was for no monetary consideration but only on the basis of neither party interfering with the other with respect probably to certain specific patents. We would like to know details of the particular patents that Vigorelli had come across which caused Bernina to drop its demands for the large amount for settlement; the numbers, if possible; and, of course, the inventor and the country in which the patent or patents were taken out. We have surmised at times that perhaps Vigorelli learned of the particular patent which was used as his defense through the oppositions which we entered against Vigorelli and other patents in Brazil, or which we disclosed during the course of our talks with Mr. Vigorelli's patent attorneys.

We would further like to know the name or names of

the officials of the Bernina Company with whom Mr. Vigorelli may have had conversations and, if they were not carried on with principals of the Bernina Company but rather with the patent attorneys of that company, then we would like to know the names of the patent attorneys; and we would like also to know the location of the office of the principals with whom Mr. Vigorelli had his conversations.

I know that in the foregoing I am asking for a considerable amount of information, and it may not be that the kind of a meeting which will be arranged will be one during which all of this can be ascertained, but there is every likelihood that we will be meeting with Bernina before long, and every bit of information which we can have that indicates the reason for Bernina dropping its severe attitude toward Vigorelli will be most helpful.

Plans for my travel to Europe are becoming more fixed, and I am hoping to arrive at Genoa on April 9th on the "Andrea Doria". With me will be Mrs. Waterman and Messrs. Stanford and Graesser. In view of the fact that the Milan Fair does not open until the 12th of April and because of our anxiety to meet with Bernina as soon as possible, provided we continue with our thinking that it is well to bring such a meeting about, we would propose to proceed at once from Genoa to Switzerland and also, of course, provided any meeting with Bernina would necessarily be held somewhere in Switzerland. We are tentatively planning that we would be in Switzerland at least a week, and then we would come back to Milan to visit at the Fair and with you and your organization. Such an arrangement might bring us to Milan around the 17th or 18th of April, and I would suggest that you arrange hotel [fol. 3487] accommodations beginning with the 17th until the 22nd, which is Sunday, on which day we would be leaving on the night train for Paris. If it is necessary to secure accommodations on the train this far ahead, then I would ask that you do so for the four of us. I do not know what the travel arrangements are from Genoa to probably Zurich but, if it is necessary to secure such accommodation ahead, then I would ask that you do this, having ascertained at what time the "Andrea Doria" will probably be dock-

ing and allowing sufficient time so that we could reach the train on th. day of arrival.

A great deal of our travel-plans will depend upon any information that you and Dr. Lando may be able to learn from Mr. Vigorelli about his company's agreement with the Bernina Company.

It occurs to me that, just as an item of conversation during your and/or Dr. Lando's visit with Mr. Vigorelli, you could mention that, when writing you, I had referred to a statement that Mr. Vigorelli made to the effect that he would probably be coming over to the United States early this year and that at that time he had said he would probably be paying me a visit. In this connection, I think you could say to him that you had learned that he was contemplating this trip but that you had learned that I was intending to come to Italy some time during the spring, probably about the time of the Milan Fair, and that I had asked you to pass this word on to him so that he would know that I would not be here in the States for a period of a few weeks about that time.

Very sincerely yours, M. L. Waterman, Vice President.

Letter in duplicate.

cc: Mr. J. G. Stanford.

[fol. 3488] IN UNITED STATES DISTRICT COURT

GOVERNMENT'S EXHIBIT 18

Personal

February 21, 1956.

Dear Mr. Baumann:

Thank you for your letter of February 11th, in which you advise concerning the possibilities of travel between Genoa and Zurich upon our arrival in Genoa.

The whole idea of going directly to Switzerland is predicated upon two factors. First, that we will have ar-

rived in our minds at a logical and plausible reason, and sufficiently interesting too from the standpoint of the Bernina people, to visit them, and second, that we have been able to establish our contacts with the proper persons and to arrange for a meeting at the desired time.

We can only make a decision upon the first premise when we hear from you and learn the results of your conversations with Mr. Vigorelli and perhaps, have answers to some or all of the questions that we posed in our letter to you previously.

It seems to me that it would be better to spend the night following arrival of the "Andrea Doria" at Genoa and to proceed the next morning, as you have suggested, by early train to Zurich. I suggest, therefore, that, if necessary to do so in advance, accommodations be made for the hotel and our travel. Perhaps, however, you may conclude that it is not necessary for you to make these arrangements immediately, but I shall leave this matter to your good judgment.

Very sincerely yours, ——, ——.

C. F. Baumann, Esq., Compagnia Singer per Macchine da Cucire, Palazzo Singer, Via Dante 18, Milan, Italy.

[fol. 3489] IN UNITED STATES DISTRICT COURT

GOVERNMENT'S EXHIBIT 19

Received Patent Department, March 6, 1956, Answered —.

Compagnia Singer Per Macchine Da Cucire
Societa Italiana Per Azioni
Sede Milano—Stabilimenti Monza
Capitale Sociale Lit. 1,800,000,000

Milano, 3rd March, 1956.

Personal

M. L. Waterman Esq.,
149 Broadway
New York, 6

Dear Mr. Waterman,

With reference to your letter of February 6th and further to mine of Febr. 24th, I am pleased to tell you that the meeting between Dr. Lando and Mr. Vigorelli took place at Pavia on February 29th. Dr. Lando was most successful in this delicate mission and has secured, I believe, all the information that you ask for . . . . and perhaps something extra as well. Therefore I cannot do better than attach a translation of his report.

If, as I understand is the case, the Bernina claim to 100 million lire from Vigorelli was based on 20 Swiss Francs (3,000 lire) per machine, this would give us a clue to the quantity of machines that Vigorelli had manufactured up to the time of the agreement. The resulting figure—33,000 in two years—would tie-in with what we already know about Vigorelli's production.

You may now be in a better position to decide about your contemplated visit to Switzerland and to let me know what your definite plans will be. In the event of your adhering to your original intention of proceeding from

Genoa to Zurich, Dr. Lando and I will meet you in Genoa on April 9th.

Trusting that the enclosed will prove helpful,

Yours sincerely, ——, ——.

Enclosed in duplicate—Mr. Vigorelli's negotiations were conducted with the four people named in the report.

[fol. 3490] Translation

Received Patent Department, March 6, 1956, Answered—

Dr. Lando's Report on His Visit to Vigorelli, Pavia, on February 29, 1956

With reference to the contents of Mr. M. L. Waterman's letter of Febr. 6, 1956, I had a meeting with Mr. Vigorelli in Pavia on February 29th and I am setting out below a summary of the information obtained during the course of a long and friendly conversation. Details of the addresses were obtained later from the Swiss Chamber of Commerce and those relating to the patents from Messrs. Cicogna.

After having underlined to Mr. Vigorelli the advantages of the agreement with Singer as revealed in the Harris case (fully recognized by Vigorelli) I proceeded to ask him what were the reasons which caused the change in the Bernina's attitude which, from an original demand for 100 million lire (or 20 Swiss Francs per machine) consented to an agreement which did not contemplate payments of any kind.

According to Vigorelli this change was due to a variety of reasons each of which had its importance and which can thus be summarized:

1) Weakness of the Italian Gegauf-Bernina patent, the contents of which were too generic, and in which the device —common to the Vigorelli machine—which came to be fundamental (multiple cams cooperating with single cam-follower) is described in the patent among the minor details, in fact as one of the possible variations.

2) Weakness of Gegauf-Bernina position vis-a-vis Vigorelli as regards the number of countries in which the respective patents were deposited (4 for Gegauf-Bernina

namely Germany, Switzerland, Italy and U.S., against 17 for Vigorelli).

In fact the "embargo" which Vigorelli would have been able to place on Bernina products in those countries where the latter had not deposited its patents considerably reduced any advantage which Bernina would have been able to obtain in the 4 countries where the patents had been deposited.

3) The exhibition by Vigorelli of patents, of whose existence Gegauf-Bernina thought that Vigorelli was unaware, patents which apart from excluding that the general claim (multiple cams) could be sustained, also left open to discussion the specific claim (single cam-follower) contained in the two patents under discussion.

[fol. 3491] 4) The declaration on the part of Vigorelli of the existence of other patents of the same kind as those mentioned above.

Attached is a complete list of these patents divided into two groups A and B: group A includes those discussed between Vigorelli and Gegauf-Bernina, and group B those forming part of the "reserve" which remain outside the discussion.

The agreement between Vigorelli and Gegauf-Bernina was concluded at Zurich on December 16th, 1955. It consists of an exchange of letters between the two parties in which they undertake "not to raise any opposition" in respect of the manufacture and sale in all countries of the respective zig-zag machines, in accordance with Vigorelli patents Nos. 497.557 and 507.862 (Italian), and Gegauf-Bernina patent No. 310.788 and patent application N. G. 91.361 (Swiss).

Both parties further undertake not to cede to third parties manufacturing rights based on the above quoted patents, with the exception for Gegauf Bernina of the Spanish firm A. Fraire, and for Vigorelli of Francolite Vigorelli do Brazil.

Vigorelli has shown me that as far as he is concerned this clause is destined to remain without practical application since he has no intention of ceding this right to Francolite Vigorelli do Brazil.

The address of Messrs Fritz Gegauf is the following:

Fritz Gegauf, Societé Anonyme
Fabrique de Machines a Coudre Bernina
Steckborn—Telephone (054) 82482, Telegrammes Bernina

Outright owners of the business are Messrs Fritz Gegauf Senior & Junior. The father is a man of about 60, very energetic, suspicious, argumentative and with a difficult character; the son is around 30, more adaptable but with less say in things.

For patent matters Gegauf-Bernina rely on Messrs Blum & Co., Patentanwalte Bureau, Bahnhofstrasse 31, Zurich, Telephone No. 251.633; the head of which is Mr. Eugen Blum who speaks French, German and English fluently. The principal expert, however, is Engineer A. Willi who speaks German, French and Italian fluently. [fol. 3492] The series of questions put to Vigorelli in the course of the conversation during which other subjects were touched upon, such as the likelyhood of a trip of Vigorelli to New York during the absence of Mr. M. L. Waterman (postponed sine die because of his uncertain health), the Harris "interference" and Necchi's speed regulator, could not fail—even if put in the most casual way—to raise Vigorelli's curiosity as to the motive behind them.

I repeated what I had already mentioned at the start of the conversation namely that we were interested in discovering how Vigorelli had managed to reach an agreement with Bernina without the compensation originally requested.

Mr. Vigorelli's reply was interesting "I was under the impression that Singer was collecting information for opposing the Gegauf-Bernina patent in U.S. and prevent the sale of their machine there". On my expressing some doubt as to the correctness of his interpretation Mr. Vigorelli was unable to hide some disappointment.

Dr. S. Lando

Milan Management, 2nd March, 1956.

[fol. 3493] Reference Cited During the Prosecution on the Application for Vigorelli Patent

List A

Exam. in	Patent	Inventor	Number	Remarks
U.S.A.	U.S.	Sigoda	2.365.222	67
U.S.A.	U.S.	Van Tuyl	2.590.907	47
U.S.A.	U.S.	Karlsson	2.600.543	309
U.S.A.	U.S.	Magowan	19.184	309 (1908)
U.S.A.	U.S.	Bitzer	2.005.070	1
U.S.A.	U.S.	Miller	1.033.721	36
U.S.A.	U.S.	Harris	2.693.778	—
U.S.A.	French	Denis	784.689	1 (May 6, 1935)
Canada	Canadian	Segoda	465.162	72
Austria	German	Mefina	825.333	309
Germany	German	Durkopp	178.086	67
England	English	Magowan	19.184/08	—

[fol. 3494] Reference Cited During the Prosecution on the Application for Vigorelli Patent

List B

Exam. in	Patent	Inventor	Number	Remarks
Canada	Canadian	Parkes	73.837	71 U.S. 652.326
Canada	Canadian	Parkes	75.859	67
Canada	Canadian	Francis	194.095	67
Japan	Japanese		138/1955	(Publication Dom. 11.318/1951)
				309
Germany	U.S.	Dunbar	88.282	(1869)
Germany	German	Parkes	219.187	
Germany	German	Casas-Robert	871.105	
England	English	Jackson	476.079	9
Sweden	German	Durkopp	517.822	311
	German	Beckmanns-hagen	802.364	309

[fol. 3495] IN UNITED STATES DISTRICT COURT

GOVERNMENT'S EXHIBIT 20

Received Patent Department, March 21, 1956, Answered—

March 14, 1956.

Confidential

E. Winteler, Esq.,
Geneva, Switzerland.

Dear Mr. Winteler:

Thank you for your letter of March 6th in reply to mine of March 1st, in which I told of our intention to visit you in April and of the possibility that we would want to talk with the responsible management of the Bernina Company, Messrs. Fritz Gegauf. As time is becoming short before we shall be departing, we have been giving study to this subject and have concluded that we definitely wish to meet with these people. The subject which we want to discuss with them concerns measures that we and Messrs. Gegauf together might take to avoid conflicts between patent applications owned by Singer and by Gegauf relative to zigzag machines which have incorporated in them multiple cams for doing at will any one of a number of embroidery effects, as may be produced by any one of these cams.

However, before we talk with Messrs. Gegauf's representatives, we shall be seeing our own Singer patent representatives in Switzerland about the subject we shall be discussing with Messrs. Gegauf. Mr. Stanford has written to Mr. Fairweather advising him to this effect, and I have no doubt that Mr. Fairweather has by this time written to these Swiss representatives telling them of our visit. I think, however, it would be well that you ascertain from our patent representatives in Switzerland, with whom you are doubtless taking up many miscellaneous matters from time to time, whether they have been notified by Mr. Fairweather of our approaching visit. I am not sure whether the office of these people is in Geneva or in Zurich, but I am inclined to believe it is in Geneva. I have no doubt, however, that they will be willing to meet with us at Zurich, where we will

be staying, and which is closer to the Gegauf headquarters, which I believe are at Steckborn.

Since we are arriving in Zurich on the 10th, and there may be a number of days required for the discussions with our patent attorneys and with the people from Gegauf, we would like that representatives of our patent office be prepared to meet with us in Zurich beginning the morning of Wednesday, April 11th, and for as long as may be required [fol. 3496] for the preliminary discussions with them, which we thing should be completed on that day, and then throughout the discussions that we may have with the Gegauf people, the duration of which we cannot, of course, venture any opinion on. We would hope that our patent lawyer, or lawyers, who would attend this meeting would speak English or that they would have with them some person conversant with patent language who could act as translator, since neither Mr. Stanford nor I understand French or German technical language fluently.

If the foregoing arrangement with our patent attorneys can be arranged, we would anticipate that we would be in a position to talk with the representatives of Messrs. Gegauf on the following day, Thursday, April 12. We would appreciate it, therefore, if, after the arrangements with our patent attorneys have been firmly established, you would then visit the management of Messrs. Gegauf and arrange for Mr. Stanford and me to meet these persons. Whether this meeting would best be held at Steckborn or whether the Gegauf representatives would come to Zurich we leave to your judgment and arrangement. We believe that, when we talk with the persons of Messrs. Gegauf, our Singer patent attorneys should be present. We think that the subject we wish to discuss with Messrs. Gegauf will be one of interest to them and that they will wish to have present representatives of the patent firm that represents them. Perhaps the attorneys for both sides will not be present in the preliminary talks that may precede the actual discussion of the subject we wish to talk with them about but, certainly, the patent attorneys of both parties will wish to be present shortly after the initial meeting and as the talks progress.

We do not know where the attorneys of Messrs. Gegauf may have their office but, if it is in Zurich, it is quite likely that all of the discussions can best take place in that city.

Again, we do wish to leave to you the concluding of the agreement with Gegauf as to where our meeting shall take place. If this is to be at Steckborn, which is some little distance from Zurich, we would leave it to you as to what hotel arrangements should be made.

We have learned from other sources that the executive heads of the Gegauf Company are Messrs. Fritz Gegauf Senior and Junior, and I rather presume that these will be the gentlemen we will want to talk to and that will want to talk with us. We also have some information that indicates the patent attorneys of Messrs. Gegauf to be Messrs. Blum & Company, Patentanwalte Bureau, Bahnhofstrasse 31, Zurich, and that the head of this concern is a Mr. Eugen Blum, who speaks English fluently. There is also with the patent firm an engineer, A. Willi, who has knowledge of several languages but does not appear to speak English.

We are planning to leave the United States on the [fols. 3497-3498] "Andrea Doria" on Saturday, March 31st, and will disembark at Genoa, April 9th. It is quite necessary, therefore, that we know at the earliest possible moment of the results of your endeavors to set up the meeting with our own patent attorneys and with Gegauf. We hope that we shall receive a reply from you advising of the results of your endeavors to meet with all of these persons soon, so that, if there are any further details that we may need to take up with you before our departure, we will be able to do so either by letter or by cable. Any information that you have on this subject and which may come to you after our departure from New York and while we are en route about which you would wish to have some advice from us can be cabled by wireless to the ship.

Very truly yours, ——, ——, Vice President.

[fol. 3499] IN UNITED STATES DISTRICT COURT

GOVERNMENT'S EXHIBIT 22

Received Patent Department, March 27, 1956, Answered—.

Compagnie des Machines a Coudre Singer S.A.
Siège Social

Zurich, March 23, 1956.

Your Ref.: 30-019 MLW:V3

Confidential

M. L. Waterman, Esq.
Vice-President
The Singer Manufacturing Co.
149, Broadway
New York 6, N. Y.

Dear Mr. Waterman,

I wish to thank you for your letter of March 14, from which I conclude that you have definitely decided to meet the responsible managers of the Bernina Company, Messrs. Gegauf, whose headquarters are at Steckborn.

I had meanwhile contacted Mr. Fairweather, in Glasgow, and received the following cable from him:

> "our preferred associates in switzerland are deriaz kirker and co of rue du mont blanc 14 geneva stop if mr stanford is to be in zurich only he could consult patentanwalts bureau fritz isler of pelikanplatz 15 zurich who have filed numerous singer patent applications in switzerland and who are quite competent attorneys patents".

Mr. Fairweather has notified Messrs. Deriaz, Kirker & Co., Geneva, of your approaching visit and moreover, in his above wire, he recommends Mr. Fritz Isler of Zurich as a competent patent attorney.

Since I am in Zurich at present, I have taken further steps and seen Mr. Isler. This gentleman speaks German,

French and English fluently, including the technical language, and, as a further advantage, resides in Zurich. [fol. 3500] With Mr. Isler being present at our discussions, a second interpreter would become unnecessary.

Thus, both Mr. Kirker of Deriaz, Kirker & Co. and Mr. Isler would be at our service.

Furthermore, I cabled you yesterday as follows:

> "have contacted management bernina messrs. gegauf arranged meeting thursday april 12 in steckborn letter follows"

and confirm that I have got in touch with Messrs. Gegauf of the Bernina Company at Steckborn and arranged for you and Mr. Stanford to see these gentlemen on Thursday, April 12, in the morning. Messrs. Gegauf prefer to meet you at Steckborn and thus to have the opportunity of showing you their factory on this occasion. Steckborn is at only one hour from Zurich, and it is therefore not necessary to make any changements regarding the hotel accommodations.

As I am personally not familiar with any details about the matter, I have told Messrs. Gegauf that the subject to be discussed will be "patent questions".

I am pleased to say that all necessary arrangements regarding your visit have been made in accordance with your instructions and you can be assured that you will find everything in best order.

Wishing you a pleasant journey and looking forward to seeing you in Zurich, I am, dear Mr. Waterman,

Yours very truly, ——, ——.

[fol. 3501] IN UNITED STATES DISTRICT COURT

GOVERNMENT'S EXHIBIT 23

Duplicata
Dériaz, Kirker & Cie

Bureau D'Ingénieurs-Conseils En Propriété Industrielle
Fundé en 1877 par

E. Imer-Schneider

Brevèts D'Invention
Marques de Fabrique
Modèles Industriels
Messrs. Cruikshank & Fairweather,
29 St. Vincent Place,
Glasgow, C.1.

Genève
Rue du Mont-Blanc 14

Date 17th April, 1956.

Dear Sirs,

Re: The Singer Manufacturing Company.

Referring to your letters of the 16th and 23rd ult., we would inform you that the writer went to Zurich on the 11th inst. and stayed there until the 21st with Mr. Waterman, Vice-President of The Singer Manufacturing Company, and Mr. Stanford.

We had two meetings with the manufacturers of the Bernina sewing machines (Gegauf Aktiengesellschaft, Bernina-Nähmaschinenfabrik) and prepared, after several interviews and discussions with your client's representatives, an agreement which was signed by both parties on the 14th inst.

We believe that this agreement corresponds exactly to the wishes of both parties and that the latter were well satisfied.

The question of our bill was not raised and we would ask you if, under the circumstances, we have to send it to you.

We are taking this opportunity for sending you by the same mail two copies of an English translation of the new Swiss Patent Law, of which we spoke with Mr. Waterman.

One is for your office and we would ask you to kindly send the other to Mr. Waterman, to whom we promised it.

Yours faithfully, Deriaz, Kirker & Cie.

enclosures (sep.)

2 transl of the Law.

Received Patent Department, April 24, 1956, Answered—.

[fol. 3502] IN UNITED STATES DISTRICT COURT

GOVERNMENT'S EXHIBIT 24

The Singer Manufacturing Co.
Singer Building
149 Broadway
New York 6, N. Y.

Division of Research

In replying please refer to 31-026 MLW: V3-9

Dictated at Zurich, April 13, 1956.

Memorandum to: Mr. M. C. Lightner

I have cabled to you briefly concerning the results of the conference at Steckborn with Mr. Gegauf of Bernina. We arrived there about 9:00 in the morning (it is only an hour's drive from Zurich) and, for a period of an hour, talked about many things that had no bearing on the subject we were to talk with them about. Mr. Gegauf brought out at once that they were working on a very short material situation. Their die castings were only one to two days ahead of the factory and, hence, the factory people, or some of them, have to go home every day in the middle of the day or later in the afternoon. So, he wanted us to go out through the factory, as soon as we cared to do so, in the morning rather than in the afternoon.

Before going out, we talked over various subjects. He mentioned Turissa and how Migros is quite dissatisfied with their ownership and arrangement for the sale of

Turissa machines. It seems that the Turissa costs are so high that at the price at which Migros wishes to sell them there is no profit. I judge that the situation is a very unhealthy one. We then talked about Helvetia, and it looks as though they are just about at the end of their rope. They have no more money, and the affair with Australia did not go well. Their machines are not liked there, and the story is that they will not receive any more orders for this market.

Gegauf's big fear is that the Japanese machines coming into the United States will be sold at a lower price than his machines will be because of their low-price labor. I think his fears are well-founded, and we did not do anything to cause them to be other than along the line that he was thinking, because one of the strong points of our argument for the agreement between our two companies is in order to fight against this Japanese competition in their building a machine that in any way reads on the patents of ourselves and of Bernina which are in conflict.

I sensed that there is no good feeling between Tavarro, the makers of Elna, and the Gegaufs. Mr. Gegauf states that the sale of Elna machines is on the downward path in Switzerland and that his sales last year were 17,000 in Switzerland versus Elna's 9,000.

[fol. 3503] After sparring about for an hour on various subjects without having touched on the matter of patents, we went out for a visit through the factory. I was exceedingly well-impressed with it—its cleanliness, its machinery, its type of people, and I was well-impressed with the machines that they are building. There is no doubt, too, but that the Gegaufs are well-impressed with their own machine and their own situation. Their only problem is to get more material and to build more machines. They are going to enlarge, but it is evident that the Gegaufs are somewhat conservative, and they do not intend to in any way go to extremes.

One of the difficulties of our conversation of yesterday was that there were too many people present. There was Stanford and myself and two patent attorneys for us, and there were the two Gegaufs, father and son, and a patent attorney for them and three others of the top management of the Bernina Company. During the course of our talk,

a great many things were thrown out by one of these latter three. They all had no bearing upon the patent situation, but this person evidently thought he could do some bargaining. One thought expressed was that Singer should sell Bernina full-size cylinder zigzag machines in Singer shops, not only in Switzerland but also elsewhere. Another thought was that Bernina shops should tell customers who might want a flat-bed machine to go to Singer and that Singer shops should tell customers wanting full-size cylinder zigzag machines to go to Bernina shops. Both of these ideas were disposed of in rather easy manner, although some talk was required. It was even suggested that there should be a division of territories as between Bernina and Singer, and this was brushed aside pronto in short order, and I am sure they understood the reason why. Throughout the discussions, it was very evident that they were extremely afraid that Singer wanted to build a machine exactly like their present style machine, which, there is no doubt, they feel is just about the best multi-cam automatic zigzag machine of all those on the European market; and they would like to have that kind of a statement in any kind of an agreement that we might draw up with them. Of course, the difficulty in putting any such statement or anything of that kind in an agreement is that it is hard to set-forth just what features of their machine we would not want to put in any machine at some date in the future. Who knows what we will want to do two or three years from now. I am sure that there could be no words that would set-down without being subject to a great deal of questioning just what they might mean at a later date.

This morning, Friday, Mr. Stanford and our patent lawyer are trying to word-up a draft which will have nothing in it with respect to any machines that Bernina is now making or that Singer is now making or that either one of them intends to make in the future, but which will have in it only reference to the patent subject matter under discussion. We certainly left with them not doubt but that we were going to offer objection to the issuance of their patent not only in the United States but in every other country of the four in which they are seeking patent or have patent protection, and we let them know that we thought we could knock out their claims but that in so

doing we were probably going to hurt both of us. I think that at the end of our long meeting they felt a little bit different about their situation than they did when we started because they went into a huddle and actually drew up a paper which they were willing to sign and I won't say wanted us to sign but which we could sign, and perhaps [fol. 3504] you might say it was a paper acknowledging the intent to sign an agreement, but this paper had in it too much about not building a machine of their type and their not building a machine of our type and so forth. So, we broke up in good spirits and with the intention of meeting here in Zurich tomorrow afternoon. By that time, we shall have a draft of a paper prepared which we think will relate only to patents under discussion and which will be a more simple one with less words and one about which at some time later be less question.

M. L. Waterman.

[fol. 3505] In United States District Court

Government's Exhibit 25

Translation

On the basis of the to-day's discussion between Mr. Waterman, Vice-President of the Singer Co., New York, accompanied by the patent attorney of the Singer Co., Mr. Stanford, as well as Mr. Kirker of the patent attorneys' office Dériaz, Kirker & Co., Geneva, and Mr. Winteler, Manager of the Swiss Singer Co., on the one hand, and Messrs. Fritz Gegauf sen., Fritz Gegauf jun., H. Bernhard and F. Meyer of the Company Fritz Gegauf Aktiengesellschaft, Steckborn, and Mr. Willi of the patent attorneys' office E. Blum & Co., Zurich, on the other hand, the following agreement has taken place with to-day's date:

Both parties have the will to conclude a contract (agreement) on the following points, in view to respect reciprocal interests and to safeguard their common interests against third parties.

1) Singer Co. undertakes neither to manufacture nor to allow to manufacture, and neither to sell nor to allow to

sell sewing machines of a kind to be defined more precisely, of the Company Gegauf AG.

Conversely, the Company Fritz Gegauf AG. undertakes neither to manufacture nor to allow to manufacture, and neither to sell nor to allow to sell sewing machines of a kind to be defined more precisely, of the Singer Co.

The said reciprocal provisions are valid for all countries.

2) Singer Co. undertakes neither to attack nor to allow to attack the patents and patent applications of Fritz Gegauf AG. to be defined more precisely, respectively not to support in any way attacks (against such patents and patent applications). Moreover, Singer Co. undertakes to respect said patents and, in case of need, to give assistance to Fritz Gegauf AG. in the defense of the said patents.

Fritz Gegauf AG. undertakes neither to attack nor to allow to attack the patents and patent applications of Singer Co. to be defined more precisely, respectively not to support in any way attacks (against such patents and patent applications). Moreover, Fritz Gegauf AG. undertakes to respect said patents and, in case of need, to give [fol. 3506] assistance to Singer Co. in the defense of the said patents, as far as such an assistance lies in the field of interests of Fritz Gegauf AG.

[fols. 3507-3508] 3) Fritz Gegauf AG. undertakes not to attack in any way the said construction of the kind still to be defined more precisely of Singer Co., with their patents to be more precisely specified later.

Singer Co. undertakes not to attack in any way the said construction of the kind still to be defined more precisely of Fritz Gegauf AG., with their patents to be more precisely specified later.

[fol. 3506] 4) Agreements already existing and having taken place before conclusion of the present agreement must be communicated reciprocally before signature and necessitate the approbation of both parties.

Steckborn, April 12, 1956.

[fol. 3509] IN UNITED STATES DISTRICT COURT

GOVERNMENT EXHIBIT 26 (S-3)

Agreement

The Singer Manufacturing Company (hereinafter called "Singer"), a Corporation organized and existing under the laws of the State of New Jersey, United States of America, is the sole owner of Harris U.S.A. Patent No. 2,693,778, filed on the 9th of June, 1952, and of corresponding reissue patent application No. 516,059 as well as the following corresponding Harris patents and patent applications:

		No.	dated:	filed:
British	Patent	730,436	May 21, 1953	May 21, 1953
Belgian	Patent	520,285	May 28, 1953	May 28, 1953
Canadian	Patent	514,053	June 28, 1955	June 6, 1952
French	Patent	1,083,582	June 5, 1953	June 5, 1953
Italian	Patent	509,535	June 5, 1953	June 5, 1953
Canadian	Appl.	688,268		June 22, 1955
German	Appl.	H 16,599		June 3, 1953
Japanese	Appl.	10,103		June 5, 1953
Swedish	Appl.	5,211		June 5, 1953

Fritz Gegauf Aktiengesellschaft, Bernina Nähmaschinenfabrik, in Steckborn (hereinafter called "Gegauf"), a Corporation organized and existing under the laws of Switzerland, is the sole owner of Swiss Patent No. 310,788, filed on the 31st of May, 1952, as well as the following patents and patent applications:

Italian Patent No. 501'172
German Gebrauchsmaster Registration No. 1,707,338
U.S.A. Patent application No. 358,377
German Patent application No. G 11,654

[fol. 3510] Singer and Gegauf realize that interference proceedings are about to be opened in the U.S.A. between the said Harris reissue application and one or more patent applications of Gegauf corresponding wholly or partly to its above mentioned patents and patent applications.

In view of the foregoing, Singer and Gegauf have entered into the following agreement.

1) Singer and Gegauf each undertakes not to do anything, either directly or indirectly and in any country, the result of which might restrict the scope of the claims of the other party relating to the subject matter of the above mentioned patents and patent applications.

Singer and Gegauf each undertakes, in accordance with the laws and regulations of the Patent Office concerned, to facilitate the allowance in any country of claims as broad as possible, as regards the subject matter of the patents and patent applications referred to above.

2) Singer undertakes not to attack Gegauf, either directly or indirectly, in any country:

a) on the basis of any of its above mentioned patents or patent applications.

b) for the present construction of the BERNINA Sewing Machine as shown on the photograph attached to the present agreement and signed on the back by both parties.

[fol. 3511] 3) Gegauf undertakes not to attack Singer, either directly or indirectly, in any country, on the basis of any of its above mentioned patents or patent applications.

4) Singer undertakes not to manufacture or sell a construction which would be a slavish copy either of the present construction of the Bernina Sewing Machines—taken as a whole—which is shown on the attached photograph, or of the feeler and multiple cams mechanism the said Bernina construction includes.

5) Singer undertakes to give to Gegauf, on request of the latter, the amical assistance of its patent attorneys for the defense of any of the above mentioned Gegauf patents or patent applications against an action in cancellation.

6) All agreements already concluded by either party and concerning or having a connection with any of the above mentioned patents or patent applications must be communicated to the other party for approval before signature of the present agreement.

7) Singer, as designated in this agreement, shall be understood as including The Singer Manufacturing Company, Singer Sewing Machine Company, their subsidiary, affili-

ated and associated companies and customers throughout the world.

Gegauf, as designated in this agreement, shall be understood as including Fritz Gegauf A.G., Bernina-Nähmaschinenfabrik, its subsidiary, affiliated and associated companies and customers throughout the world.

[fols. 3512-3514] In Witness Whereof, the parties have executed this agreement in duplicate in Zurich, this 14th day of April, 1956.

The Singer Manufacturing Company
By M. L. Waterman Vice-President.

Witness: ——

Fritz Gegauf A. G., Bernina-Nähmaschinenfabrik
By F. Gegauf.

Witness: ——

[fol. 3515] In United States District Court

Government Exhibit 27 (S-7)

The Singer Manufacturing Co.
Singer Building
149 Broadway
New York 6, N. Y.

Division of Research

In Replying Please Refer to 30-021 MLW:V3-9

Notes Dictated at Milan, Friday April 20, 1956.

The second meeting with Gegauf representatives was held in Zurich last Saturday afternoon. At the beginning of this talk, Mr. Gegauf said that he had called Mr. Vigorelli early that morning and told him of the fact that he was about probably to sign an agreement with us concerning his patents and our patents having to do with certain aspects of zigzag machines. In December of last year, Mr. Gegauf and Mr. Vigorelli had agreed together, through letters which each gave the other, not to interfere with the patents of the other concerning certain of their patents on multi-

cam machines. At that time, they had agreed that they would not do anything with respect to other parties concerning these same patents without advising the other.

We intended to talk with Mr. Vigorelli when we would come to Italy and to make the arrangements immediately we arrived, but he had before our arrival talked with Dr. Lando, and it was agreed that when we did arrive an arrangement would be made for a discussion, and today's talk was the result of that statement. What Mr. Vigorelli had on his mind was that now that Singer, Bernina and Vigorelli had arrived at certain agreements they should thereafter act in concert against others. This, we very promptly said to Mr. Vigorelli, was out of the question, and he was advised that what appeared to us to be proper action was for each one to prosecute his own patents and take care of any cases of infringement that might appear. We stated that, certainly, this would be Singer's attitude with respect to the patents that it owned, and cited, because we knew that he knew of it already, the actions that we had taken against Pfaff and against Durkopp with respect to industrial machines.

It came out during the talks with Vigorelli that, because of patents about which he had learned during our conversations with him in November, he had been able to present a case to Bernina which had resulted in Bernina's withdrawing its demand for a large sum of money for the infringement of its patents by Vigorelli. We had always suspected that this was the reason for the withdrawal of the demand by Bernina but had never had definite knowledge of this fact until during this present day's conversation. It came out also that Mr. Gegauf had been a very difficult man to deal with in the case of the Vigorelli talks. We had noted from remarks made by Mr. Gegauf that he had little respect [fol. 3516] for the Vigorelli patents or, in fact, for the Vigorelli Company's activities. Upon learning that there could be no joint action by the three companies who have been mentioned in prosecuting patents against all others in the field, that subject was dropped and remarks centered on what Mr. Vigorelli believed to be the infringement of his patents by Durkopp, and possibly by Phoenix, and what could be done about that (perhaps I should say what should be done about that). The conclusion was that it was proba-

bly best to await final action in the United States on the interference that has been met and the issuance of the German patent to Gegauf.

At this point, it should perhaps be mentioned that Mr. Stanford and I have discussed between ourselves whether we should say anything to Mr. Gegauf about our feeling that we could prosecute his patents that will be issued sometime within the next few months in the United States better than perhaps he could if we owned them, but we had decided not to say anything to Mr. Gegauf about this at this time.

In talking with Mr. Vigorelli's lawyer, Mr. Stanford dropped this view to him. The point was immediately understood, and the question was raised if we would have any objection if they were to pass the word on to Mr. Gegauf that they were raising this point. We said that, of course, we would have no objection but that we ourselves did not wish to do this, and we would not want the suggestion coming to Mr. Gegauf at this time as from us. If they wanted to suggest it, it was all right. We would, of course, under such an arrangement have to give a license to Gegauf under the patent that he would turn over to us. Mr. Stanford believes that he would be able before the patent is issued to rewrite the claims and make it stronger than it now is and that it is a fact that, being in the United States, we would be better able to prosecute any claims against this patent than would Mr. Gegauf.

The talks with Mr. Vigorelli and his lawyers were carried on in very good spirit. Mr. Vigorelli was told in very general terms of the agreement with Mr. Gegauf, except that we did not mention those very special ones that had to do with Singer's not building an exact one hundred percent copy of the present Gegauf nor any of the other details except that neither party would act against the other in connection with the particular patents or patent applications that were listed.

Following are some interesting sidelights that came out of the talks with Mr. Vigorelli. He now has no dealer in the United States. He had made an arrangement last fall with the firm of Maria, whom we have heard about as operating extensively in Honduras. We looked up this Maria and found him to be a very wealthy man. He has very considerable other interests and has informed Mr. Vigorelli

that he does not see how he can carry on with respect to sewing machines. I was wondering myself if it might not be that he has decided to take on representation of Japanese machines or some one Japanese machine rather than this Italian machine. This, of course, leaves Mr. Vigorelli in quite a bad spot. He has already reduced his production considerably and has let a number of employees go. He stated, however, that this was a good thing for him inasmuch as at one time when he had wanted to borrow some money from American interests, and I rather concluded [fol. 3517] that this was from some one of the American agencies that are operating in Italy, such loan had been refused because of the fact that he had in his organization as workers a number of Communists. He said that this letting of people go had given him an opportunity to get rid of those kind of people.

Mr. Vigorelli is, naturally, quite disturbed about the infringement by Durkopp, and perhaps by Phoenix of his patent. Mr. Stanford and I had noticed too that at the Milan Fair there was little interest on the part of the representation to demonstrate the new machine. Mr. Stanford believes there is a possibility this machine may infringe some of our patents. Mr. Vigorelli appeared to me during the conversations to be exceedingly tense and nervous. I do not believe that he is a well man. He even inquired if we could give him a lead as to who might take on his representation.

The result of our conversations with Mr. Vigorelli is surely that he understands that, in our view, he must act against all infringements of his patent, Singer must act against all infringements of its patent and Gegauf must do likewise.

M. L. Waterman.

[fol. 3518] IN UNITED STATES DISTRICT COURT

GOVERNMENT'S EXHIBIT 28

Received Patent Department, May 7, 1956, Answered —.

Monday.

Dear Chet & Marshall:—

Thank you for your letters. Sorry you have had no further word from White—probably is going to make us sweat it out. Glad to know "you all" won the bowling league championship. I've got money on you with MLW & Dave, and they have just written to Bridgeport telling them to "mow you down" or else. They say they want *pounds* of Joe's flesh.

We wrote Gegauf today telling of the dual relation of his U. S. attorney. When in Italy we laid careful plans for Gegauf to be advised by a third party that Singer could best handle the patent situation if we owned the Gegauf U. S. patent. Think it will bear fruit. This suggestion, with the U. S. attorney situation is pressure in the right direction.

Enclosed is the Belgium patent of Mschmitt. Have finally concluded that they filed automatic cam feature on Nov. 25, 1954. Topped again by a few days—"sho is hell"—but it seems to me that we have them in the United States. Could be much worse. Also, am enclosing a search through Italian patents made in Rome. You will see that corre-

[fol. 3519] sponding patent has been filed in Italy—am telegraphing Lando to please obtain copy of patent & send to us—(have copy made). Have you checked through British patent applications filed lately? Best check. Will see Messerschmitt on Thursday—no telling what will come out of the discussion. There is a crying need over here for a cylinder bed machine—to me its a *must*. Enclosed also is copy of drawing of Messerschmitts recent Italian patent on feeding mechanism.

Saw Frankel & Kirchner here today. They are going ahead with transmitter. Also want to play ball on needle-positioners. Hold enclosed green paper sketch of their new construction & I'll tell you about it when I get home.

(one day later)

Had a talk with Wurker—he is going to reconsider & let us know shortly. Feel that his mind has been changed very much against his will. My parting shot was "I can not understand an attitude, the result of which would and could only generate ill will between friends, one of which was a good customer of the other." Of course, prior to this statement I had informed him that even if his patent was valid, which I doubted, the only result that could possibly accrue to him was to put Singer to the annoyance of supplying the original attachment in Germany. He admitted there were no other patents of his in other countries.

2 days later

Saw the Messerschmidt people today—they don't want [fols. 3520-3522] to sell s/m business. Say they never again want to be in airplane business only. Tough to deal with. Knew of 319 m/c & want one to study before final decision.

Think we should push U. S. Perla 319 m/c application like hell. (Do you agree?) Bell has them believing they are ahead. They have term contracts with Bell & others.

One week from today & I'll be heading home.

Regards & Sincerely, JGS.

[fol. 3523] IN UNITED STATES DISTRICT COURT

GOVERNMENT'S EXHIBIT 30

Received Patent Department, June 14, 1956, Answered —.

31-026 MLW:V3

June 11, 1956.

C. F. Baumann, Esq.,
Milan, Italy.

Dear Mr. Baumann:

When I was in Milan, you will recall that we had a conference with Mr. Vigorelli and his attorneys. During this conference, the idea was put forward, I believe by Mr. Vigorelli's attorney, that it would be advantageous to all parties if Singer owned the Gegauf United States Patent Application No. 358,377. It was thought that it would be best if the suggestion that Gegauf transfer his patent application to Singer come to Mr. Gegauf from Vigorelli or some other source than Singer. It was left that Mr. Marcello Magnoni, Mr. Vigorelli's patent attorney, would write or otherwise convey to Mr. Gegauf's patent attorneys in Zurich the suggestion that the transfer be made and, at the same time, set forth its advantages to all parties.

I am expecting a visit here in New York from Mr. Fritz Gegauf, Jr., in July and, before his arrival, I would be interested to know if Mr. Magnoni has transmitted the suggestion to Mr. Gegauf's attorneys. Will you please make inquiry as to whether or not this has been done.

Very truly yours, M. L. Waterman, Vice President.

cc: Mr. J. G. Stanford, Elizabethport

[fol. 3524] IN UNITED STATES DISTRICT COURT

GOVERNMENT'S EXHIBIT 31

Received Patent Department, June 22, 1956, Answered —.

Compagnia Singer
Per Macchine da Cucire
Direzione Generale
Milano

Via Dante, 18

Per J. G. Stanford Esq., Elizabethport

19th June, 1956.

M. L. Waterman Esq.,
149 Broadway
New York, 6

Dear Mr. Waterman,

The matter raised in your letter of June 11th has not been lost sight of and coincident with the receipt of your letter we have to-day received a communication from Ing. Mainoni which would indicate that there are good prospects for the transfer of the Gegauf patent to Singer being brought about.

While I attach a copy of Mr. Mainoni's letter, I cannot do better than give you below a translation of same:

> "'"Subject: Interfering patents Singer/Gegauf/Vigorelli
>
> With regard to the question of the advantage of the American Singer Company being in possession of the different patents which might be useful in defence of sewing machines with multiple cams, the writer has lately had the opportunity of talking to the Patent Attorneys of Mr. F. Gegauf on a number of occasions and the conversations have developed in such a way that the possibility and advantage that the Gegauf patent application in the States be assigned to Singer could be considered in a definite way.

Because of the particular character of the question, this was done in such a way as to prompt an initiative to this end by Gegauf. The writer has good reasons to believe that such a point of view might be accepted by Gegauf.

I believe that in the next few days Messrs. Gegauf will get into touch with the writer with this end in view and should this hoped for occasion come about he will be able to report freely on the conclusion of the question which it is hoped will be a favorable one.

[fol. 3525] " " " "Obviously the writer has discussed the matter without in any way letting it be known that your firm was aware of the advances which would be made.

Yours very truly, signed Ing. Mainoni""""""

You can rely on us to follow the matter up.

Yours very truly, Compagnia Singer
per Macchine de Cucire.

cc: Mr. J. G. Stanford, E'port

[fol. 3526] IN UNITED STATES DISTRICT COURT

GOVERNMENT'S EXHIBIT 32

Compagnia Singer Per Macchine Da Cucire
Societa Italiana Per Azioni

Sede Milano—Stabilimenti Monza

Capitale Sociale Lit. 1.800.000.000

Milano, September 19th, 1956.

J. G. Stanford, Esq.
c/o Singer Nähmaschinen Akt.
Kusenterstreet 11
Munich.

Dear Mr. Stanford,

I had today the visit of Mr. Majnoni, Patent Advise; of Vigorelli, who gave me some information which I feel might prove useful to you during the conversations that—according to the same source—you are about to have with the Gegauf people.

I have immediately phoned our shop in Munich asking them to tell you to get in touch with me over the phone.

Meanwhile, summarized, I beg to send you the above information:

"Mr. Gegauf is today effectively willing to transfer his patent application in the U.S. to the Singer, without regard or with little regard to the financial side of the matter. The interest of Mr. Gegauf in the matter has been arisen by the following developments:

during the various discussions between Vigorelli and Gegauf (wherein Gegauf stated that the Vigorelli ZZ/A machine was infringing the Italian Gegauf patent), Mr. Gegauf has been strongly impressed by the fact that the U. S. Van Tuyl patent No. 2.590.907 might very dangerously anticipate its invention. In effect, a third party who might know that the said Van Tuyl patent exists might take steps for having the Gegauf German patent held not valid.

Mr. Gegauf is particularly and prevailingly interested to have a note objectionable patent in Germany, and for such

end he made informally known to Mr. Vigorelli that the withdrawing of the Vigorelli application in the U. S. would be greatly appreciated, to prevent the issuance of a printed patent wherein the fact that the Van Tuyl patent exists will be made known to third parties. Informally, through Mr. Majnoni, Vigorelli agreed with the withdrawing of his U. S. application on condition that any other interested party (say, unnamedly, Singer) agree too, and that another application (say, consequently, the Gegauf one) might be put at disposal of the said other interested [fol. 3527] party in lieu of the Vigorelli one, to make broader the protection of the machines in the U.S., in addition to the Harris patents.

Mr. Gegauf's mind has been therefore directed to the convenience of transferring his U.S. application to Singer.

Mr. Majnoni pointed out that Vigorelli would consequently drop any direct means adapted to protect his machines in the U.S., but he is quite sure that Singer will take care of the protection of the machines of the general type of interest, by making use of the owned Harris and Gegauf patents.

Further, Mr. Majnoni thinks that the claims of the Gegauf still pending application probably might be completed by ones in which some of the Vigorelli features, if of interest, would be protected."

Always at your disposal for any further requirements, I remain,

Yours very truly, S. Lando.

[fols. 3528-3529] IN UNITED STATES DISTRICT COURT

GOVERNMENT EXHIBIT 33

Fritz Gegauf Limited
Steckborn (Switzerland)

Confidential

Mr. M. L. Waterman
Vice-President
Singer Sewing Machine Company
Singer Building
New York, N. Y.
U.S.A.

FH

September 3rd, 1956.

Dear Mr. Waterman,

We refer to the recent visit of our Mr. Gegauf junior with party at your office in New York City, and thank you for your kind reception.

Your suggestion as to the pending U.S. patent re automatic embroidery stitching has been taken up with Mr. Gegauf senior and we can inform you that we might be interested in such an agreement.

We therefore kindly ask you to put your suggestion in writing and let us have it at your earliest convenience.

We agree that something should be done against Japanese competition in your country and maybe South America and are therefore looking forward to your early reply.

Yours very truly, Fritz Gegauf Limited.

[fol. 3530] IN UNITED STATES DISTRICT COURT

GOVERNMENT'S EXHIBIT 35

31-026 MLW:V9

September 7, 1956.

Confidential

Mr. Fritz Gegauf
Bernina Mahmaschinen Fabrik
Steckborn, Switzerland

Dear Mr. Gegauf:

Your letter of September 3rd and mine of September 5th must have crossed in the mails, as I received yours yesterday the 6th. I have accordingly today cabled you as follows:

> "Reyourlet September 3 And My Letter September 5 Which Crossed in Mail Sanford and I Will Be in Germany September 18 Through 25 Stop We Feel Arrangement Can Be Equally Advantageous To Both Stop We Also Believe That if Your New York Attorney Were to Meet With Stanford With Authorization From You to Disclose Contents of Patent Application Considerable Time Would Be Saved and Best Procedures to Take Would Result Stop If You Agree Would Suggest You Cable Your Attorney To Meet With Stanford Early Next Week"

I believe that this cable is quite self-explanatory. Mr. Stanford does feel that if he has had the opportunity before we proceed to Europe this time, to know just what has been the patent action in Washington with respect to both your and our applications he will be in a better position to discuss intelligently affairs of mutual advantage to us, and to have prepared a draft which might be the basis for an agreement concerning our respective applications. I trust that you will understand that this is the only reason for our offering the suggestion that your attorney might discuss with us the status of your application and any proceedings that he has had with the patent office in Washington.

We do believe that it may be possible that we can both

strengthen our positions with respect to the Japanese competition which you mention, and I hope that we can again meet and discuss our respective situations. As I advised in my previous letter Mr. Adamson will be able to judge better when and where we can meet than he can here as [fol. 3531] we do not have any firm itinerary fixed following our arrival at Frankfurt on the 18th.

Very sincerely yours, M. L. Waterman.

[fol. 3532] IN UNITED STATES DISTRICT COURT

GOVERNMENT'S EXHIBIT 36

September 12, 1956.

Leon M. Strauss, Esq.,
Suite 3104-5,
535 Fifth Avenue,
New York 17, N. Y.

Dear Mr. Strauss:

This will confirm our today's telephone conversation in which I advised you that Singer is licensed under any claims that Mr. Gegauf may obtain in his U.S. patent application No. 358,377 and Bernina is licensed under any claims which Singer may obtain in its Harris patent application Re 516,058.

This will also confirm my statement that Singer is interested in acquiring all of the rights in the Gegauf patent application No. 358,377 and for that reason I wish to have knowledge of the file contents before I leave for Europe on Monday, September 17.

Thanking you for your cooperation in this matter, I am

Yours very truly, J. G. Stanford, Patent Department.

[fol. 3533] IN UNITED STATES DISTRICT COURT

GOVERNMENT'S EXHIBIT 37

air mail Personal

October 9, 1956.

Dr. S. Lando,
Compagnia Singer per Macchine
da Cucire,
Via Dante 18,
Milan, Italy.

Dear Dr. Lando:

Thank you for your telephone call and for your letter which I received when in Munich.

We conferred with Mr. Gegauf and quite an array of the top management of the Bernina Company relative to the Gegauf United States patent application, and found he placed great importance on the claims which he expected to obtain in the United States.

In fact he wanted a million dollars for the application. After a lengthy conversation he finally intimated that he would be willing to accept two-hundred fifty thousand dollars. As this sum was many times more than we would consider paying for this patent application we ended the negotiations on a friendly basis.

I thought you would like to have this information if the subject should come up in talking with Mr. Vigorelli or his attorney.

Sincerely, ——, ——.

[fol. 3534] IN UNITED STATES DISTRICT COURT

GOVERNMENT'S EXHIBIT 38

October 22, 1956.

M. L. Waterman, Esq., Vice-President,
The Singer Manufacturing Company,
Singer Building, New York.

Dear Mr. Waterman:

Harris vs. Gegauf Patent Interference #88212

Previous to our recent trip abroad the United States Patent Office declared an interference between our Carl Harris U. S. patent application and that of Fritz Gegauf. We have heard nothing from Gegauf or his U. S. attorneys concerning this interference since our recent trip.

You will recall that under our Singer-Gegauf agreement it is incumbent upon both parties to settle this interference in accordance with the patent laws of the United States. Since we do not wish to initiate any conference with Mr. Leon Strauss, Gegauf's United States attorney, we think it would be well at this time to write directly to Fritz Gegauf for the purpose of stimulating him into action. It may be that Gegauf will advise his United States attorneys to contact us for the purpose of settling the present interference, but on the other hand, Gegauf may extend to us another plan for disposing of his United States patent rights.

[fol. 3535] Enclosed is a draft of a letter which we propose to send to Gegauf. We shall take no further action in this matter until we have heard from you as to whether you approve of this proposed action.

Yours very truly, The Singer Manufacturing Company, ——, ——, Patent Department.

In triplicate.

Enclosure—

Draft Letter.

[fol. 3536] IN UNITED STATES DISTRICT COURT

GOVERNMENT'S EXHIBIT 39

Proposed Letter

Mr. Fritz Gegauf,
Fritz Gegauf A.G.,
Bernina Nähmaschinenfabrik,
Steckborn, Switzerland.

Dear Mr. Gegauf:

As you know, the United States Patent Office has declared an interference between your United States patent application and Singer's patent application relating to ornamental stitch zigzag sewing machines. Such an interference is declared by the Patent Office to determine which of the conflicting applicants is to be awarded priority with respect to the subject matter common to the conflicting applications.

Our agreement provides that this interference is to be settled in accordance with the patent laws of the United States. However, since such interference proceedings are usually time consuming and costly to the parties involved, it would appear that it would be advantageous for us to settle the interference between ourselves rather than to continue the proceeding and rely upon the United States Patent Office finally to award a priority. On the other hand, it is most important that the interference be settled properly so that the prevailing party will ultimately be awarded a valid patent. Therefore, it would now appear to be in order for the attorneys for Singer and Bernina to get together with a view to determining the best manner of [fol. 3537] settling this interference. Perhaps if the United States attorneys for both parties had a conference relative to this matter the exact procedure for terminating the interference could be readily and properly determined. If you agree to this suggestion you may wish to advise your United States attorneys accordingly. We shall take no further action in connection with the present interference until we have heard from you.

It was pleasant to again see beautiful Lake Constance and to be with you and your staff.

Yours very truly, ——; ——.

CC: Waterman.

[fol. 3538] IN UNITED STATES DISTRICT COURT

GOVERNMENT'S EXHIBIT 40

Received Patent Department, October 24, 1956, Answered—.

The Singer Manufacturing Co.
Singer Building
149 Broadway
New York 6, N. Y.

In Replying Please Refer to MLW:V9

October 23, 1956.

J. G. Stanford, Esq.
Elizabethport, New Jersey

Dear Mr. Stanford:

Harris vs. Gegauf Patent Interference No. 88212

I have your letter of October 22nd, with the enclosed draft addressed to Mr. Gegauf reference patent proceedings between Harris & Gegauf applications. I am in full agreement with the suggestion that your proposed letter go forward to Mr. Gegauf just as it is drafted.

Yours very truly, M. L. Waterman, Vice President.

Submitted in Triplicate.

[fol. 3539] IN UNITED STATES DISTRICT COURT

GOVERNMENT'S EXHIBIT 41

October 24, 1956.

Mr. Fritz Gegauf,
Fritz Gegauf A.G.,
Bernina Nähmaschinenfabrik,
Steckborn, Switzerland.

Dear Mr. Gegauf:

As you know, the United States Patent Office has declared an interference between your United States patent application and Singer's patent application relating to ornamental stitch zigzag sewing machines. Such an interference is declared by the Patent Office to determine which of the conflicting applicants is to be awarded priority with respect to the subject matter common to the conflicting applications.

Our agreement provides that this interference is to be settled in accordance with the patent laws of the United States. However, since such interference proceedings are usually time consuming and costly to the parties involved, it would appear that it would be advantageous for us to settle the interference between ourselves rather than to continue the proceeding and rely upon the United States Patent Office finally to award a priority. On the other hand, it is most important that the interference be settled properly so [fol. 3540] that the prevailing party will ultimately be awarded a valid patent. Therefore, it would now appear to be in order for the attorneys for Singer and Bernina to get together with a view to determining the best manner of settling this interference. Perhaps if the United States attorneys for both parties had a conference relative to this matter the exact procedure for terminating the interference could be readily and properly determined. If you agree to this suggestion you may wish to advise your United States attorneys accordingly. We shall take no further action in connection with the present interference until we have heard from you.

It was pleasant to again see beautiful Lake Constance and to be with you and your staff.

Yours very truly, ——, ——.

CC: Mr. M. L. Waterman.

[fol. 3541] IN UNITED STATES DISTRICT COURT

GOVERNMENT'S EXHIBIT 42

November 7, 1956.

M. L. Waterman, Esq., Vice-President,
The Singer Manufacturing Company,
Singer Building, New York.

Dear Mr. Waterman:

Harris vs. Gegauf Patent Interference No. 88,212.

Please refer to our prior letter to you of October 22, 1956 in which was enclosed a copy of a letter which we sent to Fritz Gegauf on October 24, 1956. Enclosed is a copy of a letter dated November 3, 1956 which we have received from Mr. Fritz Gegauf.

You will note from Mr. Gegauf's letter that he proposes to have Mr. Leon Strauss, his U.S. patent attorney, get in touch with us for the purpose of settling our above noted interference in an amicable manner. We shall, of course, keep you advised as to any further developments in this matter.

Yours very truly, The Singer Manufacturing Company, ——, ——, Patent Department.

In triplicate.

Enclosure—

Letter

[fol. 3542] IN UNITED STATES DISTRICT COURT

GOVERNMENT'S EXHIBIT 43

September 9, 1957.

M. L. Waterman, Esq., Vice-President,
The Singer Manufacturing Company,
Singer Building, New York.

Dear Mr. Waterman:

Gegauf United States Patent

Enclosed is a proposed letter to Mr. Gegauf. If you are in agreement with us that Gegauf should be approached again on this matter and approve of the letter in its present form, will you please send it on to Mr. Gegauf.

It is our feeling that we have nothing to lose and much to gain by again seeking to obtain the rights in the Gegauf United States patent application.

Yours very truly, The Singer Manufacturing Company, ——, ——, Patent Department.

Enclosure—

Proposed letter.

In triplicate.

[fol. 3543] Proposed Letter

Mr. Fritz Gegauf,
Fritz Gegauf A.G.,
Bernina Nähmaschinenfabrik,
Steckborn, Switzerland.

Dear Mr. Gegauf:

You will recall that under the terms of our patent agreement the interference between your United States application No. 358,377 and our United States Harris reissue application No. 516,059 has been settled.

We have now been notified by the United States Patent Office that our United States Harris application, which was filed some seven days after the filing of your application, is ready to be issued as a patent. Furthermore, we

anticipate within the near future to have issued to us several other United States patents relating to ornamental stitch sewing machines. We presume that in a short time a United States patent will be granted upon your application.

You are no doubt aware that recently the many Japanese sewing machine manufacturers have brought out a large variety of ornamental stitch machines which would appear to come within the terms of claims which may be awarded in the United States with respect of the above Gegauf and Singer patents. We have reason to believe that all of the very many United States sewing machine importers will [fol. 3544] wish to deal in such Japanese ornamental stitch machines, and that patent suits against each of these importers may be necessary if our respective patents are to be enforced.

Your may agree with us that under the terms of our present agreement neither party is in a position effectively to protect itself through patents in the United States with respect to this threatened competition, particularly when the competing machines are copies after both Bernina and Singer models.

In the event that you may believe that our mutual interests could be best served through further consideration of the present matter I would be pleased to hear from you.

Yours very truly, ——, ——.

[fol. 3545] IN UNITED STATES DISTRICT COURT

GOVERNMENT'S EXHIBIT 44

Received Patent Department, September 13, 1957,
Answered—

M. L. Waterman, 149 Broadway, New York 6, N. Y.

September 12, 1957.

Mr. Fritz Gegauf
Fritz Gegauf A.G.
Bernina Nahmaschinenfabrik
Steckborn, Switzerland

Dear Mr. Gegauf:

You will recall the terms of our patent agreement and I know you were advised that as we had agreed, pursuant to this agreement, the interference between your United States application No. 358,377 and our United States Harris reissue application No. 516,059 was settled.

We have now been notified by the United States Patent Office that our United States Harris reissue application is about to be issued as a patent. We presume, therefore, that in a short time a United States patent will be granted upon your application. We also anticipate within the near future that there will be issued to us a number of other United States patents relating to ornamental stitch sewing machines.

When I had the pleasure of meeting you last fall we had some discussion relative to the procedures that might be followed to enforce the patents referred to in the first paragraph of this letter, when issued, against infringing manufacturers who primarily are manufacturers in other countries seeking markets in the United States, and more and more throughout the entire world. These manufacturers are bringing out a large variety of ornamental stitch machines which would appear to come within the terms of claims which may be awarded in the United States with respect of the aforementioned Singer and Gegauf patents. A proper enforcement of these patents may make it necessary to instigate patent suits against each of the importers

in the United States, of whom there will perhaps be many. I think you will agree with me that neither one of us alone can protect himself most effectively. In our discussion we deferred any further action until the applications might have progressed further in the Patent Office.

I am presently planning to make a short trip to Europe and will be there within the next two or three weeks. I had not planned on going to Switzerland but it occurs to me that in view of the recent development of these patent applications, of which I have just been advised, it may be in our mutual interest to resume conversations while I am abroad on this trip. I do not know how long a time may elapse before I will again be overseas. If that will be convenient to you I would appreciate it if you would drop me [fol. 3546] a line. I expect to be in Europe for perhaps the first three weeks in October, in France, Germany, and Italy, and would, of course, endeavor to meet your convenience as to a date when I would be passing through Switzerland. I hope that I may have some reply from you before I leave the United States, but if by chance I have left before your reply arrives, my office will of course cable me letting me know of your wishes.

Yours very truly, M. L. Waterman.

MLW:rk

[fols. 3547-3548] IN UNITED STATES DISTRICT COURT

GOVERNMENT'S EXHIBIT 45

Mr. M. L. Waterman
149 Broadway
New York 6, N. Y., U. S. A.

Steckborn, September 17th, 1957

Fritz Gegauf
Steckborn/Schweiz

Dear Mr. Waterman,

Thanking you for your letter of September 12th, I am pleased to reply by return of mail that I am looking forward to your visit in October for discussion either in Zurich or Steckborn regarding the mutual enforcement of our US application No. 358,377 and the Harris reissue against infringing products of the foreign manufacturers.

Please advise me as soon as possible by cable or telephone of the exact date when you will be in a position to meet me in Zurich or Steckborn.

Anticipating the pleasure of your visit, I remain with kind regards,

Yours very truly, ———.

[fol. 3549] IN UNITED STATES DISTRICT COURT

GOVERNMENT'S EXHIBIT 47

September 23, 1957.

M. L. Waterman, Esq., Vice-President,
The Singer Manufacturing Company,
Singer Building, New York.

Dear Mr. Waterman:

Gegauf United States Patent Application No. 358,377 filed May 29, 1953.

Enclosed are the following specimen documents:

Agreement (1) (Deft. Ex. 36)
Agreement (2) (Deft. Ex. 37)
Assignment (Deft. Ex. 38)

The enclosed specimen documents have been prepared for your use in the event that Gegauf should be willing to sell to Singer its above identified United States application which forms the subject of the present license between Singer and Gegauf.

Agreement (1) is suggested for use in the event that Gegauf should be willing to sell us the application for a single lump-sum payment. This agreement has the advantage of providing Singer with an irrevocable title to the subject application and, furthermore, under this agreement it would not be incumbent upon Singer to deal any further with Gegauf in connection with this general subject.

[fol. 3550] The enclosed Agreement (2) is suggested for use in the event that Gegauf should be willing to sell Singer the subject application in consideration for yearly payments which would be payable throughout the lives of any patents which should be issued in connection with the subject application. This agreement is advantageous in that Singer could at any time terminate the agreement and revert back to the original Singer-Gegauf license in which event Singer would be liable to Gegauf for no further yearly payments. In this agreement we have suggested the use of fixed yearly payments rather than royalties based upon the number of Singer machines sold as to obvi-

ate completely the necessity for Singer to make yearly reports to Gegauf as to the quantities of Singer machines manufactured and/or sold under such agreement.

The enclosed assignment could be used in connection with either of the two suggested agreements so as to facilitate the required recording of the sale in the United States Patent Office. Naturally, it would be preferable to record in the Patent Office such a simple assignment as opposed to the recordation of the agreement itself which would include information which is not pertinent for recording purposes.

[fols. 3551-3552] In response to your oral request we have noted below the names and addresses of the law firms that represent us in patent matters in Germany and Switzerland:

Germany: Dr. E. Wiegand, Ballindamm 26, Hamburg 1, Germany.

Switzerland: Messrs. Deriaz, Kirker & Cie., Rue du Mont-Blanc 14, Geneva, Switzerland.

Yours very truly, The Singer Manufacturing Company, ——, ——, Patent Department.

Enclosures—

Agreements 1 and 2

Assignment

In triplicate

[fol. 3553] In United States District Court

Government's Exhibit 49

M. L. Waterman, c/o

October 17, 1957.

MLW/OS
Mr. Milton C. Lightner,
President,
The Singer Manufacturing Co.,
New York.

Dear Mr. Lightner,

Yesterday Mr. Stanford and I met with the Gegauf people and discussed from mid-morning until early evening the matter of the assignment of the Gegauf basic U.S. patent on its automatic cam-block zigzag machine. Such assignment like others that we have concluded will give Singer complete ownership of the patent (or as it is the case in this instance, patent application) and in return will license Gegauf to build and to sell his machines just as he is now doing.

Unfortunately, although I do not think it will ultimately make any difference, their patent attorney could not be present. I tried to keep the meeting small in numbers and was partially successful, and to treat the subject as one that was not overly important to Singer, but one that should be of equal value to both. In no way will such an agreement restrict sales by either party. Naturally with the language barriers there is always some difficulty in bringing out all points, and it is not other than normal that there may be suspicion on the side of the smaller Company to be allayed. I believe we were successful in doing this, and when their patent attorney is able to study the suggested draft of the agreement which Mr. Stanford prepared, that Gegauf will sign.

The price agreed upon is $40,000. There was considerable discussion in reaching this figure. It comprehends the outright purchase by Singer of their existing patent application with all its divisions. One of the reasons I think agreement may be assured (I can always be wrong) is that,

as agreed yesterday, word has been cabled to their patent agent in New York to let Singer see their patent file with the Patent Office in Washington.

Their patent lawyer and our's are to get together shortly, and as it now stands, to proceed to finalize the terms of the agreement in accordance with our discussion of yesterday. It may be that there will be some questions raised which will have to be clarified through correspondence after my [fol. 3554] return to New York, but I would say that as of now it looks as though agreement—if not already entirely reached—can be arrived at in a reasonably short time. I hope to hear by next Tuesday at Frankfort further particulars concerning the attorney's actions toward the finalization of the agreement.

Yours very sincerely, M. L. Waterman

Copy to Mr. Stanford.

[fol. 3555] IN UNITED STATES DISTRICT COURT

GOVERNMENT'S EXHIBIT 50

WESTERN UNION

P CDU5 06 140/139 1/50 PD INTL FR—CD FRANKFURTMAIN VIA COMMERCIAL 24 NFT—

PYECOMBE FOR STANFORD—
ELIZABETHPORT (NJER)—

1957 OCT 24 AM 9 18

KIRKER ADVISES OF LATEST THREE POINTS PUT FORWARD FIRST 125000 SINGLE OR 25000 YEARLY LATTER FOR THREE YEARS CERTAIN BUT BELIEVES HALF THESE FIGURES MIGHT BE ACCEPTED SECOND ASKS EXCEPTIONS PFAFF VIGORELLI NECCHI THIRD WISHES DIVESIONAL CLAIM NOT INCLUDED AS STATED INTENDS LICENSING THIS TO SOME—

END 1———

[fol. 3556] WESTERN UNION

P CDU5 06 2/50—

1957 OCT 24 AM 9 18

OTHER INTERESTED EUROPEAN COMPANY STOP ADVISED KIRKER TO PASS WORD TO WILLI WITHOUT MAKING ANY COMMENT ON FIRST TWO THAT THIRD WILL ALMOST SURELY MAKE AGREEMENT IMPOSSIBLE AS WE ALL ALONG WERE DISCUSSING APPLICATION INCLUDING DEVISIONS AND POSSIBILITY OF CHANGES ALSO WILL HAVE TO AWAIT YOUR EXAMINATION OF ORIGINAL AND—

END 2———

[fol. 3557] WESTERN UNION

P CDU5 06 3/39—

1957 OCT 24 AM 9 18

DIVISION STOP ADAIN EMPHASIZED FOR KIRKER TO TELL WILLI THAT APPLICATION AND DIVISION IS IN OUR OPINION LEAK STANDING ALONE STOP WILLI SENDING NECESSARY CABLE TO STRAUSS THIS MORNING STOP APPRECIATE YOUR COMMENTS ON FOREGOING BY IMMEDIATE CABLE—

WATERMAN—

—125000 25000 PFAFF—

[fol. 3558] IN UNITED STATES DISTRICT COURT

GOVERNMENT'S EXHIBIT 51

Received Patent Department, October 24, 1957. Answered—.

WESTERN UNION

International Communications

To get fast, dependable service, write in "Via W. U. Cables" here

Call Letters FDK INTL Charge to FAX Elizabeth, N. J.

To October 24, 1957
Via W. U.

Mr. M. L. Waterman

Gersinger-Frankfurtmain, Germany.

Value of Gegauf patent to Singer greatly decreases when (other people*) are licensed. However we understand Vigorelli is necessary licensee. We favor yearly plan but with 15,000 yearly. Divisional claim must be included. Suggest Gegauf submit to Singer draft agreement based on our yearly plan.

J. G. Stanford.

* Refers to European's see G. Ex. 50.

[fol. 3559] IN UNITED STATES DISTRICT COURT

GOVERNMENT'S EXHIBIT 52

Received Patent Department, October 28, 1957, Answered—

Dériaz, Kirker & Cie
Bureau D'Ingénieurs-Conseils En Propriété Industrielle
Fondé En 1877 Par
E. Imer-Schneider

air mail

Mr. J. G. Stanford,
The Singer Manufacturing Company,
Patent Department,
Elizabethport F.,
New Jersey, U.S.A.

Genève

Rue Du Mont-Blanc 14

Date: 25th October, 1957.

Dear Mr. Stanford,

re: Gegauf's U.S. Patent Application Serial No. 358,377.

Please find below a résumé of our various telephone calls with Mr. Willi, concerning the above case:

Gegauf filed some time ago a divisional application for a part of the subject matter of the above U.S. patent application. The contemplated agreement must relate—according to Mr. Gegauf's point of view—to the basic application only, in its present form. In other words, the divisional application will not be included in the agreement. We replied to Mr. Willi that certainly, such a condition will represent a serious obstacle to reaching an agreement and we pointed out that it will be necessary that you inspect:

1) the original documents filed in connection with the basic application in the U.S.A.

2) the contents of the divisional application

3) the contents of the original application in its present form.

in order that you can decide whether you are still interested in buying Application No. 358,377.

We asked Mr. Willi why Mr. Gegauf wished to keep for himself the original application since, at another time, Mr. Willi said that Mr. Gegauf is not very interested in said invention as regards the U.S.A. Mr. Willi answered that certain European companies are highly interested in the subject matter of the divisional application and that Mr. Gegauf thinks he could sell said divisional application to them. We replied that this represents probably a supplemental difficulty for reaching an agreement with Singer. [fol. 3560] A second point raised by Mr. Gegauf was that he wished to be informed when Singer intends to introduce a legal action against a European company, and that such an action could be introduced only after Mr. Gegauf has given his consent. We pointed out that it would be better to set forth the condition in another form, viz. to include in the agreement the name of the companies which Mr. Gegauf has in mind, and to restrict said condition to such companies. Apparently (but it is not absolutely sure), there are only three companies involved:

Vigorelli
Necchi
Pfaff

The third point of Mr. Gegauf's proposal relates to the payments. He suggests U.S. $125,000 if the payment is made once for all, and U.S. $25,000 per year, as long as Singer keeps the patent, with a minimum duration of the agreement for three years. On this point also, we told Mr. Willi frankly that these sums look extremely high and that we were afraid an agreement could not be reached with such amounts.

From the conversation with Mr. Willi, we were under the impression that probably an agreement might be obtained on the basis of approximately half said sums. Mr. Gegauf considered your proposal of U.S. $40,000 as a minimum, subject to discussion and similarly, he made a counterproposal which is a maximum, also subject to discussion.

The conclusion of our various telephone calls was that Mr. Willi would send a cable (yesterday) to Mr. Gegauf's attorney in the U.S.A., to authorize you to take cognizance

of the original papers of the above application, of the papers of the divisional application and of the papers of the basic application in its present form and that, according to the result of your examination, the discussion with Gegauf would be resumed if you are still interested in acquiring Application No. 358,377.

Since in the meantime we had reported the situation by telephone to Mr. Waterman in Frankfurt, we added that, for Singer, the problem was only to buy the whole thing, i.e. the subject matter of the original basic application in the U.S.A., with all possibilities of divisions and continuations, i.e. including the divisional applicaton filed by Gegauf, and that there was no queston of making two separate agreements and two separate payments.

Awaiting your instructions, we remain,

Very truly yours, Dériaz, Kirker & Cie, G. E. Kirker.

A duplicate of this letter is included for Mr. Waterman.

[fol. 3561] IN UNITED STATES DISTRICT COURT

GOVERNMENT'S EXHIBIT 53

October 30, 1957.

Mr. G. Kirker,
Deriaz, Kirker & Cie.
Rue Du Mont-Blanc 14,
Geneva, Switzerland.

Dear Mr. Kirker:

Gegauf's U.S. Patent Application Serial No. 358,377

Thank you for your letter of October 25, Ref. K/JP, giving us a résumé of your talks with Mr. Willi.

The U.S. Application Serial No. 358,377 of Gegauf has been examined by us and we find that this single application is based upon two Swiss patent applications, namely Serial No. 80,461, May 31, 1952 and Serial No. 91,361, April 22, 1953. There exists another U.S. Gegauf application Ser. No. 435,832 which we have not seen but which we presume

corresponds to a Swiss application of June 18, 1953 and a British patent No. 755,891.

Mr. Strauss, the U.S. Patent Agent of Gegauf, advises us that he has prepared and sent to Mr. Gegauf for execution a third U.S. patent application which claims certain features which the U.S. Patent Office would not allow him to claim in application No. 358,377. This we had not known previ- [fol. 3562] ously. In other words this third unfiled U.S. application has been carved out of U.S. application No. 358,377.

The second U.S. application No. 435,832 we believe relates to the idea of having two zigzag mechanisms, one for fancy stitching and one for the usual zigzag stitching with means for shifting at the will of the operator from one mechanism to the other. If this is the "divisional" application to which Mr. Gegauf refers, and we are now of the opinion that it is, then we are not interested in it and it is not necessary that it be included in the proposed agreement.

We are, however, interested in acquiring ownership to the third unfiled U.S. patent application as it discloses and claims material taken from the original U.S. application No. 358,377, about which we have all along been negotiating. Without having this, the acquisition of the original application would be of only small value to us, if any.

As to the second point, we would if necessary, agree to permit Necchi and Pfaff in addition to Vigorelli to continue to sell their respective machines in the United States without fear of being charged with infringement of the claims which may be allowed as a result of U.S. patent application No. 358,377.

The third point, which relates to the value to be placed upon application No. 358,377, we have to say that we would [fols. 3563-3564] be willing to pay $62,500 for the outright sale of application No. 358,377 to Singer. If you find it necessary, we authorize you to go as high as $75,000 for the outright sale to Singer.

We suggest that you again contact Mr. Willi and make known to him our position in this matter, viz.:

Singer will accept the U.S. patent application Serial No. 358,377 as it now stands, together with any divisional applications which may be carved directly therefrom.

Singer will not ask that Gegauf's U.S. application No. 435,832 be included in the agreement.

Singer will agree to permit Necchi, Pfaff and Vigorelli to continue to sell their respective sewing machines in the United States as far as U.S. Patent application No. 358,377 is concerned.

Singer will pay $62,500 for the outright sale of patent application No. 358,377 by Gegauf to Singer. If necessary, you are authorized to offer $75,000 for the application.

In view of our concessions we hope that you can obtain acceptance of our above proposal.

Yours very truly, The Singer Manufacturing Company, ——, - -, Patent Department.

CC: Mr. M. L. Waterman, Mr. D. P. Kircher

* * * * * * *

[fol. 3565] IN UNITED STATES DISTRICT COURT

GOVERNMENT'S EXHIBIT 55

air mail

November 7, 1957.

Mr. G. Kirker,
Deriaz, Kirker & Cie,
Rue Du Mont-Blanc 14,
Geneva, Switzerland.

Dear Mr. Kirker:

Gegauf's United States Patent Application Serial No. 358,377.

We have received your letter of November 4, 1957 and we agree with you that the best course to pursue would be for you to interview Messrs. Willi and Gegauf at your earliest opportunity. We trust that as a result of this meeting there will be prepared a written proposal which will be acceptable to both Gegauf and Singer.

We noted that you are ordering printed copies of the Gegauf Swiss patents Nos. 310,788 and 318,123. We believe

that we have correct copies of these two patents but we would be pleased to receive further copies from you. We have always been somewhat mystified over these two patents, particularly since we have what purports to be certified copies of the original Gegauf Swiss patent applications Nos. 80,461 and 91,361 which matured respectively into patents Nos. 310,788 and 318,123. It appears that Swiss patent No. 310,788 discloses only a portion of the invention [fol. 3566] shown in its application No. 80,461. For example, patent No. 310,788 contains only Figs. 1 and 2 which correspond respectively to Figs. 12 and 13 of its application 80,461 which contains Figs. 1-20, inclusive.

The corresponding United States Gegauf application Serial No. 358,377, May 29, 1953, contains Figs. 1-20 of which Figs. 1-18 correspond respectively to Figs. 1-18 of the parent Swiss application No. 80,461. Figs. 19 and 20 of this United States Gegauf application correspond to Figs. 1 and 2 of Swiss Gegauf application No. 91,361 which matured into Swiss patent No. 318,123 containing the same two figures. Figs. 19-21 of the Swiss Gegauf application No. 80,461 are not reproduced in the United States application Serial No. 358,377 or in either o the two above noted Swiss patents. We presume, therefore, that the matter disclosed in the two original Gegauf Swiss applications and not included in the two issued Swiss patents has been abandoned by Gegauf.

Yours very truly, The Singer Manufacturing Company, ——, ——, Patent Department.

CC: Mr. M. L. Waterman, Mr. D. P. Kircher.

[fol. 3567] IN UNITED STATES DISTRICT COURT

GOVERNMENT'S EXHIBIT 56

Received Patent Department, November 22, 1957,
Answered—.

air mail

Dériaz, Kirker & Cie
Bureau D'Ingénieurs-Conseils En Propriété Industrielle
Fondé En 1877 Par
E. Imer-Schneider

18th November, 1957.

Mr. J. G. Stanford,
The Singer Manufacturing Company,
Patent Department,
Elizabethport F.,
New Jersey, USA

Genève

Rue du Mont-Blanc 14

Dear Mr. Stanford,

re: Gegauf's patent application in the U.S.A.
Serial No. 358,377

On Friday 15th, the writer had an interview in Bernina's office, in Zurich, with Mr. Gegauf Senior, Mr. Gegauf Junior, an executive of Bernina and Mr. Willi.

We first tried to clear up the position as regards the subject matter of the various applications referred to in your letter of the 30th October.

Application No. 435,832 is quite independent of Serial No. 358,377 and is neither a division nor a continuation-in-part of the latter. It relates to an entirely different invention outside the field of Serial No. 358,377. This was explained to us by Mr. Willi.

Mr. Strauss suggested to Gegauf to file in the U.S.A. two divisional applications deriving from Serial No. 358,377. Later, it was agreed to prepare a single application which

is the one about to be filed now and which Mr. Strauss has just prepared. It is the application referred to in the last paragraph of page 1 of your letter of the 30th October, 1957. The subject matter of said application—as we were told—does not appear in Swiss patents Nos. 310.788 and 318.123. It was removed from the Swiss applications and no division was filed on this point. It seems that Gegauf realized the importance of this point, only during the prosecution in the U.S.A., i.e. when it was too late for obtaining the protection in Europe on this specific point which is, as we understand, the one you are interested in.

From the beginning of the interview, we saw that the position of Gegauf as regards the contemplated agreement with Singer has been considerably altered since your visit in Zurich and even since our last telephone conversation with Mr. Willi.

[fol. 3568] Mr. Gegauf explained first that he has no objection against the idea of making an agreement with Singer, in order to stop as far as possible Japanese competitors on the U.S. market but he added that such an agreement might be reached under certain conditions only, which he pointed out as follows:

a) The agreement must contain a clear undertaking from Singer, according to which Singer will not manufacture in the U.S.A. a device according to Gegauf's applications to be involved in the agreement.

b) Gegauf would retain the right to grant a licence to a European company if such a company asks for a licence for the invention object of the new application just about to be filed by Mr. Strauss (Mr. Gegauf explained that it is in this new application that the idea you are interested in is lying, and that it is precisely in said idea that it may be some European companies will be interested too. The solution on this point would be that the free licence Singer grants to Bernina includes the right for Bernina to grant a sub-licence to one European company belonging to a list of European companies to be defined).

c) Mr. Gegauf explained also that the sum of $.125.000 he asked for selling his applications (No. 358,377 and the new application to be filed shortly) is cheap and that he could not go substantially lower. He explained further that

if, instead of selling the application to Singer, he were to grant a licence for said inventions, he would get every year many times more than the single payment of $.125.000 he proposes. He added that, around him, everybody was against the proposal of $125.000 and advised him to ask for a much higher sum (we understood that those people around him were his family and some executives of his company). He even said that Mr. Willi told him this sum of $.125.000 was low. Mr. Willi apparently did not react.

Point a) above was the result of an objection from Mr. Gegauf Junior. He told his father during the interview that it may be that Singer is interested in buying the patent applications, not so much for acting against competitors than for avoiding to be involved in an infringement of Bernina's claims. Then Mr. Gegauf Senior put before us condition a).

After this preliminary discussion, Mr. Gegauf Senior asked us what sum we would offer, drawing our attention to the fact that he was not prepared to start bargaining and that he would not agree with a sum nearer to Singer's offer ($.40.000) than to his request ($.125.000).

We were somewhat embarrassed by such a declaration and by the affirmation of Mr. Gegauf according to which Mr. Willi was of the opinion that $.125.000 was not sufficient. In fact, as we wrote before, Mr. Willi told us on the telephone some time ago that it was very likely that Mr. Gegauf would reduce considerably his request for $.125.000, since he had put such a high amount in the discussion for counterbalancing Singer's offer of $.40.000, which he considered [fol. 3569] as a minimum. Thus, $.125.000 was the maximum and a halfway solution seemed to be normally expected.

On Friday last, we realized that the position of Mr. Gegauf has been considerably hardened in the meantime and that he was seriously considering $.40.000 as not worth for a discussion, and $.125.000 more or less as a minimum.

Owing to this change in the position, we felt it impossible to present as a firm offer a sum of $.60.000 or 70.000, since we were not authorized to do so. We were prepared to start a bargaining discussion and Mr. Gegauf Senior warned us he was not willing to start such a discussion. He asked for

a definitive offer (to be accepted or rejected but not discussed). We merely stated that due to such conditions, we saw no possibility to go further for the time being since our instructions from Singer contained a maximum and not a sum to be offered as an amount to be accepted or refused without discussion.

We added that such maximum was nearer to $.40.000 than to $.125.000 and that we would ask for your specific instructions concerning the sum to be offered. Mr. Gegauf looked surprised at our remark that the maximum sum you suggested us to accept as a basis of the agreement was nearer to $.40.000 than to $.125.000 but he did not say that any further interview on the basis of new instructions from you was superfluous.

In other words, it looks as if an agreement might be reached by offering a sum of $.80 to 90.000.

During the discussion, we pointed out that it was not right to compare what Bernina could get for a licence to what Singer would pay for being in a better position for acting against common competitors. We presented the view that what Singer was prepared to pay is to be considered as an insurance premium for bettering its legal position, and not as the equivalent of a licence.

To this remark, Mr. Gegauf replied that we were right but that by giving Singer the possibility to stop the Japanese competitors in the U.S.A., there is a serious drawback for Bernina, viz.: If Japanese competitors can no longer sell their machines in the U.S.A., they will try to sell them in Europe. We answered that if Bernina's patents in America permit Singer to stop the Japanese competitors, the corresponding European patents will permit to act exactly in the same way in Europe. But Mr. Willi and Mr. Gegauf Senior confessed that unfortunately, the position was not so good in Europe:

1) Applications have been filed in a few countries only;
2) the subject matter of the new application to be filed in the U.S.A. is not protected at all in Europe.

[fols. 3570-3576] If you like, we can write to Mr. Willi, making a proposal for say $.75.000 (the maximum authorized by you). If Bernina refuses, then we can explain that we are writing to you for new instructions, in the case you

are prepared to make a higher offer, and then we might offer $.85.000. In such a way, it would be easier to introduce the bargaining which Mr. Gegauf said he will not accept during the interview.

We would not be surprised if you would have to go up to $.100.000.—, due to the present attitude of Mr. Gegauf. The point which struck us most was the difference between what Mr. Willi told us on the telephone and what Mr. Gegauf said of Mr. Willi about the $.125.000. Either Mr. Gegauf attributed to Mr. Willi what the latter did not say, in order to reinforce his own argument, or Mr. Gegauf has in the meantime convinced Mr. Willi that $.125.000 was quite a reasonable sum in the present case.

In any case, it shows that the position of Mr. Gegauf is firm and that he will not make new substantial concessions.

We remain at your disposal and are enclosing herewith a duplicate of the present letter for Mr. Waterman.

Very truly yours, Deriaz, Kirker & Cie, G. E. Kirker.

enclosure: 1 duplicate.

[fol. 3577] In United States District Court

Government's Exhibit 58 (S-10)

Agreement

Agreement dated December 5, 1957, between The Singer Manufacturing Company, hereinafter called "Singer", a Corporation organized and existing under the laws of the State of New Jersey, United States of America, and Fritz Gegauf Aktiengesellschaft, Bernina Naehmaschinenfabrik in Steckborn, Switzerland, hereinafter called "Gegauf" a Corporation organized and existing under the laws of Switzerland, for them and their respective successors.

Whereas, Singer and Gegauf have agreed by agreement dated April 12, 1956, inter alia, that neither party will attack the other in any country of the world on the basis of certain patents and patent applications identified in such prior agreement.

Whereas, Singer and Gegauf agree that their prior

agreement of April 12, 1956 shall continue to the end of its normal term and that the present Agreement will modify the prior agreement of April 12, 1956 only to the extent necessary to carry out the spirit and intention of the present Agreement.

Whereas, Gegauf has as of the day and year written above assigned to Singer, its successors and assigns, for the territory of the United States of America, the entire right, title and interest in and to United States patent application Serial No. 358.377 filed May 29, 1953 and to the inventions disclosed therein and to an application [fol. 3578] divided out of said application Serial No. 358.377 and filed at an unknown date just prior the present agreement, or about to be filed, and in and to any and all United States patents which may be granted therefor and in and to any and all extensions, divisions or reissues of such patents, and Gegauf is desirous of acquiring therefor, in return for the territory of the United States of America, a non-exclusive, non-transferable and royalty-free license to sell sewing machines as disclosed in the said United States patent applications and made in their own factory in Switzerland.

Now, Therefore, in consideration of the premises the parties agree as follows:

(1) In consideration of Gegauf's sale to Singer of the entire right, title and interest in and to United States patent application Serial No. 358.377 and its above mentioned division, to the inventions disclosed therein, and in and to any and all United States patents which may be granted therefor including any and all extensions, divisions or reissues of such patents, Singer will pay to Gegauf the sum of ninety thousand dollars ($90,000) after execution of this agreement and at the latest on the first day of January 1958.

(2) Singer hereby grants unto Gegauf a nonexclusive and royalty-free license to sell in the United States of America sewing machines of the type disclosed in said United States patent applications and made in their own factory in Switzerland.

[fol. 3579] (3) Singer hereby agrees not to introduce, without the consent of Gegauf, legal proceedings on the

basis of the said patents against Pfaff in Germany or Vigorelli in Italy, but only as far as sewing machines manufactured in Pfaffs factory in Kaiserslautern (Germany) or in Vigorelli's factory in Italy are concerned.

(4) Singer hereby agrees not to manufacture and/or sell in the United States of America or elsewhere a construction which would be a slavish copy either of the present construction of the Bernina sewing machine, taken as a whole, which is shown attached to the prior Singer-Gegauf agreement of April 12, 1956, or of the feeler and multiple cam mechanism the said Bernina construction includes.

(5) Gegauf hereby agrees to assist Singer in acquiring United States patents based on patent applications to the extent that it will cause the necessary papers and drawings to be properly executed and to do any acts necessary to be done for the procurement of a valid patent or for the reissue, extension or division of any such patent without charge to Singer but at Singer's expense.

In Witness Whereof the parties have executed this Agreement in duplicate as of the day and year written above.

The Singer Manufacturing Company, By
Fritz Gegauf A.G. Bernina Naehmaschinenfabrik, By

Witness:

Witness:

[fol. 3580] IN UNITED STATES DISTRICT COURT

GOVERNMENT'S EXHIBIT 59

Assignment

This Assignment made the 5th day of December, 1957. Witnesseth That, Whereas, Fritz Gegauf Aktiengeselischaft, Bernina Näehmashinenfabrik of Steckborn, Switzerland, hereinafter called "Gegauf", a Corporation organized and existing under the laws of Switzerland, is the owner, by virtue of assignment from Fritz Gegauf, of an application for United States patent and the inventions claimed therein,

which application was filed in the United States Patent Office by said Fritz Gegauf on or about May 29, 1953 under Serial No. 358,377 and bearing as its title "Sewing Machine".

Whereas, The Singer Manufacturing Company hereinafter called "Singer", a Corporation organized and existing under the laws of the State of New Jersey, United States of America, is desirous of acquiring, for the territory of the United States of America, the entire right, title and interest in and to said inventions and the said patent application Serial No. 358,377 and in and to any and all United States patents which may be granted therefor.

Now, Therefore, be it known that for and in consideration of the sum of One Dollar ($1.00) and other good and valuable considerations, the receipt of which is hereby acknowledged, the said Gegauf, has sold, assigned, transferred and [fol. 3581] set over, and by these presents does sell, assign, transfer and set over unto Singer, its successors and assigns, for the territory of the United States of America, the entire right, title and interest in and to the above mentioned inventions and patent application, and in and to any and all United States patents which may hereafter be granted therefor, and in and to any and all extensions, divisions, or reissues of said patents, the same to be held and enjoyed by Singer for its own use and the use of its successors and assigns, to the full end of the terms for which said patents may be granted, as fully and entirely as the same would have been held and enjoyed by Gegauf has this assignment and sale not been made.

The Honorable Commissioner of Patents is requested to issue any United States patents relating to application Serial No. 358,377 in accordance with this instrument.

In Witness Whereof, Gegauf has caused this instrument to be signed by its president on the day and year first above written

signed Fritz Gegauf.

CONFEDERATION OF SWITZERLAND, CANTON AND CITY OF ZURICH,

Consulate General of the United States of America, ss:

Subscribed and sworn to before me this fifth day of December 1957.

signed Leonard A. Warren, Vice Consul of the United States of America at Zurich, Switzerland duly commissioned and qualified.

[Seal.]

Service No. 3/27.

Tariff Item No. 49.

Fee Paid: U.S. $2.50.

Local CY. equiv. Sw. Frs. 11.00.

December 5, 1957.

[fol. 3582] IN UNITED STATES DISTRICT COURT

GOVERNMENT'S EXHIBIT 60

December 6, 1957.

M. L. Waterman, Esq., Vice-President,
The Singer Manufacturing Company,
Singer Building, New York.

Dear Mr. Waterman:

Gegauf United States Patent Application Serial No. 358,377.

We anticipate receiving from Mr. Stanford this afternoon the assignment document which transfers title in the above noted United States Gegauf application from Gegauf to Singer.

As you know, it is imperative for us immediately to exercise control over this application thereby to insure that it will not issue as a patent before we have had an opportunity to place it in a condition which will meet our particular needs.

Consequently, we would like to visit the Patent Office on

Monday next for the purpose of personally recording the assignment document in the Patent Office files and at the same time establishing our control over the application by filing with the Patent Office a proper power of attorney. If you agree with this procedure we would be pleased if you would sign the enclosed Power of Attorney and return it to us for filing. You will note that the enclosed Power of [fols. 3583-3584] Attorney also functions to revoke the present power of attorney which is in Mr. Leon Strauss, Gegauf's U.S. attorney.

Yours very truly, The Singer Manufacturing Company, ——, ——, Patent Department.

Enclosure—.

Power of Attorney.

[fol. 3585] IN UNITED STATES DISTRICT COURT

GOVERNMENT'S EXHIBIT 62

The Singer Manufacturing Company
Patent Department
Elizabethport F, New Jersey

Received December 13, 1957, Answered—.

December 13, 1957.

D. P. Kircher, Esq., Vice-President,
The Singer Manufacturing Company,
Singer Building, New York.

Dear Mr. Kircher:

Enclosed is the original and 4 copies of a memorandum setting forth in narrative form the events that transpired during my recent trip to Switzerland.

If my memory serves me correctly, the facts are set forth in the order of occurrence. The object is to try and give the reader a clear understanding of when and how the offer made by Bernina came about.

Yours very truly, J. E. Stanford.

Enclosures—.

Memorandum and copies.

Copy of enclosure to Mr. A. K. Aurell, Mr. C. F. Bruder, Mr. D. G. Robbins, Mr. R. W. Stewart, Mr. M. L. Waterman.

[fol. 3586] Received December 13, 1957.
Answered—.

Memorandum of

J. G. Stanford's Recent Visit to Switzerland

As planned, I arrived in Geneva on Monday morning, December 2, and telephoned Mr. Kirker, our Swiss patent attorney, who said that he would be free after 2:30 p.m. to discuss the negotiations which he had been conducting with Mr. Fritz Gegauf, President of the Bernina Company.

At 2:30 I visited Mr. Kirker's office and questioned him minutely about everything that had occurred during his recent negotiations with Mr. Gegauf, also as to any side remarks that Mr. Gegauf may have made during the negotiations that Mr. Kirker had with him. After quite a lengthy discussion and a reexamination of our original agreement with the Bernina Company, it was concluded that the best way to handle this matter was to call Mr. Willie, the patent counsel for Bernina, at his office in Zurich and request that he contact Mr. Gegauf saying that I was in Switzerland and that Mr. Kirker and I were quite anxious to have a conference with Mr. Gegauf as soon as possible and suggest Wednesday as the day of the conference. Mr. Kirker called Mr. Willie, gave him this information and requested that he call back and let him know when it would be possible to see Mr. Gegauf on Wednesday. Mr. Kirker had an important meeting in Bern, Switzerland on Tuesday and could not [fol. 3587] change his plans.

On Tuesday word was received from Mr. Willie that Mr. Gegauf was ill and would not be able to see us in Zurich. However, he would agree to see us in Steckborn, which is a small town located some 50 miles from Zurich and the site of the Bernina factory. Although we privately doubted the illness of Mr. Gegauf, there was no alternative but to agree to the arrangements and consequently, Mr. Kirker and I decided to go to Zurich on Wednesday morning and then proceed from Zurich to Steckborn. Mr. Kirker met me at the Geneva railroad station the following morning and we boarded the train for Zurich. We discussed the

situation on the way to Zurich and made plans as to how the various problems would be attacked. Just before we reached Zurich we decided that it might be advantageous if we could induce Mr. Willie to be our luncheon guest and to travel to Steckborn with us. When we arrived in Zurich, we immediately 'phoned Mr. Willie and he, probably anticipating such a request, informed us that he had a client whom he wished to see on his way to Steckborn and that he was leaving his office immediately.

Mr. Kirker and I went from Zurich to Mr. Gegauf's lovely home located on the side of a very high hill overlooking Steckborn and Lake Constance.

Mr. Willie was at Mr. Gegauf's home when Mr. Kirker and I arrived. Although Mr. Gegauf looked quite hale and [fol. 3588] hearty, he explained that he did not wish to go to Zurich because he had been ill and he felt that the cold, inclement weather would be too much for him.

The negotiations were conducted in the living room of Mr. Gegauf's home and Mr. Gegauf suggested that we defer discussing patent matters until his son arrived. He then asked me if I had come directly from the United States and I replied that I had, the reason being that after receiving Mr. Kirker's last letter I had been somewhat alarmed and perplexed at some of the points contained in the letter and I felt that the only solution was to come directly to Switzerland and try to clear up any misunderstanding between Singer and Bernina.

Rather than approach Mr. Gegauf as a humble petitioner with hat in hand, I immediately seized upon a statement made to Mr. Kirker, at a previous conference, to the effect that the Japanese ornamental stitch machines would be sent into Europe if they were stopped from being sent into the United States because Bernina did not have broad patent protection in Europe. I intimated that this was a surprise to us for we expected Bernina to have patents in Italy, Germany and Switzerland which would fully protect Bernina and Singer, and that it was very difficult for us to appreciate that it was only in the United States that they [fol. 3589] expected to obtain any substantial patent protection. I continued to drive this point home and asked if

they knew of any publications, facts or machines of which we had no knowledge. I then asked them such questions as:

Why no action had been taken in Italy in reference to their Italian patent,

What set of circumstances caused them to abandon much of the protection that they should have been able to obtain in Switzerland and

Whether or not their patent application which had been published for opposition in Germany was being opposed by a third party.

I was informed that they knew of no additional reference publication or prior patents which would have any effect upon the patents; that their published application in Germany was being opposed; that they had a divisional application pending in Germany; that in Italy they had notified Caser, a manufacturer of sewing machines, that their ornamental stitch machine was an infringement of the Italian Gegauf patent and that Bernina had received a letter from Caser saying that Caser had stopped manufacturing and selling the infringing machine in Italy.

Finally, after considerable discussion of all these points, I said to Mr. Gegauf that I was somewhat astounded by the statement he made to Mr. Kirker to the effect that Gegauf [fol. 3590] could not assign the United States patent to Singer unless Singer agreed not to manufacture a machine which came within the terms of this United States patent or its division. I called attention to the fact that Singer would hardly be willing to pay an enormous sum for a patent application and at the same time surrender patent rights which we already had. The copy of the original agreement with Gegauf was then introduced into the conversation and we showed Mr. Willie and Mr. Gegauf the clauses which gave Singer the full right to manufacture and sell under enumerated United States and foreign patents. Mr. Gegauf then protested that these clauses applied only to the Gegauf United States application which was pending at that time and that we had no rights under his divisional application. His attention was called to the fact that the divisional application in the United States was not new, but that it was taken completely from the original Gegauf patent applica-

tion. As an analogy we suggested that if one had a piece of pie and divided it up into a number of pieces, it was still the same pie. Therefore, the divisional application which he was filing was nothing more than part of the original application and consequently, our agreement with him gave us full rights under any United States and foreign patents relating to such original application.

[fol. 3591] At this point in the discussion, Mr. Gegauf's son, accompanied by a member of the Board of Directors of Bernina, came into the living room and entered into the discussion. Young Mr. Gegauf became quite excited over the fact that Mr. Willie agreed with us that Singer did have full rights under both the original and divisional patent applications and then argued that the agreement was signed at the time an interference was pending between patent applications of Singer and Gegauf and thus, the agreement only related to the disputed claims of the interference and not to Gegauf's United States patent application as a whole. He said, further, that we had no rights under any foreign divisional applications that Gegauf had filed. Fortunately, at this point Mr. Willie entered into the discussion and finally convinced young Mr. Gegauf that he was in error and that Singer did have full rights.

Young Mr. Gegauf further argued that if the United States patent were assigned to Singer and if Singer were successful in stopping certain types of Japanese ornamental stitch machines from being shipped into the United States, it would merely divert such machines into Europe and as a consequence Bernina would have still more com-

[fol. 3592] petition in Europe, and as a result of the increase in competition in Europe Bernina would have a substantial loss of business. To this argument I took the position that the United States was really the first line of defense and that if the Japanese were permitted to flood the United States market with ornamental stitch machines of the Bernina or Class 401 type they would become so strong and production would be so great that they would enter the European market in a stronger position. I further stated that protection was to be obtained in some of the foreign countries by Gegauf and it seemed that a greater risk would be involved if they did not permit Singer to try

and reduce the importation of the multiple-cam machines into the United States.

Mr. Gegauf's daughter put in her appearance shortly before this time and she and her father finally persuaded her brother that possibly it would be better to give Singer an opportunity to try to cut down the importation of multiple-cam machines into the United States.

At this point Mr. Gegauf asked that there be put into any agreement that may be reached with Singer a provision that Singer would assist Gegauf-Bernina in all possible ways in the event that Gegauf should decide to take action under his patents against competitors in Europe. After considerable discussion, Mr. Gegauf was finally convinced [fol. 3593] that it would be unwise for the agreement to contain a provision of this kind.

The matter of licensing other European manufacturers was then taken up and after discussion, it was concluded that Singer would not bring any action under the assigned Gegauf United States patent application, against Vigorelli for machines sold in the United States and made by Vigorelli in Italy, or against Pfaff for machines sold in the United States and made at their factory at Kaiserlauten, without first obtaining the consent of Gegauf. In this way we avoided giving a license to a third party under the United States patents which we expect to obtain. It was also agreed that the Bernina Company was to receive a nontransferable, royalty-free license to sell their Swiss-made multiple-cam machines in the United States.

After all of these preliminary details were settled, the matter of price came up and Mr. Gegauf insisted that Singer make an offer. After considerable thought, I decided to offer 300,000 Swiss francs, which is the equivalent of about $75,000 but has a larger sound, for an assignment of the original and divisional United States patent applications. Mr. Gegauf then stated that this was not close enough to his original figure of $125,000. It seemed, however, that since he had requested another offer from Singer, [fol. 3594] he would be willing to reduce the original figure. Considerable discussion ensued and finally I was able to bring him down to an offer of 400,000 Swiss francs. This left approximately $25,000 between the figure offered by Singer and the figure which Gegauf was willing to accept.

Throughout the entire negotiations I had tried to drive home the point that the Brother Pacesetter machine was a free-arm zigzag machine and that Singer did not have a comparable free-arm machine to sell. Consequently, the Brother Japanese machine was in direct competition with Bernina and not with Singer. During the negotiations I continued to point out various ways that the competition in free-arm machines might be reduced as well as the competition in flat-bed machines and as a consequence Gegauf would be in a position to profit from this fact more than Singer.

Suddenly, Mr. Gegauf put forward the proposition that if Singer would agree to take 10,000 of his free-arm machines a year for the next five years and sell them in the Singer shops in the United States; that he would give the United States patent to us with no charge. I replied that I doubted Singer would be willing to sell someone else's machines in its shops and that Singer certainly would not consider it if it were not an exclusive. Mr. Gegauf's [fol. 3595] daughter, who speaks very good English, said they were thinking of changing their agents in the United States and they were sure they could make this an exclusive proposition. Gegauf interposed with a statement that he felt he could sell the machine to Singer more cheaply than Singer could make them. I presumed he was referring to making them in the United States. I told them that I felt Singer might be interested in their proposition, but that Singer would not sell the machine with the name "Bernina" on it and in the same color as the "Bernina" machines. However, I did not press this point any further but said that I would relay this information to the executives in New York and that I felt sure they would contact Mr. Gegauf and let him know their decision in this matter.

I then pointed out that I was there only to discuss patents and patent questions and that I preferred to go on with the patent negotiations, rather than enter into any commercial discussions.

I then asked Mr. Gegauf if Singer subsequently agreed to purchase 10,000 machines per year if he would refund to us the money paid for the patent. He agreed that if Singer and Gegauf-Bernina could reach a satisfactory marketing

agreement, then the purchase price of the United States patent applications would be returned to Singer.

[fol. 3596] Negotiations as to price continued and finally I made an offer of $90,000, which Mr. Gegauf accepted: It was decided that the agreement would be drawn up early the next morning and would be taken to Mr. Willie's office in Zurich and typed by his secretary. Mr. Gegauf said that he would be in Zurich the next morning at 11 o'clock to sign the agreement and execute, before the American Consul, the assignment paper of the original patent application.

Mr. Gegauf and his family then invited us to a chicken dinner at an inn on Lake Constance. I must say that the chicken was excellent and that the relationship of all the parties was equally as good. After dinner and before I departed for Zurich, I took occasion to say to Mr. Gegauf that in the event Singer wished to negotiate further with him in reference to the selling of Bernina-made machines in the United States, he should condition himself to the fact that Singer would not sell the machines under the name "Bernina". Mr. Gegauf did not say yes or no and, consequently, his mind apparently is not fixed and this is a point which can be the subject of negotiation.

Mr. Kirker and I then returned to Zurich and early the next morning drafted the proposed agreement after which I obtained a check from the Swiss Bank for the sum of $90,000. There was no difficulty whatsoever in obtaining this check with the aid of the letters of credit which [fol. 3597] Mr. Morton had provided. We met Mr. Gegauf in his office in Zurich, the agreement was signed, and Mr. Gegauf then went to the American Consul's office and executed the assignment of the United States patent application to Singer. After the signing of the agreement, Gegauf said to me that although the night before it had been intimated that Singer would be given an exclusive right to sell Bernina machines in the United States, on further reflection he felt that he would like to retain one or two of his present agents, particularly the one in Kansas City. I replied that I could not speak for the Company on any of these points but that I felt sure they would contact him at an early date.

He then took occasion to say that the Consolidated Sewing Machine Company of New York had been trying to get an exclusive franchise in the United States for the Bernina machine.

The following are some facts which may be interesting or of use at some future date:

Mr. Gegauf is 64 years old and a very pleasant, quiet man. He is more inclined to listen than to talk, and although he contends that he does not understand English very well it is my observation that he understands and is capable of using the English language to a much greater [fol. 3598] extent than he is willing to admit. He follows the old British rule of "use the mother tongue whenever possible".

The total production of Bernina machines is between 70 to 80 thousand per year. Only about 4500 straight stitching machines are made per year and Mr. Gegauf said that he would prefer not to make any, but that his distributors required a few straight stitching machines. He explained that the low production of straight stitching machines resulted in a very high cost and no profit. Mr. Gegauf stated that the major efforts of his production and sales departments were devoted to multiple-cam ornamental zig-zag machines and that he sold more of the free-arm machines than the flat-bed machines.

Mr. Gegauf's daughter informed me that Bernina had recently opened a very nice shop in Munich and that many wives of the American service men came into their shop [fol. 3599] to inquire about the Bernina ornamental zigzag stitch machine. She stated that this was brought about by an article in the "Consumer Reports" published in the United States. I am informed that Bernina has used large reproductions of this report in their shops in Europe.

Bernina does not wish to increase its production. Mr. Gegauf said that they are getting the maximum number of machines off their present tools and that he does not wish to expand any further. He expressed the opinion that small sewing machine companies get into difficulty by overexpansion and permitting their inventories to become too great.

Mr. Lightner requested that I determine, if possible,

whether or not the Bernina Company might be for sale. The presence of Mr. Gegauf's 12 year old grandson permitted me to inquire of Mr. Gegauf as to whether the boy was going to become a sewing machine man. Mr. Gegauf replied that he hoped so, that there was a younger generation in being and that he would like to retain the Bernina Company for them. He said that he had been approached by others [fol. 3600] to sell the Bernina Company but he preferred to retain the Company for his family. I concluded from Mr. Gegauf's statements that the Bernina Company is not for sale. By this I mean to imply only that it is not on the bargain counter. Aside from the idle inquiry, I made no further remarks concerning this matter.

I am sure that Mr. Gegauf is expecting to hear from Singer at an early date as to whether Singer is interested in selling the free arm Swiss-made machine in the United States.

Copies sent to Mr. A.K. Aurell, Mr. C.F. Bruder, Mr. D.G. Robbins, Mr. R.W. Stewart, MLW.

[fol. 3601] In United States District Court

Governments Exhibit 63

December 18, 1957.

Dear Mr. Gegauf:

Recalling the delightful chicken dinner that I had with you and the members of your family near Lake Constance and particularly the "Bernina Coupe" which you suggested that I have for dessert, I am writing this letter instead of dispatching to you the usual Christmas card.

I arrived home safely with the box of chocolate Bernina sewing machines intact and, so far, I have given only two of the chocolate machines to my wife. This is causing some domestic difficulties because she likes your Swiss chocolate candies very much and made the remark that: "If the Bernina sewing machine is as good as the candy, it must be an excellent machine."

The return trip to the United States was a bit rough as

far as the fog and the weather were concerned. However, there was a bright spot in the sky when we landed at Shannon Airport in Ireland and were permitted to purchase, tax free and at a ridiculously low price, five bottles of Kirschwasser, or the like. This was particularly helpful at this season of the year.

I have told the executives in New York of your proposition concerning the marketing of free-arm machines in the United States. You will probably be hearing from New York shortly after the holiday season.

[fol. 3602] It is a pleasure to do business with you and I am happy that our recent business dealings reached such an amicable conclusion. I hope the result will be profitable to both parties.

Please extend to the members of your family and to those members of your staff whom I have had the pleasures of meeting, the Seasons Greeting and my best wishes for joyous holidays.

Cordially yours, ——, ——.

[fol. 3603] IN UNITED STATES DISTRICT COURT

GOVERNMENT'S EXHIBIT 64

July 17, 1958.

M. L. Waterman, Esq., Vice President,
The Singer Manufacturing Company,
Singer Building, New York.

Dear Mr. Waterman:

Enclosed is a draft of a proposed letter to Mr. Gegauf. I have merely set forth the fact that we have brought suit under the patent and contemplate bringing other suits. The letter has been left incomplete because I thought perhaps you would like to add something of a personal nature.

Yours very truly, The Singer Manufacturing Company, ——, ——, Patent Department.

Enclosure—.

Copy of proposed letter.

[fol. 3604] Proposed Letter

F. Gegauf, Esq.,
Fritz Gegauf Aktiengesellschaft,
Bernina Nahmaschinenfabrik,
Steckborn, Switzerland.

Dear Mr. Gegauf:

Enclosed is a copy of patent No. 2,832,302 which issued as a result of your United States application No. 358,377. A division of this application is still pending in the United States Patent Office.

I thought you would like to know that we have started suit against Brother International Corporation for infringement of patent No. 2,832,302 and two other patents owned by Singer. We are contemplating, within the next few days, bringing suits for infringement of our United States patents against other sellers of Multiple Cam Zigzag machines in which one of the cams may be selected by the operator to control the design pattern.

[fol. 3605] In United States District Court

Government's Exhibit 65

Received Patent Department, July 22, 1958, Answered—.

M. L. Waterman
149 Broadway
New York 6, N. Y.

July 21, 1958.

F. Gegauf, Esq.
Fritz Gegauf Aktiengesellschaft
Bernina Nahmaschinenfabrik
Steckborn, Switzerland

Dear Mr. Gegauf:

Enclosed is a copy of Patent No. 2,832,302, which issued as a result of your United States Application No. 358,377. A division of this Application is still pending in the United States Patent Office..

I thought you would like to know that we have started suit against Brother International Corporation for infringement of Patent No. 2,832,302 and two other patents owned by Singer. We are contemplating, within the next few days, bringing suits for infringement of our United States patents against other sellers of Multiple Cam Zigzag Machines in which one of the cams may be selected by the operator to control the design pattern.

Very truly yours, M. L. Waterman.

Enclosure

cc: Mr. J. G. Stanford (not noted on original).

[fol. 3606] IN UNITED STATES DISTRICT COURT

GOVERNMENT'S EXHIBIT 66

8/4/58.

Referred to Mr. J. G. Stanford.

This is the letter about which I telephoned you this morning. Will await your comments concerning the question raised by Mr. Heimann.

M. L. Waterman

[fol. 3607] Fritz Gegauf

Received Patent Department, August 4, 1958, Answered —.

Steckborn/Schweiz
Inhaber Der

Bernina Nahmaschinenfabrik

July 25, 1958.

Mr. M. L. Waterman
149, Broadway
New York 6, N.Y.

Dear Mr. Waterman,

I thank you very much for your letter of 21st inst., enclosing a copy of the U.S.A. Patent No. 2,832,302, which was granted against our Application No. 358,377.

I note with very much interest that you have started suit against Brother International Corporation for infringement of said patent and some of Singer and that you will shortly suit some further companies for infringement of your U.S.A. Patents regarding the construction of multiple cams. I feel quite sure that you will be successful.

I seize this opportunity to advise you of the following matter. Many European sewing machine factories begin to be disquiet on account of the increasing sale of Japanese sewing machines.

From the American import statistics it is seen with anxiety that during 1958 the Japanese succeeded in increasing again the export of their machines compared with 1957, while the export of European machines to the U.S.A. is going back.

Even if in Europe the Japanese competition is presently not alarming, as regards quantity of machines, the manufacturers of sewing machines, especially in Germany, make efforts to stop the import of Japanese sewing machines.

Recently I have had the opportunity to discuss the matter of Japanese imports in Europe with several directors of the Pfaff Company and also with directors of other German sewing machine factories. I hardly believe that in Germany and in other countries measures will be taken

on the part of the state in order to prevent substantially the import of Japanese machines.

I told to these gentlemen that according to my opinion it will be very difficult to do anything against the Japanese, as long as the European sewing machine manufacturers undertake everything to open the doors to the Japanes, especially as regards the supplies of automatic zigzag sewing machines similar to proved European constructions. Several European, especially German manufacturers, try with all means to bring to fall the patent [fol. 3608] applications of my company. Above all I mean the Bernina Automatic. I hope to be able to induce those firms, which made interference against our application, to withdraw their interference under certain conditions.

During a discussion with Mr. Heimann of the Pfaff Company he asked me whether I believe that also the Singer Company would be prepared to help that a further gaining ground of the Japanese machines on the European market be prevented in respect of patent rights. As it seems people know already that a patent arrangement was reached between the Singer Company and the Bernina and that friendly connections are existing between our Companies, I was asked to submit you the aforesaid question. I did not mention, of course, that you intend to proceed against the Japanese on the basis of your patents and ours, what happened already in the meantime. According to my opinion, the Japanese can be hit only if we succeed in preventing their manufacture of proved and well accepted constructions for reasons of patent rights. You are on the right way with your suit.

I should be very glad to discuss this matter when you will come again to Europe and to know your opinion. Owing to the proved Bernina construction, my company is still fully occupied notwithstanding the general weakness of the market.

I remain, dear Mr. Waterman, with very kind regards,

Sincerely yours, F. Gegauf.

[fol. 3609] IN UNITED STATES DISTRICT COURT

GOVERNMENT'S EXHIBIT 67

January 28, 1958.

M. L. Waterman, Esq., Vice-President,
The Singer Manufacturing Company,
Singer Building, New York.

Dear Mr. Waterman:

We are enclosing a ribbon copy and two carbon copies of our report of the activities of this Department for the year 1957.

As requested, we have condensed the report and we trust that you will find it satisfactory in its present form.

Yours very truly, The Singer Manufacturing Company, ——, ——, Patent Department.

Enclosures—

Report (in triplicate).

[fol. 3610] Vice President's Department

Summary of Patent Department Report for The Year 1957

Probably the most important single accomplishment of the past year was the agreement reached with Messerschmitt A. G. of Germany. This agreement permitted Singer to continue to sell the Class 319 machine in all of the countries of the world without fear of being charged with patent infringement by Messerschmitt, released us of all possible charges which may have been made for past infringement of its patents, and made possible future marketing of the Class 320 machine. In addition, the Messerschmitt Company assigned to Singer its pending United States patent application relating to multiple cam machines and this application gives Singer a foothold in the United States in the field of multiple cam machines in which a stack of cams is used for controlling the lateral vibrations of the needle bar and a separate stack of cams is used to

control the feeding mechanism. In return Singer agreed that Messerschmitt could continue to sell its multiple cam machine (which is similar to our Class 319 machine) in the United States.

Steps were taken to strengthen Singer's patent position in the United States for multiple cam zigzag stitching machines by concluding an agreement with Fritz Gegauf A. G. of Switzerland, makers of the well-known Bernina sewing machine, whereby a basic United States patent application relating to such machines was assigned to Singer. Patents issuing on this application grouped with other Company patents should put Singer in a better position in any attempt to prevent others from importing into the United States multiple cam machines of the Singer Class 401 type. Previously we had secured rights under the corresponding foreign Gegauf patents which enable us to [fol. 3611] market our Class 401 machines in those countries without fear of being charged with infringement of the Gegauf patents.

[fol. 3612] The growth of the Japanese and European sewing machine industries continues to increase the patent activities of our competitors in these areas. All of these activities have been closely followed and, opposition proceedings have been brought against those competitors' patent applications which we feel might interfere with the manufacture or adoption of Singer sewing machines. In a number of instances, undertakings have been obtained from our competitors in which they agree not to enforce their patent rights against Singer.

[fol. 3613] IN UNITED STATES DISTRICT COURT

GOVERNMENT'S EXHIBIT 68

Hotel Metropole
Brussells

Thursday

Dear Chet:—

Some disconcerting news. Belgium Patent 543,073—filed by Willy Messerschmitt & Kurt Brandt (under Convention 25 Nov. 1954 & 13 July 1955 filed 24 Nov. 1955 in Belgium. We search the files of the Belgium patent office yesterday and came up with this. Drawing show multiple cams for controlling ZZ and another set on same shaft for controlling feed. Claims both. I guess that they filed in Germany on Nov. 25, 1954, for the multiple cam ZZ and filed a patent for addition July 13, 1955 for cam feed. At any rate they seem to be four days ahead of Johnson and 14 days ahead of Perla 319 m/c.—tough luck—at least we appear to be ahead in U.S. We see the Messerschmitt people (maybe Willy) in Frankfort next week. So far have been unable to find out what the 1st German patent application covers. Spain is the only country I know of that does not permit double priority dates.

With this knowledge what should we do in U.S.? Both France & Switzerland say they must have cylinder bed m/c to compete; does this make Messr.— a good buy?

[fol. 3614] Have arranged to get Belgium O G—information sent to us was wrong. Went through Gazette for last 18 months, only 5 sewing m/c patents, two were Singers. Just happened that Messerschmitt filed here.

Leave for Germany in a few minutes. Belgium full of Japanese machines, all kinds. Regards to all. JGS

[fol. 3615] IN UNITED STATES DISTRICT COURT

GOVERNMENT'S EXHIBIT 69

The Singer Manufacturing Company
Patent Department
Elizabethport, F, New Jersey

January 19, 1956.

Air Mail

Leo Adamson, Esq.,
Frankfurt.

Dear Mr. Adamson:

Multiple-Cam Ornamental Stitch Sewing Machine.

Thank you for your letter of January 11 on this subject.

We have noted that Dr. Wiegand reports the "legal situation is extraordinarily complicated" and that it may be more complicated than can be judged at the moment.

We are all well aware of how serious and complicated the patent situation is in Germany and most of the important industrial countries of the world. In Germany we have an opportunity to oppose the claims of applications before the application is finally issued. This is an advantage that we do not have in many countries.

We are making every effort to stay on top of this situation and if Dr. Wiegand has any suggestions as to how we can better protect ourselves or improve our position we would be happy to receive them.

Yours very truly, The Singer Manufacturing Company, J. G. Stanford, Patent Department.

[fol. 3616] IN UNITED STATES DISTRICT COURT

GOVERNMENT'S EXHIBIT 70

March 15, 1956.

L. Adamson, Esq.,
Singer Nähmaschinen Akt.-Ges.,
Gutleutstrasse, 42,
16 Frankfurt a/Main 1,
Germany.

Dear Mr. Adamson:

As you know it is most important for us to have the earliest information possible concerning [the filing date] of the patent application of Messerschmitt for their multiple-cam machine. We have searched the United States assignment records, the British patent applications filed, the Italian patent records and have kept a sharp lookout over possible issue or publication in all foreign countries. To date, we have found nothing that has been of help to us.

It may be that some information can be picked up from the Patent Office in Belgium. We would appreciate it if you would contact Dr. Wiegand and ask him to please obtain any and all information possible concerning the possible filing by Messerschmitt of patent applications directed to sewing machines having multiple cams, any one of which may be selected to control the vibration of the needle-bar.

This has been made more important by a recent communication from the German Patent Examiner, in which he stated that action on our Perla application S 46,580 (319 machine) is being held in abeyance because of a prior [fol. 3617] filed German application which he has before him.

Yours very truly, The Singer Manufacturing Company, ——, ——, Patent Department.

CC: Mr. M. L. Waterman.

[fol. 3618] IN UNITED STATES DISTRICT COURT

GOVERNMENT'S EXHIBIT 71

Karlsruhe

Friday Morning.

Dear Chet:—

I have given much thought to the Messerschmitt situation. It seems to me that we should push the U.S. Perla case to the limit. If you agree "let er go."

As far as I can see Messerschmitt's filing date in Germany is Nov. 25, 1954. I feel quite sure of this, so we can establish our superiority in the U.S. While M/S said they were willing to be friendly & negotiate, it is my impression that they will do so only when they have a gun in their back. Anyway, I'm not so sure we need them or that we will wish to negotiate, maybe we can push them out of the sewing machine game. They admit they have no time to give to it, but want to hang on. Apparently Bell has quite a contract with them.

In view of the prior Art to Messerschmitt app

Bernina—(especially italian)
Harris
Vigorelli & publication in U.S.
Brustch
etc.

just what can Messerschmitt get in the way of patent protection which will stop Singer.—Their attorney knows [fols. 3619-3621] nothing about sewing machines or sewing machine patents so he may not do so well. Does the Belgium patent cover 319—my impression was no—but didn't have time to study the case. Italian patent speck & claims should be in P.D. before I get there. Will check British in Glasgow on Monday—& will write Bendel in Paris to check sub-rosa in France for Messerschmitt application. Messr— may have filed in only a very few countries.

Had letter from Gegauf yesterday but he didn't say anything about assigning his U.S. application to us.

Noticed from a memo—that L. L. Pettit sent Waterman that Schmitt gave up on needle-looper——

Frankfort tonight—London Sunday—Glasgow—Monday—London Tuesday—Southampton Wednesday and then home. It's been a nice trip and quite fruitful.

Regards to all, JGS.

P.S. Mr. Lightner will be in London—Mr. Waterman leaves tomorrow morning for London to talk with Mr. Lightner—understand we may all be in Clydebank together.

JGS

[fol. 3622] IN UNITED STATES DISTRICT COURT

GOVERNMENT'S EXHIBIT 72

April 30, 1956, Patent Department Correspondence Dept.

Cablegram

Please send the following cablegram:

J. G. Stanford
Gersinger-Frankfurtmain
Germany

Messerschmitt might be stopped in Germany and other countries by proper claims in applications corresponding to Vigorelli Italian patent 507862 filed September 29, 1953. This patent is first to show and claim two cams tracked by follower means during single stitching cycle.

Patent Department, The Singer Manufacturing Company, ——, ——, Patent Department.

[fol. 3623] IN UNITED STATES DISTRICT COURT

GOVERNMENT'S EXHIBIT 73

April 30, 1956, Patent Department, Correspondence Dept.

Cablegram

Please send the following cablegram:

J. G. Stanford
Gersinger-Frankfurtmain
Germany

Purchase of Messerschmitt for patent reasons only not justified if German applications of Gegauf and Vigorelli contain claims dominating Messerschmitt.

Figures nine and seventeen of Gegauf Italian patent 501,172 and all figures of Italian Vigorelli patent 507,862 would support different coexisting claims dominating Messerschmitt.

Patent Department, The Singer Manufacturing Company, ——, ——, Patent Department.

[fol. 3624] IN UNITED STATES DISTRICT COURT

GOVERNMENT'S EXHIBIT 74

Received Patent Department, May 28, 1956, Answered—.

May 25th, 1956.

L. Adamson
Frankfurt Am Main
Sutleutstrasse 42-44
Singer-Maus

M. L. Waterman, Esq.
Vice President
Singer Building
149 Broadway,
New York 6, N. Y.

Dear Mr. Waterman,

Multiple-Cam Ornamental Stitch Sewing Machine—
Messerschmitt

We had today a visit of Mr. Busselmeier, the patent agent of the Messerschmitt A.G. of Augsburg and the chief designer of that company, Mr. Brandt, who had come to inspect the Cl. 319 Machine you have sent us for this purpose.

After only a short inspection both gentlemen said that the design of the automatic unit of this machine is the same in principle as theirs. The rocker carrying the levers and the location of the levers on the rocker are identical. The locking of the levers is considered to be the same too. There is an immaterial difference in so far as the rocker is journalled on the left with the Singer machine whereas it is journalled on the right with the Messerschmitt design.

The design of the Messerschmitt automatic unit is protected by a German patent application which is several years old but has not been published yet. It is alleged that the main claim of it covers the Singer design.

Asked for the date or year of the application Mr. Busselmeier said this would have to be left for the further negotiations as Mr. Stanford had not given yet the dates of

the pending Singer patent applications which he had said to cover the Messerschmitt design.

As a result of today's inspection of the Cl. 319 Machine Mr. Busselmeier believes it necessary that Mr. Stanford and he meet again as soon as possible and that both put those patent applications on the table which they believe to be infringed by the other party's design.

Mr. Busselmeier thinks that an amicable settlement will be in the interest both of the Singer and the Messerschmitt companies because quite a number of other competitors would profit by a dispute which would partly destroy or narrow the claims of either the Singer or Messerschmitt patents. He has mentioned, however, that he cannot say anything definite to this effect at the moment because he will have to report to the Messerschmitt Company first and because Mr. Messerschmitt himself generally attends to such technical matters. Mr. Busselmeiser hopes, however, [fol. 3625] to be able to let us have news in writing in the course of next week.

As regards a new meeting with Mr. Stanford Mr. Busselmeier said that he would be prepared to go to the States for such conference but that he could on the other hand not expect the Messerschmitt A.G. to pay his expenses seeing that it is a question of infringement of a Messerschmitt patent.

I shall write you again as soon as we receive a communication from the Messerschmitt A.G. or Mr. Busselmeier, but I want to let you have this preliminary report so you are posted on the results of the inspection of the Cl. 319 Machine.

Yours very truly, [Copy Illegible].

Copy to Mr. J. G. Stanford, E'port.

P.S. Please let me know, whether you wish the Cl. 319 Machine to be returned to New York.

[fols. 3626-3628] IN UNITED STATES DISTRICT COURT

GOVERNMENT'S EXHIBIT 75

Received Patent Department, June 18, 1956, Answered—.

Compagnia Singer per Macchine da Cucire
Società Italiana per Azioni
Sede Milano-Stabilimenti Monza
Capitale Sociale Lit. 1.800.000.000

Milano 12th June, 1956.

SL.og (II')
J. G. Stanford Esq.,
Patent Department,
Elizabethport F, N. J.

Dear Sir,

In accordance with your request, we have contacted our Patent Advisers and have carefully discussed with them the various points contained in your letter of May 22nd. The conclusions have been summarized in the attached report drawn up by Ing. Faraggiana.

We have little to add to this report. A possibility of Messerschmitt to start a legal case in Italy in defence of his patent exists and we hope that the report will help you to decide whether or not it would be advisable to include Messerschmitt amongst the signers of the non-aggression pact.

According to our Advisers, a legal judgement is likely to prove more favourable to us; on the other hand, they believe that in the event of our losing the case, consequences would certainly be much heavier for us than for the other party.

Needless to say that we are at your disposal for any further development of the matter.

Yours very truly, Compagnia Singer, per
Macchine da Cucire, ——.

Encl.

cc: Mr. M. L. Waterman, N. Y.

[fol. 3629] IN UNITED STATES DISTRICT COURT

GOVERNMENT'S EXHIBIT 77

July 16, 1956.

L. Adamson, Esq.,
Singer Nahmaschinen Akt.-Ges.,
Gutleutstrasse, 42,
16 Frankfurt a/Main 1,
Germany.

Dear Mr. Adamson:

Multiple-Cam Ornamental Stitch Sewing Machine—Messerschmitt A.G.

Thank you for your letter of July 5th on this subject.

We now have good reason to believe that Messerschmitt has received, or will within the next several weeks receive, word from its United States attorney that its United States patent application relating to its automatic multiple-cam zigzag sewing machine interferes with an application owned by an unnamed adversary. Messerschmitt no doubt will realize its opponent is Singer. We further believe that Messerschmitt will be given 30 days to indicate to the United States Patent Office whether it wishes to enter or withdraw from such an interference. We presume that it will enter the interference. When such an interference is formally declared by the United States Patent Office, each party will be advised as to the identity of the other.

In view of this situation, I think it would be well if you would answer Mr. Busselmeier's letter which you quoted in your letter of June 15, 1956. Mr. Busselmeier should not [fol. 3630] be advised of the pending interference, for as a matter of tactics, I believe that it would be advantageous to have him advise you relative to this subject.

I would suggest that you advise Mr. Busselmeier that I can see no reason why an amicable settlement of this entire matter cannot be reached. Further, that you have learned that I expect to be in Europe again sometime in the latter part of August and the Messerschmitt-Singer situation can be discussed at that time. Although we do not wish to display to Mr. Busselmeier a sense of urgency or eager-

ness, we would recommend that he be asked to suggest a definite date and place for a meeting with me if he is interested. Upon learning of the present conflict in the United States Patent Office we hope that Mr. Busselmeier will be stimulated into making further inquiries of you as to our intentions.

Yours very truly, ——, ——, Patent Department.

CC: Mr. M. L. Waterman.

[fol. 3631] IN UNITED STATES DISTRICT COURT

GOVERNMENT'S EXHIBIT 78

November 2, 1956.

M. C. Lightner, Esq.
Tokyo, Japan.

Dear Mr. Lightner:

Mr. Stanford and I had been waiting anxiously to hear from the attorneys for the Messerschmitt Company, and in fact on Monday of this week we discussed what our next action should be if we did not hear very soon. However, the day following, Mr. Stanford received a call from the Washington attorneys of Messerschmitt advising that they would like to talk with us, and on Thursday a representative came to New York and went over the situation with us. We learned that they had already advised Bell that it was in its interest that Messerschmitt should sign the patent agreement with us and that, as a result, Bell had sent a letter to Messerschmitt indicating its approval of this action.

The Washington attorney was in agreement entirely with the proposed draft of agreement between the two companies which we had left with Messerschmitt when in Munich and, in view of all this, I sent you a cable last night which read as follows:

"Messerschmitt's Washington patent representative today agreed completely to our proposed agreement affecting 319 and convinced Bell of benefit to it of

advising Messerschmitt to sign the agreement following which a letter went from Bell to Messerschmitt signifying approval stop A director of Messerschmitt will be coming to States in about a month when we anticipate agreement will be signed stop Believe question of purchase of their sewing machine business will also be raised although not mentioned today."

I think the cable is self-explanatory. As concerns the last two sentences, we will examine the Messerschmitt cylinder arm machine more carefully now. I believe there is not much we would have to do to it to make a pretty good sewing machine out of it, if we cared to do so. However, we will study that aspect of the problem and be prepared for the visit of the Messerschmitt director, who by the way is a stepson of Mr. Messerschmitt himself. We hope that this will settle all of our patent problems as concerns all of our [fols. 3632-3644] zigzag machines where there appeared to be some danger. I think we are really very fortunate.

• • • • • • •

Very sincerely, ——, ——.

Enclosures

[fol. 3645] In United States District Court

Government's Exhibit 84

Received December 12, 1956, Answered —.

Mr. D. P. Kircher

December 11, 1956.

M. L. Waterman, Esq., Vice-President,
The Singer Manufacturing Company,
Singer Building, New York.

Dear Mr. Waterman:

Singer Class 319 and Class 401 Multiple-Cam Ornamental Stitch Sewing Machines.

This is to bring up to date the infringement status throughout the principal countries of the world of the Singer Class 319 and Class 401 machines.

Class 401 Machine

The Class 401 machine could infringe the claims contained in certain patents and patent applications filed in the principal countries of the world, including the United States, by the Italian firm of Vigorelli and the Swiss firm of Gegauf-Bernina. However, the recent Singer-Vigorelli and Singer-Bernina patent agreements make it possible for Singer freely to manufacture and market the Class 401 machine under the Vigorelli and Bernina patents. With the possible exception of certain Brother Japanese, Brutsch and Husqvarna Swedish patent applications we know of no other adversely owned unexpired patents or patent applications which would be validly infringed by the Class 401 machine.

[fol. 3646] Class 319 Machine

The Class 319 machine, like the Class 401 machine, could infringe claims contained in certain patents and patent applications filed in the principal countries of the world by Vigorelli and Bernina. As in the case of the Class 401 machine, the Singer-Vigorelli and Singer-Bernina patent agreements permit us freely to operate under the Vigorelli and Bernina patents and patent applications.

However, the Class 319 machine infringes the recently issued Belgian and Italian patents owned by the German firm of Messerschmitt. We know that Messerschmitt has filed corresponding patent applications in Germany, Great Britain and the United States and thus we presume that within the near future there will issue to Messerschmitt German and British patents which could be infringed by our Class 319 machine. In the United States the corresponding Messerschmitt patent application is now locked in interference with the Singer patent application which relates to the Class 319 machine and we expect to prevail in this interference to the end that Singer will be awarded patent claims which will cover our Class 319 machine and which will be infringed in the United States by the comparable Messerschmitt machine.

[fol. 3647] Other than those owned by Bernina, Vigorelli and Messerschmitt, we know of no additional adversely

owned patents or patent applications which would be infringed by the Class 319 machine.

The question is now before us as to what is the best course of action to take in connection with Messerschmitt so that Singer can freely manufacture and market the Class 319 machine in Germany, Belgium, Italy and Great Britain where Messerschmitt either has or presumably will acquire patents which can be infringed by the Class 319 machine.

During our recent European conferences with Messerschmitt their representative Mr. Stromeyer indicated that Messerschmitt would be willing to grant Singer a license under their multiple-cam machine patents in exchange for a similar license under the Class 319 machine patents. However, to date Messerschmitt has not seen fit to execute such an agreement for the apparent reason that they wish to have the signing of such an agreement contingent upon Singer's agreeing to give them some type of sewing machine business.

It naturally would be to Singer's advantage to have a Singer-Messerschmitt patent agreement executed as soon as possible in view of the present or potential infringement [fol. 3648] status of the Class 319 machine in Italy and Great Britain.

Apparently, Messerschmitt is still exporting its machines to the United States where they are sold under the name Bell-Messerschmitt by the Bell Portable Sewing Machine Corporation. In the United States the Messerschmitt machine presently infringes a Singer-owned United States patent relating to the manner in which Messerschmitt mounts its sewing machine motor. Messerschmitt and Bell have been advised of this situation. In addition Bell and Messerschmitt undoubtedly realize that they will lose the United States patent interference with Singer with the result that they could in the near future be confronted in the United States with a patent infringement suit based on several Singer-owned patents.

The above factors constitute all of the necessary ingredients for a patent poker game with each party holding a good hand. However, it is our considered opinion that rather than risk losing its present market in the United States and at the same time being faced with the possible necessity of having to bring suit in both Great Britain and

Italy in order to enforce its patents against Singer, Messerschmitt may eventually be willing to exchange free patent licenses with Singer, which licenses will not be encumbered by any "business" promises. Accordingly, we recommend [fol. 3649] that for the present no further overtures be made to Messerschmitt lest they interpret such action on our part as eagerness resulting from a weak position. If Mr. Herzfeld of Toulmin & Toulmin can be relied upon, and we think he can, we would expect to hear further from Mr. Stromeyer as a result of Mr. Herzfeld's promise to us that he would advise Messerschmitt to execute our original proposed license agreement.

We would be pleased if you would instruct us as to the course of action we should take in this matter.

Yours very truly, The Singer Manufacturing Company, J. G. Stanford, Patent Department.

In triplicate.

CC: Mr. D. P. Kircher

[fol. 3650] In United States District Court

Government's Exhibit 85

January 3, 1957.

Messrs. Cruikshank & Fairweather,
Glasgow, Scotland.

Gentlemen:

Messerschmitt Ornamental Stitch Sewing Machine having a Plurality of Cams and a Plurality of Cam Followers for Controlling the Lateral Needle Vibrations.

* * * * * * *

This will advise you that as yet Messerschmitt has not seen fit to execute with Singer an agreement under which each party would be free to manufacture and market in all countries of the world its ornamental stitch zigzag machine.

* * * * * * * *

[fol. 3651] Yours very truly, The Singer Manufacturing Company, ——, ——, Patent Department.

CC: Mr. M. L. Waterman.

[fol. 3652] IN UNITED STATES DISTRICT COURT

GOVERNMENT'S EXHIBIT 86 (S-4)

Agreement

Agreement dated as of April Sixteenth, Nineteenhundred Fiftyseven, between the Singer Manufacturing Company (hereinafter called "Singer"), a corporation organized and existing under the laws of the State of New Jersey, United States of America, and Messerschmitt, A.G., (hereinafter called "Messerschmitt), a corporation organized and existing under the laws of the Federal Republic of Germany, for them and their respective assignees and successors.

1. Singer will not bring any infringement action against Messerschmitt under the rights derived from patents now issued or to be issued in any country with respect to subject matter disclosed in the annexed drawings K1. 52 KE of 14.I.55, K1. 53 KE of 1o.XII.54 and K1. 54 KE of 6.VI.55, and when embodied in sewing machines manufactured and sold by Messerschmitt.

2. Messerschmitt will not bring any infringement action against Singer under the rights derived from patents now issued or to be issued in any country with respect to subject matter disclosed in Singer's German patent applications No. S 46 453 VII/52a as filed on 23rd November, 1955, and shown in the annexed drawing (Figures 1-62) and No. S 46 580 VII/52a as filed on 2nd December, 1955, and shown in the annexed drawings (Figures 1-13) and when embodied in sewing machines manufactured and sold by Singer.

3. Singer and Messerschmitt each agrees not to institute in any country any opposition, nullity or invalidation proceedings against or otherwise to attack in any country the other's patents or patent applications corresponding to Messerschmitt's constructions as illustrated in the drawings indicated in paragraph 1 and to Singer's German applications indicated in paragraph 2, and to immediately withdraw any such proceeding if it has already been instituted provided, however, that if such patents and patent applications are or have become involved in a patent office

priority-determining proceedings such as a United States interference or a Canadian conflict proceeding, then both parties will work together in order to settle such proceeding in accordance with the laws and regulations of the patent office concerned and in the spirit of this agreement.

[fol. 3653] 4. Singer and Messerschmitt each hereby releases the other from any and all claims for infringement of patents in respect of subject matter coming under the terms of this agreement and manufactured and/or sold in any country prior to the date of this agreement.

5. Singer, as designated in this agreement, shall be understood as including the Singer Manufacturing Company, Singer Sewing Machine Company, their present and future subsidiary, affiliated, and associated companies, licensees, and customers (as far as the use of the sewing machines is concerned) throughout the world. Messerschmitt, as designated in this agreement, shall be understood as including Messerschmitt A.G., its present and future subsidiary, affiliated, and associated companies, licensees, and customers (as far as the use of the sewing machines is concerned) throughout the world.

In Witness Whereof, the parties have executed this agreement as of the day and year written above, in Frankfurt am Main (Germany).

The Singer Manufacturing Company, by M. L. Waterman, Vice President.

Witness: ——.

Messerschmitt A.G., by ——, Directors, ——, Procurist.

Witness: ——.

[fol. 3654] IN UNITED STATES DISTRICT COURT

GOVERNMENT'S EXHIBIT 87

April 18, 1957.

From: Mr. M. L. Waterman, Munich
To: Mr. M. C. Lightner, New York

Dear Milton:

I was very glad to be able to cable you last evening of the signing of the agreement with Messerschmitt. I was somewhat afraid that change in the management and directorship, because that is just what has happened, might mean a new attitude toward our problems, or at least having to start all over again, with new people.

We started our conversations in Frankfurt and completed the formality of signing here in Munich. Fortunately, the same patent attorney for M. was in attendance, and fortunately also, the representative of their Washington attorneys who was present last September, was not in attendance. I always felt the latter wanted to keep the matter going as long as possible.

The M. Co. is badly off financially. We gathered throughout the talks the impression they were anxious not to incur any more expenses in our interferences, present and future.

We gave them, in the course of our bargaining, the right to the Way United States patent in the machines they are now making. The patent is only taken out in the U.S.—no foreign countries. We have never used it ourselves. It is already about 12 years old Mr. Stanford believes. The fact we were doing this was never mentioned during our talks. The agreement states they will take no action against any of our machines which have in them the features of the [fol. 3655] 319 Perla patent application anywhere in the world (also of the 401 Johnson patent application likewise although we do not believe this latter machine is in any conflict with their patents or patent applications) and that we will take no action against their presently designed machines—referred to very completely in the agreement by drawing numbers and the drawings initialled and made a part of the agreement, just as the Perla and Johnson

patent drawings were likewise initialled and made also a part of the agreement.

I stated no mention was made of the Way patent, but Stanford and I were very much aware of it. Nevertheless we felt it was important, extremely so, to clear the 319. We will probably make 100 or even more to their 1, and what we were afraid of was they would suggest a licensing arrangement, we to pay for machines infringing them, and they for machines that would be infringements against our patents.

We would then have been in a very uncomfortable position, as there is no question but that they will antedate us, when the patents are issued, everywhere except in the United States.

The subject of M. turning over all their patents and applications to us, and we licensing them, is quite involved and I will not go into it in this letter. Stanford will start his people studying the pros and cons at once. I refer of course to only the patents and applications involved in the present situation. The next four days are holidays in the most of Europe. We are going down near Salsburg, not far from here.

Very sincerely, Max.

[fol. 3656] In United States District Court

Government's Exhibit 88

Received Patent Department, April 19, 1957, Answered—.

LIGHTNER SINGER MUENCHEVL83 FST 50 17 815P
AGREEMENT SIGNED 319 COMPLETELY FREE SAME IDEA AS WITH VIGORELLI AND GEGAUF STOP THEY WILL ALSO ASSIGN UNITED STATES PATENT RIGHTS AND PROBABLY IF WE WISH ALL PERTINENT FOREIGN PATENTS AND APPLICATIONS WE TO LICENSE THEM THUS GIVING US OPPORTUNITY OF PROSECUTING AGAINST OTHERS STOP WE WILL STUDY FOREIGN PATENT SITUATION SINCE THEY WILL BRING MAINTENANCE COST BUT IF OF ANY VALUE TO RESTRICT JAPANESE ESPECIALLY BROTHER WILL BE VERY MUCH WORTH WHILE STOP MILAN TUESDAY ZUERICH FOLLOWING SUNDAY

WATERMAN.

cc: Mr. M. Breen, Patent Department, Mr. H. J. Goosman, Mr. R. W. Stewart, Mr. D. P. Kircher, Mr. R. M. Miller.

[fol. 3657] IN UNITED STATES DISTRICT COURT

GOVERNMENT'S EXHIBIT 89

Air Mail

April 25, 1957.

Dr. E. Wiegand,
Ballindamm 26,
Hamburg 1, Germany.

Dear Dr. Wiegand:

Singer-Messerschmitt Patent Agreement

Our Mr. Joel G. Stanford has sent us a copy of the Singer-Messerschmitt agreement executed in Germany on or about April 16. We, of course, were most pleased to learn that this matter has been so successfully terminated.

Mr. Stanford advised us that aside from the above noted executed agreement Messerschmitt has verbally agreed to assign to Singer all of its rights in and to their United States patent application Serial No. 548,481 which relates to the Messerschmitt machine forming a part of the subject matter of the above executed agreement. In return for this assignment it is our understanding that Singer would continue at its own expense the prosecution of this application before the United States Patent Office for the purpose of acquiring, if possible, a good and valid patent. Also, Singer would at the time of the assignment extend to Messerschmitt a royalty-free license to manufacture and sell in the United States sewing machines of the type disclosed in the application.

[fol. 3658] Mr. Stanford requested us to prepare appropriate documents to implement the above outlined verbal agreement and thus we are enclosing three documents which we trust will adequately cover the situation.

Document (1) comprises an assignment from Willy Messerschmitt and Kurt Brandt to Messerschmitt A.G. of all rights in the subject United States patent application Serial No. 548,481. In the event that Willy Messerschmitt and Kurt Brandt have already assigned their application to Messerschmitt A.G. and such assignment has been recorded in the United States Patent Office then document (1) would be superfluous and could be disregarded.

Document (2) comprises an assignment from Messerschmitt A.G. to Singer of all rights in the subject application Serial No. 548,481, which document, like document (1), has been prepared primarily for recording in the United States Patent Office.

Document (3) comprises an agreement between Messerschmitt and Singer spelling out all of the terms involved in the present assignment. This agreement would not, of course, be recorded in the United States Patent Office.

Since our Vice-President Mr. Max. L. Waterman is now out of the United States, we were unable to have him exe- [fols. 3659-3665] cute document (3) in advance. However, in the event that Messerschmitt approves of and executes document (3) it could then be returned to us and presumably by that time Mr. Waterman will be back in the States and available for executing such document on the part of Singer.

If you find these documents to be in order we would be pleased if you would take this matter up with Messerschmitt A.G. so that this matter can be disposed of at an early date. In the event that Messerschmitt approves of and executes these documents we believe that it would be well to have them executed before a proper German official so that they may thereafter be legalized at the American Consulate before being returned to us.

We thank you in advance for any assistance which you may extend to us in connection with the above.

Yours very truly, The Singer Manufacturing Company, J. G. Stanford, Patent Department.

Enclosures—

Documents (3) (4 copies each)

CC: Mr. M. L. Waterman (3), Mr. J. G. Stanford (3).

[fol. 3666] IN UNITED STATES DISTRICT COURT

GOVERNMENT'S EXHIBIT 93

Received Patent Department, May 24, 1957,
Answered May 24, 1957.

May 20th, 1957

L. Adamson
Frankfurt Am Main
Gutleutstrasse 42-44
Singer-Haus

J. G. Stanford, Esq.
The Singer Manufacturing Company
Patent Department
Elizabethport F., N.J.

Dear Mr. Stanford,

Messerschmitt A.G.

When the two copies of the Agreement signed with the Messerschmitt A.G. on April 16th, 1957, sent me from Paris on May 7th came to hand, we had written a letter to Dr. Wiegand enclosing one of the copies and advising him of the various telephone conversations we had with Mr. Waterman, your goodself, and Mr. Busselmeier on the 7th and 8th inst.

In that letter we informed Dr. Wiegand of the wishes expressed by Mr. Busselmeier and his suggestion to meet Dr. Wiegand at either Frankfurt or München. We told Dr. Wiegand inter alia that you did in no case wish to give Messerschmitt the possibility of giving a license to anybody and that this should be limited as much as possible, and we also sent Dr. Wiegand copies of the correspondence and telegrams in order to post him fully. We asked him to study the matter, and then let us know when a meeting with him and Mr. Busselmeier could take place so that our Mr. Krüger could, if desired, go to Munich if that town should be preferred to Frankfurt.

When we had written our informatory letter to Dr. Wiegand at Hamburg but had not posted it yet, we had a telephone call from him at Munich, telling us that he had had a talk there with Mr. Busselmeier from which he deduced

he might be able to continue the negotiations while at Munich and come to an understanding corresponding to your wishes. He asked us to send him all data to Munich as he had not his files there. We accordingly posted our letter to Munich enclosing copies of the drafts (1), (2), (3) and (3A) as handed you with my letter of May 4th sent to Paris. We asked for further news.

These we have received only in the shape of the following papers.

Letter of Dr. Wiegand to Patent Department of May 14th Aktennotiz/Memorandum of May 10th on conversation of Dr. Wiegand with Mr. Fuchshuber and Mr. Busselmeier at Munich.
Altered draft for license agreement Singer/Messerschmitt to replace agreement draft (3).

[fol. 3667] In sending us these papers, Dr. Wiegand has expressed the opinion that he has come to an agreement with the Messerschmitt people which will be acceptable to the Company.

In his letter to you of May 14th, Dr. Wiegand has underlined that Messerschmitt is willing to accept a "nonexclusive, *nontransferable* and royalty-free license" under US patent application No. 548 481, but we wonder whether this "nontransferable" will be of any practical value, seeing that in paragraphs 2 and 3 of the draft for new document (3) reference is made to the passages in the Agreement of April 16th, 1957 "that Singer will not enforce any rights from any patents against Messerschmitt, its present and *future* . . . . . *licensees* throughout the world" and "that the provisions of the said agreement . . . . shall remain unaltered."

This would, in our view, include for Messerschmitt the faculty of granting licenses in the States also to other people than the Bell Portable Sewing Machine Co. for instance and open the chance for Messerschmitt to give a license "to anybody" a development which it has been your wish to avoid as far as we know and of which we have informed Dr. Wiegand.

We do not know whether your desire of preventing the grant of a license under US patent application 548 481 or

resulting patents by Messerschmitt "to anybody" refers to the entire subject matter of the application which, if we correctly remember, covers more than the similar Singer applications, or only to that surplus over the Singer applications. If that surplus is neither disclosed in the Messerschmitt drawings Kl. 52 KE, Kl. 53 KE and Kl. 54 KE there might remain something "nontransferable" under an agreement as per the "Draft for new document (3)" otherwise it will appear to us that this term is void of any bearing. You may in that case probably want to try to get some modified wording accepted which will limit the range of possible future licensees.

We had written to Dr. Wiegand that our Mr. Krüger had told Mr. Busselmeier over the telephone that it has been our opinion that the Company would in view of its priority of conception in the States be naturally little inclined to create a possibility that any, possibly little estimated, competition of the Company would be given a license, and a royalty-free license into the bargain, under the patent maintained by Singer, but we do not know whether this item was pressed for by Dr. Wiegand at Munich.

Yours very truly, L. Adamson.

cc: Mr. M. L. Waterman, New York.

[fol. 3668] IN UNITED STATES DISTRICT COURT

GOVERNMENT'S EXHIBIT 94

May 24, 1957

L. Adamson, Esq.
Singer Nahmaschinen Akt.-Ges.,
Gutleutstrasse, 42,
16 Frankfurt a/Main 1,
Germany.

Dear Mr. Adamson:

Messerschmitt A.G.

We thank you for your letter of May 20, 1957 in which you inquired as to the effectiveness of the Singer-Messerschmitt agreement executed by our Vice-President Mr. Max L. Waterman and mailed to Dr. Wiegand under cover of our letter of May 21, 1957.

In answer to your questions we would state that under the Singer-Messerschmitt agreement of April 16, 1957 Singer agreed not to enforce against Messerschmitt or any of its licensees and customers any rights derived by Singer from any patents in any countries with respect to subject matter disclosed in certain specified Messerschmitt drawings which were annexed to the agreement. These drawings disclose three existing Messerschmitt sewing machines of which none employs the automatic feeding mechanism which is disclosed in the Messerschmitt U.S. patent application Serial No. 548,481 which forms the subject matter of the proposed new Singer-Messerschmitt agreemnt mentioned in the first paragraph of this letter.

[fol. 3669] Under the newly proposed Singer-Messerschmitt agreement Singer, as the owner of all rights in and to the U.S. patent application No. 548,481, agrees to extend to Messerschmitt an irrevocable, nonexclusive, nontransferable and royalty-free license to manufacture and sell in the United States sewing machines of the type disclosed and/or claimed in application Serial No. 548,481. Under this agreement it is Singer's intention not to permit Messerschmitt to extend its license under application Serial No. 548,481 to other parties.

In other words, although Messerschmitt in the United States has the right to make and sell machines of the type designated in the Singer-Messerschmitt agreement of April 16, and to license any other parties to make and sell such machines in the United States, under the newly proposed Singer agreement, Messerschmitt will have the right to make and sell in the United States on its own account machines incorporating the automatic feed of patent application Serial No. 548,481, they will not be able to transfer such right to other parties. We do not believe that the two agreements mentioned above conflict with each other. There is no doubt but that the newly proposed agreement could be improved upon but frankly, we have no wish to prolong the present Singer-Messerschmitt negotiations needlessly, particularly since it is our understanding that [fol. 3670] Messerschmitt is agreeable to that form of the agreement proposed by Dr. Wiegand. We trust that Messerschmitt will execute this agreement as well as the assignment involving application Serial No. 548,481 as soon as possible.

We wish to thank you for your interest and assistance in this present matter.

Yours very truly, The Singer Manufacturing Company, ——, ——, Patent Department.

CC: Mr. M. L. Waterman

[fol. 3671] IN UNITED STATES DISTRICT COURT

GOVERNMENT'S EXHIBIT 95 (S-6)

Agreement

Agreement dated as of June 4 —, 1957 between The Singer Manufacturing Company, hereafter called "Singer", a corporation organized and existing under the laws of the State of New Jersey, United States of America, and Messerschmitt A.G., hereinafter called "Messerschmitt", a corporation organized and existing under the laws of the Federal Republic of Germany, for them and their respective assignees and successors.

Whereas, Singer and Messerschmitt have agreed by agreement dated as of April 16, 1957 (Frankfurt am Main) number (1) that Singer will not enforce against Messerschmitt any rights derived from any patents in any country with respect to subject matter disclosed in the drawings Kl. 52 KE, Kl. 53 KE and Kl. 54 KE, annexed to the said agreement. "Messerschmitt" includes according to number (5) of the said agreement dated as of April 16, 1957 (Frankfurt am Main): Messerschmitt A.G., its present and future subsidiary, affiliated, and associated companies, licensees, and customers, as far as the use of the sewing machines is concerned, throughout the world.

Whereas, Singer and Messerschmitt agree that the provisions of the said agreement dated as of April 16, 1957 (Frankfurt am Main) shall remain unaltered.

Whereas, Messerschmitt has assigned to Singer, its successors and assignees, for the territory of the United States of America, the entire right, title and interest in and to the United States Patent Application Serial No. 548,481, all [fol. 3672] inventions disclosed therein and in and to any and all United States Patents which may hereafter be granted therefor and in and to any and all extensions, divisions or reissues of said patents, and Messerschmitt is desirous of acquiring therefor (in return) for the territory of the United States of America a nonexclusive, nontransferable and royalty-free license to manufacture and sell sewing machines as disclosed in the said United States

patent application Serial No. 548,481 and any and all United States patents which may be granted therefor.

Now, Therefore, in consideration of the premises the parties agree as follows:

(1) Singer hereby grants unto Messerschmitt an irrevocable, nonexclusive, nontransferable and royalty-free license to manufacture and sell in the United States of America sewing machines of the type disclosed and/or claimed in United States patent application Serial No. 548,481 and as disclosed and/or claimed in any United States patents which may be granted therefor.

(2) Singer hereby agrees that it shall use its best efforts to prosecute the said application Serial No. 548,481 before the United States Patent Office for the purpose of acquiring if possible a good and valid patent therefor.

In Witness Whereof, the parties have executed this agreement as of the day and year written above.

The Singer Manufacturing Company, By M. L. Waterman, Vice President.

Witness: J. G. Stanford.

Messerschmitt A.G., By Robert Bauer.

Witness: R. Busselmeier.

[fol. 3673] IN UNITED STATES DISTRICT COURT

GOVERNMENT'S EXHIBIT 96 (S-5)

Assignment

This Assignment made the 4th day of June, 1957.

Witnesseth That,

Whereas, Messerschmitt A.G. of Augsburg, Federal Republic of Germany, hereinafter called "Messerschmitt", is the sole owner, by virtue of assignments from Willy Messerschmitt and Kurt Brandt, of an application for United States patent and the inventions claimed therein, which application was filed in the United States Patent Office by said Willy Messerschmitt and said Kurt Brandt on or about November 22, 1955 under Serial No. 548,481 and bearing as its title "Zigzag-Type Sewing Machine with Automatic Means for Machine-Made Decorative Effects".

Whereas, The Singer Manufacturing Company, of Elizabeth, New Jersey, hereinafter called "Singer", is desirous of acquiring, for the territory of the United States of America, the entire right, title and interest in and to said inventions and the said patent application Serial No. 548,481 and in and to any all United States patents which may be granted therefor.

Now, Therefore, be it known that for and in consideration of the sum of One Dollar ($1.00) and other good and valuable considerations, the receipt of which is hereby acknowledged, the said Messerschmitt has sold, assigned, transferred and set over, and by these presents does sell, assign, transfer and set over unto Singer, its successors and assigns, for the territory of the United States of America, the entire right, title and interest in and to the above mentioned inventions and patent application, and in and to any and all [fol. 3674] United States patents which may hereafter be granted therefor, and in and to any and all extensions, divisions or reissues of said patents, the same to be held and enjoyed by Singer for its own use and the use of its successors and assigns, to the full end of the terms for which said patents may be granted, as fully and entirely as the same would have been held and enjoyed by Messerschmitt had this assignment and sale not been made.

The Honorable Commissioner of Patents is requested to issue any United States patents relating to application Serial No. 548,481 in accordance with this instrument.

In Witness Whereof, Messerschmitt has caused this instrument to be signed by its directors Bauer and Fuchshuber on the day and year first above written in the presence of the subscribing witnesses.

(Illegible) ——, ——.

Witnesses: Gabriele Rueckert, Lore Stellwag.

[fol. 3675] IN UNITED STATES DISTRICT COURT

GOVERNMENT'S EXHIBIT 97

air mail

July 1, 1957.

Dr. E. Wiegand,
Ballindamm 26,
Hamburg 1, Germany.

Dear Dr. Wiegand:

During the negotiations between the representatives of Messerschmitt and Singer in Frankfurt/Main on April 16, we indicated that we might be interested in acquiring the Messerschmitt foreign patents which correspond to its United States patent application Serial No. 548,481. At that time the Messerschmitt representatives stated that they would consider assigning these patent rights to Singer in return for a license back to Messerschmitt.

We have considered this matter further and have concluded that it would be advantageous for The Singer Manufacturing Company to own all of the Messerschmitt patents and applications corresponding to United States application Serial No. 548,481. In return for the assignment of these patents and patent applications we would agree to assume the prosecution of all of the applications, pay the cost of obtaining the patents which have been issued to date and pay the yearly fees for the maintenance of the patents. In addition we would agree to grant Messerschmitt

a license under each of the patents. In short, we would like an assignment and agreement similar to the one we now [fol. 3676-3684] have with Messerschmitt for the United States application Serial No. 548,481.

Will you please contact Patentanwalt Busselmeier and sound him out as to whether Messerschmitt A.G. would be agreeable to an arrangement similar to the one outlined above.

We await with interest your reply.

Yours very truly, The Singer Manufacturing Company, ——, ——, Patent Department.

CC: Mr. M. L. Waterman, Mr. L. Adamson.

[fol. 3685] In United States District Court

Government's Exhibit 103

Singer
Nähmaschinen Co. Ag.
Direktion
Badenerstrasse 41
Zurich 4

October 17, 1957.

M. L. Waterman, c/o
MLW/OS
Mr. Milton C. Lightner,
President,
The Singer Manufacturing Co.,
New York.

Dear Mr. Lightner,

I cabled to you concerning the negotiations with Messerschmitt. We arrived at an arrangement whereby Messerschmitt will assign to Singer all of its foreign patents.* The countries are all most important ones of Europe, including Great Britain, Germany, Italy and France etc.

---

* Relating to the multiple cam zig zag machine.

P.T.O.

While the patent attorney did not have the power to sign the agreement he indicated that whatever he recommended would be acceptable to the Directors of the Company. These patents are the first that Singer will own which include among the claims certain reverse feeding means in connection with some other mechanisms of an automatic cam-block machine. They are not fundamental except to the particular mechanism of the Messerschmitt style of machine. They are a worthwhile addition to Singer's collection of automatic zigzag machine patents. It remains for Mr. Wiegand's office and the Messerschmitt attorney to finalize the exact terms of the agreement and to take care of the signing by both parties. These papers will come forward to me in New York in a short time. The bundle of patents will cost us $25,000 and compensates Messerschmitt for its patent costs and a payment to the inventor (necessary under German law) and perhaps between $5,000 to $10,000 extra. Mr. Stanford thinks this cost is really low for this number of patents. It was necessary to agree that in case of a sale of the sewing machine business by Messerschmitt the purchaser of the Company would be licensed just as Messerschmitt under these assigned patents, to build and sell the present Messerschmitt machine. Such sub-licensing is only permitted to the successor building sewing machines of the Messerschmitt Company.

I realize fully just what this means but think the chances of any situation, any more serious than already exists with Messerschmitt building this machine, is very remote.

Just to show you what we went through in enduring the negotiations I am enclosing two typewritten sheets. All this about sub-licensing others promiscuously and division of territories where the machines would be made and sold was pushed aside very quickly.

[fol. 3686] One other point to be in a memorandum in letter-form accompanying the agreement states that before Messerschmitt sells its business to anybody it will advise Singer and give it first option to purchase. This means little to us other than that we will have knowledge of what is going on before it happens. I personally believe that Messerschmitt will shortly set up an independent sewing machine company, apart from its other interests, and then the new company will dispose of this sewing machine busi-

ness. It is well that we own these patents before all this happens.

Yours very sincerely, M. L. Waterman.

Enclosure.

Copy to Mr. Stanford.

[fol. 3687] In United States District Court

Government's Exhibit 104

Received Patent Department January 28, 1958, Answered—

L. Adamson
Frankfurt Am Main
Gutleutstrasse 42-44
Singer-Haus

Confidential

January 24th, 1958.

J. G. Stanford, Esq.
The Singer Manufacturing Company
Patent Department
Elizabethport F., N. J.

Dear Mr. Stanford,

Re.: Agreement Between Messerschmitt A.G., and the Singer Manufacturing Company (Foreign Patents).

On Friday, January 17th, 1958, we had a telephone call from your patent agent Dipl.-Ing. Niemann. He informed us that Mr. Busselmeier, the patent agent of the Messerschmitt A.G., had rung him up from Augsburg in order to make an appointment with him for Saturday, January 25th, at Hamburg where Mr. Busselmeier was going to meet a client of his. Mr. Busselmeier had informed Mr. Niemann that the Agreement had not been signed yet by Messerschmitt and that he wanted to explain this to him verbally as he could not do so on the phone or in writing.

We then tried to make an appointment with Mr. Busselmeier in order to give Mr. Waterman, whom we expected

here this week, a chance to speak to him. After some difficulties we could get hold of Mr. Busselmeier who was away travelling at Cologne and Wiesbaden and invited him for a conference here at Frankfurt.

This conference took place late in the evening on Tuesday, January 21st. There were present Mr. Busselmeier, Mr. M. L. Waterman, Mr. Adamson and Mr. Krüger.

Right at the beginning Mr. Busselmeier declared that he would have to ask all participants of the conference to treat the information he was going to give us as absolutely confidential, as he had no authority from his clients to give us this information and that some of it was just at the limit yet of what he could answer for in his capacity of legal adviser of the Messerschmitt A. G.

Mr. Busselmeier explained that the managing director Dr. Rothe of the Messerschmitt A. G. had not made up his mind yet to sign the agreement. There were two items which evidently had prevented this.

[fol. 3688] The one evidently is that Dr. Rothe appears to keep turning over in his mind whether Messerschmitt had not better sell the sewing machine business, the other is that the supplementary understanding to the signing of the Agreement for the Foreign Patents by Messerschmitt, confirmed to Mr. Busselmeier by Mr. Niemann in his covering letter of November 1st, 1957, with which he handed to Mr. Busselmeier the revised draft for the proposed Singer-Messerschmitt Agreement in triplicate, should be included with the Singer-Messerschmitt Agreement proper.

This supplementary understanding covers the grant of the same license as given to Messerschmitt under the agreement also to a possible purchaser of its sewing machine business, and the option of 30 days to Singer for the acquisition of this business in case of an intended sale of it by Messerschmitt.

Mr. Busselmeier pointed out that he had never had a proper chance yet to speak to Dr. Rothe thoroughly about the agreement because that gentleman is so busy and his time taken up so much by conferences in this country and abroad regarding their principal concern, the re-building of their aircraft business, that he was not able to tell us exactly what the intentions of Dr. Rothe are.

What he could tell us was therefore only his own view

of the situation formed from the occasional short talks with Dr. Rothe and from what he had gathered from conversations of Dr. Rothe and director Mr. Keller in his presence.

It appears to Mr. Busselmeier that Dr. Rothe has been and is still ventilating in his mind the question of selling the sewing machine business. A possible reason for it is that Messerschmitt is experiencing increasing difficulties in getting good engineers and mechanics for their aircraft plant, for which reason they have already had recourse to the staff of the sewing machine plant, and another is that they then can concentrate all their energies on their aircraft business.

Out of these considerations Dr. Rothe evidently believes that the sale of the sewing machine business will be more facilitated and give a better return if a bunch of valuable patents can be sold along with it. Mr. Busselmeier mentioned that there may already exist prospective buyers and that these may also have their domicile abroad since Dr. Rothe may have come into contact with them during his frequent journeys abroad.

That Dr. Rothe harbours the thought of selling the sewing machine business Mr. Busselmeier has gathered from a talk between Dr. Rothe and Director Keller, when the former asked for figures of the value of the finished machines, semi-finished products, materials and the machinery equipment, etc. From the figures learned at this occasion Mr. [fol. 3689] Busselmeier estimates that the price with which Dr. Rothe reckons will be about 4 to 5 millions DM, including the goodwill.

Mr. Busselmeier underlined that he had no authority to tell us all this but he wished to inform us of the possible developments in view of the option Singer was going to have under the supplementary understanding to the proposed agreement because he thought it right Singer should be given the chance to exercise this option although the agreement has not been signed yet.

Mr. Waterman told Mr. Busselmeier that Singer is not interested in the acquisition of the Messerschmitt sewing machine business at present and that Singer is neither interested in the Messerschmitt foreign patents to the extent that they would buy the whole sewing machine business in

order to become owners of these patents. In fact Singer does not need the patents for any of their new machines in construction, or being designed. They were just wishing to obtain the patents for supplementing their own similar patents as Singer is often acquiring patents of other inventors.

As Singer believed that Messerschmitt might care to get a substantial round sum for them they had offered the $25,000.—. These could, if the agreement had been signed by Messerschmitt and would have been available for countersigning, be paid immediately because arrangements to that effect had all been made.

Mr. Busselmeier explained that the financial situation of his clients had eased considerably since the reorganization of that company took place so that the amount offered for the patents did not tell any more so much as before, and in view of the possible sale of the sewing machine business.

Mr. Busselmeier said he would report to Messerschmitt of his conference with Mr. Waterman, the same, as he had told his clients of his intended talk with Mr. Niemann.

The conference thus ended unfortunately with little prospects of the proposed Singer-Messerschmitt Agreement being signed in the near future. Mr. Busselmeier will report after he has had a chance to talk to Dr. Rothe.

Enclosed please find copy of a memorandum on a telephone message received from Mr. Niemann yesterday about a talk of Mr. Niemann and Mr. Busselmeier after the return of the latter to Augsburg. At this occasion Mr. Busselmeier asked for the inclusion of the supplementary under- [fol. 3690] standing regarding the grant of a corresponding license to a possible buyer of the sewing machine business, which he had named as one of the points which had delayed the signing of the agreement.

Please examine whether this request can be met and, in the affirmative, kindly let us have a draft for a revised Item 2 of the agreement including this supplementary understanding.

Yours very truly, L. Adamson.

Enclosure: Memorandum.

cc: Mr. M. L. Waterman.

[fol. 3691] IN UNITED STATES DISTRICT COURT

GOVERNMENT'S EXHIBIT 105

Received Patent Department, January 28, 1958, Answered—

WESTERN UNION

INTERNATIONAL COMMUNICATIONS

To get fast, dependable service, write in "*via W. U. Cables*" *here*

CALL LETTERS

FDK
INTL

CHARGE TO

FAX
Elizabeth, N.J.

To

January 28, 1958

FR

Via W.U.

Leo Adamson
Gersinger-Frankfurt/Main,Germany

Reurletter 24 January. We agree to purchase Patents without business under modified Busselmeier plan. If Patent owner agrees send us copy of agreement for approval.

J. G. Stanford.
Patent Department.

cc: Patent Dept.

[fol. 3692] IN UNITED STATES DISTRICT COURT

GOVERNMENT'S EXHIBIT 106

Received Patent Department, October 20, 1958,
Answered—

Inter Office

Lederer, Livingston, Kahn & Adsit

Chicago October 1, 1958.

Mr. Harold J. Stelzer,
Department 620
Sears, Roebuck and Co.

In re: Proposed Patent License of The Singer Mfg. Co.
Our file 5982

Dear Mr. Stelzer:

We have examined the draft of license agreement transmitted with Mr. Cogley's note of September 19, 1958, which we understand was submitted by Singer to cover your Model 88 machine. Our comments are as follows, and we are transmitting this letter in duplicate in case you should want to pass them on to Singer. We are omitting any comments with regard to form, which we can iron out later, as there are certain relatively minor formal matters which we may wish to discuss after the more important questions of substance have been settled.

1. It is noted that Sears is expected to pay a royalty, so far as the United States is concerned, on the basis of a pending patent application of Gegauf, Serial No. 700,079, apparently in expectation that a patent will issue thereon. I believe it is tacitly conceded that the Gritzner machine incorporating a series of individually selectable cam followers is *not* covered by the claims of Gegauf 2,832,302, although an attempt is being made to cover the same in the pending Gegauf application Serial No. 700,079. It should be borne in mind that the claims of the issued patent were required to be restricted to the specific construction incorporating a *single* cam follower slideable on a shaft parallel

to the cam shaft to actuate a selectable cam; that claims of a breadth attempting to cover both this construction and that embodying multiple followers were refused. While, of course, we are not informed as to the progress of the divisional application in the Patent Office, it seems to us that there is at least a possibility that the Patent Office will find said application unpatentable over the issued patent.

This being the case, we are wondering if Sears would be justified in agreeing to pay Singer a substantial royalty on such a construction unless and until a patent has actually issued, in view of what transpired in the Patent Office in connection with the issued Gegauf patent.

[fol. 3693] While we believe it is a fine thing for Singer to be willing to license Sears and it may be highly desirable for Sears to take advantage of this friendly attitude of Singer, it seems to us that such a license should be predicated, at least so far as a unit royalty is concerned, on the actual issue of the divisional patent to Singer.

"Bruder and I agreed to this"

Perhaps a reasonable compromise on this point would be for Sears to pay Singer a nominal lump sum fee, such as say $500.00 or the like, to cover everything up to the actual grant of a patent on the divisional application, a unit royalty to be payable thereafter.

In making this suggestion we are not unmindful of the state of the art on the subject, only part of which was noted by the Patent Examiner in connection with the issued Gegauf patent. It has come to our attention that the mechanical arrangement utilized in the divisional Gegauf application, while possibly applied for the first time to sewing machines by Gegauf, is broadly old in the art and the question of invention in applying such an arrangement to a particular mechanical operation such as a sewing machine, is, in our opinion, at least doubtful.

2. It is noted that the license is rather restricted in that Sears is authorized only to import a particular machine, namely, the "Sears Model 88" produced by a certain West German manufacturer. While we understand that this is your present plan, we are wondering if the license is not too restricted in this regard inasmuch as you may conceivably wish to change sources at some time in the future, se-

lecting possibly another German manufacturer or possibly one from another country, or even conceivably one in the United States. It seems to us, therefore, that the license should be in the terms which are usually incorporated in Sears' patent licenses, namely, licensing Sears "to make, to have made for it, to import into the United States, to use and to sell."

"Bruder and I agreed that any change in design would be covered by license modification. Singer must OK Japanese mfgr"

3. It is also noted that the license extends only to the United States and Canada. Inasmuch as Sears has retail outlets in other countries in which Singer may possibly have corresponding patent protection, we are wondering if the license should not so provide.

"Bruder and I agreed to cover when occasion arises unless Singer knows their position now."

4. Royalty rate: We note the alternative royalty schedules A and B set forth in Clause (3) of the proposed agreement and note that Sears is to make an election before Janu- [fol. 3694] ary 1st of each year as to which schedule it elects. Under either schedule the royalties would seem to be substantial.

Of course, it is primarily for you to decide whether or not these proposed royalty schedules are economically feasible and acceptable to Sears. We merely wish to point out in this connection what we have said above with regard to the question in our mind relative to patentability of the divisional Gegauf application and to question whether or not the proposed royalties are justified in these circumstances.

This Harris Canadian patent does not correspond either to the issued Gegauf patent or to the divisional Gegauf patent, neither as to disclosure or claims, and we do not see that a license thereunder would be of any value to you so far as the Gritzner machine is concerned. Without going into extensive detail as to the Harris structure, we think it is sufficient to state that it differs from the Gritzner and Gegauf structures in the following major respects: (1) Harris discloses cams in a separate housing rather than in the main head; (2) Harris' cams are axially moveable

while his follower remains relatively stationary, being moveable only transversely of the cam shaft, and (3) in the Harris structure the cams and the follower are not disposed on parallel shafts. Accordingly, if you proceed under the license to merchandise the Gritzner No. 89 machine in Canada, here again you would *not* be covered by any issued patent to Singer so far as we are advised.

Perhaps in view of the above comments you will wish to engage in further negotiations with Singer before you and that Company will be ready to finalize a license.

Very truly yours, Frank H. Marks For Lederer, Livingston, Kahn & Adsit.

FHM:hn

cc. Mr. L. Schram, Mr. E. A. Cogley.

[fol. 3695] In United States District Court

Government's Exhibit 107

Memorandum to Mr. Bruder—November 12, 1958

Proposed Patent License Between The Singer Manufacturing Company and Sears, Roebuck and Co.

We have read the letter written by Mr Marks to Mr. Stelzer and offer the following comments:

1. It is our understanding that the Gritzner Model GU machine illustrated in the attached photocopy was modified by Gritzner in an effort to avoid the claims of the foreign Gegauf patent which corresponds to our United States patent No. 2,832,302. We further understand that the Sears Model 88 machine shown to us in New York by Mr. Marks represents the modified version of the Gritzner Model GU.

In our opinion each of these machines infringes claims 1, 5, 6 and 8 of United States Gegauf patent No. 2,832,302 and claims 1 to 7 and 10 of Canadian Harris patent No. 552,072. It is our position that Sears Model 88 employs a single cam follower and that the addition of the individual fingers between such follower and each of the cams does

not avoid infringement of our United States Gegauf and Canadian Harris patents.

2. If the position is taken that the Sears Model 88 machine does not infringe the above noted Gegauf and Harris claims, then to be consistent it must be admitted that the Sears Model 88 machine infringes allowed claims 24, 27, 30, 35 and 37 of United States Gegauf application Serial No. 700,079. These claims were on November 3, 1958 allowed by the United States Patent Office and it appears that [fol. 3696] a patent will issue with respect to such application within the next several months.

3. Recognizing that there possibly exists an area of disagreement between Mr. Marks and ourselves and also the possibility that Sears might rather import and sell the Gritzner Model GU than the present Sears Model 88, the proposed Singer-Sears license agreement is based upon both the issued and about-to-be-issued United States Gegauf patents and the issued Canadian Harris patent. In this connection it will be recalled that the attached illustration of the Gritzner GU machine is the same as that attached to the proposed Singer-Sears agreement.

4. Mr. Marks has suggested that the proposed Singer-Sears agreement should be broadened so as to include countries other than the United States and Canada. The agreement was limited to the United States and Canada since the patent situation in other countries has not as yet been entirely clarified.

5. Mr. Marks further suggested that the proposed agreement should be broadened by giving Sears a license to import into the United States machines other than the Gritzner GU and Sears Model 88 machines. There are several reasons why this is not practical, one reason is that [fol. 3697] Singer owns other patents which might be involved if machines other than the designated Gritzner machines were to be imported by Sears.

[fol. 3698] IN UNITED STATES DISTRICT COURT

GOVERNMENT'S EXHIBIT 108

December 16, 1958.

Mr. M. L. Waterman
D. P. Kircher, Esq., President,
The Singer Manufacturing Company,
Singer Building, New York.

Dear Mr. Kircher:

Proposed Complaint Under Tariff Act of 1930 (Rule 337) Based Upon Singer-Owned Gegauf Patent No. 2,832,302.

The enclosed draft of the Tariff Complaint has been revised in view of the suggestions made during our December 11 conference with you and Messrs. M. L. Waterman and A. E. Pettit. Both Messrs. J. Bradley Colburn and G. M. Brumbaugh approve of the present draft.

All concerned with the present complaint believe that the outcome of our Tariff action to a large degree will be affected by the existence of the Singer-Sears Roebuck license agreement. Mr. Colburn believes that in order to be successful we must be able to convince the Tariff Commission that Singer plans to enter into no further licensing agreements with other importers.

Furthermore, in view of the importance of this aspect of our case, it would appear that it is necessary for us to give the Commission (but not the defendant) a frank but succinct explanation of the Sears license. Enclosed is a draft of a Statement "B" which has been prepared for the Commissioner's use only.

Also enclosed are copies of the following material which has been prepared for use of the Commission only;

1. Copy of a page taken from "New Japan Sewing Machine News" showing statistics of exports of Japanese sewing machines, April 1957, March 1958, inclusive, by class and designation.

[fol. 3699] 2. Copy of page 1 of International Union of Electricians, 461 Local News, October, November 1958.

Enclosed is a copy of "Exhibit 2" comprising a tabulation of foreign sewing machine imports. This exhibit will accompany the Tariff Complaint.

We have advised Messrs. Colburn and Brumbaugh that you wish to have a final discussion with them prior to the printing of the final copies of the complaint. Both gentlemen have indicated that they could be available for such a conference any day and up to and including December 23.

Yours very truly, The Singer Manufacturing Company, J. S. Stanford, CAW, Patent Department.

CC: Mr. M. L. Waterman, Mr. A. E. Pettit.

Enclosures—

Copy of Tariff Complaint
Copy of Statement "B"
Copy of Material

[fol. 3700] IN UNITED STATES DISTRICT COURT

GOVERNMENT'S EXHIBIT 109

January 7, 1959.

D. P. Kircher, Esq., President,
The Singer Manufacturing Company,
Singer Building, New York.

Dear Mr. Kircher:

Proposed Complaint Under Tariff Act of 1930 (Rule 337) Based Upon Singer-Owned Gegauf Patent No. 2, 832, 302.

Please refer to our prior letter to you of January 6, 1959.

Enclosed is an outline of the material which Mr. J. B. Colburn proposes to submit personally to the Tariff Commission some time after the filing of the Complaint proper. We believe that you have approved of all of the statements mentioned in this outline with the exception of Statement B relating to the pending license agreement between Singer and Sears, Roebuck and Company.

Enclosed is a copy of Statement B which has been revised in view of the suggestions made during our conference in

your office on December 22, 1958. Mr. Colburn approves of this Statement.

You will recall that at the December 22 conference there was no unanimity of opinion as to how this Statement should be worded. However, Mr. Colburn is quite convinced that this Statement should not include any comparisons between imported Japanese and European sewing machines with regard to the damaging effects of such imports to United States manufacturers of sewing machines. In view of Mr. Colburn's rather strong feelings in the matter we recommend approval of the enclosed Statement B.

If you approve of the enclosed Statement we would be pleased if you would advise us accordingly so that we may proceed with its printing.

[fol. 3701] You will note that a copy of the pending Singer-Sears agreement is to be attached to the Statement B. Even though a final agreement has not been executed by Singer and Sears we believe that it is in order to attach to Statement B a copy of the pending agreement which was tentatively approved by Singer and Sears in Chicago on December 2, 1958. A copy of this tentative agreement is enclosed.

Yours very truly, The Singer Manufacturing Company, ——, ——, Patent Department.

Enclosures—

Outline of material.
Copy of Statement B.
Copy of tentative agreement.

CC: Mr. M. L. Waterman, Mr. C. F. Bruder, Mr. A. E. Pettit.

[fols. 3702-3706] Statement Regarding License Agreement Between Singer and Sears, Roebuck and Company

It has been and is the policy of The Singer Manufacturing Company to grant no licenses to its competitors under any of its patents. In recent months, however, Sears, Roebuck & Co. of Chicago, Illinois, a long-time reputable distributor of competitive household sewing machines in the United States, and an important customer of other products

manufactured by the Diehl Manufacturing Co. (a subsidiary of Singer as more fully shown in paragraph 2 of the complaint filed herein by Singer) requested of Singer an important license under several Singer zigzag sewing machine patents, including Singer Patent No. 2,832,302. Sears, Roebuck & Co. has always been a keen but fair competitor. The cost of the specific machines requested to be licensed is represented to be such as to insure their resale in the United States by Sears, Roebuck & Co. at a fair competitive level.

For the foregoing reasons Singer felt constrained to acquiesce to a limited extent in the request for a license. Accordingly, Singer has agreed to grant to Sears, Roebuck & Co. a license for importation of automatic zigzag sewing machines from Western Germany restricted, however, to a specific model of such machine manufactured only by Gritzner-Kayser A.G. A copy of such agreement is attached hereto.

Singer has no intention to grant and on the contrary, in accordance with its normal policy, will not grant any other licenses under any of its zigzag sewing machine patents.

[fols. 3707-3708] IN UNITED STATES DISTRICT COURT

GOVERNMENT'S EXHIBIT 111

Husqvarna Vapenfabriks Aktiebolag
Verkställande direktören
Mr. Kindberg

Huskvarna, April 18, 1959.

By Air-Mail

Mr. Donald P. Kircher
President of Singer Manufacturing Co.
Singer Building
149 Broadway
New York City, U.S.A.

Dear Sir:

A few days ago I received through the Swedish Embassy in Washington copy of the Tariff Commission Public Notice re certain Household Automatic Zigzag Sewing Machines, dated March 16, 1959.

I find that the hearing before the Tariff Commission will take place already on May 5, which is an extraordinarily short notice for such an event.

I fully understand the necessity of combating the unfair competition of the Japanese, which is hurting you as well as us on different markets of the world, but I do hate the idea that Singer and Husqvarna, who have had a friendly cooperation with each other since 1872, should appear before the Commission on different sides of the fence.

There are certain aspects of this question which might be of value for both of us to discuss at a personal meeting before the hearing. I am willing to come over to New York at a short notice and will therefore take the liberty of calling you up in the middle of next week in order to arrange a suitable meeting time in New York.

Sincerely yours, Thure Öberg.

[fol. 3709] IN UNITED STATES DISTRICT COURT

GOVERNMENT'S EXHIBIT 113

MEMORANDUM—JGS-F—April 30, 1959

On April 28, in New York, I discussed with Mr. Kindberg, an executive of Husqvarna in Sweden, Mr. Dahlberg, head of the Husqvarna Patent Department and Mr. Herbert O. Bergdahl, the President of Husqvarna of Sweden, Inc., U.S.A. the position of the Husqvarna Company in the Tariff Commission case in Washington. These gentlemen pointed out that since 1872 Husqvarna and Singer had been friendly competitors and neither has ever dealt unfairly with the other. It was pointed out that Husqvarna ships about 3,000 automatic zigzag machines into the United States each year. It was further brought out by the Husqvarna representatives that Husqvarna has a number of patents in foreign countries which they feel will be infringed if Singer sells the 401 machine in those countries and consequently it would be of advantage to both parties if a cross-license agreement could be made in order that Husqvarna may sell its automatic zigzag machines in all countries of the world without fear of patent infringement and Singer could sell its 401 machine in all countries of the world without the question of infringement of the Husqvarna patents arising.

It was pointed out to these gentlemen that Singer could not at this time enter into a license agreement, for doing so would have a very serious effect upon the proceeedings now before the Tariff Commission, and the Tariff Commission could not set itself up as a group which would encourage licensing of United States patents by excluding certain goods from United States commerce. This matter was discussed at great length and Husqvarna representatives were assured that Singer had nothing but the kindest feelings towards them as a company but that we could not accede to their request at this time.

The Husqvarna representatives feel that under the circumstances they are compelled to appear before the Tariff Commission and do all they can to destroy the Singer patent and they further said that they would not like to

do this as it placed them in a position of siding with Singer competitors against Singer and asked that I advise them specifically whether or not they should appear under these circumstances. I informed these gentlemen that I could not under any circumstances act as their counsel in the case and advise them as to what they should or should not do under the present circumstances, and that they alone must make this decision.

[fol. 3710] The gentlemen left with the remark that they would see us in Washington, however, they did not seem to be particularly irritated over the situation which reached such an unfortunate impasse, and there was an indication that they may come back to see us after the Tariff Commission decision has been handed down if they felt it desirable.

[fol. 3711] IN UNITED STATES DISTRICT COURT

GOVERNMENT'S EXHIBIT 114

President's Office, Received May 4, 1959

Husqvarna Vapenfabriks Aktiebolag
Verkställande direktören

Huskvarna, April 30, 1959.

By Air Mail

Mr. Donald P. Kircher
President of Singer Manufacturing Co.
Singer Building
149 Broadway
New York City, U.S.A.

Dear Mr. Kircher:

Over the telephone yesterday Mr. Kindberg reported to me about the friendly conversation he had had with you and the interest which you, Mr. Kircher, had shown for an agreement between our two companies about a cross licensing. I was glad to learn this, and I wish to thank you for your positive attitude.

At continued talks with your Mr. Stanford it appeared—if I have rightly understood the situation—that your lawyer had certain apprehensions about concluding an agreement *before* the Tariff Commission hearing, as this might be somewhat detrimental to Singer. This I can well understand.

The situation being as stated above, we have to consider how to act at the hearing, which unfortunately is very close. The best would, of course, be if Husqvarna simply did not appear. This might, however, have an unfavourable effect on our future position. Therefore, we should have in advance some kind of assurance from you.

Provided we could arrive at a Gentlemen's Agreement to the effect that we would later—after the hearing—conclude a formal agreement on terms which you and I would jointly consider fair on the basis of the situation as it is, then I would instruct Mr. Kindberg and our other legal representatives in the United States to stay away from the hearing. This personal contact between you and me will anyway not be mentioned at any hearing or otherwise.

To make this possible in view of the short time at our disposal, I have to ask you kindly to confirm this to me by a short cable, on the receipt of which I will immediately instruct Mr. Kindberg in accordance therewith.

With interest looking forward to hearing from you, I am,

Sincerely yours, Thure Öberg.

Copy to Mr. J. G. Stanford.

[fol. 3712] IN UNITED STATES DISTRICT COURT

GOVERNMENT'S EXHIBIT 115

WESTERN UNION

INTERNATIONAL COMMUNICATIONS

CABLEGRAM

W. P. MARSHALL, PRESIDENT

To THURE OBERG

HUSQVARNA VAPENFABRIKS AKTIEBOLAG
HUSKVARNA (SWEDEN)

May 4, 1959

Via WU CABLES

AS MENTIONED YOUR LETTER THIRTIETH WE ARE NOT FREE AT PRESENT TIME TO DISCUSS POSSIBILITY OF CROSS LICENSE ARRANGEMENTS STOP WE HAVE ADVISED YOUR WASHINGTON ATTORNEY THAT IT IS NOT OUR INTENTION TO OFFER ANY PROOF AT HEARINGS IN WASHINGTON RESPECTING HUSQVARNA UNLESS YOUR REPRESENTATIVES PLACE EVIDENCE IN RECORD STOP PRESUME YOU HAVE HAD DIRECT REPORTS OF THIS FROM YOUR PEOPLE IN WASHINGTON

KIRCHER.

Copy to Mr. J. G. Stanford.

[fol. 3713] IN UNITED STATES DISTRICT COURT

GOVERNMENT'S EXHIBIT 116

President's Office, Received March 13, 1959

Phoenix
Nähmaschinen A.-G. Baer & Rempel - Bielefeld
Established 1865 - Gegründet 1865 - Fondée en 1865

Dr. Carl Schwalb

Mr. Donald P. Kircher
President
Singer Corporation
149 Broadway
New York, N.Y.—U.S.A.

9th March, 1959.

Dear Mr. Kircher,

Due to the fact that our firm is mentioned in the complaint submitted by you to the US Tariff Commission, it was with special care that I studied its contents.

I suppose that the objections presented by our solicitors, Messrs. Knight Bros., will be brought to your attention. Permit me to add that already in 1953 we developed our "Automatic" absolutely independently, that all our regular retail prices in the USA passed the US $300,—limit and that no intensive sales efforts have been made by us in your country.

We have also objected to the Patent assigned to you. Furthermore, in 1955, we signed an agreement with Messrs. Fritz Gegauf AG. according to which Gegauf is bound to grant us the rights of using all patents based on this principle, consequently also in the USA. Gegauf, therefore, should have made the respective reservation of our rights.

It is the purpose of this statement to show that the reproaches of unfair competition globally raised by you, are by no means justified as far as the firm represented by me is concerned. I cannot believe that in view of such a situation you will continue to maintain your complaint or other steps against us.

Permit me, therefore, the question whether you are interested in a direct settlement of this matter with our firm. I should highly appreciate such a procedure, because in my position as a president of the Association of the Sewing Machine Industry in the Federal Republic of Germany and as a delegate to the Comité Européen de Liaison des Industries de la Machine à Coudre (Celimac), I frequently have to cooperate with the managing gentlemen of your firms in the Federal Republic of Germany and other European countries.

Yours very truly, Phoenix Nähmaschinen A.-G.
Baer & Rempel, Dr. Carl Schwalb.

Copy to Mr. J. G. Stanford, Mr. M. L. Waterman.

[fol. 3714] IN UNITED STATES DISTRICT COURT

GOVERNMENT'S EXHIBIT 117

Received Patent Department, March 17, 1959, Answered —.

The Singer Manufacturing Co.
Singer Building
149 Broadway
New York 6, N. Y.

In replying please refer to DPK—10P

J. G. Stanford, Esq.
Patent Department
Elizabethport, New Jersey

Dear Mr. Stanford:

I am enclosing herewith a copy of a letter dated March 9 from Dr. Carl Schwalb of Phoenix Nahmaschinen A.G.

I am somewhat at a loss to understand the third paragraph of the letter as I do not recall anything about the Gegauf arrangement concerning a prior license to Phoenix. Perhaps you can let me know about this and I would also

appreciate it if you would give me a draft of the kind of reply which you think should be made to Dr. Schwalb.

Yours very truly, Donald P. Kircher, President.

Enc.

Copy to Mr. M. L. Waterman, Paris.

[fol. 3715] IN UNITED STATES DISTRICT COURT

GOVERNMENT'S EXHIBIT 118

March 20, 1959.

D. P. Kircher, Esq., President,
The Singer Manufacturing Company,
Singer Building, New York.

Dear Mr. Kircher:

This is in reference to your letter of March 17, 1959, DPK–10P, with which was enclosed a copy of a letter from Dr. Schwalb of Phoenix Nahmaschinen A.G.

If there is a written agreement between Mr. Gegauf and Phoenix concerning the United States patent application which issued into the United States patent now before the Tariff Commission, Mr. Gegauf failed to advise me concerning the same. I am sure that Mr. Gegauf would have reserved rights in the United States patent application for the firm Phoenix, as he did for Vigorelli, if such is the case. I have examined the papers filed with the Tariff Commission on behalf of Phoenix and it is interesting to note that they do not allege or mention that Phoenix has any rights under the Gegauf patent.

As you know, at this time we are not in a position to consider a direct settlement of the question of infringement of our Gegauf United States patent by Phoenix and to grant it a license thereunder. Also, it would seem unwise at this time to become involved in any argument with the officials of Phoenix relating to their alleged rights under our patent even though we believe that they are misinformed.

With the above in mind we are enclosing a draft of a proposed letter to Dr. Schwalb.

Yours very truly, The Singer Manufacturing Company, ——, ——, Patent Department.

Enclosure—

Draft of proposed letter.

CC: Mr. M. L. Waterman, New York, Mr. M. L. Waterman, Europe.

[fol. 3716] In United States District Court

Government's Exhibit 119

Proposed Letter

Dr. C. Schwalb,
Phoenix Nähmaschinen A.-G.,
Kleine Bahnhofstr. 3,
Bielefeld, West Germany.

Dear Dr. Schwalb:

This will acknowledge receipt of your letter of March 9 relative to the action we have taken with the Tariff Commission in Washington.

We are not informed as to any right you may have under our United States patent of Gegauf No. 2,832,302 which is now before the Tariff Commission. The application for this patent was acquired by Singer in good faith and before its acquisition an exhaustive examination was made which included records in the Patent Office in Washington and we found no licenses or assignments adversely affecting our title.

This week the Tariff Commission decided to institute a formal investigation and has set hearings for May 5, 1959. Under the circumstances I think it best for all concerned not to enter into a discussion of this matter until after final hearings by the Commission have been concluded.

Yours very truly, ——, ——.

[fol. 3717] IN UNITED STATES DISTRICT COURT

GOVERNMENT'S EXHIBIT 120

Received Patent Department, April 6, 1959, Answered —.

April 3, 1959.

Dr. Carl Schwalb
Phoenix Nahmaschinen A.G.
Kleine Bahnhofstr. 3
Bielefeld, Western Germany

Dear Dr. Schwalb:

This will acknowledge receipt of your letter of March 9 relative to the action we have taken with the Tariff Commission in Washington.

We are not informed as to any right you may have under our United States patent of Gegauf No. 2,832,302 which is now before the Tariff Commission. The application for this patent was acquired by Singer in good faith and before its acquisition an exhaustive examination was made which included records in the Patent Office in Washington and we found no licenses or assignments adversely affecting our title.

As you no doubt have been advised, the Tariff Commission has decided to institute a formal investigation and has set hearings for May 5, 1959. Under the circumstances, while this matter is pending before the Commission, I think it best for all concerned not to enter into discussions of this matter until after final hearings by the Commission have been concluded.

Yours very truly, Donald P. Kircher, President.

Copy to Mr. M. L. Waterman, Mr. J. G. Stanford.

[fol. 3718] IN UNITED STATES DISTRICT COURT

GOVERNMENT'S EXHIBIT 121

Received Patent Department, January 6, 1958, Answered—.

Dériaz, Kirker & Cie
Genève
Rue Du Mont-Blanc 14

Bureau D'Ingénieurs-Conseils En Propriété Industrielle
Mr. J. G. Stanford,
The Singer Manufacturing Co.,
Patent Department,
Elizabethport F.,
New Jersey, U.S.A.

26th December, 1957.

Dear Mr. Stanford,

re: Gegauf's U.S.A. patent application Serial No. 700 079 of the 2nd December, 1957 (division)

We have just received the original and a copy of the assignment executed by Mr. Gegauf on the 23rd December, 1957, in Zurich, and concerning U.S. patent application Serial No. 700.079 of the 2nd December, 1957.

Mr. Gegauf would appreciate that, in view of the prosecution in certain European countries, the publication of the basic U.S. patent application Serial No. 358,377 be delayed as much as possible. Mr. Willi wrote to us that, as far as you have no contrary important reason, his client would like to ask you to pay the final fee at the end of the term, in order to delay publication of the patent.

Yours faithfully, Deriaz, Kirker & Cie, G. E. Kirker.

Enclosures (sep.) air mail and reg.

1 assignment with dupl.

[fols. 3719-3720] IN UNITED STATES DISTRICT COURT

GOVERNMENT'S EXHIBIT 122

air mail

January 6, 1958.

Mr. G. Kirker,
Deriaz, Kirker & Cie,
Rue Du Mont-Blanc 14,
Geneva, Switzerland.

Dear Mr. Kirker:

Gegauf's U.S.A. patent Application Serial No. 700,079 of December 2, 1957 (Division).

Thank you for your letter of December 26, 1957, K/JP, enclosing the original and a copy of the assignment executed by Mr. Gegauf on December 23, 1957.

We do not know at this time whether we can comply with Mr. Gegauf's request that the publication of United States Gegauf application Serial No. 358,377 be delayed as much as possible. In any event, we shall advise you in the near future as to the action we propose to take in this matter. In this connection we might mention that there is nothing disclosed in United States application Serial No. 358,377 that has not already been published in the Gegauf Italian patent No. 501,172 and in Gegauf Swiss. patent No. 318,123.

Yours very truly, The Singer Manufacturing Company, ——, ——, Patent Department.

CC: Mr. M. L. Waterman.

[fol. 3721] IN UNITED STATES DISTRICT COURT

GOVERNMENT'S EXHIBIT 124

Received Patent Department, January 20, 1958,
Answered January 21, 1958.

Dériaz, Kirker & Cie
Bureau D'Ingénieurs-Conseils En Propriété Industrielle
Fondé En 1877 Par
E. Imer-Schneider

air mail

Mr. J. G. Stanford,
The Singer Manufacturing Co.,
Patent Department,
Elizabethport F.,
New Jersey, U.S.A.

17th January, 1958.

Dear Mr. Stanford,

Referring to your letter of the 6th inst., we would give you the following information we have obtained on the telephone, from Mr. Willi, of Blum & Co. attorneys of Gegauf.

The reason why they would like to postpone as much as possible the issuance of the U.S. patent deriving from Serial No. 358,377 is the following:

For the corresponding application in Germany, there are opposition proceedings in Germany. The discussion with the German Examiner is not yet completed and one of the prior art found in America has not been cited, either during the examination as to novelty or during the opposition proceedings in Germany. If the U.S. Patent issues shortly, it is to be feared that the German Examiner sees this patent and notices the list of prior art cited in America, and which will be indicated at the end of the U.S. patent. Then the German Examiner will be able to pick up certain U.S. patent which is particularly dangerous for Gegauf and, consequently, he might raise further difficulties and possibly refuse the patent. We do not know exactly which

is said U.S. patent, but Mr. Willy has given us the name on the telephone.

As the question of opposition in Germany will be settled probably within one or two months, and since the term for paying the final fee will not expire before May next, we hope you will be in a position to take Mr. Gegauf's request into account, in order that he gets in Germany the broadest possible claims. It seems that Singer has a certain interest in so doing, i.e. that Gegauf obtains broad claims in Germany for said case.

We are requesting Mr. Willi to let us know immediately as soon as the matter is settled in Germany.

Yours very truly, Deriaz, Kirker & Cie, G. E. Kirker.

[fol. 3722] IN UNITED STATES DISTRICT COURT

GOVERNMENT'S EXHIBIT 125

January 21, 1958.

Mr. G. Kirker:
Deriaz, Kirker & Cie,
Rue Du Mont-Blanc 14,
Geneva, Switzerland.

Dear Mr. Kirker:

Gegauf's United States Patent Application Serial No. 700,079 of December 2, 1957 (Division).

We have received your letter of January 17, 1958 advising us why Mr. Willi of Blum & Co., attorneys for Gegauf, wishes us to postpone as long as possible the issuance of the United States patent deriving from United States Serial No. 358,377.

We do not expect to have the subject United States patent issued within the immediate future but circumstances may require us to have it issued before next May. In any event, if we do find it necessary to issue this patent before next May we shall advise you accordingly. At the same time we would be pleased if you would have Mr. Willi tell us as soon as the German matter is settled.

We would also like to know as soon as possible the

number of the United States patent which Mr. Willi believes is dangerous with respect to the German Gegauf patent application.

Yours very truly, The Singer Manufacturing Company, ——, ——, Patent Department.

CC: Mr. M. L. Waterman.

[fols. 3723-3724] IN UNITED STATES DISTRICT COURT

GOVERNMENT'S EXHIBIT 126

air mail

January 30, 1958.

Mr. M. L. Waterman,
Singer Nahimaschine Co. A.-G.,
Badenerstrasse 41,
Zurich, Switzerland.

Dear Mr. Waterman:

I am sure that you will be pleased to know that the Patent Office has now finally agreed to the amendment of the Gegauf patent application. This puts us in a position to pay the final fee and have the patent issue to the Singer Company in about 6 weeks time. Yesterday I called Mr. Kircher and gave him this information and at the same time called attention to Mr. Gegauf's request that the final fee not be paid until a later date and recommended that, due to circumstances that exist at the present time, Mr. Gegauf's request be respected. Mr. Kircher readily agreed that the final fee should not be paid at this time.

• • • • • • •

[fols. 3725-3728] IN UNITED STATES DISTRICT COURT

GOVERNMENT'S EXHIBIT 127

February 18, 1958.

Mr. G. Kirker,
Deriaz, Kirker & Cie,
Rue Du Mont-Blanc 14,
Geneva, Switzerland.

Dear Mr. Kirker:

Gegauf United States Patent Application Serial No. 358,377 Filed May 29, 1953.

In order for us properly to exploit our United States patent rights it appears necessary for us to issue the above application as a patent as soon as possible. We are particularly desirous of asserting several of our United States patents against the importers into the United States of Japanese-made multi-cam ornamental stitch machines.

It is highly desirable that the Gegauf patent application be issued promptly and, therefore, we would like to pay the final fee on or before February 28, 1958 in which event a patent should issue on or about April 18, 1958. This is only two weeks before May 1, the date mentioned by Mr. Willi.

In the event that Mr. Willi should have a strong and valid objection with respect to our proposed action please cable us accordingly.

Yours very truly, The Singer Manufacturing Company, ——, ——, Patent Department.

CC: Mr. D. P. Kircher, Mr. M. L. Waterman.

[fol. 3729] IN UNITED STATES DISTRICT COURT

GOVERNMENT'S EXHIBIT 130

Received Patent Department, May 28, 1959, Answered—.

The Singer Manufacturing Co.
Singer Building
149 Broadway
New York 6, N. Y.

May 27, 1959.

In Replying Please Refer to MLW:V3

F. Gegauf, Esq.
Fritz Gegauf Aktiengesellschaft
Bernina Nahmaschinenfabrik
Steckborn, Switzerland

Dear Mr. Gegauf:

As we previously advised you, we have instituted a proceeding before the United States Tariff Commission in an endeavor to prevent the importation into the United States of all non-licensed sewing machines which would infringe our Gegauf Patent No. 2,832,302. During a recent hearing before the Tariff Commission, Singer was asked by the Commissioners if Pfaff of Germany was licensed under Gegauf Patent No. 2,832,302 so that it could freely export infringing machines to the United States.

We advised the Commissioners that Pfaff had no such license, and it was not contemplated that such a license would be extended to Pfaff. However, in view of Paragraph (3) of the Singer-Gegauf agreement of December 5, 1957, our answer to the Commissioners was perhaps not too convincing.

We believe that the only way in which we can properly convince the Commissioners as to Pfaff's position in this matter is to revise Paragraph (3) of our agreement of December 5, 1957. Frankly, we think that such a revision of the agreement is quite necessary in order that we may have a better chance of prevailing before the Tariff Com-

mission. We hope that you will have no objection to deleting Pfaff's name from our agreement.

It is our suggestion that this matter could be most expeditiously handled by executing an agreement between Singer and yourself which would have the effect of deleting all mention of Pfaff. Such an agreement is enclosed in duplicate; and, if you believe that this new agreement is in proper order, we would be pleased if you would execute it in duplicate and return one of the copies to us so that we may convince the United States Tariff Commission as to Pfaff's position in the present matter.

[fols. 3730-3732] We would deeply appreciate any attention which you can give to this matter and, particularly, since time is a very important element.

Very truly yours, M. L. Waterman, Vice President.

Enclosure

cc: Mr. J. G. Stanford (not noted on original).

[fols. 3733-3735] IN UNITED STATES DISTRICT COURT

GOVERNMENT'S EXHIBIT 132

Fritz Gegauf Limited
Steckborn (Switzerland)
Sewing Machine Manufacturers

Steckborn, June 10th, 1959.

The Singer Manufacturing Co.
Singer Building
149 Broadway
New York 6, N. Y., U.S.A.

Dear Sirs:

We acknowledge receipt of your letter of May 27th, to which was given our best attention. As we are in no close connection whatsoever with Pfaff, we are in principal ready to conclude a new agreement with you in which all mention of Pfaff is deleted.

On this occasion we advise you that on April 5th, 1955, we have executed an agreement with Phoenix, photostatic

copy of which is enclosed. We did not mention this agreement in our negotiations with you time ago, because we were and still are of the opinion that the agreement with Phoenix refers exclusively to our German application G 11 654 and thus is solely and exclusively valid for the West German territory only.

Since the agreement between Bernina and Phoenix dated April 5th, 1955, was not mentioned in our agreement with you of December 5th, 1957, because of the reasons outlined above, we suggest that, in order to avoid any claims for compensation of damages Phoenix might put against us, the mention of Pfaff is deleted in the new agreement, but substituted by the mention of Phoenix.

Should our agreement with Phoenix not be considered a sufficient reason for such a substitution by the Tariff Commission, or should yourself because of other reasons not be interested to introduce the mention of Phoenix in the agreement to be newly concluded between us, we then agree not to mention both Pfaff and Phoenix under the explicit condition that you assume to their full extent all consequences that might fall on us on account of our agreement with Phoenix from April 5th, 1955.

We look forward to your comment and remain with kind regards,

sincerely yours, Fritz Gegauf Limited, F. Gegauf.

enc.

[fol. 3736] IN UNITED STATES DISTRICT COURT

GOVERNMENT'S EXHIBIT 133

Received Patent Department, June 22, 1959, Answered —.

Dériaz, Kirker & Cie
Bureau D'Ingénieurs-Conseils En Propriété Industrielle
Fondé En 1877 Par
E. Imer-Schneider

Air Mail

Mr. J. G. Stanford,
Patent Department,
The Singer Manufacturing Company,
Elizabethport F., New Jersey

June 17, 1959.

Confidential.

Dear Mr. Stanford,

Re: Agreement with Bernina

Referring to Mr. Waterman's cable of the 9th instant and to your today's telephone call, please find below a résumé of the interview the writer had on the 15th instant in Zurich with Mr. Gegauf, his daughter, his son and Mr. Willy.

Bernina is willing to help you as much as possible in your fight in the U.S.A.

Bernina wrote you recently about a difficulty which arose with Phoenix. You have received a copy of their agreement with Phoenix. The writer has read the agreement and is of the opinion that it concerns Germany only and not to any foreign country. The arguments in favour of this opinion are as follows:

1) German patent applications only are mentioned in agreement;
2) At the time of signature of the agreement, patent applications were already filed in other countries for the Bernina invention referred to in the agreement;

3) It is a general rule that the abandonment of a right cannot be presumed but must be expressly stated. In the present case, giving to Phoenix the right to use the invention abroad would mean the abandonment of a part of the rights of Gegauf, and such abandonment should have been expressly men- [fol. 3737] tioned in the agreement, if such had been the intention of the parties. Assuming that such abandonment exists, as Phoenix do presently, is not in agreement with the fundamental rules.

Nevertheless Mr. Gegauf senior would not risk a litigation with Phoenix, even if there were 90 or 99% chances in his favour.

After we had this discussion, we reached the three following proposals:

1. The agreement between Bernina and Singer remains without any change and Mr. Gegauf prepares an Affidavit for the Tariff Commission in which he explains why he asked, at the time of signature of the agreement, that Pfaff be excluded from the agreement.

   Should this proposal enable you to remove the difficulties you have with the Tariff Commission, Mr. Gegauf would agree to prepare and give this Affidavit provided Singer agree to cover Bernina against the risk of possible legal action by Phoenix on the basis of the agreement of May 5, 1955. A letter from Singer to Bernina would be sufficient in this respect.
2. The agreement is replaced by the one recently proposed by Singer, which no longer mentions Pfaff. Mr. Gegauf can, in addition, supply you with an Affidavit as suggested in the preceding paragraph 1. As a counterpart Singer would have to cover Bernina against Phoenix, as indicated under 1. above.
3. The agreement is replaced by another one in which the name Phoenix is substituted for Pfaff. In this case Mr. Gegauf could prepare and send you an Affidavit explaining:

   (a) why he asked, at the time of signature of the agreement, that Pfaff be excluded from the agreement;

(b) why he now asks that Phoenix be introduced in lieu of Pfaff.

Remark. Since 1955 Phoenix has merged with Anker. In the case of the third proposal the present name of the company after merger would have to be given in the agreement.

[fols. 3738-3742] During the conversation we had today over the telephone, it was very difficult to hear you because your voice was periodically interrupted. We understand that you agree with proposal No. 2. and that Singer will be prepared to address to Bernina a letter stating that in case Phoenix did institute legal proceedings against Bernina, claiming the right to use the invention not only in Germany but also abroad and particularly in the United States, you would assume the financial risk which Bernina would run in the matter. In other words, Singer would give Bernina the assurance that, should the latter have costs or damages to pay to Phoenix on the basis of the agreement of May 5, 1955, Singer would meet the costs.

Mr. Gegauf explained to us that in spite of his sincere wish to help Singer, he is not in a position to take the risk of denying Phoenix the right they claim.

The matter being urgent, we suggest that Singer should write to Bernina, as soon as possible, the requested letter, if they agree. In the meantime Mr. Gegauf will sign the agreement and send it to you immediately upon receipt of the letter covering his company against Phoenix.

Yours very truly, Deriaz, Kirker & Cie,
E. E. Kirker.

[fol. 3743] IN UNITED STATES DISTRICT COURT

GOVERNMENT'S EXHIBIT 136

July 14, 1959.

G. Kirker, Esq.,
Deriaz, Kirker & Cie.,
Rue du Mont-Blanc 14,
Geneva, Switzerland.

Dear Mr. Kirker:

Agreement with Bernina.

Thank you very much for your letter of June 17, 1959, K/los, advising us as to the results of the interview which you had on the 15th of June in Zurich with Mr. Gegauf, his daughter, and his son and Mr. Willi.

We were disturbed when we learned of the existence of agreement executed on May 5, 1955 between Gegauf and Phoenix. Mr. Gegauf never advised us of the existence of this agreement even though he was obligated to do so under the Singer-Gegauf agreement of April 14, 1956. Incidentally you may recall that it was Mr. Gegauf who inserted paragraph (6) in our April 14, 1956 agreement, which paragraph reads as follows:

> 6) All agreements already concluded by either party and concerning or having a connection with any of the above mentioned patents or patent applications must be communicated to the other party for approval before signature of the present agreement.

In a letter to us dated June 10, 1959, Mr. Gegauf in reference to the Gegauf-Phoenix agreement, stated that "we were and still are of the opinion that the agreement with Phoenix refers exclusively to our German application G.11,654 and thus is solely and exclusively valid for the West German territory only." We note from your letter to us of June 17, 1959 that you agree with Mr. Gegauf's interpretation of the Gegauf-Phoenix agreement.

Although we dislike Mr. Gegauf's attitude, particularly with respect to the Phoenix agreement, we presume that he is adamant about wishing Singer to assume any dam-

ages which may result if Phoenix should bring legal actions against Fritz Gegauf A.G. on the basis of the Gegauf-Phoenix agreement.

[fol. 3744] In view of this situation we are willing to settle this entire matter in accordance with paragraph (2) contained on page 2 of your above noted letter. In order to carry out our part of this we are enclosing an indemnification letter addressed to Mr. Gegauf and signed by our Vice-President and Director, Mr. Max L. Waterman. We trust that when you present this to Mr. Gegauf he will promptly execute the newly proposed Singer-Gegauf agreement as well as prepare the suggested affidavit. As mentioned in the enclosed letter, we would like to have the affidavit prepared in the English language and contain, inter alia, a definite statement that Fritz Gegauf has never extended to Phoenix any rights in and to the United States Gegauf patents Nos. 2,832,302 and 2,877,726.

We have sent Mr. Waterman's letter to you so that you may present it personally to Mr. Gegauf and thereby perhaps expedite this entire matter.

We thank you for any assistance which you can extend to us in connection with the above.

Yours very truly, The Singer Manufacturing Company, ——, ——, Patent Department.

Enclosure—

Letter

[fol. 3745] IN UNITED STATES DISTRICT COURT

GOVERNMENT'S EXHIBIT 137

Received Patent Department, July 17, 1959, Answered —.

The Singer Manufacturing Co.
Singer Building
149 Broadway
New York 6, N. Y.

In replying please refer to MLW:V3

July 14, 1959

Fritz Gegauf, Esq.
Fritz Gegauf Aktiengesellschaft
Bernina Nahmaschinenfabrik
Steckborn, Switzerland

Dear Mr. Gegauf:

It is our understanding that there never has existed, and there presently does not exist, any agreements or commitments, either oral or written, between G. M. Pfaff A.G. of Kaiserslautern, Germany, and your firm of Fritz Gegauf A.G. relating to the specific subject matter of the Singer-Gegauf agreements of April 14, 1956 and December 5, 1957, and more specifically to United States patent applications Serial Nos. 358,377, filed May 29, 1953, and 700,079, filed December 2, 1957, which two applications matured respectively into United States Patents Nos. 2,832,302 and 2,877,726.

It is our further understanding that on or about May 5, 1955, your firm of Fritz Gegauf A.G. executed an agreement with Phoenix Nahmaschinen A.G. of Bielefeld, Germany, relating on your part exclusively to your German patent application G.11-654 VII/52a.

In your letter to Singer of June 10, 1959, you stated that your agreement of April 5, 1955 (we believe this date should be May 5, 1955) with Phoenix "refers exclusively to our German application G.11,654 and thus is solely and exclusively valid for the West German territory only."

Our Swiss attorney, Mr. Kirker, agrees with your interpretation of the Gegauf-Phoenix agreement.

We have requested you to delete all reference to the name of Pfaff from the Singer-Gegauf agrement of December 5, 1957, in view of the fact that Pfaff has no rights whatsoever under the above-noted United States Patents Nos. 2,832,302 and 2,877,726.

You have agreed to our request provided Singer in turn will cover your firm of Fritz Gegauf A.G. against the risk of possible legal actions by Phoenix on the basis of the agreement of May 5, 1955 between Fritz Gegauf A.G. and Phoenix.

[fol. 3746-3747] Accordingly, therefore, The Singer Manufacturing Company hereby promises to indemnify Fritz Gegauf A.G. against losses which it may sustain through any legal actions which may be brought by Phoenix against Fritz Gegauf A.G. and based upon a claim by Phoenix that the aforesaid agreement of May 5, 1955 extends any rights to Phoenix under United States Patents Nos. 2,832,302 and 2,877,726.

We further understand that you will furnish Singer with an affidavit explaining why at the time of the execution of the Singer-Gegauf agreement of December 5, 1957, you asked that Pfaff be mentioned in such agreement. We would be pleased if you would have this affidavit prepared in the English language and include therein a statement that you have never extended to Pfaff any rights in and to the subject matter of the two aforesaid United States Patents Nos. 2,832,302, and 2,877,726.

Very truly yours, The Singer Manufacturing Company, M. L. Waterman Vice President and Director.

cc: Mr. G. Kirker, Mr. J. G. Stanford not noted on original.

[fol. 3748] IN UNITED STATES DISTRICT COURT

GOVERNMENT'S EXHIBIT 139

Received Patent Department, July 28, 1959, Answered July 31, 1959.

Dériaz, Kirker & Cie
Genève
Rue Du Mont-Blanc 14
Bureau D'Ingénieurs-Conseils En Propriété Industrielle
Fondé En 1877 Par E. Imer-Schneider

air mail registered

Mr. J.G. Stanford,
Patent Department,
The Singer Manufacturing Company,
Elizabethport F., New Jersey, U.S.A.

24th July, 1959

Dear Mr. Stanford,

re: Agreement with Bernina.

Referring to your letter of the 14th July, we would inform you that the writer had an interview with Mr. Gegauf Sen., and with Mr. Willi, in Zurich, on the 22nd inst. We prepared an affidavit according to paragraph numbered 2 on page 2 of your letter of the 17th June, and had it executed by Mr. Gegauf at the U.S. Consulate in Zurich.

At the same time, Mr. Gegauf signed the new agreement you submitted to him.

We are sending you the original and one copy of the affidavit, and the original of the agreement. The date of the agreement is the same as that of the affidavit, i.e. July 22nd, 1959.

We hope that the matter is thus settled satisfactorily for you.

Mr. Gegauf confirmed that he is willing to do all in

his power for helping Singer in their present action in the U.S.A.

We remain at your disposal and are,

Very truly yours, Deriaz, Kirker & Cie, G. E. Kirker.

enclosures (reg. airmail 1 affidavit with copy, 1 agreement)

[fol. 3749] Agreement

Agreement Dated July 22, 1959, between The Singer Manufacturing Company, hereinafter called "Singer", a Corporation organized and existing under the laws of the State of New Jersey, United States of America, and Fritz Gegauf Aktiengesellschaft, Bernina Naehmaschinenfabrik in Steckborn, Switzerland, hereinafter called "Gegauf" a Corporation organized and existing under the laws of Switzerland, for them and their respective successors.

Whreas, Singer and Gegauf have agreed by agreements dated April 14, 1956 and December 5, 1957, inter alia, that neither party would attack the other in any country of the world on the basis of certain patents and patent applications identified in the said agreement of April 14, 1956 and that all right, title and interest in and to certain United States patent applications filed by Gegauf were to be assigned to Singer as set forth in said prior agreement of December 5, 1957.

Whereas, Singer and Gegauf agree that their prior agreements of April 14, 1956 and December 5, 1957 shall continue to the end of their respective normal terms and that the present Agreement will modify the prior agreement of December 5, 1957 only to the extent necessary to carry out the spirit and intention of the present Agreement.

Whereas, Singer and Gegauf believe that the spirit of said prior agreement of December 5, 1957 can be best carried into effect if such agreement is modified as regard to Paragraph (3) thereof.

Now Therefore, in consideration of the premises the [fol. 3750] parties agree as follows:

(1) Paragraph (3) of the said agreement of December 5, 1957 should be and hereby is cancelled in its entirety, which Paragraph (3) reads as follows:

"Singer hereby agrees not to introduce, without the consent of Gegauf, legal proceedings on the basis of the said patents against Pfaff in Germany or Vigorelli in Italy, but only as far as sewing machines manufactured in Pfaff's factory in Kaiserslautern (Germany) or in Vigorelli's factory in Italy are concerned."

(2) The following paragraph should be substituted in the said agreement of December 5, 1957 in place of the original Paragraph (3):

"Singer hereby agrees not to introduce, without the consent of Gegauf, legal proceedings on the basis of the said patents against Vigorelli in Italy, but only as far as sewing machines manufactured in Vigorelli's factory in Italy are concerned."

In Witness Whereof the parties have executed this Agreement in duplicate as of the day and year written above.

The Singer Manufacturing Company by M. L. Waterman, Vice President.

Witness: D. A. Graesser.

Fritz Gegauf A.G. Bernina Naehmaschinenfabrik, by ——, ——.

Witness: ——, ——.

[fol. 3751] Affidavit

I, Fritz Gegauf, chairman of Fritz Gegauf Aktiengesellschaft Bernina-Naemaschinenfabrik, Steckborn, in Steckborn, Canton of Thurgovie, Switzerland, being duly sworn, say and depose that:

1) On the 5th of December 1957 I signed an agreement with Singer Manufacturing Company, of New York, USA. relating to the transfer to Singer of my U.S. patent application Serial No. 358 377 entitled "Zig-Zag Sewing Machines," said transfer including any and all extensions, divisions or reissues. The transfer was duly recorded at the U.S. Patent Office, as well as the transfer to Singer of my U.S. patent application Serial

No. 700 079, filed on the 2nd of December 1957 as a division of application Serial No. 358 377.

2) In said agreement there was introduced, under paragraph 3 and at my request that "Singer hereby agrees not to introduce, without the consent of Gegauf, legal proceedings on the basis of the said patents against Pfaff in Germany or Vigorelli in Italy but only as far as sewing machines manufactured in Pfaff's factory in Kaiserlautern (Germany) or in Vigorelli's factory in Italy are concerned." The sole reason for provision in favor of Pfaff, was that I have since a long time very friendly personal connections with the directors of Pfaff. I definitely state that I never extended to Pfaff any rights in and to the U.S. Patent No. 2 832 302 and 2 877 726 which derive from the said U.S. applications.

[fols. 3752-3753] 3) on May 5, 1955 I signed an agreement with Phoenix Nähmaschinen A.G. Baer und Rempel, in Bielefeld, Western Germany, relating to a licence in favor of Phoenix for my German patent application No. G 11 654 corresponding to U.S. patent application Serial No. 358 377 and relating to the same invention. I definitely state that I never extended to Phoenix any rights in and to the U.S. patent No. 2 832 302 and 2 877 726 which derive from the said U.S. application.

4) At the request of Singer and for helping them in their fight on the U.S. market, against foreign competitors, I accepted to sign, to-day, a new agreement replacing that of December 5, 1957, and which does not contain any provision in favor of Pfaff, the following paragraph being substituted in the new agreement, in place of the original paragraph 3: "Singer hereby agrees not to introduce without the consent of Gegauf, legal proceedings on the basis of the said patents against Vigorelli in Italy, but only as far as sewing machines manufactured in Vigorelli's factory in Italy are concerned".

Zurich, Switzerland, July 22, 1959.

Fritz Gegauf.

Confederation of Switzerland, Canton and City of Zurich, Consulate General of the United States of America, ss:

Subscribed and sworn to by Fritz Gegauf, before me, a Vice-Consul of the United States of America in and for the consular District of Zurich, Switzerland, duly commissioned and qualified, this 22nd day of July, 1959 A.D.

Service No. 536.
Tariff Item No. 49.
Fee Paid: U.S. $2.50.
Local CY. equiv. Sw. Frs. 11.00.

Robert Lloyd Nelson, Vice Consul of the United States of America at Zurich, Switzerland, duly commissioned and qualified.

[fol. 3754] IN UNITED STATES DISTRICT COURT

GOVERNMENT'S EXHIBIT 141

April 8, 1957.

Mr. M. L. Waterman,
Singer Nähmaschinen Aktiengesellschaft,
Nadelfabrik Würselen,
Kaiserstrasse 106,
Würselen—Aachen, Germany.

Dear Max:

I note from your long cablegram sent from London, and also from talking to Mr. Stewart who has just gotten back, that the Vigorelli people have indicated that they are going to try to carry on on a much reduced scale.

I am not surprised at this. Obviously, they were hopeful that we would think well enough of the machines that they produce so that we would make them some sort of an offer on a "going business" basis. The consensus of opinion seems to be that the facts do not warrant our being interested in making such an offer. I hope that this is a correct viewpoint and that we are not passing up something that we should be

looking at more carefully. Please understand that I am not expressing disagreement with this conclusion, even though my comment may indicate some lingering element of doubt. I confess that I am not sufficiently familiar with the Vigorelli machines to express any opinion myself.

The thing which I am concerned about is patents. The designs which were sent to you to show the work done by the "prototype" were in your office and as far as I can find [fol. 3755] had not been the subject of examination until we got your cablegram asking that they be returned to Italy. Since then, I have seen the designs and they have also been seen by a number of others in the building and Mr. Stanford has given us a copy of the picture and also some of the text that appears in an Italian patent issued to Vigorelli. It seems that this patent goes back to 1953 and I think it is quite probable that some improvements may have been developed and not yet be in any patent papers that are open to the public.

Presumably, this machine would be a rather complicated one to build. Certainly the work produced on it is phenomenal and far beyond anything that has been produced on a 401.

I think that Vigorelli's statements that they hope to continue on a reduced scale means that they hope to continue producing their present machines until such time as somebody pays him a price for what he has to sell. I have no idea as to whether his patent on this new kind of machine is for sale. Furthermore, it has not yet been studied to see how fundamental his concepts may be, but I think that you certainly should give thought to the question of whether we want to acquire his patents and whether they would be obtainable at a price that would be considered reasonable. Possibly the machine is too complicated. Possibly there would not be a market in industry for applying this sort of mechanism in the 107W field, but we both know that for one reason and another, we have tended to be "behind the procession" in the zigzag field and I cannot help but wonder whether we would find ourselves in that position again if [fol. 3756] one of the more aggressive companies were to pick up this Vigorelli idea.

Mr. Miller will be writing you with respect to the return of these samples to Italy and will give you the benefit of the

information from the Patent Department concerning the machine, and I just wanted to add these comments so that you would have them in mind when you visit with Vigorelli in Italy and are exploring the situation and trying to make up your mind as to what should be our next move.

When we last discussed Vigorelli, you explained the opinion that his patents that are involved in the mutual agreement which you were instrumental in negotiating, were not of such a character as to really be of much value to us now that we had our agreement. The question now arises as to whether they may not have other patents such as the one that I have been discussing which would be of value, and which they might be willing to sell to us rather than hold them and hope that they could get something for them when and if they find another manufacturer who will take over their business.

After all, their going business does not have much value over and above machine tool equipment and patents. As matters stand now, we do not know how far either one of these would be of value to us.

Sincerely yours, ——, ——.

cc: Mr. Waterman's office.

[fol. 3757] In United States District Court

Government's Exhibit 142

President's Office Received Apr. 19 1957

M. L. Waterman
149 Broadway
New York 6, N. Y.

Frankfurt April 16.

Dear Milton:—

I wanted to talk with Mr. Stanford before replying to your letter of April 8 concerning Vigorelli. I too would have liked to have had an evaluation of the machinery with some emphasis on the value for uses other than by Monza.—but the feeling in Italy that we should tell him at once we

were not interested as a going business (and I have no quarrel with this view) and his immediate reply that he had decided to carry on rather precluded for the time being such an examination and study. I think that opportunity will probably come up again later. I had surmized he might go next to Rimoldi. Bowmann also suggested this,—but I learn Rimoldi may be also looking for a purchaser, or at any rate, would not be against considering offers for itself. [fol. 3758] The samples received in N.Y. of the machine Vigorelli has referred to looked good. Stanford doubts they were done on a machine made in accordance with the patent that has been mentioned. A machine with needle moving sideways at the direction of cams, with feed moving sideways, and likewise backward and forward would appear to be the last word in complication. Pfaff is in trouble with its machine that lengthens and shortens a pattern at will.

However I have telephoned to Bowmann to sound out Vigorelli to learn if the new machine may be seen by me next week, and I shall then also learn if there are any patents of which we have no knowledge, and also if there seems to be any way we can study the equipment. This latter I will have to inquire about carefully and only if the conversation can be carried on in the proper spirit.

[fol. 3759] I realize full well that what you say about our being behind in the field of zigzag sewing is so. The experience of today with Messerschmitt of which I hope to cable you tomorrow from Munich is ample emphasis of our position. I feel pretty sure it will be favorable, but we have been skating on some pretty thin ice, particularly in this last case.

You may be assured I shall attempt to get the opportunity to evaluate this latest Vigorelli effort and any other patents or applications of which we can learn.

Very sincerely, M.L.W.

[fol. 3760] IN UNITED STATES DISTRICT COURT

GOVERNMENT'S EXHIBIT 143

Oriental Department
Singer Sewing Machine Company
Room 514, Singer Building

Memorandum

December 29, 1959.

Mr. M. L. Waterman

Vigorelli Machine

I have reviewed the evaluation reports which you sent me with your memorandum of December 22. My own feeling is that, while there is some doubt as to the value or salability of a complicated machine of this type in the under-developed countries of the Orient and Latin America, the more sophisticated countries of Europe, the U.S., Australia and perhaps to some extent South Africa, will have to be considered. I presume the principal problem is that of patent rights and from this angle my thinking is that Singer, as the leading sewing machine manufacturer in the world cannot afford to be left behind. I understand that the new Vigorelli mechanism is quite radical and that their patents, when issued, may be of such a nature that we could not develop a similar machine without infringing. If this is correct, it seems to me that regardless of the degree of value to us of these patents at the present time, in order to maintain our traditional leadership in the sewing machine field, it would be advisable to make a deal with Vigorelli, before it is too late.

As Mr. Burchill has a very fundamental knowledge of sewing machines in general as well as very definite ideas on problems of this kind, I asked him to review the evaluation reports and, as of interest to you, I am enclosing a copy of his comments.

A. K. Aurell.

AKA/CC

Copy to: Mr. M. C. Lightner, December 30, 1959.

[fol. 3761] Mr. Aurell

I have read with very great interest the various comments on the new Vigorelli machine, and it would appear to me that as a whole they give the impression that, if the machine is improved from a mechanical point of view, it will be a very serious competitor.

Miss Hutton's comments must be taken separately from the others, as they are the only comments from a thoroughly competent operator and dressmaker—in fact, an outstanding person in both these fields. In my opinion she stresses too much the necessity of perfect stitching in the highly technical dressmaking area, and to my mind this is not too big an area in the whole world-wide sales of Domestic machines. In other words, few of our competitors even attempt to approach us in perfect plain stitching on their plain machines, let alone their zigzags; and for a great many years I have felt that we are inclined to stress this feature which was one of our main selling points when domestic zigzag machines did not exist.

I am not advocating that we reduce our standards in this respect, but rather that we combine the features of first class sewing with extensive adaptability. Many years ago, while in London I asked Research Division to incorporate control of the feed along with control of the needle in zigzag stitching, and my opinion has not changed since then, that this is a basic necessity in Domestic zigzag machines, so that apart from decorative stitching, the zigzag feature can be used to execute automatically useful items such as "briar stitches", buttonholes, etc.

As far as the Technical Comments are concerned:—As I have never inspected the machine in question from a Technical point of view, I must and do accept the comments as being factual. On the whole these comments are pro rather than con and those that fall into the con class, seem to me to be such that they could be reasonably easily overcome by a little technical ingenuity.

Summing up:—I feel that we cannot afford to allow the competition to sweep ahead of us in features which are obviously attractive to the user, and good or excellent selling points, and that most or all of these features should be studied for incorporation in our machines.

H. B.

[fols. 3762-3801] IN UNITED STATES DISTRICT COURT

GOVERNMENT'S EXHIBIT 144

January 4, 1960

Referred to Mr. M. L. Waterman

Your memo of November 25th and the attached reports are extremely interesting. I think that we are in agreement that there has been incorporated in this machine features which we do not have in a 401, and it would have considerable sales appeal. There also seems to be general agreement that the performance of the machine is not what it should be, but that our people could overcome these defects.

The thing that I find to be missing is an analysis of the patent situation; i.e., What is there in the patent area which we can acquire? To state it differently, what can we make a machine do if we acquire the patents that would be secured in a new deal with Vigorelli and that we cannot do under our present patent situation? It seems to me that this is the crux of the problem, because I think we want to explore the possibility of our being in a position to build the maximum sales appeal into a new Singer machine.

M. C. Lightner.

[fol. 3802] IN UNITED STATES DISTRICT COURT

GOVERNMENT'S EXHIBIT 154

Confidential

March 14, 1958.

H. R. Crawford, Esq.
c/o Tokyo, Japan

Dear Mr. Crawford:

I enclose herewith a copy of a letter which Mr. Waterman has written to Mr. Yasui of the Brother Company dated March 11. You will note that the letter constitutes an informal and friendly warning to Brother that their machines infringe certain of our patents and also certain of our patent applications which are expected shortly to

mature into patents. The infringements involve only the sale of Brother machines of the types indicated in the letter in the United States and Canada.

Ordinarily we would not send a warning letter of this kind as there are some legal disadvantages in doing so but in this case the conversation we had with Yasui at luncheon here in New York a couple years ago seemed to me to obligate us to give him informal advice of infringements before we took legal action against any of his companies. I am advised by the Patent Department that they expect the patent applications referred to in the letter to Yasui to mature into issued patents within six or eight weeks. As you know, it is our intention, as soon as these patents are in [fol. 3803] hand, to bring infringement suits against the Brother companies which are distributing infringing machines in the United States unless in the meantime the sale of the infringing machines has been stopped as a result of the warning letter.

Before reaching the decision to proceed aggressively to enforce these patents and before deciding to send the letter to Yasui, we naturally took into account the impact which this would have upon our new effort to obtain validation in Japan. While the effect is difficult to gauge, it was our conclusion that the overwhelming importance of protecting the 401 Machine from infringements by Brother and other infringers made it necessary to subordinate considerations relating to validation in Japan to the larger interest. While one might be inclined to think that the effect in Japan would be harmful, upon reflection I am not convinced that this will be the case. It might rather indicate to the Japanese the present and potential technological power of the Singer Company from which they might conclude that it would be desirable for them to reach some accommodation with us in Japan. While this is all speculative, I am of course anxious that you and Mr. McKinnon and other principal members of the staff in Tokyo as well as Messrs. Young and Holzapfel should be fully informed of this so that all concerned in Japan will be able to deal with any repercussions there. It is highly desirable that this information be kept as confidential as possible and this should be borne in mind in deciding precisely which persons [fol. 3804] should be informed and they should of course

be cautioned against revealing the information to anyone. I do not know whether you and Mr. McKinnon will feel that Japan Steel should be informed. There would be risks in doing so but you can decide this after discussing it with Mr. McKinnon.

Yours very truly, Donald P. Kircher, President.

Enc.

Copy to Mr. J. McKinnon, Mr. A. K. Aurell, Mr. M. L. Waterman, Mr. R. W. Stewart.

[fol. 3805] IN UNITED STATES DISTRICT COURT

GOVERNMENT'S EXHIBIT 155

Memorandum—CAW-K—May 20, 1958

The Brother Select-O-Matic Machine Infringes One or More Claims of the Following Singer-Owned Patents:

1. Gegauf U.S. Pat. No. 2,832,302, Apr. 29, 1958,
2. Harris U.S. Pat. No. Re. 24,370, Oct. 8, 1957.
3. Harris Can. Pat. No. 552,072, Jan. 21, 1958.

The Brother Pacesetter Machine Infringes One or More Claims of the Following Singer-Owned Patents and Patent Application:

1. Gegauf U.S. Pat. No. 2,832,302, Apr. 29, 1958,
2. Harris U.S. Pat. No. Re. 24,370, Oct. 8, 1957,
3. Harris Can. Pat. No. 552,072, Jan. 21, 1958,
4. Peets U.S. Pat. No. 2,617,375, Nov. 11, 1952,
5. A U.S. patent application covering the Singer Class 401 machine, which application will issue as a patent in the very near future.

Mr. M. L. Waterman on May 20, 1958 handed original to M. Yasui at meeting in Mr. Waterman's office.

Copy given to G. M. Brumbaugh May 20, 1958.

[fol. 3806] IN UNITED STATES DISTRICT COURT

GOVERNMENT'S EXHIBIT 156

Air Mail

The Singer Manufacturing Company
Patent Department
Elizabethport F, New Jersey

July 31, 1958.

J. M. McKinnon, Esq.,
Tokyo, Japan.

Dear Mr. McKinnon:

Proposed Patent Infringement Actions in Japan and the United States Based Upon Singer-Owned United States and Japanese Patents.

Thank you for your letter of July 23, 1958, E-407/58, enclosing a copy of your letter of July 23, 1958, E-406/58, to Mr. H. R. Crawford.

You have suggested that it might materially assist you in your efforts on behalf of the Pine Company if we would hold in abeyance, for a few months at least, the prosecution of our proposed United States and Japanese civil suits based upon the infringement by Japanese manufacturers and United States importers of certain Singer-owned Japanese and United States patents. We have reviewed your suggestion with Messrs. Kircher and Waterman and it is the concensus of opinion here that we should proceed with these various proposed patent actions in the following manner.

1. In accordance with your suggestion, the proposed infringement actions in Japan with respect to Brother, Juki and Mitsubishi should not be instituted for the time being.
2. Although further investigation of the imitation Singer Class 231-25 "Feed-off-the-Arm" sewing machines should be continued by your office it is agreed that no action should be taken with respect to the imitators at the present time.

3. As you know, our civil action in the United States against the United States firm of Brother International has been on file for some time. However [fol. 3807] it is not expected that a trial will be had for at least two years. In view of this situation, it is felt that the continued vigorous prosecution of this action will have little or no effect upon the Pine situation in Japan. Therefore, this civil action will be continued.

4. We have for some time been planning to institute in the United States a second infringement suit with respect to an importer and or dealer of infringing Japanese machines. At the present moment it appears that the most likely candidate will be a dealer in Sanshin machines. It appears that it will help our situation in the United States immeasurably to institute this second civil action and since such actions in the United States seldom are set for trial earlier than three or four months after the institution thereof, it would appear that such a second civil action would not materially affect your Pine situation. Thus, we are authorized to proceed with this second action.

5. We have for some time been planning to institute in the United States an action under United States Tariff laws which action would involve many if not all of the United States importers of Japanese zig-zag stitch sewing machines. However, in view of the present Pine situation, the institution of this Tariff action will be held in abeyance at least until the latter part of September. Furthermore, such action will not be begun without again taking cognizance of your Japanese problems.

In your above noted letter to Mr. Crawford, you made mention of the fact that you are in the process of assembling the data which we requested of you in our letter of June 26. Since this data will be employed by us in connection with our pending civil suits, it would be well if we could receive such data as soon as possible. We appreciate, how-

ever, that the development of this data requires a great deal of time and effort on the part of your office.

Yours very truly, The Singer Manufacturing Company, J. G. Stanford, Patent Department.

CC: D. P. Kircher, M. L. Waterman, H. R. Crawford, Oriental Dept.

[fol. 3808] IN UNITED STATES DISTRICT COURT

GOVERNMENT'S EXHIBIT 157

Received Patent Department, December 24, 1958, Answered—.

M. L. Waterman
149 Broadway
New York 6, N.Y.

December 22, 1958.

C. F. Baumann, Esq.,
Milan, Italy.

Dear Mr. Baumann:

We are in the process of bringing an action under the United States Tariff laws, the result of which, if successful, would be to exclude from entry into the United States all automatic zigzag machines of the type similar to the Gegauf, Bernina, Vigorelli, and the Singer Class 401.

In order to properly prosecute this action, it will be necessary for us to tell the United States Tariff Commission about our outstanding licenses under the Gegauf Patent No. 2,832,302 to Gegauf-Bernina and Vigorelli, so that the Gegeuf and Vigorelli machines will not be excluded from being imported into the United States. Also, it will strengthen our case for us to advise the Tariff Commission of the approximate number of automatic zigzag machines exported to the United States by Vigorelli during the past 12 months. We are making this same request of Gegauf-Bernina.

We would be most appreciative if you would ask Dr. Landó to take this matter up promptly with Mr. Vigorelli so that this information might be supplied us at the earliest opportunity.

Very truly yours, M. L. Waterman.

cc: Mr. D. P. Kircher, Mr. J. G. Stanford, not noted on original.

[fol. 3809] In United States District Court

Government's Exhibit 158

Received Patent Department, December 24, 1958, Answered—.

M. L. Waterman
149 Broadway
New York 6, N.Y.

December 22, 1958.

Mr. Fritz Gegauf
Fritz Gegauf A.G.
Bernina Nahmaschinenfabrik
Steckborn, Switzerland

Dear Mr. Gegauf

We are in the process of bringing an action under the United States Tariff laws, the result of which, if successful, would be to exclude from entry into the United States all automatic zigzag machines of the type similar to the Gegauf-Bernina, Vigorelli, and the Singer Class 401.

In order to properly prosecute this action, it will be necessary for us to tell the United States Tariff Commission about our outstanding license under the Gegauf Patent No. 2,832,302 to Gegauf-Bernina and Vigorelli, so that the Gegauf and Vigorelli machines will not be excluded from being imported into the United States. Also, it will strengthen our case for us to advise the Tariff Commission of the approximate number of automatic zigzag machines exported to the United States by Gegauf-

Bernina during the past 12 months. We are making this same request of Vigorelli.

We would be most appreciative if you would supply us, at your earliest opportunity, with this information.

Very truly yours, M. L. Waterman.

cc: Mr. D. P. Kircher, Mr. J. G. Stanford (not noted on original)

[fol. 3810] In United States District Court

Government's Exhibit 159

C. F. Baumann
Via Dante 18-Milano
Telef. 89.77.45

December 30, 1958.

Mr. M. L. Waterman
149 Broadway
New York 6, N.Y.

Dear Mr. Waterman:

We have received your letter of December 22nd with the information about the action you are taking under the United States Tariff laws to prevent the entry into the United States of certain types of automatic zigzag machines. This information was conveyed to Mr. Vigorelli this morning who was quite pleased to hear of your action, with the hope that once it is successful he or Bernina may be able to take parallel action in Italy vis-à-vis the Wilson and Caser zigzag machines.

Mr. Vigorelli was quite happy to supply the figures you ask for, although apologetic about the modest figures themselves. The quantity of automatic Vigorelli zigzag machines exported to the United States totalled 550 in 1957 and 545 in 1958. Following the trouble he had with his U.S. agent two or three years ago his business almost dwindled to nothing and is only slowly picking up again.

Mr. Vigorelli asked to be remembered to you and Mr. Stanford and trusts he will see you again at the 1959

Milan Fair, by which time he hopes to have ready* his new edition of the rather complicated machine that you examined in his office.

Yours very truly, C. F. Baumann.

P.S.—May I take the occasion to thank you for your letter of Dec. 16th enclosing a trade publication pertaining to Italy.

CFB/sr

cc: J. G. Stanford.

Received M.L.M. January 5, 1959.

---

*[fol. 3811] In United States District Court

Government's Exhibit 160

Received M.L.W. January 26, 1959, Answered—.

Fritz Gegauf Limited
Steckborn, Switzerland
Sewing Machine Manufacturers

Steckborn, January 21st, 1959.

Mr. M. L. Waterman
149 Broadway
New York 6, N.Y., U.S.A.

Dear Mr. Waterman:

We refer to your letter of December 22nd, addressed to Mr. Fritz Gegauf senior, and kindly ask you to excuse the delay in answering it, which is due to absence of Mr. Gegauf, who only returned today.

We note that you are prosecuting an action under the United States Tariff laws to exclude from entry to the U.S. all automatic zigzag machines similar to the Gegauf-Bernina, Vigorelli and Singer 401. We wish you the best of success in this action.

---

*and on show

For your convenience we advise that in 1958 a total of 3405 Bernina automatic zigzag sewing machines were exported to the U.S., a small part of it being shipped in January only, due to the fact that because of excessive receipt of orders for delivery in November and December, we could not supply all machines wanted.

We hope to have been of service with above statement, and are looking forward to remain informed about the results of your action.

With kind regards, we remain,

very truly yours, Fritz Gegauf Limited, ——, ——.

Copies Patent and D. H. Kircher.

[fols. 3812-3814] IN UNITED STATES DISTRICT COURT

GOVERNMENT'S EXHIBIT 161

Airmail

January 27, 1959.

Mr. J. M. McKinnon, General Manager
Singer Sewing Machine Company
Tokyo

Dear Sir:-

Tariff Commission Complaint

As you know, the Company had under consideration the filing of a complaint with the Tariff Commission against the import of zigzag sewing machines which infringed your suppliers patents. This complaint has now been made and for your information we attach a copy of the actual complaint. Since being lodged, the complaint has aroused quite a storm of protests by sewing machine importers and dealers, particularly those who import from Japan, and various newspapers have reported on these protests.

There will no doubt be similar repercussions in Japan for, as you will note from the complaint, it is aimed more directly at Japan than at any other country but our position is that it is aimed at anyone and everyone who infringes our patents—and this should be your position. To

assist you in dealing with any inquiries, we attach copy of a prepared statement you may use at your discretion. We would prefer, of course, not to become involved in discussing the pros and cons of this complaint through the medium of newspaper articles but you may consider it advisable to make a statement as it is quite possible there will be a storm of protests in the Japanese press, particularly the sewing machine trade publications, in which our position will be misrepresented. In addition, you will probably be questioned by MITI officials.

To enable you to meet this situation should it arise, we are giving you the complete background to this tariff complaint.

Very truly yours, Singer Sewing Machine Company, ——, ——, Assistant Vice President.

encls:

[fols. 3815-3829] IN UNITED STATES DISTRICT COURT

GOVERNMENT'S EXHIBIT 163

May 2nd, 1935.

Cablegram Received From M. L. Waterman, Sent From Clydebank

Goosman Singer,

New York.

RE YOUR LETTER 8TH 27TH ZIGZAG MACHINE STOP ALTHOUGH HAVING NO BEARING ON DECISION BUILD MULTI-CAM FOR UNITED STATES MUST STATE MY OPINION NEED IN EUROPE IS EQUAL IF NOT MORE IMPORTANT SINCE NEARLY ALL COMPETITORS THERE HAVE THEM AND THOSE NOW WITHOUT WILL HAVE SOON STOP AS FAR AS STANFORD AND I CAN SEE VIGORELLI WILL QUITE SURELY DOMINATE 282 AND 1040 IN MANY EUROPEAN COUNTRIES AND BRAZIL AND WE HAVE NO ASSURANCE THAT OTHERS MAY NOT DO SAME IN UNITED STATES EVEN IF VIGORELLI DOES NOT STOP OUR POSITION TO COMMISSIONER PATENTS TO TAKE SPECIAL PROMPT ACTION ON OUR APPLICATION SHOULD INFORM US WITH WHOM AND AS TO WHAT FEATURES THERE IS INTERFERENCE AND STANFORD INCLINES TO OPINION THAT WITH THE KNOWLEDGE WE WILL THEN HAVE OF OTHERS CLAIMS AND THERE NON KNOWLEDGE OF OURS WE SHOULD NEGOTIATE PROBABLY DIRECTLY IF WITH VIGORELLI AS TO CROSS LICENSING POSSIBILITIES AND PERHAPS WITH ANY OTHER WITH WHOM THERE IS INTERFERENCE STOP WE SHOULD HAVE THIS INFORMATION IN PERHAPS THREE MONTHS AND COULD THEN DELAY ISSUANCE OUR PATENT PERHAPS SIX MONTHS LONGER DURING WHICH INTERVAL WHILE OPPONENTS ARE UNAWARE OF OUR CLAIMS SUCH NEGOTIATIONS WOULD HAVE TO BE COMPLETED STOP I QUESTION IF TESTS BY OUR OWN PEOPLE IN THE UNITED STATES OF THE NEW SEWING MECHANISM OF 282 ARE SUFFICIENT ON WHICH TO BASE THE LARGE TOOL EXPENDITURE AND PERHAPS EVEN FOR BUILDING AS PER STEWARTS MEMO SEVERAL MONTHS AGO TO LIGHTNER UNLESS MACHINE IS SURELY INTENDED FOR U S MARKET ONLY STOP ANY CONSIDERATION INVOLVING EVENTUAL FOREIGN FACTORY 282 MANUFACTURE AND OFFERING MACHINES IN FOREIGN MARKET SUGGEST DESIRABILITY TESTING BEING CARRIED OUT BY EDUCATIONAL DEPARTMENT ABROAD WHERE REQUIREMENTS ALWAYS DIFFER STOP STANFORD SAYS MACHINES CAN BE TESTED ABROAD IF DONE SECRETLY BY OUR PEOPLE STOP OFFER SUGGESTION THAT BEFORE PROCEEDING TOO FAR AND INVOLVING LARGE EXPENDITURES THE SUBJECT OF PATENT STATUS BE DISCUSSED WITH STANFORD ARRIVING NEW YORK 10TH MAY

Waterman.

cc: Mr. M. C. Lightner, Mr. R. W. Stewart, Mr. D. G. Robbins, Mr. D. P. Kircher.

[fol. 3830] IN UNITED STATES DISTRICT COURT

GOVERNMENT'S EXHIBIT 169

Received Patent Department, January 5, 1959, Answered—.

The Singer Manufacturing Co.
Singer Building
149 Broadway
New York 6, N. Y.

Division of Research

In Replying Please Refer to TK:V7

January 2, 1959.

J. G. Stanford, Esq.,
Elizabethport, New Jersey.

Dear Mr. Stanford:

Procedure Under Tariff Act of 1930 (Rule 1337) to Prohibit the Importation into the United States of Zigzag Stitch Sewing Machines which Infringe Singer-Owned Gegauf Patent No. 2,832,302.

We have reviewed the list of foreign manufacturers and exporters and United States importers of machines infringing Singer patents and arrived at, what we think, is a more complete and up-to-date list than that in the present draft of "Complaint of The Singer Manufacturing Company". Subject to your approval, the list would now be made of 21 different United States importing firms, 8 Japanese exporting firms, 17 Japanese manufacturers and 11 European manufacturers of machines infringing Singer patents.

There is no ready evidence in this office proving that all these machines are actually being imported into the United States but "on information and belief"; the firms listed have trade connections with United States importers and distributors and, therefore, potentially they are within the scope of the Complaint. It is common knowledge that the market potential in the United States for automatics, ability and the freedom for foreign-made machines to undersell American-made products and the complete absence of im-

port restrictions in this country were the primary reasons for our competitors to enter into the production of automatics.

As additional background information for the purpose of the Complaint, we would add the following observations:

1. The sewing machine industry in Japan occupies the third position as dollar-earner after shipbuilding and electrical machinery and is actively supported by the Japanese government. Two Ministries, the MITI and the Ministry of Light Machinery, have special [fol. 3831] "divisions of sewing machines" with the function of controlling and promoting the production and export of sewing machines, conducting research and development of machines and methods of production. Published history of the Japanese sewing machine industry is quite frank in admitting that it was developed through the copying of foreign-made machines and that a continuous study of foreign designs is being made in order, as they claim, to learn the techniques of design and production and to meet the quality standards. In 1956, for example, the Technical Committee of the Sewing Machine Industry Association had undertaken the study of Adler, Pfaff, Necchi and Singer machines (Singer zigzag 206K20 and straight stitching 201K1). Soon after the study had been completed, the Japanese industry entered into the production of zigzags on a large scale with the machines having features copied from the sample designs. It is feasible that this practice has been repeated when late in 1957 and through 1958, the Japanese entered the production of automatics with Singer 401A, Pfaff, Necchi and Borletti automatics serving as models. It appears, therefore, that infringing of foreign patents and the consequent "unfair competition" is inherent with the Japanese industrial design and the Japanese government is fully aware of the fact.
2. It can be expected that, during the hearings, an argument will be raised against import restrictions pointing to the fact that Japan had already introduced preventive measures, in the form of check prices and quotas, against possible "unfair competi-

tion" effects of Japanese machines in foreign markets. The weakness of such argument is apparent in the fact that there is no quota system for zigzag machines and, although there are check prices for zigzag machines, Japanese themselves do not consider it an adequate or effective measure. The trade publications are full of criticism of the check price systems pointing out that zigzag machines are, in fact, exported below the minimum check price. This issue became so important that both MITI and the Ministry of Light Machinery are submitting a new law to the Diet that would employ stronger measures against "design piracy" and other unfair practices of Japanese manufacturers and exporters.

3. Assuming that the Complaint would result in Presidential order excluding the entry of competitive automatics into the United States, it can be expected that Japanese will try to get around such an order by shipping separately the pattern selecting mechanism and the machine heads. In such a case, the [fol. 3832] machine would clear customs as a non-automatic and the unit would later be incorporated into the head by United States importers. Such practice is already being used for the purpose of avoiding paying the higher check prices for automatics. The machines are imported here as semi-zigzag machines and the automatic device is later on assembled into them by the United States importers.

4. As further background information, we enclose the "NKB Research Monthly" published by The Nippon Kangyo Bank, Ltd., presenting a review of the sewing machine industry in Japan.

Very truly yours, The Singer Manufacturing Co.,

T. Krzyzanlak.

Enclosure.

Letter in triplicate.

CC: Mr. M. L. Waterman.

United States Patent Office

Re. 24,370
Reissued Oct. 8, 1957

24,370

EMBROIDERING MECHANISM FOR ZIGZAG SEWING MACHINES

Carl Harris, Montreal, Quebec, Canada, assignor to The Singer Manufacturing Company, Elizabethport, N. J.

Original No. 2,693,778, dated November 9, 1954, Serial No. 292,468, June 9, 1952. Application for reissue June 16, 1955, Serial No. 516,858

7 Claims. (Cl. 112—158)

Matter enclosed in heavy brackets [ ] appears in the original patent but forms no part of this reissue specification; matter printed in italics indicates the additions made by reissue.

This invention relates to sewing machines and more particularly to an embroidering mechanism for sewing machines of the zigzag type.

Zigzag sewing machines are well known in the art and many attachments for such machines have been heretofore proposed to simplify and augment the production thereby of ornamental designs and stitches. In general, however, such attachments require skilled attention on the part of the operator and they are subject to a very limited range of designs.

An object of the present invention is to provide an embroidering mechanism for zigzag sewing machines which is simple and inexpensive to manufacture, which may be readily mounted on existing machines, which is capable of producing a very wide variety of designs with minor and convenient adjustment of the mechanism, and which substantially reduces the skilled attention required by the operator.

The invention will be described with reference to the accompanying drawing in which:

Figure 1 is a side elevation of a machine embodying the mechanism of the present invention,

Figure 2 is an elevation of the other side of the machine,

Figure 3 is an end elevation, partly in section,

Figure 4 is an end elevation,

Figure 5 is a plan view of one form of design applied to a fabric, and

Figure 6 is a plan view of another form of design.

The sewing machine illustrated is of the usual zigzag type and comprises conventional elements including a main frame having a work-supporting bed-plate 1, on one end of which is mounted the tubular standard 2 having an arm 3 overhanging the bed-plate 1. The head 4 is carried by the free end of the arm 3. The needle-reciprocating shaft 5 is journalled in the arm 3 and extends longitudinally thereof. A needle bar 6 carrying a needle 7 is mounted in the head 4 and is connected to the shaft 5 for reciprocation thereby by usual means, not shown. The needle-bar 6 is journalled in a frame 8 which is pivotally mounted on pin 9 in head 4 for lateral swinging movement. Such movement is imparted to the frame 8 and needle-bar 6 by means of a pitman 10 pivoted at one end by screw 11 to frame 8. A split ring 12 mounted on the other end of the pitman embraces an eccentric 13. The eccentric 13 has an enlarged opening 14 therein to receive a transverse shaft 15 journalled in the walls of arm 3. The eccentric 13 is carried by a frame 16 which is adjustably mounted on a disc 17 fixed to the shaft 15. A pin 18 mounted in frame 16 has a rounded end portion extending into an axial bore 19 in shaft 15 and it will be appreciated that adjustment of the frame 16 and consequent adjustment of the eccentricity of eccentric 13 is effected by reciprocation of the pin 18, all in the conventional manner.

The shaft 15 is driven from shaft 5 by means of a gear wheel 20 fixed thereto and a worm gear 21 on shaft 5. Shaft 5 is driven in the usual manner by belt pulley 22 mounted on one end thereof.

In accordance with the invention, means are provided for automatically varying the eccentricity of the eccentric 11 in accordance with a fixed preselected pattern and such means, as shown, comprises a spindle 23 reciprocally mounted in bore 19 and having a conical end portion 24 in engagement with pin 18. Spindle 23 acts upon pin 18 in the same manner as the conventional manually-actuated regulating spindle and moves in one direction to reciprocate the pin 18 outwardly and in the reverse direction to permit the pin 18 to reciprocate inwardly under the influence of the biasing spring 26 in frame 16. However, spindle 23 of the present invention is spring-biased in such reverse direction by means of a spring 25 on the spindle, such spring being located in an enlarged diameter portion 27 of bore 19. Spindle 23 has a rounded head 28 located exteriorly of the arm 3 on the rearward side of the machine.

Means for automatically reciprocating spindle 23 comprises a selected one of a series of cams 29 mounted on shaft 30 journalled in an auxiliary frame which includes bearings 31 suitably supported in a fixed relation on the main frame of the machine. The cams 29 are keyed to the shaft for longitudinal adjustment therealong by means of the keyway 32 and may be locked in desired position on the shaft by set screws 33 or the like. Each cam 29 comprises a plate of predetermined shape, the edge of which constitutes the cam surface. In operation, a preselected one of said cams is locked in position on the shaft 30 with its edge in engagement with *a cam follower in the form of* the rounded end of spindle 23, which is urged against the cam surface by the spring 25. It will be observed that, on rotation of the cam, the spindle 23 will be subjected to a succession of cycles of reciprocating movements of desired amplitude depending upon the shape of the cam. As will follow from the foregoing description, such movements will result in corresponding variations in the eccentricity of the eccentric 13.

Means for driving the cam shaft 30 at a suitable speed comprises a shaft extension 34 on the end of shaft 5, a worm gear 35 fixed to shaft extension 34, a gear wheel 36 meshing with gear 35 and fixed to a vertically disposed shaft 37 mounted in bearings 38 and 39 carried by bearing brackets 40 and 41 mounted on the standard 2, a worm gear 42 fixed to shaft 37, and a gear wheel 43 fixed to shaft 30. It will be apparent that the ratio of gears 35, 36, 42 and 43 may be chosen to provide a desired speed of rotation of cam shaft 30. It will be apparent that cam shaft 30 must rotate very slowly and at a very much lower speed than that of shaft 5. While this speed ratio may vary considerably, a satisfactory ratio is one which will result in one revolution of a cam 29 for each 450 reciprocations of the needle, i. e., for each 450 penetrations of the material by the needle. This ratio may, however, vary from 250 to 750 reciprocations to one cam revolution depending upon the shape and length of design desired. The gear 43 shown has 38 teeth and a diameter of 3½ inches. The number of teeth on gear 43 may of course vary considerably and a range of 24–60 teeth may be mentioned by way of example. The gear 36 shown has 19 teeth and a diameter of 1¾ inches. The number of teeth on gear 36 may likewise vary considerably and a range of 15–19 teeth is mentioned by way of example.

Means may be provided for holding spindle 23 out of cam-engaging position during positioning of the selected cam for operating movement. This means may comprise a rod 44 reciprocatingly mounted in arm 3 and having a

depending end portion 45 for engagement with an annular shoulder 46 on spindle 23. *An operator-influenced* knob 47 on the other end of rod 44 is provided for imparting reciprocating movement to the rod.

The machine is provided with the usual loop-taker and feed dog mechanism, not shown.

In operation, the lines or paths along which an ornamental design is desired to be formed are marked on a piece of fabric as indicated at 48. Thereafter, the operator, having selected a cam corresponding to a desired pattern and locked it in operating position, operates the machine in the usual manner while, however, merely guiding the work along the indicated lines. The automatic variations in the eccentricity of the eccentric 13 will cause the formation of embroidered designs as indicated, design 49 in Figure 6 being produced by the action of one cam and design 50 in Figure 7 being produced by the action of another cam. Thus, no special skill is required on the part of the operator in the formation of the designs.

Various changes may be made in the structure described without departing from the spirit of the invention as defined in the appended claims. For instance, the cams 29 and camshaft 30 may be mounted on the front of the machine instead of on the back, as shown. In the latter event, the shaft 15, spindle 23, and associated parts will be mounted in reverse position in arm 3. As will be apparent from Figure 3, such reverse mounting will permit use of a shorter spindle 23.

What is claimed is:

1. In combination with a sewing machine having a main frame, a needle bar, a driven needle bar-reciprocating shaft, a rotary needle bar-vibrating eccentric, and a spindle reciprocally mounted in the frame for adjusting the eccentricity of said eccentric, an embroidering mechanism comprising an auxiliary frame mounted on the main frame, a shaft mounted in the auxiliary frame in substantially right angular relation to said spindle, a cam mounted on said shaft and having a cam edge surface, said spindle having a free end projecting laterally of said main frame, said free end being engageable with said cam surface, a spring engaging said spindle and urging it into engagement with said cam surface, and a chain of gears mounted in said auxiliary frame and positively and constantly drivably connecting said needle bar-reciprocating shaft and said cam shaft to drive said cam shaft in response to every rotative movement of said needle-bar reciprocating shaft, said spindle being thereby subject to substantially constant reciprocating movement in response to all rotative movement of said needle bar-reciprocating shaft.

2. An embroidering mechanism as defined in claim 1, said chain of gears comprising a speed reduction gear means driving said cam shaft at a ratio of one revolution of said cam to at least 250 reciprocations of said needle bar.

3. An embroidering mechanism as defined in claim 1, said needle bar-reciprocating shaft having an extension on one end thereof, said chain of gears comprising a worm gear fixed to said extension and drivable with said needle bar-reciprocating shaft, a shaft mounted in said auxiliary frame in right angular relation to said needle bar-reciprocating shaft, a gear on said right angular shaft meshing with said worm gear, a worm gear fixed to said right angular shaft, and a gear on said cam shaft meshing with said second worm gear, said second gear being of greater diameter than said first gear.

4. In combination with a sewing machine having a main frame, a needle bar, a driven needle bar-reciprocating shaft, a rotary needle bar-vibrating eccentric, and a spindle reciprocally mounted in the frame for adjusting the eccentricity of said eccentric, an embroidering mechanism comprising a spring engaging said spindle and urging the latter laterally outwardly from said frame, said spindle having a free end projecting laterally of said frame, an auxiliary frame mounted on the main frame, a shaft journalled in said auxiliary frame in right angular relation to said spindle, a cam fixed to said last-mentioned shaft and having a cam edge surface engaging said free end of the spindle, and gear means in positive and constant driving connection with said last-mentioned shaft and said needle-bar reciprocating shaft to drive said cam continuously during all rotative movements of said needle-bar reciprocating shaft thereby to impart substantially constant reciprocating movement to said spindle.

5. An ornamental stitch sewing machine for selectively producing a plurality of different stitch patterns and comprising, a hollow frame, a needle pivotally carried by said frame and mounted for endwise reciprocation and for lateral swinging movements, a rotary shaft mounted in said frame for reciprocating said needle, means for rotating said shaft, a series of rotary cams having different stitch patterns carried by said frame mounted for rotation about a common axis and shiftable lengthwise of said axis, means connected with said shaft for rotating said cams about said common axis, a cam follower, means mounting said cam follower in said frame for movement radially of said common axis, said follower having a single cam-engaging head with its one end engaging and responding to the surface of a cam of said series, means enabling a selected cam to be engaged by said single cam-engaging head, spring means normally urging said single cam-engaging head into engagement with said selected cam surface, means releasably locking said cam-engaging head and said selected cam surface against movement relative to each other lengthwise of said common cam axis during the normal operation of the machine, a manually operable member carried within said frame and having a portion positioned adjacent to and movable with said cam follower for withdrawing said cam-engaging head from and radially of said selected cam surface, a handle formed on said member and extending outside the confines of said frame, means enabling a selected cam of said series to be shifted lengthwise of said common axis and disposed in operative engagement with said single cam-engaging head after said cam follower has been withdrawn radially from a selected cam thereby to effect a partial or a complete traverse of said series of rotary cams whereby the single cam-engaging head can be manually engaged with one cam after the other in any desired sequence, and a pitman having one end connected with said needle at a point spaced from the pivot and its other end operatively connected with the other end of said single cam-engaging head thereby to impart lateral swinging movement to said needle in response to the surface of said selected cam.

6. An ornamental stitch sewing machine for selectively producing a plurality of different stitch patterns and comprising, a hollow frame, a needle pivotally carried by said frame and mounted for endwise reciprocation and for lateral swinging movements, a rotary shaft mounted in said frame for reciprocating said needle, means for rotating said shaft, means including a constantly rotatable eccentric for imparting swinging movements to said needle driven by said rotating means, a series of rotary cams having different stitch patterns carried by said frame and mounted about a common axis, means connected with said shaft for rotating said cams about said common axis, a cam follower, means mounting said cam follower in said frame for movement radially of said common axis, said follower having a single cam-engaging head with its one end engaging and responding to the surface of a cam of said series, means enabling a selected cam to be engaged by said single cam-engaging head, spring means normally urging said single cam-engaging head into engagement with said selected cam surface, means releasably locking said cam-engaging head and said selected cam surface against movement relative to each other lengthwise of said common cam axis during the normal operation of the machine, a manually operable member carried within said frame and having a portion

positioned adjacent to and movable with said cam follower for withdrawing said cam-engaging head from and radially of said selected cam surface, a handle formed on said member and extending outside the confines of said frame, said series of cams and said single cam-engaging head being relatively shiftable lengthwise of the common cam axis after said cam follower has been withdrawn radially from a selected cam thereby to effect a partial or a complete traverse of said series of rotary cams whereby the single cam-engaging head can be manually engaged with one cam after the other in any desired sequence, and means operatively connecting the other end of said cam-engaging head with said needle swinging means whereby the patterns of lateral swinging movements imparted to said needle by said rotating eccentric are automatically varied.

7. An ornamental stitch sewing machine for selectively producing a plurality of different stitch patterns and comprising a hollow frame, a needle pivotally carried by the frame and mounted for endwise reciprocation and for lateral swinging movements, a first rotary shaft mounted horizontally in the frame for reciprocating the needle, means for rotating the shaft, a second shaft carried vertically by the frame, gears connecting the first and second shafts whereby the second is driven by the first, a third shaft carried by the frame in parallelism with and at a location below the first shaft, gears connecting the second and third shafts whereby the third is driven by the second, a series of rotary cams having different stitch patterns carried by and rotatable with the third shaft, a cam follower, means mounting the cam follower in the frame at a location beneath the first shaft for movement radially of the third shaft, said follower having a single cam-engaging head with its one end engaging and responding to the surface of a cam of the series, means enabling a selected cam to be engaged by the single cam-engaging head, spring means normally urging the single cam-engaging head into engagement with the selected cam surface, means releasably locking said cam-engaging head and said selected cam surface against movement relative

to each other lengthwise of the third shaft during the normal operation of the machine, manually operable means disposed adjacent to and movable with the cam follower for withdrawing the cam-engaging head from and radially of a selected cam surface, said last mentioned means including a horizontal rod reciprocatingly mounted in the frame with a portion thereof extending outside the confines of the frame and with a knob provided upon the exposed end of the rod for imparting reciprocating movements thereto, said series of cams and said single cam-engaging head being relatively shiftable lengthwise of the third shaft after the cam follower has been withdrawn radially from a selected cam thereby to effect a partial or a complete traverse of the series of rotary cams whereby the single cam-engaging head can be manually engaged with one cam after the other in any desired sequence, and a pitman having one end connected with the needle at a point spaced from the pivot and its other end operatively connected with the other end of the single cam-engaging head thereby to impart lateral swinging movement to the needle in response to the surface of the selected cam.

References Cited in the file of this patent or the original patent

UNITED STATES PATENTS

1,020,089	Gray	Mar. 12, 1912
1,033,721	Miller	July 23, 1912
1,105,354	Laula	July 28, 1914
1,551,453	Aronson et al.	Aug. 25, 1925
2,005,070	Bitzer	June 18, 1935
2,005,673	Eames	June 18, 1935
2,089,551	Hand	Aug. 10, 1937
2,377,777	Hale	June 5, 1945
2,500,211	Sigoda	Mar. 14, 1950
2,517,079	Birdsall	Aug. 1, 1950
2,682,845	Casas Robert et al.	July 6, 1954

FOREIGN PATENTS

19,184	Great Britain	1908

Oct. 8, 1957 C. HARRIS Re. 24,370

EMBROIDERING MECHANISM FOR ZIGZAG SEWING MACHINES

Original Filed June 9, 1952 4 Sheets-Sheet 1

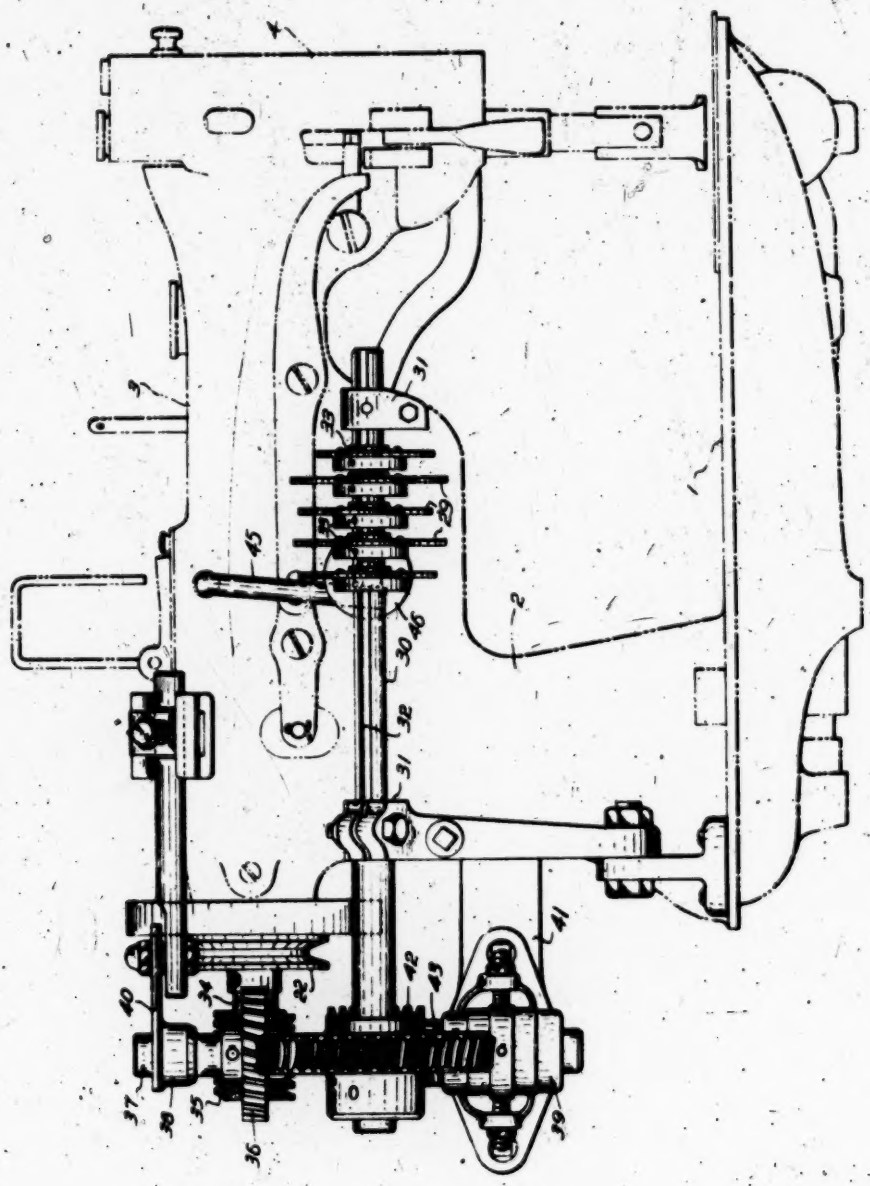

Fig. 1

INVENTOR.
Carl Harris
BY Alex E. Macdae
Attorney

Oct. 8, 1957 C. HARRIS Re. 24,370

EMBROIDERING MECHANISM FOR ZIGZAG SEWING MACHINES

Original Filed June 9, 1952 4 Sheets-Sheet 2

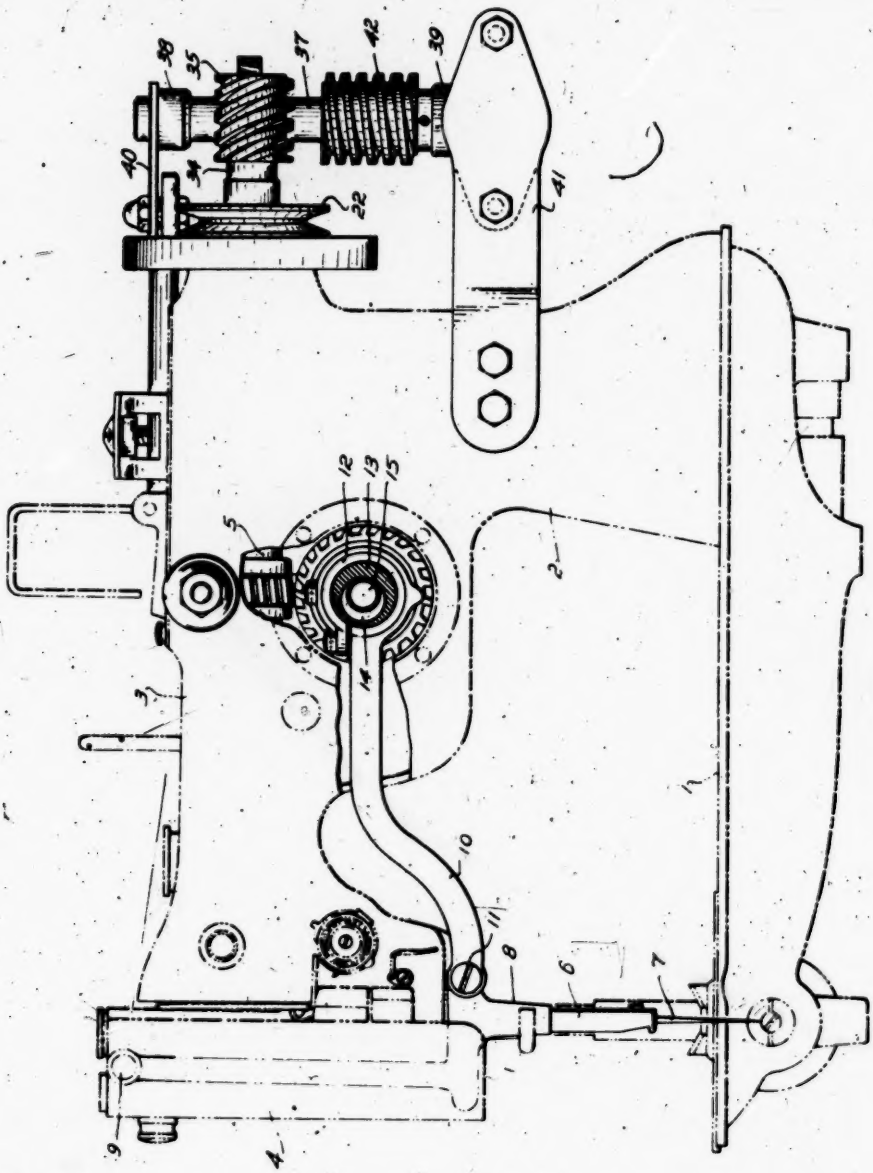

Fig. 2

INVENTOR.
Carl Harris
BY
Alex E. MacRae
Attorney

Oct. 8, 1957 C. HARRIS Re. 24,370

EMBROIDERING MECHANISM FOR ZIGZAG SEWING MACHINES

Original Filed June 9, 1952 4 Sheets-Sheet 3

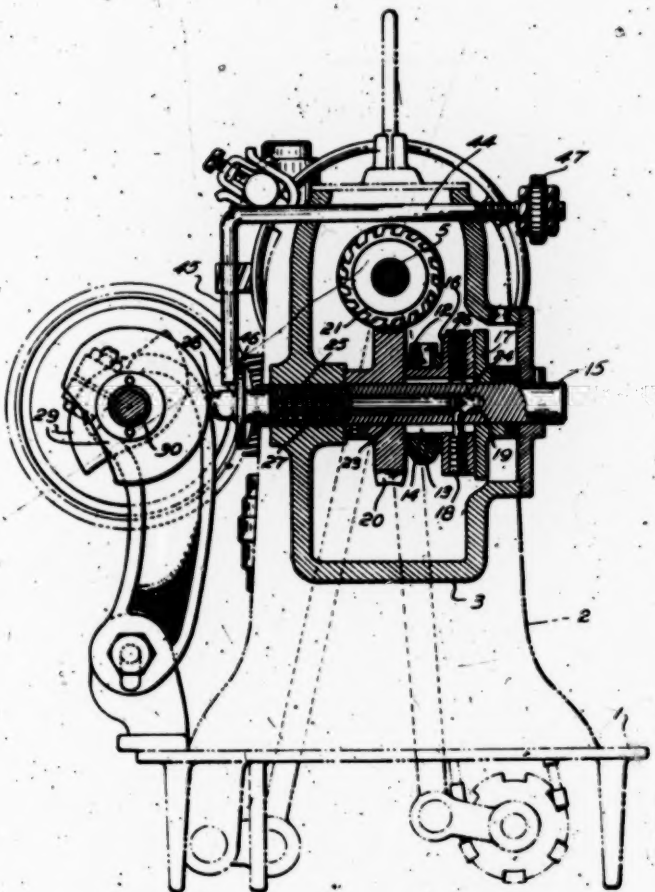

Fig. 3

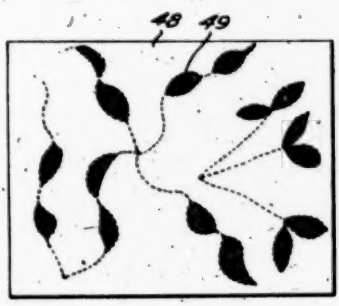

Fig. 6

INVENTOR.
Carl Harris

BY
Alex E. MacRae
Attorney

Oct. 8, 1957 C. HARRIS Re. 24,370

EMBROIDERING MECHANISM FOR ZIGZAG SEWING MACHINES

Original Filed June 9, 1952 4 Sheets-Sheet 4

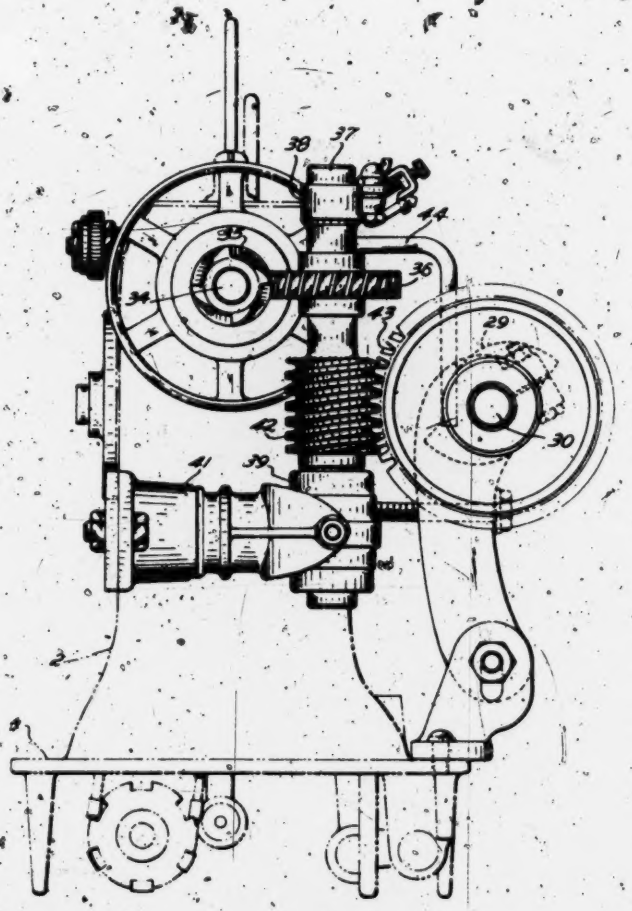

Fig. 4

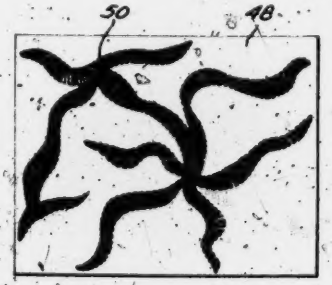

Fig. 5

INVENTOR.
Carl Harris
BY
Alex G. Reedal
Attorney

[fol. 3945] IN UNITED STATES DISTRICT COURT

GOVERNMENT'S EXHIBIT 173

IN THE UNITED STATES PATENT OFFICE

Division 24

December 15, 1955.

In re Application of Carl Harris

Serial No.: 516,058
Filed: June 16, 1955
For: Embroidering Mechanism Zigzag Sewing Machines

Hon. Commissioner of Patents, Washington 25, D. C.

SIR:

In response to the Office Action of November 25, 1955, please amend the above-identified application as follows:

In the Claims:

Rewrite claims 13, 14 and 15 as follows:

19. A sewing machine comprising, a frame, a needle pivotally carried by said frame and mounted for endwise reciprocation and for lateral swinging movements, a rotary shaft mounted in said frame for reciprocating said needle, means for rotating said shaft, a series of rotary cams carried by said frame and mounted about a common axis, means connected with said shaft for rotating said cams about said common axis, a cam follower mounted in said frame having a single cam-engaging head for engaging and responding to the surface of a cam of said series, means enabling a selected cam to be engaged by said cam-engaging head, said series of cams and said single cam-engaging head being relatively shiftable lengthwise of the common cam axis thereby to effect a complete traverse of said [fol. 3946] series of rotary cams, means normally urging said cam-engaging head into engagement with said selected cam surface, means engagable with said cam follower for

withdrawing said cam-engaging head from said selected cam surface, and a pitman having one end connected with said needle at a point spaced from the pivot and its other end operatively connected with said cam follower thereby to impart lateral swinging movement to said needle in response to the surface of said selected cam.—

Rewrite claim 16 as follows:

20. A sewing machine comprising a frame, a needle pivotally carried by said frame and mounted for endwise reciprocation and for lateral swinging movements, a rotary shaft mounted in said frame for reciprocating said needle, means for rotating said shaft, a series of rotary cams carried by said frame mounted for rotation about a common axis and shiftable lengthwise of said axis, means connected with said shaft for rotating said cams about said common axis, a cam follower mounted in said frame having a single cam-engaging head for engaging and responding to the surface of a cam of said series, means enabling a selected cam of said series to be shifted lengthwise of said common axis and disposed in operative engagement with said cam-engaging head, means normally urging said cam-engaging head into engagement with said selected cam surface, means engageable with said cam follower for withdrawing said cam-engaging head from said selected cam surface, and a pitman having one end connected with said needle at a point spaced from the pivot and its other end operatively connected with said cam follower thereby to impart lateral swinging movement to said needle in response to the surface of said selected cam.—

Rewrite claims 17 and 18 as follows:

[fol. 3947] 21. A sewing machine comprising a frame, a needle pivotally carried by said frame and mounted for endwise reciprocation and for lateral swinging movements, a shaft rotably mounted in said frame for reciprocating said needle, means for rotating said shaft; means including a constantly rotable eccentric for imparting swinging movements to said needle driven by said rotating means, a series of differently shaped rotary cams carried by said frame for rotation about a common axis, means driven by said shaft for rotating said cams about said common axis,

a cam follower mounted in said frame having a single cam-engaging head for engaging and responding to the surface of a cam of said series, means enabling a selected cam to be engaged by said cam-engaging head, said series of cams and said single cam-engaging head being relatively shiftable lengthwise of the common cam axis thereby to effect a complete traverse of said series of rotary cams, means normally urging said cam-engaging head into engagement with said selected cam surface, means engageable with said cam follower for withdrawing said cam-engaging head from said selected cam surface, said cam follower being operatively connected with said needle swinging means whereby the patterns of lateral swinging movements imparted to said needle by said rotating eccentric are automatically varied.—

Remarks

Applicant's attorneys wish to express their appreciation to the Examiner and Acting Primary Examiner for the courtesies extended to them during their recent interview.

Reconsideration of the claims now in the application is respectfully requested. Claims 13 to 18, inclusive, have been rewritten as claims 19 to 21, inclusive.

Claims 13, 14 and 15 were rejected as lacking invention over Magowan in view of Bitzer. As was pointed out during the interview, neither Magowan nor Bitzer teache the proper combination of the references in the manner [fol. 3948] proposed by the Examiner in his rejection. Magowan does not disclose a cam-engaging head shiftable lengthwise of a series of cams so as to completely traverse the entire series and engageable with the surface of a selected cam. Further, the Magowan devise merely provides for the shifting of two cam-engaging heads so that one of the heads engages with its corresponding cam surface. There is no teaching whatsoever in Magowan of withdrawing either of the cam-engaging heads from the surface of the cam. The Bitzer device is non-analogous art since it relates to a lace attachment for full fashioned knitting machines. While in Fig. 5, Bitzer discloses a plurality of cams and a cam follower, the patentee is not concerned with the problem of imparting lateral swinging movements to a needle of a sewing machine. In combining the Magowan

and Bitzer references, the Examiner has attempted to follow applicant's teaching.

Van Tuyl et al 2,590,907 is hereby made of record, in view of the fact that it was discussed during the above-noted interview. Although the reference discloses a sewing machine having embodied therein a plurality of cams and a cam follower, it fails as a reference since the cams are used in conjunction with the thread-handling mechanism of the machine. There is no teaching in the reference of how such cams and cam follower can be combined with the needle swinging mechanism of the Magowan device to achieve the results tanght by applicant.

The rejection of claim 15 on Magowan in view of Sigoda is now moot since claim 15 is no longer in the case.

Claim 16 was rejected as being fully met by Aronson et al or Casas Robert et al, both of record. Claim 16 has been [fol. 3949] rewritten as new claim 20 which specifically defines a series of rotary cams carried by the frame mounted for rotation along their common axis and shiftable lengthwise of their axis. The cam follower mounted in the frame is defined as having a single cam-engaging head for engaging and responding to the surface of a cam of the series. The claim further defines means enabling a selected cam of said series to be shifted lengthwise of said common axis and disposed in operative engagement with the cam-engaging head. Neither Casas Robert et al or Aronson et al discloses a series of cams shiftable lengthwise along a common axis so as to be disposed in operative engagement with the cam-engaging head of the follower. Thus neither of these two references teaches the disclosure of Harris.

Claims 17 and 18 were rejected over Magowan in view of Sigoda. These claims have been rewritten as new claim 21. In combining the references, it is believed that the Examiner has merely followed the teaching of applicant. Claim 21 defines "means including a constantly rotatable eccentric for imparting swinging movement to said needle driven by said rotating means, . . .". Magowan does not disclose any such means for imparting swinging movement to his needle. Magowan's needle responds directly to the surface of the cam and this intelligence is not communicated to any means including a constantly rotating eccentric.

Sigoda does not teach the placing of a series of differently shaped rotary cams on a sewing machine frame for rotation about a common axis with means for selecting any one of the sams to be engaged by the cam follower which is operatively connected to the needle swinging means. Even by combining the Magowan and Sigoda references, the Examiner has to make further modifications, following the [fols. 3950-3953] the teaching of applicant, before the device of claim 21 can be met.

It is respectfully submitted that the claims as now presented are in condition for allowance and such action is respectfully requested at the Examiner's earliest convenience.

Respectfully submitted, Carl Harris, By Meade, Browne, Schuyler & Beveridge, Attorneys for Applicant.

December 14, 1955.

[fol. 3954] DEPARTMENT OF COMMERCE

United States Patent Office
Washington

Mailed April 27, 1956, Pat. Div. 24.

Applicant: Carl Harris
Ser. No.: 516,058
Filed: June 16, 1955
For: Embroidering Mechanism for Zigzag Sewing Machines

Joel G. Standford
The Singer Mfg. Co.
Elizabeth F, N. J.

Please find below a communication from the Examiner in charge of this application.

Robert C. Watson, Commissioner of Patents.
Responsive to amendment filed December 15, 1955.
Additional references applied:

Miller	1,033,721	July 23, 1912	112/65
Laula	1,105,354	July 28, 1914	112/2

This application now contains Claims 1-4 inclusive, and 19-21 inclusive.

Upon reconsideration Claim 19 is rejected as being fully met by the patent to Miller, newly cited. Miller discloses a sewing machine comprising a frame 3, a zigzag needle 62, a rotary shaft 4 and means for rotating said shaft, a series of rotary cams 75-77 inclusive, means 7 etc. for rotating said cams about a common axis, a cam follower 68 having a single cam-engaging head, means 88 enabling a selected cam to be engaged, means urging said cam-engaging head into engagement with a selected cam surface, means 90 engageable with said follower for withdrawing said cam-engaging head and a pitman 66 as broadly claimed.

Claim 21 is rejected as lacking invention over Aronson et al in view of Miller, the latter cited above. The patent to Aronson et al discloses a combination sewing machine [fol. 3955] and zigzag attachment substantially as claimed differing only in that Aronson et al varies the lateral swinging movement of the needle by manually interchanging various cams. Miller discloses the expedient of utilizing a series of cams and a shiftable follower for varying the lateral swinging movement of the needle. In view of the above teachings and as broadly recited, to utilize the series of cams and shiftable follower suggested by Miller in lieu of the manually shiftable cams of Aronson et al would not involve invention but mere mechanical skill.

Claim 20 is rejected as lacking invention over Aronson et al in view of Miller taken as applied to Claim 21 and Laula, cited above. In the above formed Aronson et al reference device, whether the follower be shifted and the cams stationary or vice versa would not involve invention but a mere reversal in parts. In this respect note the patent to Laula, Figure 19 which shows the expedient of shifting a series of cams with respect to a follower to be old in the sewing machine art.

Claims 1-4 inclusive are allowable.

Claims 19-21 inclusive are rejected.

Applicant should prepare this application for final disposition.

Thomas J. Hickey, Examiner.

J. Franklin: jmg

[fol. 3956] U. S. Patent Office

Division 24

May 16, 1956.

Application of Carl Harris
Serial No.: 516,058,
Filed: June 16,1955,
Embroidering Mechanism for Zigzag Sewing Machines.

107 Trumbull Street,
Elizabeth F, New Jersey,
May 11, 1956.

The Hon. Commissioner of Patents, Washington, D. C.

SIR:

In response to the Office action of April 27, 1956, please amend the above identified application as follows:
In the Claims:

Rewrite claim 19 as follows:

D

22. An ornamental stitch sewing machine for selectively producing a plurality of different stitch patterns and comprising, a hollow frame, a needle pivotally carried by said frame and mounted for endwise reciprocation and for lateral swinging movements, a rotary shaft mounted in said frame for reciprocating said needle, means for rotating said shaft, a series of rotary cams having different stitch patterns carried by said frame and mounted above a common axis, means connected with said shaft for rotating said cams about said common axis, a cam follower, means mounting said cam follower in said frame for movement radially of said common axis, said follower having a single cam-engaging head with its one end engaging and responding to the surface of a cam of said series, means enabling a selected cam to be engaged by said single cam-engaging head, spring means normally urging said single cam-engaging head into engagement with said selected cam surface, means releasably locking said cam-engaging head and said selected cam surface against movement relative to each other lengthwise of said common cam axis during the normal

[fol. 3957] operation of the machine, a manually operable member carried within said frame and having a portion positioned adjacent to and movable with said cam follower for withdrawing said cam-engaging head from and radially of said selected cam surface, a handle formed on said member and extending outside the confines of said frame, said series of cams and said single cam-engaging head being relatively shiftable lengthwise of the common cam axis after said cam follower has been withdrawn radially from a selected cam thereby to effect a partial or a complete traverse of said series of rotary cams whereby the single cam-engaging head can be manually engaged with one cam after the other in any desired sequence, and a pitman having one end connected with said needle at a point spaced from the pivot and its other end operatively connected with the other end of said single cam-engaging head thereby to impart lateral swinging movement to said needle in response to the surface of said selected cam.

5. An ornamental stitch sewing machine for selectively producing a plurality of different stitch patterns and comprising, a hollow frame, a needle pivotally carried by said frame and mounted for endwise reciprocation and for lateral swinging movements, a rotary shaft mounted in said frame for reciprocating said needle, means for rotating said shaft, a series of rotary cams having different stitch patterns carried by said frame mounted for rotation about a common axis and shiftable lengthwise of said axis, means connected with said shaft for rotating said cams about said common axis, a cam follower, means mounting said cam follower in said frame for movement radially of said common axis, said follower having a single cam-engaging head with its one end engaging and responding to the surface of a cam of said series, means enabling a selected cam to be engaged by said single cam-engaging head, spring means [fol. 3958] normally uring said single cam-engaging head into engagement with said selected cam surface, means releasably locking said cam-engaging head and said selected cam surface against movement relative to each other lengthwise of said common cam axis during the normal operation of the machine, a manually operable member carried within said frame and having a portion positioned adjacent to and movable with said cam follower for with-

drawing said cam-engaging head from and radially of said selected cam surface, a handle formed on said member and extending outside the confines of said frame, means enabling a selected cam of said series to be shifted lengthwise of said common axis and disposed in operative engagement with said single cam-engaging head after said cam follower has been withdrawn radially from a selected cam thereby to effect a partial or a complete traverse of said series of rotary cams whereby the single cam-engaging head can be manually engaged with one cam after the other in any desired sequence, and a pitman having one end connected with said needle at a point spaced from the pivot and its other end operatively connected with the other end of said single cam-engaging head thereby to impart lateral swinging movement to said needle in response to the surface of said selected cam.

6. An ornamental stitch sewing machine for selectively producing a plurality of different stitch patterns and comprising, a hollow frame, a needle pivotally carried by said frame and mounted for endwise reciprocation and for lateral swinging movements, a rotary shaft mounted in said frame for reciprocating said needle, means for rotating said shaft, means including a constantly rotatable eccentric for imparting swinging movements to said needle driven by said rotating means, a series of rotary cams having different stitch patterns carried by said frame and mounted [fol. 3959] about a common axis, means connected with said shaft for rotating said cams about said common axis, a cam follower, means mounting said cam follower in said frame for movement radially of said common axis, said follower having a single cam-engaging head with its one end engaging and responding to the surface of a cam of said series, means enabling a selected cam to be engaged by said single cam-engaging head, spring means normally urging said single cam-engaging head into engagement with said selected cam surface, means releasably locking said cam-engaging head and said selected cam surface against movement relative to each other lengthwise of said common cam axis during the normal operation of the machine, a manually operable member carried within said frame and having a portion positioned adjacent to and movable with said cam follower for withdrawing said cam-engaging head

from and radially of said selected cam surface, a handle formed on said member and extending outside the confines of said frame, said series of cams and said single cam-engaging head being relatively shiftable lengthwise of the common cam axis after said cam follower has been withdrawn radially from a selected cam thereby to effect a partial or a complete traverse of said series of rotary cams whereby the single cam-engaging head can be manually engaged with one cam after the other in any desired sequence, and means operatively connecting the other end of said cam-engaging head with said needle swinging means whereby the patterns of lateral swinging movements imparted to said needle by said rotating eccentric are automatically varied.

Remarks

Add D.

Applicant's attorney wishes to express his appreciation to the Examiner and Acting Primary Examiner for the courtesies extended to him during his recent interviews. [fol. 3960] Reconsideration of the claims now in the application is respectfully requested. Claims 19 to 21, inclusive, have been rewritten as claims 22 to 24, inclusive.

Claim 19 was rejected as being fully met by the patent of Miller No. 1,033,721, and claim 21 was rejected as lacking invention over Aronson *et al.* No. 1,551,453 in view of Miller No. 1,033,721. Claim 20 was rejected as lacking invention over Aronson *et al.* No. 1,551,453 in view of Miller No. 1,033,721 and Laula No. 1,105,354.

As was pointed out during the interviews, Miller does not teach the placing of a series of differently shaped rotary cams on the sewing machine frame for rotation about a common axis with manually operable means for selecting any one of the cams to be engaged by the cam follower which is operatively connected to the needle swinging means. Although Miller does disclose the use of a nest of rotary cams, it is to be appreciated that these cams are tracked and traversed by a follower element 67 which, at all times, is in engagement with the cams and is automatically and positively shifted from one cam to the other in a predetermined sequence by means of a rotary controlling cam 89. Absolutely no means is provided in the Miller mechanism for enabling an operator manually to

select any one cam of the nest of cams for the purpose of performing a predetermined stitch pattern. The several working cams 74, 75 and 76 of the Miller machine are separated by switch cams 77 and 78 which function to shift the follower 67 automatically from one working cam to the other in a predetermined sequence all as automatically goverened by the timing cam 89. Even if manually operable handle means were provided with the Miller follower 67, it is manifest that the operator could not shift the follower to any desired cam for the reason that such shifting would be precluded because of the presence of the [fol. 3961] timing cam 89 and its associated operative lever 82.

From the above, it is manifest that the Miller reference does not anticipate applicant's inventive concept.

As was also pointed out during the interviews the British Magowan patent No. 19,184, of record, could not be properly combined with the Miller reference to anticipate applicant's invention. For example, Magowan does not disclose a cam-engaging head shiftable lengthwise of a series of cams so as completely to traverse the entire cam series and engageable with the surface of a selected cam. Further, the Magowan device merely provides for the shifting of two cam-engaging heads so that one of the heads engages with its corresponding cam surface. There is no teaching whatsoever in Magowan of withdrawing either of the cam-engaging heads from the surface of the cam. From this, it is clear that no combination of the Miller and Magowan references would anticipate applicant's invention without further modification of the resulting hybrid unit.

The Laula reference discloses a button sewing machine having a stack of cams (see Fig. 19) which provide for cam operation of a button-feed disk. There is absolutely no teaching or suggestion in the Laula reference as to how such button-controlling cams could be employed for controlling the swinging of a needle so that an operator could select any cam of the group for the purpose of performing a predetermined stitch pattern. Therefore, the button-controlling cams of the Laula reference cannot be incorporated in the Miller reference without further teachings only found in applicant's invention.

[fol. 3962] The Aronson *et al.* reference merely discloses an embroidery machine having a single cam which is tracked by a cam follower connected with a swinging needle. No teaching is found in the Aronson *et al.* reference which would permit one to modify either the Miller or Magowan devices so as to anticipate applicant's invention.

Claim 22 specifically differentiates from the art of record in that it calls for a manually operable member carried within the sewing machine frame and having a portion positioned adjacent to and movable with the cam follower for withdrawing the cam-engaging head from and radially of a selected cam surface. This claim also calls for a handle formed on the member and extending outside the confines of the frame. Manifestly, such a construction is not disclosed or suggested in any of the prior art references. In counter-distinction to the Miller device, claim 22 further calls for means releasably locking the cam-engaging head and selected cam surface against movement relative to each other lengthwise of the common cam axis during the normal operation of the machine. Clearly, in the Miller machine the follower 67 must be free at all times during the normal operation of the machine to traverse the cam series under guidance of the timing cam 89 so as to perform the avowed purpose of the Miller machine.

Claim 23 differentiates from claim 22 in that it specifically calls for means enabling a selected cam of the series to be shifted lengthwise of the common axis and disposed in operative engagement with the single cam-engaging head.

Claim 24 differs from claims 22 and 23 in that it specifically sets forth that the series of cams are operatively connected with the needle swinging means including a constantly rotatable eccentric whereby the patterns of lateral [fol. 3963] swinging movements imparted to the needle by the eccentric are automatically varied.

It is respectfully submitted that the claims as now presented are in condition for allowance and such action is respectfully requested at the Examiner's convenience.

Respectfully submitted, Chester A. Williams, Jr.,
Attorney.

[fols. 3964-3965] DEPARTMENT OF COMMERCE

United States Patent Office

Washington

Forwarded to Exr. of Interferences from Div. 24

Franklin/md

U. S. Patent Office, August 22, 1956. Mailed.

Applicant: Carl Harris
Ser. No.: 516,058
Filed: June 16, 1955
For: Embroidering Mechanism for Zigzag Sewing Machines

Joel G. Stanford
The Singer Mfg. Co.
Elizabeth F, New Jersey

Please find below a communication from the Examiner in charge of this application.

Robert C. Watson, Commissioner of Patents.

The case referred to above is forwarded to the Examiner of Interferences because it is adjudged to interfere with other cases hereafter specified. The question of priority will be determined in conformity with the Rules of Practice. The interference will be identified as No. 88212.

On or before October 15, 1956, the preliminary statement demanded by Rules 215 et seq. must be filed in a sealed envelope bearing the name of the party filing it and the number and title of the interference. The subject matter involved in the interference is presented in claim 22 of this Reissue application.

Your application, above identified, is a Reissue application of Patent No. 2,693,778, granted No. 9, 1954, on application filed June 9, 1952, No. 292,468.

The interference involves your application and:

An application filed by Fritz Gegauf, whose post-office address is Steckborn, Switzerland, whose attorney is Leon M. Strauss, 535 5th Avenue, New York 17, New York, and whose assignee is Fritz Gegauf Aktiengesellschaft, Bernina-Nahmaschinenfabrik, Steckborn, Switzerland.

The relation of the count of the interference to the claims of the respective parties is as follows:

Count	Gegauf	Harris
1	23	22

After termination of the interference this application will be held subject to further examination under Rule 266.

Thomas J. Hickey, Examiner.

Count compared:

[fol. 3966] U. S. Patent Office

Division 24

June 14, 1957.

Application of Carl Harris

Serial: No. 516,058,
Filed: June 16, 1955, Embroidering Mechanism for Zigzag Sewing Machines.

107 Trumbull Street,
Elizabeth F, N. J.,
June 10, 1957.

The Hon. Commissioner of Patents, Washington, D. C.

Sir:

Supplemental Amendment

This amendment is supplemental to applicant's prior amendment mailed to the United States Patent Office on or about May 11, 1956.

Please amend the above identified application as follows:

Add the following claim:

7. An ornamental stitch sewing machine for selectively producing a plurality of different stitch patterns and comprising a hollow frame, a needle pivotally carried by the frame and mounted for endwise reciprocation and for lateral swinging movements, a first rotary shaft mounted hori-

zontally in the frame for reciprocating the needle, means for rotating the shaft, a second shaft carried vertically by the frame, gears connecting the first and second shafts whereby the second is driven by the first, a third shaft carried by the frame in parallelism with and at a location below the first shaft, gears connecting the second and third shafts whereby the third is driven by the second, a series of rotary cams having different stitch patterns carried by [fol. 3967] and rotatable with the third shaft, a cam follower, means mounting the cam follower in the frame at a location beneath the first shaft for movement radially of the third shaft, said follower having a single cam-engaging head with its one end engaging and responding to the surface of a cam of the series, means enabling a selected cam to be engaged by the single cam-engaging head, spring means normally urging the single cam-engaging head into engagement with the selected cam surface, means releasably locking said cam-engaging head and said selected cam surface against movement relative to each other lengthwise of the third shaft during the normal operation of the machine, manually operable means disposed adjacent to and movable with the cam follower for withdrawing the cam-engaging head from and radially of a selected cam surface, said last mentioned means including a horizontal rod reciprocatingly mounted in the frame with a portion thereof extending outside the confines of the frame and with a knob provided upon the exposed end of the rod for imparting reciprocating movements thereto, said series of cams and said single cam-engaging head being relatively shiftable lengthwise of the third shaft after the cam follower has been withdrawn radially from a selected cam thereby to effect a partial or a complete traverse of the series of rotary cams whereby the single cam-engaging head can be manually engaged with one cam after the other in any desired sequence, and a pitman having one end connected with the needle at a point spaced from the pivot and its other end operatively connected with the other end of the single cam-engaging head thereby to impart lateral swinging movement to the needle in response to the surface of the selected cam.

Cancel claim 22.

Remarks

Claim 22 has been cancelled from this application in [fol. 3968] view of the fact that The Singer Manufacturing Company, as assignee of the entire interest in this application, on or about March 15, 1957 abandoned the single count involved in Interference No. 88,212, which count corresponded to claim 22.

Claim 25 has been added to the application in order more adequately to define and protect applicant's invention. Claim 25 is based upon applicant's cancelled claim 22 but it contains additional subject matter which patentably distinguishes this claim over the subject matter defined in the single count of the above noted interference and over the disclosure contained in the U.S. application of Fritz Gegauf, Serial No. 358,377, filed May 29, 1953, which application was involved in such interference.

More specifically, claim 25 defines applicant's ornamental stitch machine as including a first rotary shaft mounted horizontally in the frame, a second shaft carried vertically by the frame, gears connecting the first and second shafts whereby the second is driven by the first, a third shaft carried by the frame in parallelism with and at a location below the first shaft, gears connecting the second and third shafts whereby the third is driven by the second and a series of rotary cams having different stitch patterns carried by and rotatably with the third shaft. Also, this claim specifically defines the cam follower as being mounted in the frame at a location beneath the first shaft. It is manifest that such a cam actuating construction is not disclosed in the above noted Gegauf application nor in any of the patents of reference.

In addition to the above, the present claim 25 specifically defines applicant's cam follower withdrawing means in a manner which completely differentiates such structure from that shown in the Gegauf application or as shown in the patent references. More specifically, this cam fol- [fols. 3969-3971] lower withdrawing means as defined in claim 25 includes a horizontal rod reciprocatingly mounted in the frame with a portion thereof extending outside the confines of the frame and with a knob provided by the exposed end of the rod for imparting reciprocating movements thereto. It is submitted that applicant's claim 25

patentably distinguishes the subject invention from all of the art of record including the Gegauf application.

Claim 23 distinguishes applicant's invention from the Gegauf structure in that it calls for means enabling a selected cam of the series to be shifted lengthwise of the common cam axis so as to be disposed in operative engagement with the cam-engaging head.

Claim 24 also distinguishes applicant's invention from the Gegauf structure in that it calls for means including a constantly rotatable eccentric for imparting swinging movements to the needle. In addition, this claim calls for a series of cams carried by the frame of which any one of the cams may be adapted for actuating the cam follower, and means operatively connecting the cam follower with the needle-swinging means whereby the patterns of lateral swinging movements imparted to the needle by the rotating eccentric are automatically varied. Clearly no such combination of rotary eccentric and rotary cams is disclosed or suggested in the Gegauf application.

It is believed that all of the claims now remaining in this application define patentable matter over the patented art of record as well as over the structure disclosed in the Gegauf application and thus, the Examiner is respectfully requested to allow each of these claims and to pass this case to issue at an early date.

Respectfully submitted, Chester A. Williams, Jr.,
Attorney.

[fols. 3972-3979] U. S. DEPARTMENT OF COMMERCE

United States Patent Office

Washington

U. S. Patent Office, August 26, 1957, Mailed

Joel G. Stanford
The Singer Mfg. Company
Elizabeth F, New Jersey

Notice of Reissue Allowance

The application for reissue of the patent identified below has been examined and allowed.

Applicant: Carl Harris (Assor.)

Patent Number: 2,693,778

Reissue Filing Date: June 16, 1955

Serial Number: 516,058

Title of Invention or Improvement: Embroidering Mechanism for Zigzag Sewing Machines

Number Claims Allowed in Reissue: 7

The patent will be reissued and forwarded on the date indicated below.

By direction of the Commissioner.

T. J. Hickey, Examiner.

Reissue Date: Patent, October 8, 1957. Will Issue.

[fol. 4088] IN UNITED STATES DISTRICT COURT

GOVERNMENT'S EXHIBIT 175

DEPARTMENT OF COMMERCE

United States Patent Office

Washington

Leon M. Strauss
535 5th Avenue
New York 17, New York

Applicant: Fritz Gegauf
Ser. No.: 358,377
Filed: May 29, 1953
For: Sewing Machine

Jan. 16, 1956

Please find below a communication from the Examiner in charge of this application.

Robert C. Watson, Commissioner of Patents.

Responsive to amendment filed Nov. 2, 1955.

The following claim, found allowable, is suggested for the purpose of interference. Applicant should make same by February 20, 1956 under the provisions of Rule 203; failure to do so will be considered a disclaimer of the subject matter involved:

A sewing machine comprising, a frame, a needle pivotally carried by said frame and mounted for endwise reciprocation and for lateral swinging movements, a rotary shaft mounted in said frame for reciprocating said needle, means for rotating said shaft, a series of rotary cams carried by said frame and mounted about a common axis, means connected with said shaft for rotating said cams about said common axis, a cam follower mounted in said frame having a single cam-engaging head for engaging and responding to the surface of a cam of said series, means enabling a selected cam to be engaged by said cam-engaging head, said series of cams and said single cam-engaging head being relatively shiftable lengthwise of the common

cam axis thereby to effect a complete traverse of said series of rotary cams, means normally urging said cam-engaging head into engagement with said selected cam surface, means engageable with said cam follower for withdrawing said cam-engaging head from said selected cam surface, and a pitman having one end connected with said needle at a point spaced from the pivot and its other end operatively connected with said cam follower thereby to impart lateral swinging movement to said needle in response to the surface of said selected cam.

The time limit for making the claim expires Feb. 20, 1956.

Thomas J. Hickey, Examiner.

JFranklin:md

[fol. 4089] In the United States Patent Office

February 17, 1956.

(#4249)

Applicant: Fritz Gegauf
Ser. No.: 358,377
Filed: May 29, 1953
For: Sewing Machine
Div.: 24

Hon. Commissioner of Patents, Washington 25, D.C.

Sir:

This is in response to Office Communication dated January 16, 1956.

Please add to this case the following claim:

[fols. 4090-4091] 22. A sewing machine comprising, a frame, a needle pivotally carried by said frame and mounted for endwise reciprocation and for lateral swinging movements, a rotary shaft mounted in said frame for reciprocating said needle, means for rotating said shaft, a series of rotary cams carried by said frame and mounted about a common axis, means connected with said shaft for rotating

said cams about said common axis, a cam follower mounted in said frame having a single cam-engaging head for engaging and responding to the surface of a cam of said series, means enabling a selected cam to be engaged by said cam-engaging head, said series of cams and said single cam-engaging head being relatively shiftable lengthwise of the common cam axis thereby to effect a complete traverse of said series of rotary cams, means normally urging said cam-engaging head into engagement with said selected cam surface, means engageable with said cam follower for withdrawing said cam-engaging head from said selected cam surface, and a pitman having one end connected with said needle at a point spaced from the pivot and its other end operatively connected with said cam follower thereby to impart lateral swinging movement to said needle in response to the surface of said selected cam.

[fol. 4092] DEPARTMENT OF COMMERCE

United States Patent Office

Washington

Mailed June 1, 1956, Patent Division 24

Leon M. Strauss
535 5th Avenue
New York 17, New York

Applicant: Fritz Gegauf
Ser. No.: 358,377
Filed: May 29, 1953
For: Sewing Machine

Please find below a communication from the Examiner in charge of this application.

Robert C. Watson, Commissioner of Patents.

Responsive to amendment filed Feb. 16, 1956.

Additional references applied:

Miller	1,033,721	July 23, 1912	112/65
Bitzer	2,005,070	June 18, 1935	112/158 xr
Jenni	2,007,863	July 9, 1935	112/116
Magowan (Br.)	19,184	Sept. 12, 1908	112/158

(2 shts. dwg. 4 pp. spec.)

This application now contains claims 15-22 inclusive.

Claim 23, suggested for the purpose of interference has been renumbered claim 22.

Claim 15 is rejected as being obviously fully met by Magowan, cited above.

Claims 16, 20 and 21 are rejected as lacking invention over Magowan in view of Jenni, both cited above. The patent to Jenni discloses the expedient of providing a sewing machine with a series of cams and shiftable follower 34, 65 etc., Figures 1 and 9 for varying the field of stitching. In view of the above teaching, to modify the shiftable follower *d* of Magowan as suggested by Jenni would not involve invention but mere mechanical skill.

Claim 17 is rejected as lacking invention over Magowan in view of Bitzer. To construct the cam follower of Ma-

gowan as suggested by the follower, Figure 5 of Bitzer would not involve invention but mere mechanical skill. The cut-out portion of lever 43, Figure 5 of Bitzer is considered a slot and applicant has not distinguished therefrom.

[fol. 4093] In view of the newly discovered art, claim 23 (now renumbered claim 22) formerly considered allowable and suggested for the purpose of interference is rejected as being fully met by the patent to Miller, cited above. Miller discloses a sewing machine comprising a frame 3, a zig-zag needle 62, a rotary shaft 4 and means for rotating said shaft, a series of rotary cams 75-77 inclusive, means 7, etc. for rotating said cams about a common axis, a cam follower 68 having a single cam-engaging head, means 88 enabling a selected cam to be engaged, means urging said cam-engaging head into engagement with a selected cam surface, means 90 engageable with said follower for withdrawing said cam-engaging head and a pitman 66 as claimed.

The following claim, found allowable, is suggested for purpose of interference. Applicant should make same by July 2, 1956 under the provisions of Rule 203; failure to do so will be considered a disclaimer of the subject matter involved:

> An ornamental stitch sewing machine for selectively producing a plurality of different stitch patterns and comprising, a hollow frame, a needle pivotally carried by said frame and mounted for endwise reciprocation and for lateral swinging movements, a rotary shaft mounted in said frame for reciprocating said needle, means for rotating said shaft, a series of rotary cams having different stitch patterns carried by said frame and mounted about a common axis, means connected with said shaft for rotating said cams about said common axis, a cam follower, means mounting said cam follower in said frame for movement radially of said common axis, said follower having a single cam-engaging head with its one end engaging and responding to the surface of a cam of said series, means enabling a selected cam to be engaged by said single cam-engaging head, spring means normally urging said single cam-engaging head into engagement with said selected cam surface, means releasably locking said cam-engaging head and said selected cam surface against movement

relative to each other lengthwise of said common cam axis during the normal operation of the machine, a manually operable member carried within said frame and having a portion positioned adjacent to and movable with said cam follower for withdrawing said cam-engaging head from and radially of said selected cam surface, a handle formed on said member and extending [fols. 4094-4218] outside the confines of said frame, said series of cams and said single cam-engaging head being relatively shiftable lengthwise of the common cam axis after said cam follower has been withdrawn radially from a selected cam thereby to effect a partial or a complete traverse of said series of rotary cams whereby the single cam-engaging head can be manually engaged with one cam after the other in any desired sequence, and a pitman having one end connected with said needle at a point spaced from the pivot and its other end operatively connected with the other end of said single cam-engaging head thereby to impart lateral swinging movement to said needle in response to the surface of said selected cam.

In the event applicant makes the above suggested claim in the present application and co-pending application serial number 435,832 he is required to elect which one of the applications shall be placed in interference. Note Rule 78(b).

Claims 18 and 19 are withdrawn from further consideration under Rule 142(b) as not readable on the elected species.

Thomas J. Hickey, Examiner.

JFranklin/md

[fols. 4219-4344] IN UNITED STATES DISTRICT COURT

GOVERNMENT'S EXHIBIT 177-(S-16)

March 17, 1959 F. GEGAUF 2,877,726

ZIG-ZAG SEWING MACHINES

Original Filed May 29, 1953 4 Sheets-Sheet 1

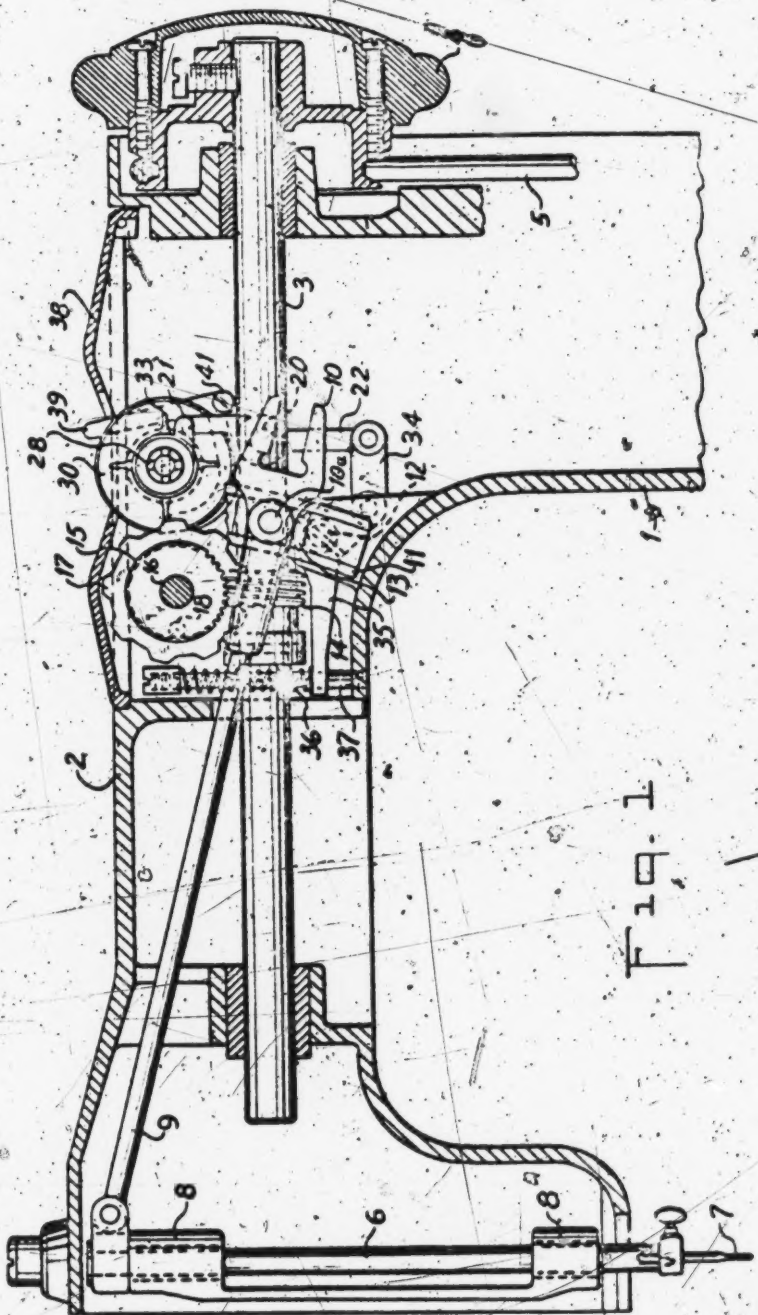

Fig. 1

INVENTOR.
FRITZ GEGAUF
BY Leon M. Strauss

March 17, 1959 F. GEGAUF 2,877,726

ZIG-ZAG SEWING MACHINES

Original Filed May 29, 1953 4 Sheets-Sheet 2

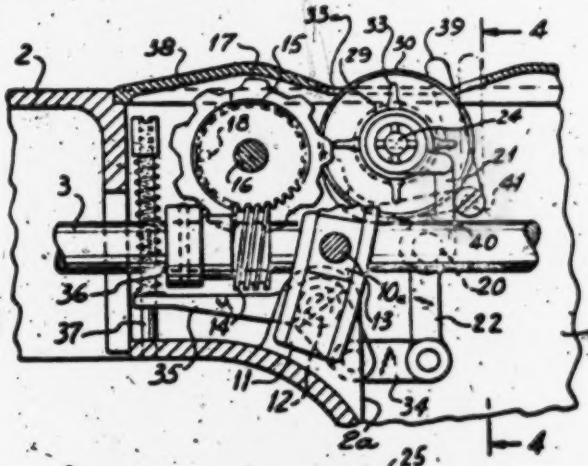

Fig. 2

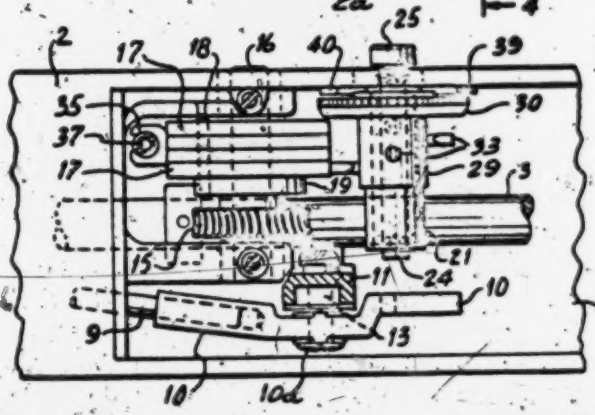

Fig. 3

Fig. 8

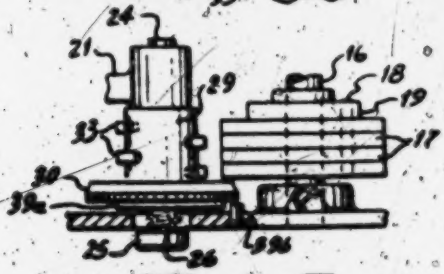

Fig. 9

Fig. 4

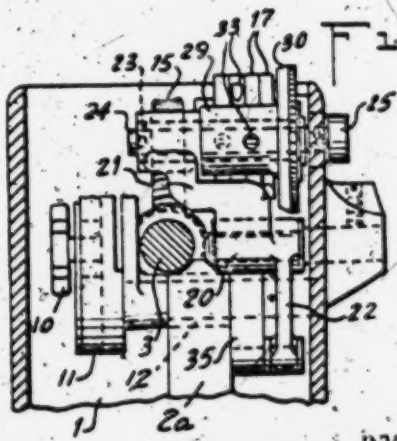

INVENTOR
FRITZ GEGAUF
BY Leon M. Strauss

March 17, 1959 F. GEGAUF 2,877,726

ZIG-ZAG SEWING MACHINES

Original Filed May 29, 1953 4 Sheets-Sheet 3

Fig. 5

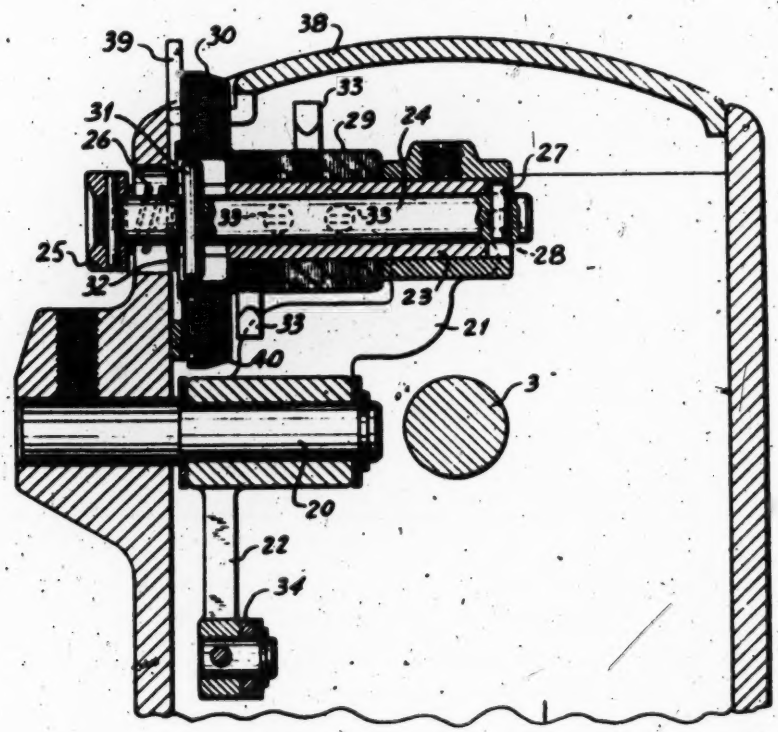

Fig. 6

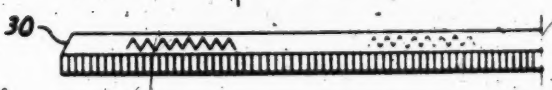

Fig. 7

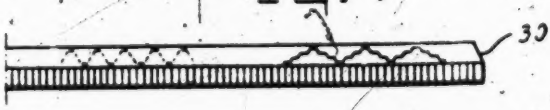

INVENTOR
FRITZ GEGAUF
BY Leon M. Strauss
ATT.

March 17, 1959 F. GEGAUF 2,877,726

ZIG-ZAG SEWING MACHINES

Original Filed May 29, 1953 4 Sheets-Sheet 4

Fig. 10

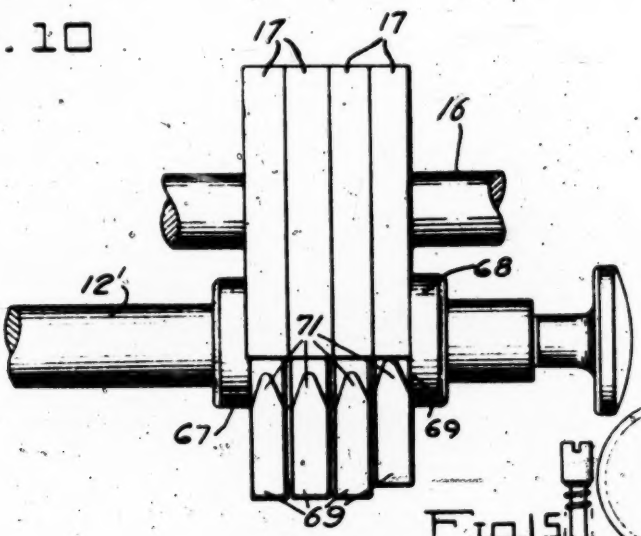

Fig. 15

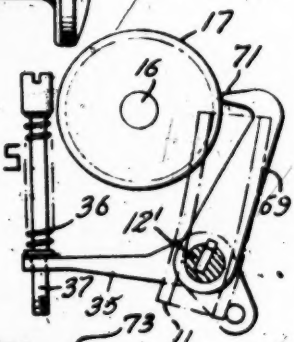

Fig. 11

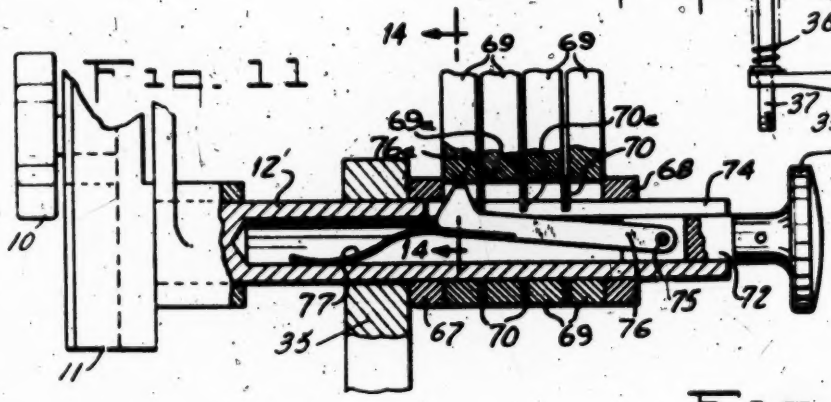

Fig. 14

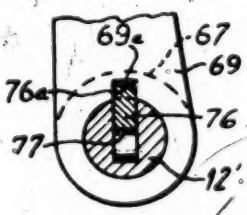

Fig. 12

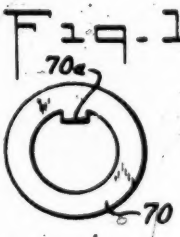

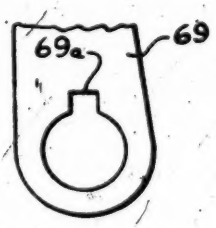

Fig. 13

INVENTOR
FRITZ GEGAUF

BY Lucas M. Strauss atty.

United States Patent Office 2,877,726 Patented Mar. 17, 1959

2,877,726

ZIG-ZAG SEWING MACHINES

Fritz Gegauf, Steckborn, Switzerland, assignor to The Singer Manufacturing Company, a corporation of New Jersey

Original application May 29, 1953, Serial No. 358,377, now Patent No. 2,832,302, dated April 29, 1958. Divided and this application December 2, 1957, Serial No. 700,079

The terminal portion of the term of the patent subsequent to October 22, 1974, has been disclaimed

20 Claims. (Cl. 112—158)

The present invention relates to sewing machines, and more particularly to a sewing machine adapted for zig-zag stitch patterns, and is a divisional application of the application of Fritz Gegauf for United States patent filed on May 29, 1953, Serial Number 358,377 now United States Patent Number 2,832,302 for Sewing Machine.

Conventionally zig-zag sewing machines include a needle bar guide which is longitudinally reciprocable and oscillatable transversely of the direction of reciprocation of the needle bar. Interchangeable cam members for oscillating the needle bar guide are employed to permit various stitch patterns to be obtained. However, the interchange of the cam members is troublesome and time wasting inasmuch as conventionally, the cam members are lodged within the hollow arm of the frame post of the sewing machine, normally closed by a hinged cover with the cam members being somewhat difficult to reach. Further, since the cam members must be lubricated they are often oily and the handling thereof may eventually result in the oil rubbing off on the hands of the user with possible eventual soiling of material to be stitched. Additionally, the cam members are comparatively small and may be easily lost. Accordingly, it is a primary object of the present invention to eliminate the necessity of interchanging the cam members each time another stitch pattern is to be selected.

The concept of this invention features the use in a sewing machine of a drive shaft on which a plurality of cam discs are mounted. There is provided oscillatable means in driving connection with the needle bar guide of the sewing machine which oscillatable means is oscillated selectively by one of the cam discs. Incorporated in the invention is means for selectively employing in any desired sequence each of the cam discs with its associated follower.

A push button actuator is employed for enabling the selected employment of each cam disc and its associated cam follower.

The cam discs may be permanently or removably mounted on the drive shaft, it being noted that the arrangement of the several cam discs enables the invention to carry out one of its more important objects, that is, enabling the sewing machine to produce hundreds of desirable stitch patterns without necessitating the removal or replacement of parts.

A further object of the invention is to enable the user of the sewing machine to change the stitch pattern being employed by merely pushing a push button and rotating the push button to a further selected position.

An additional object of the invention resides in the provision of means facilitating convenient actuation of sewing machine parts for the production of any desirable zig-zag stitch pattern and the complete disengagement of the parts for allowing ordinary sewing operations.

Still another feature of the invention is to provide means allowing the user of the sewing machine to readily observe the particular stitch pattern employed.

Yet a further object of the present invention is to

provide means conducive to easy and convenient switching over from one stitch pattern to another stitch pattern while the machine is in operation, push buttons, keys or other simple elements being employable to bring about instantaneous changes in the operation of the sewing machine.

A further object of the present invention is to provide means contributing to a compact sewing machine whose parts are easily accessible, may be readily interchanged, if desired and ensure always precise functioning of the sewing machine during its various operational steps.

The above and other objects of the invention will become further apparent from the following detailed description, reference being made to the accompanying drawings showing preferred embodiments of the invention.

In the drawings:

Fig. 1 is a longitudinal sectional view of an upper part of a sewing machine constructed in accordance with the present invention exposing control means for the needle;

Fig. 2 is a fragmentary longitudinal sectional view of a detail of the sewing machine seen in Fig. 1;

Fig. 3 is a partial top plan view of the machine shown in Fig. 2, with parts thereof shown in section for the sake of clarity;

Fig. 4 is a partial vertical sectional view taken along the lines 4—4 of Fig. 2;

Fig. 5 is an enlarged detailed sectional view further illustrating the structure shown in Fig. 4 and looking at an opposite side thereof;

Figs. 6 and 7 show in development halves of the periphery of the knurled flange on the adjustable control means with stitch patterns engraved or otherwise formed thereon;

Fig. 8 is a side elevational view of a modified form of the disengaging device employable in the invention;

Fig. 9 is a plan view of the modified form of the disengaging device employable in the invention, with parts thereof being shown in section;

Fig. 10 is a plan view of a further form of the disengaging device for use in the invention equipped with a plurality of cam followers, selectively coupleable to an oscillatable shaft;

Fig. 11 is a vertical sectional view of Fig. 10;

Fig. 12 illustrates the shape of a washer;

Fig. 13 is a partial elevational view of one of the levers; and

Fig. 14 is a partial sectional view taken along line 14—14 in Fig. 11.

Fig. 15 is a schematic view illustrating a left-hand elevation of the mechanism shown in Figs. 10 and 11.

Referring now to the accompanying drawings, wherein like reference numerals designate similar parts throughout the various views, reference numeral 2 designates the hollow arm of a sewing machine according to the invention and integrally formed with the frame post 1. An upper drive shaft 3 is supported in arm 2. The shaft 3 carries a conventional handwheel 4 and is movable by a transmission element 5.

The needle bar 6 has imparted thereto a reciprocating up-and-down motion by drive means (not shown) of conventional construction. The needle bar 6 carries the sewing needle 7 and is movably guided in a suitable frame 8 which receives its oscillatory motion from a bar 9. The bar 9 is an extension of link member 10 which is pivotally mounted on a pin 11.

The needle bar 6 receives by the oscillatory motion from the bar 9 the transverse motion necessary for producing a zig-zag stitch pattern. The amplitude of this transverse motion is variable from zero to a predetermined upper limit. A block 13 is provided to determine the upper limit and is slidably mounted in a guide lever

A flat coupling lever 76 is articulated on a transverse pin 75 within the bifurcated inner end of slide 72. The free end 76a of lever 76 forms a coupling head having opposite sloping faces. A leaf spring 77 fixed to the lever 76 urges the lever 76 into a position where the coupling head 76a projects outwardly through the slot 74, so that by axial displacement of the slide 72, by means of the hand knob 73, any one of the four cam-followers 69 can be angularly coupled to the shaft 12', as the coupling head 76a engages the radial recess of one of the cam-followers 69.

Thus, the oscillating motion which is imparted to each cam-follower 69 by its corresponding cam disc 17 is transmitted to the shaft 12' and to the guide lever carried thereby. When the slide 72 is axially displaced lengthwise of the shaft 12', the coupling lever 76 is retracted by the sloping face of its coupling head 76a as the coupling head 76a meets the integrally projecting tongue 70a of any of the washers 70 in its way, so that the coupling head 76a may contact any of the other cam-followers 69 as desired, after which the knob 73 is axially rotated so that the head 76a may properly engage the slot 69a of the selected follower 69.

From the above it is to be understood that the form of the invention shown in Figs. 10 to 15, like that shown in Figs. 1 to 9, comprises a plurality of spaced cam discs 17 mounted adjacent each other on the shaft 16 for rotation therewith, an axially adjustable cylinder 29 (Fig. 5) or 12' (Fig. 11), a plurality of spaced cam followers 33 or 71 on the control cylinder engageable with the cam discs, the cam followers being axially offset from each other, an oscillating lever 22 (Fig. 3) or 11—12' (Fig. 10) operatively engaging the control cylinder, and oscillatable means 9, 10 and 13 operatively connecting the oscillating lever 22 (Fig. 2) or 11—12' (Fig. 10) with the needle bar guide 8 so that upon axially adjusting the control cylinder to engage one of the cam followers with one of the cam discs, rotation of the shaft 16 causes oscillation of the needle bar guide 8 in accordance with the contour of the surface of one cam disc.

It is to be understood that when the modified form of the present invention, as illustrated in Figs. 10–15, is applied in the sewing machine arm 2, illustrated in Figs. 1–4, the shaft 12', shown in Figs. 1–4, has its one end modified in the manner as is disclosed in Figs. 10–15, with the modified shaft designated as 12' so as properly to accommodate the cam followers 71—71. These cam followers 71—71 may selectively engage the rotary cams 17—17 to the end that the shaft 12' is oscillated about its longitudinal axis and thereby actuates the guide lever 11 which is rigidly carried upon the shaft 12'.

Thus, it is manifest that the modified version of the present invention disclosed in Figs. 10–15 is substituted completely for the control cylinder 29 with its accompanying mechanism including the bell crank lever 21—22, supporting shaft 20 and connecting link 34. However, the angle lever 35 with its associated compression spring 36 and rod 37 is retained so that the shaft 12' will be oscillated about its longitudinal axis in one direction by the rotary cams 17 and in the other direction by the spring 36.

Referring to Figs. 1 to 9, inclusive, it can be seen that there has been provided a zig-zag sewing machine comprising a hollow arm 2 with a needle bar guide 8 therein. A needle bar 6 is longitudinally reciprocable in the needle bar guide for imparting reciprocal motion to a needle 7 mounted on the needle bar, and there is a rotatable shaft 16 within the hollow arm 2, a plurality of spaced cam discs 17 mounted adjacent each other on the shaft 16 for rotation therewith, an axially adjustable control cylinder 29, as well as a plurality of spaced cam followers 33 on the control cylinder 29 engageable with said cam discs.

The cam followers 33 are axially offset from each other, and an oscillating lever 21, 22 operatively engages the control cylinder 29, and oscillatable means 9, 10, 10a, 13 operatively connecting the oscillating lever 21, 22 with the needle bar guide 8 so that upon axially adjusting the control cylinder 29 to engage one of the cam followers 33 with one of the cam discs 17, rotation of the shaft 16 causes oscillation of the needle bar guide 8 in accordance with the contours of the surface of the cam disc 17 being engaged by the cam follower 33.

Referring to Figs. 1 to 15, it is to be understood that the invention broadly includes a plurality of differently shaped cams 17 each mounted for rotation about an axis 16 fixed by the frame 2, means 14 and 15 rotating the cams about their axes, a plurality of cam-responding elements 33 or 71 each corresponding to a respective one of the cams 17, means 29 or 12' mounting each of the cam-responding elements 33 or 71 upon the frame for movements relative to the frame in response to the rotation of the cam associated with such element and permanently aligning each of such elements in radial relation with its associated cam, means 9 to 13 for connecting each of the cam-responding elements with the member 7 to be controlled, and operator-responsive means 25 or 73 connected with each of the cam-responding elements for releasably connecting each element in cam-responding relation with its associated cam whereby the member 7 to be controlled can be sequentially connected in operative relation with each of the cams 17.

More specifically, the present invention includes a plurality of differently shaped cams 17 each mounted for rotation about an axis 16 fixed by the frame 2, means 14 and 15 rotating the cams about their axes, a lever 22 or 11—12' pivotally mounted about an axis fixed by the frame, a plurality of cam-responding elements 33 or 71 each corresponding to a respective one of the cams 17, means 29 or 69 mounting the cam-responding elements upon the lever for movements relative to the lever, manually operable means 25 or 73 carried by the lever for releasably locking each of the elements against movement relative to the lever and in cam-responding relation with its associated cam whereby the lever 22 or 11—12' may be pivoted about its axis in conformance with the selected cam response of any element, and means 9, 10, 11 and 13 connecting the lever with the member to be controlled.

Thus, in both forms of the invention the cam-responding elements 33 or 71 are, in effect, carried upon a lever 22 or 11—12' which is pivotally mounted upon the machine frame.

Further it is apparent that there has been disclosed novel push button 25 actuated means for selectively positioning the control cylinder 29 to bring a selected cam follower 33 into engagement with a selected cam disc 17.

Various changes and modificaitons may be made without departing from the spirit and scope of the present invention and it is intended that such obvious changes and modifications be embraced by the annexed claims.

Having thus described the invention, what is claimed as new and desired to be secured by Letters Patent is:

1. In a zig-zag sewing machine having a frame casing, a needle bar guide in said casing, a needle bar longitudinally reciprocable in said needle bar guide for imparting reciprocal motion to a needle when mounted on said bar, and means for oscillating said needle bar guide; a rotatable first shaft, a plurality of spaced cam discs mounted adjacent each other on said shaft for rotation therewith, a hollow second shaft provided with a longitudinal slot and extending substantially parallel to said first shaft, said second shaft being operatively connected with said oscillating means, a plurality of cam follower levers movable about said second shaft and overlying said slot, a spring-urged coupling lever positioned within said second shaft, knob means operatively connected with said coupling lever and extending exteriorly of the hollow of said second shaft and said casing, said knob means being rotatable and longitudinally displaceable

relative to said second shaft so that longitudinal displacement of said knob means serves to engage said coupling lever with one of said cam follower levers and so that rotational displacement of said knob serves to engage said one cam follower lever with its respective cam disc, whereby the contours of the surface of said one cam member will be converted to a predetermined oscillatory pattern of said second shaft, and in turn of said needle bar and needle carried thereby.

2. A zig-zag sewing machine comprising a hollow arm, a needle bar guide in said hollow arm, a needle bar longitudinally reciprocable in said needle bar guide for imparting reciprocal motion to a needle mounted on said needle bar, a rotatable shaft within said hollow arm, a plurality of spaced cam discs mounted adjacent each other on said shaft for rotation therewith, an axially-adjustable control cylinder, a plurality of spaced cam followers fixed on said control cylinder engageable with said cam discs, said cam followers being axially offset from each other, an oscillating lever operatively engaging said control cylinder, oscillatable means operatively connecting said oscillating lever with said needle bar guide so that upon axially adjusting said control cylinder to engage one of said cam followers with one of said cam discs, rotation of said shaft causes oscillation of said needle bar guide in accordance with the contours of the surface of said one cam disc, a pin slidable within said control cylinder, means for shifting the pin within the control cylinder and lock means adjustably locking said pin to said control cylinder in one of a plurality of selected axial control positions to hold said control cylinder in a selected position.

3. A zig-zag sewing machine comprising a hollow arm, a needle bar guide in said hollow arm, a needle bar longitudinally reciprocable in said needle bar guide for imparting reciprocal motion to a needle mounted on said needle bar, a rotatable shaft within said hollow arm, a plurality of spaced cam discs mounted adjacent each other on said shaft for rotation therewith, an axially adjustable control cylinder, a plurality of spaced cam followers fixed on said control cylinder engageable with said cam discs, said cam followers being axially offset from each other, an oscillating lever operatively engaging said control cylinder, oscillatable means operatively connecting said oscillating lever with said needle bar guide so that upon axially adjusting said control cylinder to engage one of said cam followers with one of said cam discs, rotation of said shaft causes oscillation of said needle bar guide in accordance with the contours of the surface of said one cam disc, a pin slidable within said control cylinder, lock means adjustably locking said pin to said cylinder in one of a plurality of selected axial control positions to hold said control cylinder in a selected position, said pin having an end extending outwardly of said casing, a push button on said end of said pin, and a spring engaging said push button to urge said pin into engagement with said lock means, said push button when depressed disengaging said pin.

4. A zig-zag sewing machine comprising a hollow arm, a needle bar guide in said hollow arm, a needle bar longitudinally reciprocable in said needle bar guide for imparting reciprocal motion to a needle mounted on said needle bar, a rotatable shaft within said hollow arm, a plurality of spaced cam discs mounted adjacent each other on said shaft for rotation therewith, an axially adjustable control cylinder mounted within the hollow arm, a plurality of spaced cam followers fixed on said control cylinder engageable with said cam discs, said cam followers being axially offset from each other, an oscillating lever operatively engaging said control cylinder, and oscillatable means operatively connecting said oscillating lever with said needle bar guide so that upon axially adjusting said control cylinder to engage one of said cam followers with one of said cam discs, rotation of said shaft causes oscillation of said needle bar guide in accordance with the contours of the surface of said one cam disc, said hollow arm having an opening therein, a circular flange formed on said control cylinder and positioned with its periphery extending outwardly of said hollow arm through said opening thereby to afford means whereby the control cylinder may be manually adjusted.

5. An ornamental sewing machine for selectively producing a plurality of different stitch patterns and comprising a hollow arm, a needle pivotally carried by said hollow arm and mounted for endwise reciprocation and for lateral swinging movements, a rotary shaft mounted in said frame for reciprocating said needle, means for rotating said shaft, a series of rotary cams having different stitch patterns carried by said hollow arm and mounted about a common axis, means connected with said shaft for rotating said cams about said common axis, a rotatable control cylinder mounted in said hollow arm and having a plurality of spaced cam followers fixed thereto, said cam followers being axially offset from each other, an oscillating lever operatively engaging said control cylinder, and oscillatable means operatively connecting said oscillating lever with said needle bar guide so that upon axially adjusting said control cylinder to engage one of said cam followers with one of said cam discs, rotation of said shaft causes oscillation of said needle bar guide in accordance with the contour of the surface of said one cam disc.

6. An ornamental sewing machine for selectively producing a plurality of different stitch patterns and comprising a hollow arm, a needle pivotally carried by said hollow arm and mounted for endwise reciprocation and for lateral swinging movements, a rotary shaft mounted in said frame for reciprocating said needle, means for rotating said shaft, a series of rotary cams having different stitch patterns carried by said hollow arm and mounted about a common axis, means connected with said shaft for rotating said cams about said common axis, a rotatable control cylinder mounted in said hollow arm and having a plurality of spaced cam followers fixed thereto, said cam followers being axially offset from each other, an oscillating lever operatively engaging said control cylinder, and oscillatable means operatively connecting said oscillating lever with said needle bar guide so that upon axially adjusting said control cylinder to engage one of said cam followers with one of said cam discs, rotation of said shaft causes oscillation of said needle bar guide in accordance with the contours of the surface of said one cam disc, said hollow arm having an opening therein, said control cylinder having a flange thereon, said flange extending outwardly of said hollow arm through said opening.

7. An ornamental sewing machine for selectively producing a plurality of different stitch patterns and comprising a hollow arm, a needle pivotally carried by said hollow arm and mounted for endwise reciprocation and for lateral swinging movements, a rotary shaft mounted in said frame for reciprocating said needle, means for rotating said shaft, a series of rotary cams having different stitch patterns carried by said hollow arm and mounted about a common axis, means connected with said shaft for rotating said cams about said common axis, a rotatable control cylinder mounted in said hollow arm and having a plurality of spaced cam followers fixed thereto, said cam followers being axially offset from each other, an oscillating lever operatively engaging said control cylinder, and oscillatable means operatively connecting said oscillating lever with said needle bar guide so that upon axially adjusting said control cylinder to engage one of said cam followers with one of said cam discs, rotation of said shaft causes oscillation of said needle bar guide in accordance with the contours of the surface of said one cam disc, said control cylinder being movable with respect to said shaft, disengaging means contacting said control cylinder to move said control

cylinder to disengage and space all of said cam followers from all of said cam discs.

8. A control mechanism for an ornamental stitch sewing machine having a frame and a member in the frame to be controlled by the mechanism, comprising a plurality of differently shaped cams each mounted for rotation about an axis fixed by the frame, means rotating the cams about their axes, a plurality of cam-responding elements each corresponding to a respective one of the cams, means mounting each of the cam-responding elements upon the frame for movements relative to the frame in response to the rotation of the cam associated with such element and permanently aligning each of such elements in radial relation with its associated cam, means connecting each of the cam-responding elements with the member to be controlled, a single unitary operator-responsive handle, means shiftably mounting the handle upon the frame, means operatively connecting such handle with each of the cam-responding elements for releasably connecting each element in cam-responding relation with its associated cam whereby the member to be controlled can be sequentially connected in operative relation with each of the cams in response to the operator-propelled movements of the handle, and means releasably locking a selected cam-responding element in operative relation with its associated cam during the normal operation of the machine.

9. An ornamental stitch sewing machine comprising, a frame, a needle mounted in the frame for endwise reciprocation and for sidewise movements transversely of the direction of reciprocation, a plurality of differently shaped cams each mounted for rotation about an axis fixed by the frame, means rotating the cams about their axes in synchronism with the reciprocating movements of the needle, a plurality of cam-responding elements each corresponding to a respective one of the cams, means mounting each of the cam-responding elements upon the frame for movements relative to the frame in response to the rotation of the cam associated with such element and permanently aligning each of such elements in radial relation with its associated cam, means connecting each of the cam-responding elements with the needle for shifting the latter sidewise, a single unitary operator-responsive handle, means shiftably mounting the handle upon the frame, means operatively connecting such handle with each of the cam-responding elements for releasably connecting each element in cam-responding relation with its associated cam whereby the needle can be sequentially connected in operative relation with each of the cams in response to the operator-propelled movements of the handle, and means releasably locking a selected cam-responding element in operative relation with its associated cam during the normal operation of the machine.

10. A control mechanism for an ornamental stitch sewing machine having a frame and a member in the frame to be controlled by the mechanism, comprising a plurality of differently shaped cams each mounted for rotation about an axis fixed by the frame, means rotating the cams about their axes, a lever pivotally mounted about an axis fixed by the frame, a plurality of cam-responding elements each corresponding to a respective one of the cams, means mounting the cam-responding elements upon the lever for movements relative to the lever, manually operable means carried by the lever for releasably locking each of the elements against movement relative to the lever and in cam-responding relation with its associated cam whereby the lever may be pivoted about its axis in conformance with the selected cam response of any element, and means connecting the lever with the member to be controlled.

11. An ornamental stitch sewing machine comprising a hollow frame, a needle mounted in the frame for endwise reciprocation and for sidewise movements transversely of the direction of reciprocation, a plurality of cylindrical rotary cams mounted within the frame for rotation about a common axis fixed by the frame, means rotating the cams about their common axis, a lever pivotally mounted within the frame and about an axis fixed by the frame, a plurality of cam-responding elements each corresponding to a respective one of the cams, means mounting the elements upon the lever for movements relative to the lever, spring means biasing the lever about its axis thereby to bias the elements toward the cams, operator-responsive means carried by the lever within the frame for releasably locking each of the elements against movement relative to the lever and in cam-responding relation with its associated cam whereby the lever may be pivoted about its axis in conformance with the selected cam response of any element, handle means formed on the operator-responsive means and extending outside the confines of the frame, and means connecting the lever with the needle for shifting the latter sidewise.

12. An ornamental stitch sewing machine comprising, a frame, a needle mounted in said frame for endwise reciprocation and for sidewise movements transversely of the direction of reciprocation, means connected to said needle for shifting the needle sidewise, a plurality of cylindrical rotary cams mounted upon said frame for rotation about a fixed common axis, means for rotating said cams in synchronism with the needle reciprocating movements, a plurality of cam-tracking elements of which each corresponds to a respective one of said cams for sensing and responding to its associated cam in response to the movements of the cam, means supporting each of said elements upon said frame for shifting movements relative to and independently of its associated elements, means permanently aligning each of said elements for sensing and responding to its associated cam only, a single unitary operator-responsive handle, means shiftably mounting the handle upon the frame, means operatively connecting such handle with each of the cam-tracking elements for releasably establishing an operative connection between said first-mentioned means and each of said elements whereby the needle may be sequentially connected in operative relation with each of the cams in response to operator-propelled movements of the handle, and means releasably maintaining an operative connection between the first mentioned means and a selected element during the normal operation of the machine.

13. A control mechanism for an ornamental stitch sewing machine having a frame and a member in the frame to be controlled by the mechanism, comprising a plurality of differently shaped cams each mounted for rotation about an axis fixed by the frame, means rotating the cams about their axes, a pluralify of cam-responding elements each corresponding to a respective one of the cams, an element-carrying means shiftably mounted upon the frame, means rotatably mounting the elements upon and about an axis fixed by the element-carrying means with the elements being fixed relative to each other and being spaced lengthwise along and angularly about such axis, spring means biasing the element-carrying means toward the cams, operator-responsive means connected with the elements for rotating them in unison about their common axis thereby sequentially to present each element to its associated cam, means releasably locking a selected element in cam-responding relation with its associated cam whereby such element together with the element-carrying means may be shifted relative to the frame in response to the movement of a selected cam, and means connecting the element-carrying means with the member to be controlled.

14. An ornamental stitch sewing machine comprising, a frame, a needle mounted in the frame for endwise reciprocation and for sidewise movements transversely of the direction of reciprocation, a plurality of differently shaped cams each mounted for rotation about a common axis fixed by the frame, means rotating the cams about the common axis in synchronism with the needle reciprocating

movements, a plurality of cam-responding elements each corresponding to a respective one of the cams, an element-carrying means shiftably mounted upon the frame, means rotatably mounting the elements upon and about an axis fixed by the element-carrying means with the elements being fixed relative to each other and being spaced lengthwise along and angularly about such axis, spring means biasing the element-carrying means toward the cams, operator-responsive means connected with the elements for rotating them in unison about their common axis thereby sequentially to present the elements to their associated cams, means releasably locking a selected element in cam-responding relation with its associated cam whereby such element together with the element-carrying means may be shifted relative to the frame in response to the movements of a selected cam, and means connecting the element-carrying means with the needle thereby to shift the latter sidewise.

15. An ornamental stitch sewing machine comprising, a frame, a needle mounted in the frame for endwise reciprocation and for sidewise movements transversely of the direction of reciprocation, a plurality of differently shaped cams each mounted for rotation about a common axis fixed by the frame, means rotating the cams about the common axis in synchronism with the needle reciprocating movements, a plurality of cam-responding elements each corresponding to a respective one of the cams, a lever pivotally mounted upon the frame, means rotatably mounting the elements upon and about an axis fixed by the lever in parallelism with the cam axis with the elements being fixed relative to each other and being spaced lengthwise along and angularly about their axis of rotation, spring means biasing the lever toward the cams, operator-responsive means connected with the elements for rotating them in unison about their common axis thereby sequentially to present the elements to their associated cams, means releasably locking a selected element in cam-responding relation with its associated cam whereby such element together with the lever may be shifted about the lever pivot axis in response to the movements of a selected cam, and means connecting the lever with the needle thereby to shift the latter sidewise.

16. An ornamental stitch sewing machine comprising, a frame, a needle mounted in the frame for endwise reciprocation and for sidewise movements transversely of the direction of reciprocation, a plurality of differently shaped edge cams mounted for rotation about a common axis fixed by the frame, means rotating the cams about the common axis in synchronism with the needle reciprocating movements, a plurality of cam-responding elements each corresponding to a respective one of the cams, a lever pivotally mounted at one end upon the frame about an axis disposed in parallelism with the cam axis, means rotatably mounting the elements upon and about an axis fixed by the other end of the lever in parallelism with the cam axis with the elements being fixed relative to each other in helically spaced relation about their rotary axis, and with each element extending radially of the rotary axis and being disposed in substantially the same plane as its associated cam, spring means biasing the lever toward the cams, operator-responsive means connected with the elements for rotating them in unison about their rotary axis thereby sequentially to present the elements to their associated cams, means releasably locking a selected element in cam-responding relation with its associated cam whereby such element together with the lever may be shifted about the lever pivot axis in response to the movements of a selected cam, and means connecting the lever with the needle thereby to shift the latter sidewise.

17. An ornamental stitch sewing machine comprising, a frame, a needle mounted in the frame for endwise reciprocation and sidewise movements transversely of the direction of reciprocation, an oscillatable lever pivotally mounted about an axis fixed by the frame, means

connecting the lever with the needle for shifting the latter sidewise, a plurality of cylindrical rotary edge cams mounted upon the frame for rotation about a fixed common axis, means rotating the cams in synchronism with the needle reciprocating movements, a plurality of cam-responding elements each corresponding to a respective one of the cams, means pivotally mounting each of the elements upon the lever and about a common axis fixed by the lever, spring means biasing the lever toward the cams, and manually operable means carried by the lever and shiftable lengthwise of the element pivot axis for releasably locking each of the elements against movement relative to the lever and in cam-responding relation with its associated cam whereby the needle may be shifted sidewise in conformance with a selected cam response of an element.

18. An ornamental stitch machine comprising a hollow frame, a needle mounted in the frame for endwise reciprocation and for sidewise movements transversely of the direction of reciprocation, means to reciprocate the needle, a plurality of cylindrical rotary cams mounted within the frame for rotation about a common axis fixed by the frame, means rotating the cams about their common axis in synchronism with the reciprocating movements of the needle, a single member mounted within the frame for movements relative to the frame, a plurality of cam-responding elements each corresponding to a respective one of the cams, means mounting the elements upon the member for movements relative to the member, operator-responsive means for sequentially and releasably locking each of the elements against movement relative to the member and in cam-responding relation with its associated cam whereby the member may be shifted relative to the frame in conformance with the selected cam response of any element, and means operatively connecting the member with the needle for shifting the latter sidewise.

19. An ornamental stitch machine comprising a hollow frame, a needle mounted in the frame for endwise reciprocation and for sidewise movements transversely of the direction of reciprocation, means to reciprocate the needle, a plurality of cylindrical rotary cams mounted within the frame for rotation about a common axis fixed by the frame, means rotating the cams about their common axis, in synchronism with the reciprocating movements of the needle, a single member mounted within the frame for movements relative to the frame, a plurality of cam-responding elements each corresponding to a respective one of the cams, means mounting the elements upon the member for movements relative to the member, operator-responsive means for sequentially and releasably locking each of the elements against movement relative to the member and in cam-responding relation with its associated cam whereby the member may be shifted relative to the frame in conformance with the selected cam response of any element, such operator-responsive means including a single handle element extending outside the confines of the frame and serving upon the manual movement thereof sequentially to position each of the elements in cam-responding relation with its associated cam, and means connecting the member with the needle for shifting the latter sidewise.

20. An ornamental stitch machine comprising a hollow frame, a needle mounted in the frame for endwise reciprocation and for sidewise movements transversely of the direction of reciprocation, means to reciprocate the needle, a plurality of cylindrical rotary cams mounted within the frame for rotation about a common axis fixed by the frame, means rotating the cams about their common axis in synchronism with the reciprocating movements of the needle, a single member mounted within the frame for movements relative to the frame, a plurality of cam-responding elements each corresponding to a respective one of the cams, means mounting the elements upon the member for movements relative to the

member, operator-responsive means carried by the member within the frame for sequentially and releasably locking each of the elements against movement relative to the member and in cam-responding relation with its associated cam whereby the member may be shifted relative to the frame in conformance with the selected cam response of any element, handle means connected with the operator-responsive means and extending outside the confines of the frame, and means connecting the member with the needle for shifting the latter sidewise.

References Cited in the file of this patent

UNITED STATES PATENTS

2,755,754 Urscheler ---------- July 24, 1956

GOVERNMENT'S EXHIBIT 179 (S-15)

Oct. 22, 1957 M. R. PERLA 2,810,360

ORNAMENTAL STITCH SEWING MACHINES

Filed Dec. 8, 1954 5 Sheets-Sheet 1

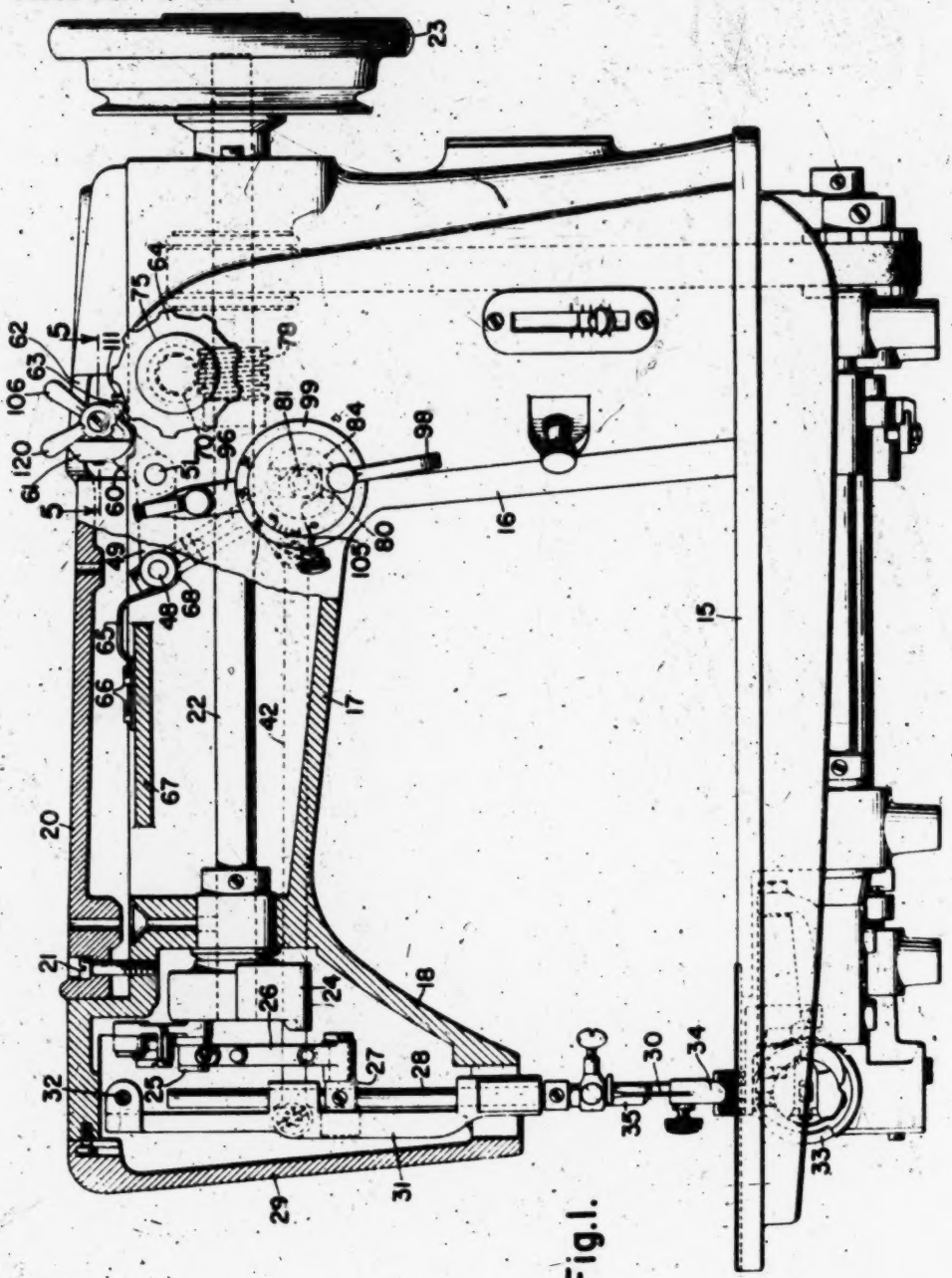

Fig.1.

INVENTOR
Martin R. Perla

BY

ATTORNEY

WITNESS

Oct. 22, 1957 M. R. PERLA 2,810,360

ORNAMENTAL STITCH SEWING MACHINES

Filed Dec. 8, 1954 5 Sheets-Sheet 2

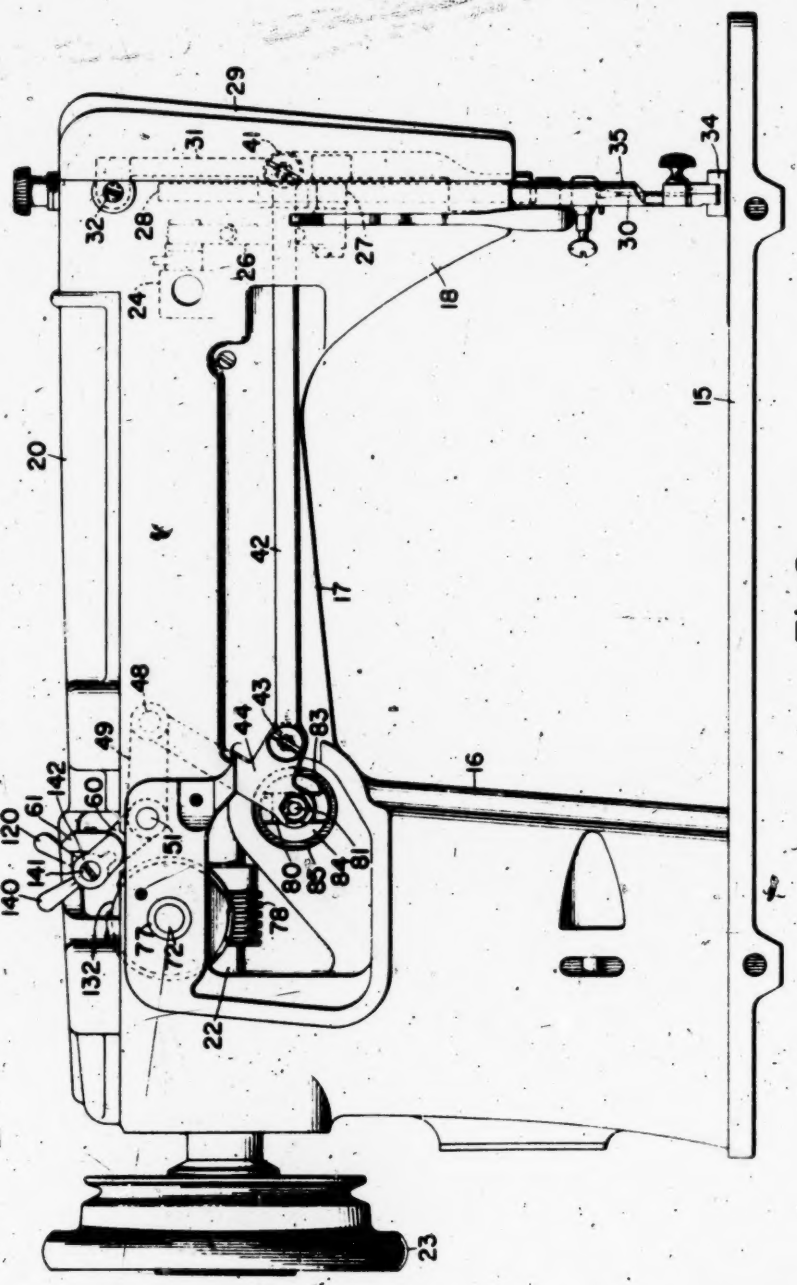

Fig.2.

INVENTOR
Martin R. Perla
BY J. H. Stanford
ATTORNEY

WITNESS
Godfrey Pecina

Oct. 22, 1957 M. R. PERLA 2,810,360

ORNAMENTAL STITCH SEWING MACHINES

Filed Dec. 8, 1954 5 Sheets-Sheet 3

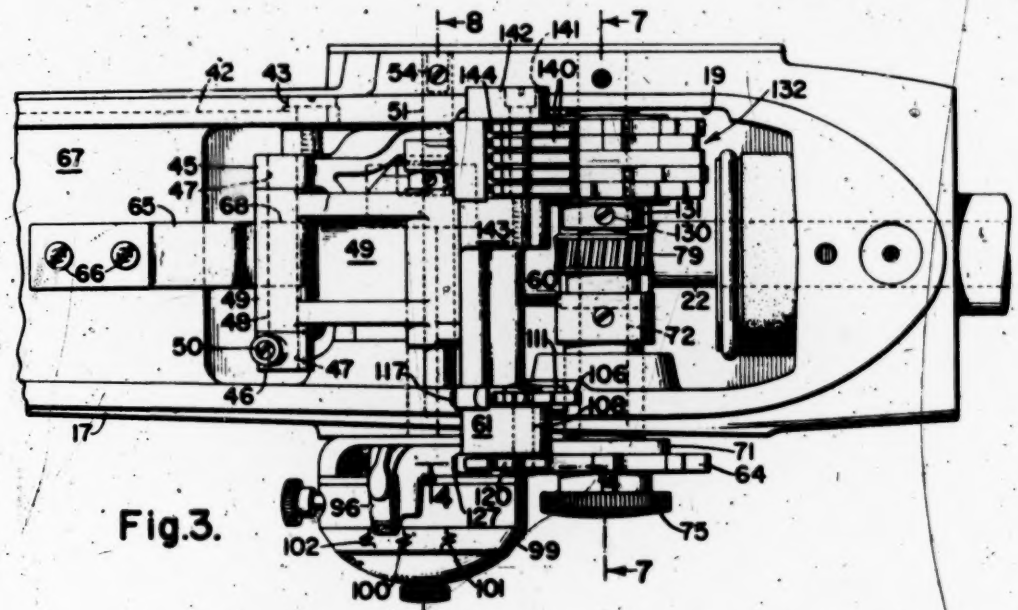

Fig.3.

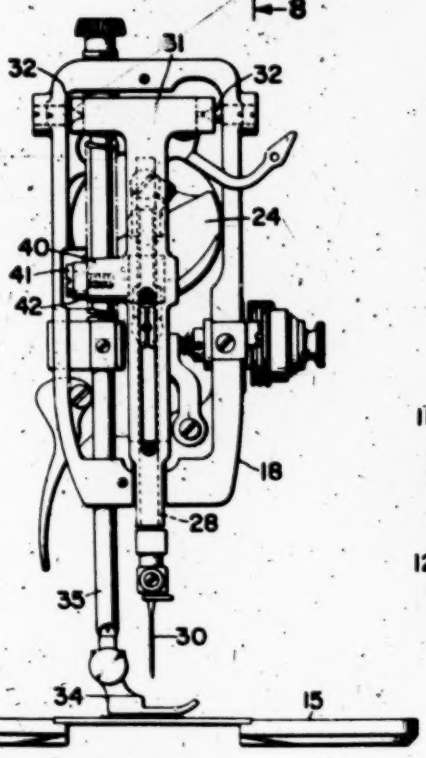

Fig.6.

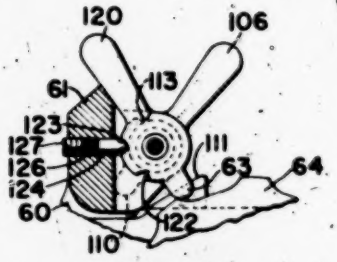

Fig.4.

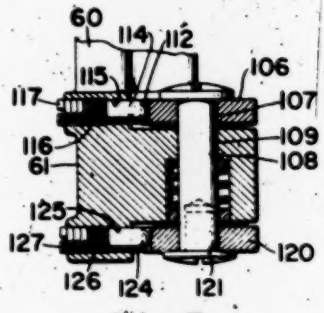

Fig.5.

INVENTOR
Martin R. Perla
BY
ATTORNEY

WITNESS

Oct. 22, 1957 M. R. PERLA 2,810,360

ORNAMENTAL STITCH SEWING MACHINES

Filed Dec. 8, 1954 5 Sheets-Sheet 4

Fig.7.

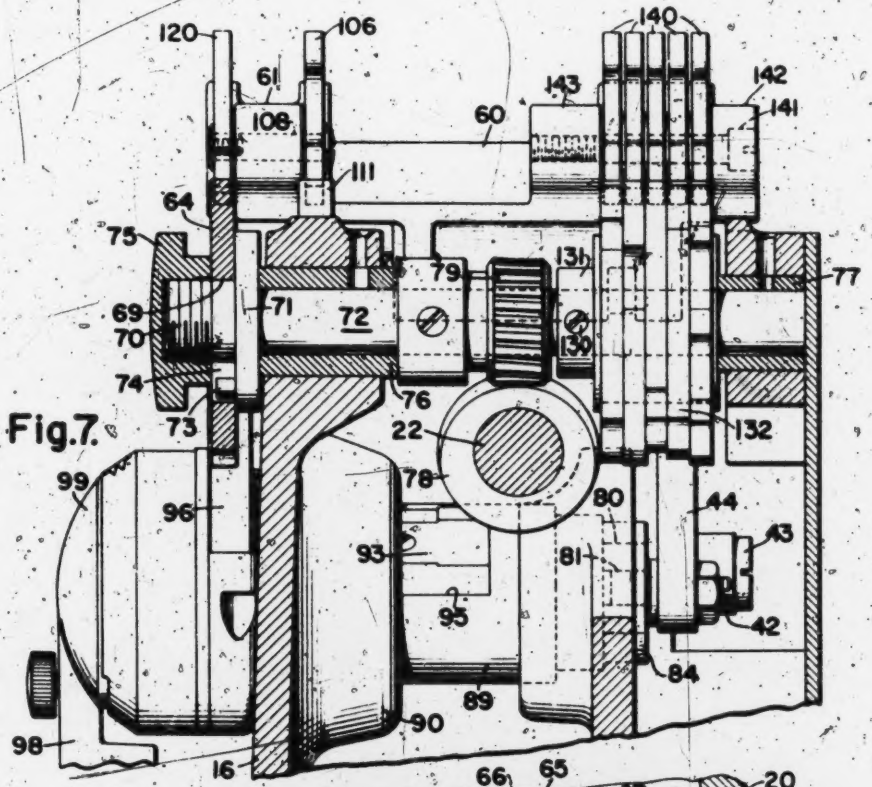

Fig.8.

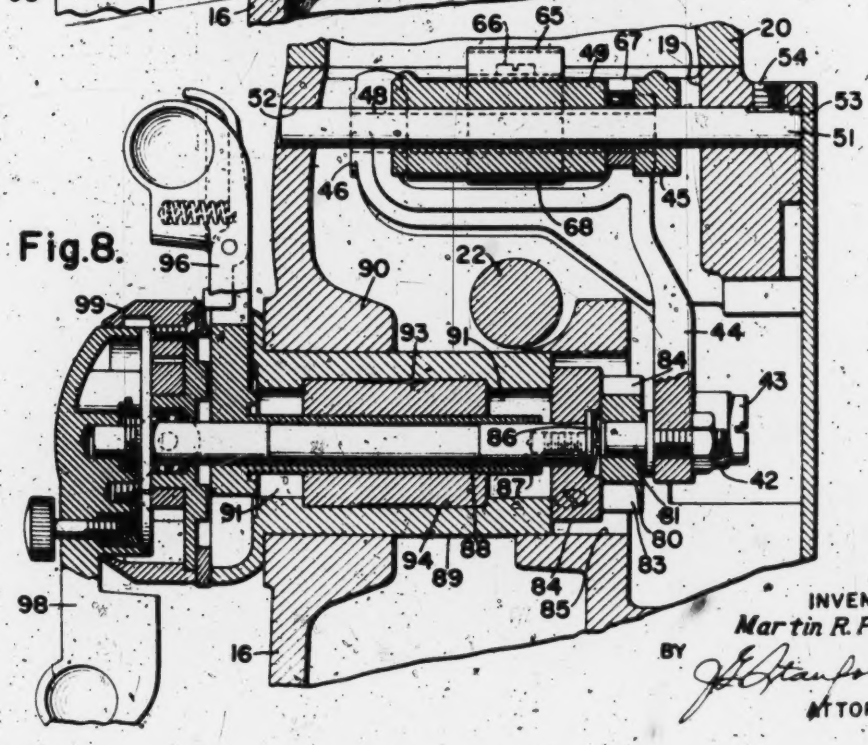

INVENTOR
Martin R. Perla
BY
J. E. Stanford
ATTORNEY

Oct. 22, 1957 M. R. PERLA 2,810,360

ORNAMENTAL STITCH SEWING MACHINES

Filed Dec. 8, 1954 5 Sheets-Sheet 5

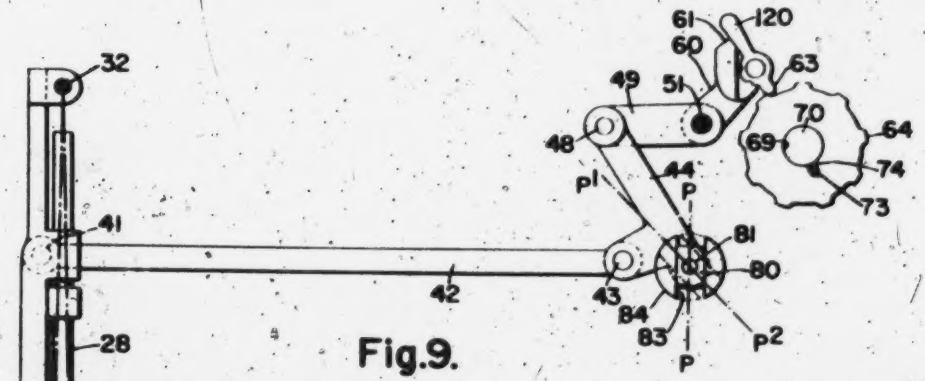

Fig.9.

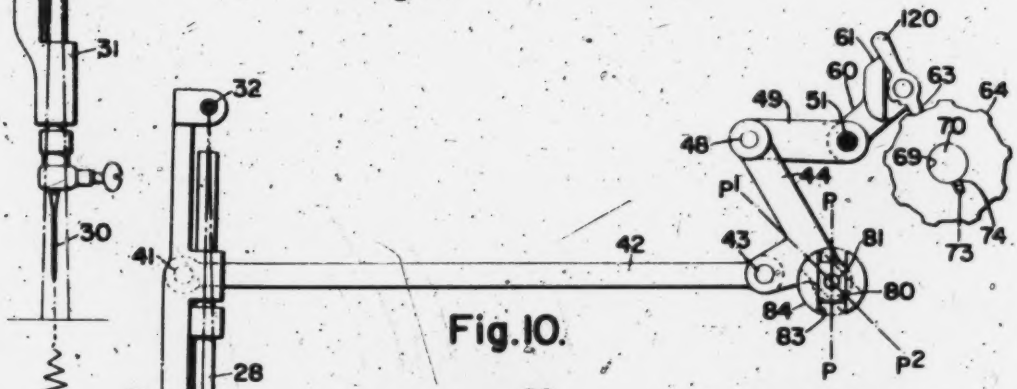

Fig.10.

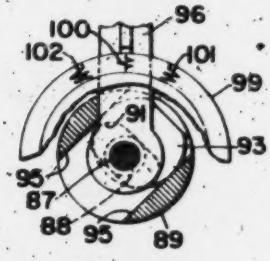

Fig.11.

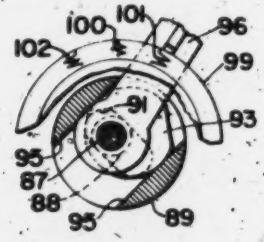

Fig.12.

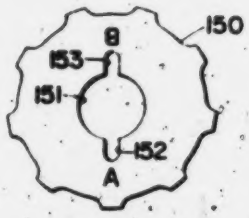

Fig.13.

WITNESS

Godfrey Peering

INVENTOR

Martin R. Perla

BY J. H. Stanford

ATTORNEY

United States Patent Office

2,810,360

Patented Oct. 22, 1957

1

2,810,360

ORNAMENTAL STITCH SEWING MACHINES

Martin Richard Perla, Bridgeport, Conn., assignor to The Singer Manufacturing Company, Elizabeth, N. J., a corporation of New Jersey

Application December 8, 1954, Serial No. 473,855

12 Claims. (Cl. 112—158)

This invention relates to improvements in ornamental stitch sewing machines and has for an object to provide such a machine with novel mechanism whereby the machine can be made to produce a large number of ornamental designs without any change in the construction of the machine.

A more specific object of the present invention is to provide a zigzag stitch type ornamental sewing machine with a plurality of different response producing records for controlling the actions of the zigzag stitch mechanism and means whereby such records may be selectively employed in different combinations for effecting various patterns of ornamental stitches.

A more specific object of the present invention is to provide a zigzag stitch sewing machine with novel mechanism including a plurality of rotary pattern cams and a plurality of cam tracking devices which function singularly or in combination to impart sidewise zigzag motions to the needle.

The above noted objectives have been accomplished by providing a zigzag type sewing machine, in addition to a removable rotary pattern cam located outside the confines of a sewing machine frame, with a nest of five rotary pattern cams which are secured together and rigidly mounted upon a cross-shaft which carries the usual removable cam. This nest of pattern cams is disposed within the confines of a sewing machine frame and it is not adapted normally to be removed from the machine by the operator. This machine is further provided with a first cam follower which is adapted to track the removable cam for the purpose of converting the rotary cam motions into lateral needle motions. In addition to this first cam follower the machine is provided with five supplementary cam followers of which each is adapted to track a respective one of the five nested pattern cams. These six cam followers are so arranged that any combination thereof may be operably positioned against their respective associated cams so that various combinations of cam pattern movements may be transmitted to the needle-bar, during a continuous predetermined stitching cycle.

With the above and other objects in view, the invention comprises the devices, combinations and arrangements of parts hereinafter described in connection with the accompanying drawings, which illustrate the preferred embodiment of the invention from which the several features of the invention and the advantages attained thereby will be readily understood by those skilled in the art.

In the drawings:

Fig. 1 represents a side elevation, partly in section, of a sewing machine containing the present improvements.

Fig. 2 represents a rear side elevation of the bracket-arm of the machine disclosed in Fig. 1.

Fig. 3 represents a top plan view of a portion of the bracket-arm with the bracket-arm cover removed.

Fig. 4 represents, on an enlarged scale, a sectional view taken substantially along the line 4—4 of Fig. 3.

2

Fig. 5 represents, on an enlarged scale, a sectional view taken substantially along the line 5—5 of Fig. 1.

Fig. 6 represents a left-hand end view of the sewing machine disclosed in Fig. 1 but with the face plate removed.

Fig. 7 represents, on an enlarged scale, a sectional view taken substantially along the line 7—7 of Fig. 3.

Fig. 8 represents, on an enlarged scale, a sectional view taken substantially along the line 8—8 of Fig. 3.

Figs. 9 and 10 respectively represent detail views of the needlegate and its vibrating pitman and diagrammatically illustrate the effects of the pitman controlling mechanism which causes the needle to vibrate across and from one side of the neutral position of nonvibration of the needle.

Figs. 11 and 12 respectively represent cross-sectional views of the adjusting shaft and supporting bushing with the neutral position controlling lever at different limits of movement in the respective views.

Fig. 13 represents a modified form of rotary cam.

The present improvements are illustrated in the drawings and herein described as embodied in a zigzag stitch sewing machine of the type disclosed in the United States patent of Alfred Tiesler, No. 2,014,916, dated September 17, 1935. Furthermore, the manually controlled adjusting means employed in connection with the present sewing machine for effecting lateral movements of the needle is disclosed and described in detail in the United States patent application Serial No. 356,928, filed May 25, 1953, by Ralph E. Johnson and Alexander F. Kerr, now Patent No. 2,713,838, dated July 26, 1955.

Referring to the drawings, the sewing machine illustrated has a bed-plate 15 affording a work support from one end of which rises the hollow standard 16 of a bracket-arm 17 overhanging the bed-plate and terminating at its free end in a hollow head 18.

The bracket-arm 17 is open at its upper portion so as to form a substantially trough-shaped unit and this opening, designated in Fig. 3 by the numeral 19, is adapted to be closed by means of a cover-plate 20 which is removably secured in position by a plurality of screws of which one, 21, is shown in Fig. 1.

Rotatably journaled in suitable bearings provided in the bracket-arm 17 is a horizontally disposed main shaft 22 extending lengthwise of the bracket-arm and carrying at one end a driving pulley 23. At its opposite end, the main shaft 22 carries a counter-balanced crank 24 provided with a crank-pin 25 connected by a jointed link 26 to a collar 27 secured upon a vertically disposed needle-bar 28. This needle-bar mechanism is located within the hollow head 18 which is closed at its forward end by means of a face-plate 29.

The needle-bar 28 carries at its lower end an eye-pointed needle 30 and is journaled for endwise reciprocation in bearings provided in a substantially T-shaped vibratory needle-bar gate 31. The gate 31 is pivotally hung upon a pair of oppositely disposed pintle screws 32—32 supported within apertures provided in the opposite wall portions of the hollow head 18 so as to provide for swinging movements of the gate about a substantially horizontally disposed axis.

Cooperating with the needle 30 below the bed-plate 15 and in the formation of lock stitches is a loop-taker 33 supported for rotation in a vertical plane parallel to and rearwardly of the plane of needle vibration. The loop-taker 33 is rotated twice for each complete needle reciprocation by driving connections with the main shaft 22. Feeding mechanism of the lower four-motion type is provided for advancing work past the needle in a direction transverse to the plane of needle vibration, and a presser-foot 34 is secured to a presser-bar 35 so as to oppose the work-engaging portion of the feeding mechanism in conventional manner.

Extending horizontally from an intermediate portion of the needle-bar gate 31 is a boss 40 to which is pivotally secured by means of a clamp-screw 41 one end portion of a link or pitman member 42. The pitman 42 is disposed horizontally and externally at the rearward side of the bracket-arm 17. As is best disclosed in Fig. 2, the other end of the pitman 42 is pivotally connected by means of a shoulder screw 43 to a link member 44, the upper end portion of which is formed in the manner of a fork so as to provide two spaced arms 45 and 46 of which each is apertured, as at 47, so as to be pivotally connected by means of a pin 48 to one end portion 49 of a cam-actuated bell-crank lever which also receives the pin 48. A set screw 50 threaded within the arm portion 46 locks the pin 48 in its proper position within the forked end portions of the link 44.

The lever 49 is pivotally mounted within the bracket-arm 17 by means of a horizontal stub shaft 51 which extends transversely across the sewing machine bracket-arm to be received within oppositely disposed apertures 52 and 53 formed in the bracket-arm walls. A set screw 54 locks the shaft 51 in its proper position within the bracket-arm.

Projecting upwardly and laterally from the bell-crank arm 49 is a second arm 60 carrying an offset portion 61 which extends through an aperture 62 formed within the cover-plate 20 so as to be positioned outside the confines of the sewing machine frame. As may be best understood by reference to Figs. 1 and 3, the arm portion 61 is provided with a cam follower, generally designated by the numeral 63, which cam follower will be hereinafter described in further detail.

The cam follower 63 is forced into engagement with the periphery of a rotary cam 64 by means of a leaf spring 65 of which one end portion is secured by means of screws 66, 66 to a cross brace 67 formed within the sewing machine bracket-arm, while the other end portion is formed as an upturned hook 68 which is disposed directly beneath the left-hand end portion of the bell-crank lever arm 49, as viewed in Fig. 1, so as to bias the lever in a clockwise direction thereby to urge the cam follower 63 downwardly into engagement with the periphery of the cam 64.

Referring particularly to Figs. 1, 3 and 7, the cam 64 is provided with an aperture 69 so that the cam may be removably disposed over the threaded end portion 70 and against the shouldered portion 71 of a cam shaft 72. The cam shaft 72 has its end shoulder portion 71 provided with a pin 73 which is received within an aperture 74 for the purpose of locating the cam in its proper position upon the cam shaft 72. A thumb screw 75 is adapted to be received over the threaded end portion 70 of the cam shaft for the purpose of locking the cam 64 in its operable position against the shoulder 71.

The cam shaft 72 is journaled in the front and rear walls of the bracket-arm 17 in bearing bushings 76 and 77, said cam shaft 72 being disposed above and horizontally transverse to the main shaft 22. A spiral gear 78 carried by the main shaft 22 drives a spiral gear 79 secured upon the cam shaft 72 whereby the latter is rotated, for example, at one-eighteenth the speed of rotation of the main shaft 22.

From the foregoing, it will be understood that, during the operation of the machine the cam 64 being carried by the rotary stub shaft 72 will rotate and thus actuate the cam follower 63 to the end that the bell-crank lever 49—60 will pivot about its pin 51 so that the lever 49 will rise and fall in a manner as dictated by the peripheral shape of the cam and, thus, the pitman 42 through the medium of the depending link member 44 will have its left-hand end portion, as viewed in Fig. 2, shifted up and down.

In order to translate the lateral vibratory movements of the pitman 42 into effective endwise reciprocatory movements, thereby to impart swinging movements to the needle-bar gate 31, a guide block 80 (see Figs. 2 and 8) is secured upon the pitman 42 by a pin 81, which guide block 80 is shiftably disposed within a guideway 83 constituted by a rearwardly open slot formed on the outer or rearwardly exposed face of an arcuately and bodily adjustable guide head 84. The guideway 83 and the block 80 preferably have straight sides but, if desired, the guideway and the block may each be arcuate with its center of curvature in one position of the guide 83 lying in the pivotal axis of the pitman 42 afforded by its pivotal connection 41 with the needle-bar gate 31.

The guide head 84 extends freely through an opening 85 in the rear wall of the bracket-arm 17 whereby the portion of the guide head containing the guideway 83 is disposed at the rear of the bracket-arm. The guide head 84 is secured by a screw 86 upon an adjusting shaft 87 disposed parallel to the cam shaft 72 and having its longitudinal axis in substantially the horizontal plane.

The adjusting shaft 87 of the guide head 84 is rotatably journaled in a bearing sleeve 88 in the form of a hollow shaft telescopically arranged in a coaxial relation with the adjusting shaft 87 and supported for turning and bodily lateral movements thereof by a supporting member in the form of a fixed bushing 89 secured by one or more screws, not herein shown, in a bearing boss 90 provided in the front wall of the bracket-arm 17. The opposite ends of the bearing sleeve 88 are fitted to slide in parallel guide slots 91, 91 provided at the opposite ends of the bushing 89, such guide slots being elongated in a direction corresponding to the general direction of the center line of the guideway 83 at its limit of angular movement in which the needle has its maximum lateral throw. The guide slots 91, 91 therefore confine the bearing sleeve 88 and the adjusting shaft 87 journaled in the bearing sleeve through lateral movements in a path corresponding to the path of movement of the block 80 in the guideway 83 at the limit of angular movement of the guide head 84 influencing maximum vibration of the needle. As the lateral movements of the adjusting shaft 87 determine the different neutral positions of nonvibration of the needle, it will be understood that the maximum needle vibration of the needle remains fixed on changing from one to another neutral position of nonvibration of the needle. This arrangement has the advantage of maintaining cooperative relationship between the needle and the loop-taker within predetermined limits of lateral throw of the needle so that within said limits no provision need be made for imparting compensating movements to the loop-taker regardless of the neutral position adjustment of the controlling mechanism.

In order manually to effect bodily shifting movement of the adjusting shaft 87 and therefore the axis of angular adjustment of the guide head 84, an eccentric 93 is secured by a set screw, not herein shown, upon the bearing sleeve 88 within the ends of the latter. The eccentric 93 is disposed within a recess 94 provided in the bushing 89 between the ends of the bushing containing the guide slots 91, 91, the opposed and parallel walls 95 which (see Figs. 11 and 12) define the recess 94 being substantially transverse to the length of the guide slots 91, 91 diametrically of the bushing. The front end of the bearing sleeve 88 extends beyond the front end of a bushing 89 and rigidly carries an operating arm 96 disposed externally of the front wall of the bracket-arm 17.

By turning the operating arm 96 from one limit of movement as shown in Fig. 11 to the other limit of movement shown in Fig. 12, a combination turning and sliding movement is imparted to the eccentric 93 within the confines of the walls 95, 95 of the bushing 89 due to the fact that the bearing sleeve 88 which carries the eccentric 93 is confined by the guide slots 91, 91. The described movement of the eccentric 93 carries the bearing sleeve 88 from one end to the other on the guide slots 91, 91 and thereby effects a bodily lateral shifting movement of the angular adjustment axis of the guide head 84 between fixed limits. Obviously the operating

arm 96 may be turned a distance less than that of its full throw, if desired.

The front end of the adjusting shaft 87 extends forwardly beyond the front end of the bearing sleeve 88 and secured thereto by means not herein described, is a hand lever 98 operable to turn angularly the guide head 84 and thereby change the amplitude of needle vibration. For a more complete description and disclosure of the present needle vibration controlling mechanism, reference may be had to the above noted United States patent application Serial No. 356,928.

In connection with the adjusting levers 96 and 98, it is sufficient to say that the member 96 has cooperating therewith an indicia plate 99 having, as best disclosed in Figs. 1, 7 and 8, three indicia characters 100, 101 and 102 of which the character 100 indicates the central or null position of the needle illustrated by the solid lines of Figs. 9 and 11, while the character 101 indicates an extreme left-hand adjustment of the needle as indicated by the solid lines of Figs. 10 and 12. Character 102 illustrates the extreme right-hand position of the needle which is not illustrated in the present drawings.

In the mid-position of the operating arm 96, illustrated in Fig. 11, the fulcrum axis of the adjusting shaft 87 is disposed at mid-position of its movement within the inclined slots 91, 91 of the bushing 89 and the nonvibration path of the needle is located centrally of its field of vibration as illustrated in Fig. 9 of the drawings. In this position of the lever 96, and when the hand lever 98 employed to control the vibration amplitude of the needle is disposed in its lower position as indicated in Fig. 1, the index arrow 105 carried by the handle 99 (see Fig. 1) points to the zero marking on the handle 98 and this is indicative of the fact that upon operation of the machine the needle will be reciprocated in a fixed path which, as above indicated, is located centrally of its field of vibration. This is due to the position of the guideway 83, as shown in full lines in Fig. 9, which is now disposed in a neutral position wherein the guide block 80 idly traverses said guideway 83 in a path P—P so that no appreciable endwise movement is imparted to the pitman 42. If the hand lever 98 is now turned in a counterclockwise direction as viewed in Fig. 1, the guideway 83 will be correspondingly turned angularly into a position of axial influence upon the pitman 42, the center of the guide block 80 now traversing a path P^1, P^2 which extends equal distances to opposite sides of and intersects the angular adjustment of central axis of the guideway 83. Consequently, this action will effect the action of the needle so that the throw of the needle will be at opposite sides of its neutral path of reciprocation in a symmetrical manner. In the described position of the operating arm 96, any positions of the hand lever 98 from zero to maximum throw of the needle will be visually indicated by the index figures carried by the member 98 and the arrow 105 of the member 99.

When the operating arm 96 is turned to its right-hand limit of its movement (see Fig. 12) while the hand lever 98 is in the position illustrated in Fig. 1 the fulcrum axis of the adjustment shaft 87 will be laterally displaced in a direction corresponding substantially to the length of the guideway 83 that is in substantially the path P^1, P^2 illustrated in Fig. 9. As hereinbefore explained, this is due to the fact that the guide slots 91, 91 are elongated in a direction substantially corresponding to the path P^1, P^2.

Referring now to Fig. 10, it will be understood that the lateral shifting of the adjusting shaft 87 from the position illustrated in Fig. 9 has displaced the fulcrum or central axis of the guideway 83 into coincidence with the lower limit of movement of the center of the guide block 84. Consequently, operation of the hand lever 98 now effects angular adjustment of the guideway 83 about said lower point and the guide block 80 has a path of travel bearing from its neutral path P—P to its path P^1, P^2 of maximum influence upon the pitman 42, the neutral path of reciprocation of the needle being entirely at the left-hand side of its field of vibration as shown in Fig. 10.

By the same token, if the handle 96 is moved to its extreme left-hand position of the said indicia device 99, the needle would be shifted to its extreme right-hand position and, thus, the neutral path of reciprocation of the needle will be entirely at the right-hand side of the field of operation all of which is disclosed and described in the above noted pending United States patent application Serial No. 356,928.

From the above, it is to be understood that the present machine as so far described is characterized by having a rotary pattern-cam 64 which is adapted to impart lateral zigzag movements to the needle 30. This cam mechanism is designed in such a manner that various cams may be substituted for the purpose of providing different types of ornamental zigzag stitches. For example, the cam 64 disclosed in Figs. 9 and 10 of the patent drawings is adapted to produce a conventional zigzag stitch whenever the handle 98 is shifted away from its zero position, but, of course, other cams having different peripheral configurations may be substituted for the cam 64 so as to produce various types of motion patterns for the needle. However, in addition to being cam actuated the present machine is provided with means for altering the amplitude of lateral needle vibration and for varying the null or nonvibration position of the needle. In other words, the various selected cams may be employed for imparting divers patterns of lateral motion to the needle but at the same time the amplitude of this motion, as well as the nonvibration position of the needle, may be varied by movement of the handles 96 and 98.

In order to prevent wear of the cam follower 63 and the cam 64 during the time that the machine is adjusted for straight line stitching the present invention contemplates the provision of a cam follower lifting device in the form of a hand lever 106 whose intermediate portion is apertured at 107 so that the member may be rotatably secured upon a pin 108 mounted within an aperture 109 formed in the portion 61 of the bell-crank lever arm 60. The lifting lever 106 is provided at its lower end with a finger portion 110 which, when the lever is turned in a counterclockwise direction as viewed in Fig. 4, is adapted to engage an inclined abutment block 111 formed upon the side wall of the bracket-arm 17. As the finger portion 110 engages the inclined abutment member 111 it will urge the member 61 to move in a counterclockwise direction about its pivot pin 51 whereby the cam follower portion 63 will rise out of contact with the cam 64 so that during straightaway stitching of the machine the cam 64 will not engage the cam follower 63.

As may be observed from Figs. 4 and 5, the lever 106 is provided with a pair of detent-receiving notches 112 and 113 which are adapted to receive a detent pin 114 slidably disposed within an aperture 115 formed within the member 61. A spring 116 located within the bore 115 urges the detent 114 toward the lever 106 while a set screw 117 maintains the spring in its proper position. From this it is to be understood that the detent-receiving notches 112 and 113 respectively lock the handle member 106 in its operative or inoperative positions relative to the inclined abutment block 111.

For reasons which will be hereinafter set forth, the above noted cam follower 63 is formed upon the lower portion of a hand lever 120 which, like the cam follower lifter lever 106, is apertured as at 121 so as to be pivotally secured upon the pin 108 carried by the member 61. The member 120 is also provided with a pair of detent-receiving notches 122 and 123 of which each is adapted to be engaged by a detent member 124 located within a bore 125 of the member 61 so as to be biased by a spring 126 toward the member 120. A set screw 127 maintains the spring 126 in its proper position. From

this it is to be understood that the detent-receiving notches 122 and 123 will function respectively to maintain the member 120 either in its inoperative or operative position relative to the cam 64.

Referring particularly to Figs. 3 and 7, the cam shaft 72 has secured thereto by means of a set screw 130 a cylindrical hub member 131 which carries as an integral part thereof five different rotary cam elements which are designated by the numeral 132. These five cams are rigidly mounted upon the hub 131 so that they will all rotate in synchronism with the shaft 72 and as a consequence with the aforementioned cam 64.

Cooperating with each of the five cams is a separate cam follower lever member 140 having a configuration and a construction substantially similar to that of the lever 120. By referring particularly to Fig. 3, it is to be observed that there are five of these levers 140 of which each is pivotally mounted upon a pin 141 carried between spaced portions 142 and 143 of the bell-crank arm 60 so that each of the lever members 140 may be shifted about the pin in the same manner as the above noted lever member 120. Cooperating with each of these levers 140 is a spring-biased detent pin, designated by the numeral 144, and each of these pins is constructed and is adapted to operate in the exact same manner as is the above noted pin 124.

Each of the members 140 is adapted to be shifted about the pin 141 independently of its associated members and it is designed in the manner of the aforesaid lever 120 to engage an oppositely disposed one of the five rotary cams 132 when the lever is in one position and to be disposed out of contact with the cam when the lever is in its retracted or inoperative position in the same manner as the lever arm 120.

From this it is to be understood that the levers 140 function in the same manner as the lever 120 to cooperate with their oppositely disposed cams 132 and, as a matter of fact, an operator may select any one of the available six cams for operation at any one time or, in the alternative, any combination of these cams may be operatively employed simultaneously merely by throwing the appropriate lever arms into their operative positions. Thus, the present machine is designed to produce a large number of different ornamental stitch patterns as dictated by the peripheral cam portions of the various six cams. Furthermore, various combinations of these cams may be selected to operate in synchronism thus producing cam patterns which are distinctly different from any one of the individual cams themselves. Thus, from one to six cams may be operated either singularly or in various selected combinations.

The cam follower lifting member 106 when thrown to its operative position wherein its finger portion 110 is upon the inclined abutment member 111 functions to raise all of the six cam followers so that they will not engage any of the cams to the end that the followers will not engage the cams during straight stitching operations.

It will also be appreciated that the hand control levers 96 and 98 which control the bight or amplitude of needle-bar vibration will alter the effectiveness of the cams 132 in the exact same fashion that they affect the effectiveness of the cam 64 to the end that these cams may be rendered ineffective by positioning the bight control arm 98 in its so-called zero position, and the width of the stitch pattern produced by any one or a combination of these cams may be affected by the proper adjustment of the lever 96 in the fashion as described hereinabove in connection with the operation of cam 64.

It is to be understood that the above described groups of cams are in effect intelligence record-carrying means having a plurality of different response producing records while the various cam follower elements 120 and 140 are in effect individual intelligence pick-up devices corresponding to each of the response-producing records for sensing and responding to said records in reaction to the relative movements between the pick-up means and the record-carrying means. Also, the bell-crank lever member 49—60 is essentially a mechanism for integrating a plurality of the record responses, while the pitman 42 with its connection means constitutes a transmission mechnism for shifting the needle sidewise in conformance with the integrated record response, and the elements 96 and 98 constitute operator-influenced means for varying the effect of the various record-carrying means.

In order to provide further patterns of ornamental stitches the present invention contemplates the provision of means whereby a needle-controlling cam may be adjusted about its cam shaft. For example, the cam 64 may be replaced by a cam 150 (see Fig. 13) which is provided with two notches 152 and 153, either of which may receive the cam-shaft locating pin 73. For purposes of convenience these notches may be labeled on the cam by the letters "A" and "B." From Fig. 13 it may be observed that the notches 152 and 153 are disposed adjacent dissimilar portions of the cam periphery so that the cam 150 may be mounted upon the shaft 72, in two different effective positions relative to the other cams 132. Thus, the cam 150 may be adjusted about the shaft 72 and relative to the cams 132 to the end that such an adjustment will affect a new ornamental stitch pattern whenever the cam 150 is simultaneously employed in conjunction with any combination of the cams 132.

Naturally, additional pin-receiving notches may be provided in cam 150 so as to provide for further adjustment of the cam about its shaft 72. Such a relative phase shifting of the cams will result in an alteration of the integrated record response of the bell-crank lever arm 49 with the result that a different ornamental stitch will be produced.

Having thus described the nature of the invention, what I claim herein is:

1. An ornamental stitch sewing machine comprising, a frame, a needle mounted in said frame for endwise reciprocation and for sidewise movements transversely of the direction of reciprocation, intelligence record-carrying means carried by said frame and having a plurality of different response-producing records, means for sensing and responding to at least a pair of said records during a continuous predetermined stitching cycle, said last mentioned means including an individual intelligence pick-up device provided for each of said response-producing records for sensing and responding to its associated record in reaction to relative movements between said pick-up device and said record-carrying means, means producing such relative movements in synchronism with the needle reciprocating movements during said cycle, means permanently aligning each pick-up device for sensing and responding to its associated record only, transmission mechanism connected with said needle for shifting said needle sidewise, means connecting each of said pick-up devices with said transmission means, and operator-influenced means carried by said frame for individually rendering each of said pick-up devices operative and inoperative relative to its associated record, and whereby a combined record response may be transmitted to said transmission means and to said needle by rendering operative two or more of said pick-up devices.

2. An ornamental stitch sewing machine comprising, a frame, a needle mounted in said frame for endwise reciprocation and for sidewise movements transversely of the direction of reciprocation, means connected to said needle for shifting the needle sidewise, a plurality of cylindrical rotary cams mounted upon said frame for rotation about a fixed common axis, means for rotating said cams in synchronism with the needle reciprocating movements, a plurality of cam-tracking elements of which each includes an arm and of which each element corre-

1293

sponds to a respective one of said cams for sensing and responding to its associated cam in response to the movements of the cam, means supporting each of said elements upon said frame for shifting movements relative to and independently of its associated elements, means permanently aligning each of said elements for sensing and responding to its associated cam only, and operator-influenced means carried by said frame for selectively establishing an operative connection between said first mentioned means and each of said elements whereby said needle may be shifted sidewise in conformance with selected cam responses of said elements.

3. An ornamental stitch sewing machine comprising, a frame, a needle mounted in said frame for endwise reciprocation and for sidewise movements transversely of the direction of reciprocation, a pitman connected to said needle for shifting the needle sidewise, a plurality of cylindrical rotary cams mounted upon said frame for rotation about a fixed common axis, means for rotating said cams in synchronism with the needle reciprocating movements, a plurality of cam-tracking elements each corresponding to a respective one of said cams, means permanently aligning each of said elements to movement in a single plane, means connecting each of said elements with said pitman thereby to actuate the latter in response to movements of said cams, means for individually shifting each of said elements into and out of cam-tracking relation with its associated cam, said last mentioned means including a plurality of handles each being connected to a respective one of said cam-tracking elements, and spring means carried by said frame and biasing said cam-tracking elements toward engagement with said cams.

4. An ornamental stitch sewing machine comprising, a frame, a needle mounted in said frame for endwise reciprocation and for sidewise movements transversely of the direction of reciprocation, a pitman connected to said needle for shifting the needle sidewise, a plurality of cylindrical rotary edge cams mounted on said frame for rotation about a fixed common axis, means for rotating said cams in synchronism with the needle reciprocating movements, a plurality of cam-tracking elements all pivotally mounted about a common axis with each element corresponding to a respective one of said cams, means permanently aligning each element in radial relation with a respective one of said cylindrical cams, means connecting each of said elements with said pitman thereby to actuate the latter in response to movements of said cams, means for individually shifting each of said elements about said common axis and relative to its associated elements and into and out of cam-tracking position, said last mentioned means including a plurality of handles all pivotally mounted about a common axis and each being connected to a respective one of said cam-tracking elements, and spring means carried by said frame and biasing said cam-tracking elements toward engagement with said cams.

5. An ornamental stitch sewing machine comprising, a frame, a needle mounted in said frame for endwise reciprocation and for sidewise movements transversely of the direction of reciprocation, a pitman connected to said needle for shifting the needle sidewise, a lever pivotally mounted on said frame and about a fixed axis and connected with said pitman by means of a link, a plurality of rotary cams mounted upon said frame for rotation about a fixed common axis, means for rotating said cams in synchronism with the needle reciprocating movements, a plurality of cam-tracking elements all pivotally mounted about a common axis with each element corresponding to a respective one of said cams, means permanently aligning each of said elements in radial relation with a respective one of said cams, means connecting each of said elements with said lever so as to shift the latter about its axis in response to the movements of said cams, means for individually shifting each of said elements about said common axis and relative to its associated elements and into and out of cam-tracking position, said last mentioned means including a plurality of handles of which each is carried upon said lever and is connected to a respective one of said cam-tracking elements, and spring means carried by said frame and biasing said cam-tracking elements toward engagement with said cams.

6. An ornamental stitch sewing machine comprising, a hollow bracket-arm terminating at its free end in a head, a needle mounted in said head for endwise reciprocation and for sidewise movements transversely of the direction of reciprocation, a rotary shaft extending lengthwise of and within said bracket-arm and connected with said needle for reciprocating the latter, a pitman connected to said needle for shifting the needle sidewise, a lever pivotally mounted within said bracket-arm and about a fixed axis and connected with said pitman by means of a link, a cam shaft mounted within said bracket-arm and transversely of said rotary shaft, gears operatively connecting said two shafts, a plurality of rotary cylindrical edge cams disposed within said bracket-arm and mounted upon and for rotation with said cam shaft, a plurality of cam-tracking elements all disposed within said bracket-arm with each element corresponding to a respective one of said cams, means supporting each of said elements upon said frame for shifting movements relative to and independently of its associated elements, means permanently aligning each of said elements for tracking and responding to its associated cam, means connecting each of said cam-tracking elements with said lever so as to shift the latter about its axis in response to the movements of said cams, means for individually shifting each of said cam-tracking elements into and out of cam-tracking relation with its associated cam, said last mentioned means including a plurality of handles of which each is carried upon said lever and is connected to a respective one of said cam-tracking elements and projects out of the bracket-arm through an aperture provided in the bracket-arm, and spring means carried upon said bracket-arm and biasing said cam-tracking elements toward engagement with said cams.

7. An ornamental stitch sewing machine comprising, a hollow bracket-arm terminating at its free end in a head, a needle mounted in said head for endwise reciprocation and for sidewise movements transversely of the direction of reciprocation, a rotary shaft extending lengthwise of and within said bracket-arm and connected with said needle for reciprocating the latter, a pitman connected to said needle for shifting the needle sidewise, a lever pivotally mounted within said bracket-arm and about a fixed axis and conpected with said pitman by a link, a cam shaft mounted within said bracket-arm and transversely of said rotary shaft, gears operatively connecting said two shafts, a plurality of rotary cylindrical edge cams disposed within said bracket-arm and mounted upon and for rotation with said cam shaft, a plurality of cam-tracking elements disposed within said bracket-arm with each of said elements being carried by said lever and corresponding to a respective one of said cams for tracking the same, means supporting each of said elements upon said lever for shifting movements relative to and independently of its associated elements, means permanently aligning each of said elements for movement in a single plane, means for individually shifting each of said elements into and out of cam-tracking relation with its associated cam, said last mentioned means including a plurality of handles of which each is carried upon said lever and is connected to a respective one of said elements and projects out of the bracket-arm through an aperture provided in the bracket-arm, and spring means carried by said bracket-arm and biasing said elements toward engagement with said cams.

8. An ornamental stitch sewing machine comprising, a hollow bracket-arm terminating at its free end in a

head, a needle mounted in said head for endwise reciprocation and for sidewise movements transversely of the direction of reciprocation, a rotary shaft extending lengthwise of and within said bracket-arm and connected with said needle for reciprocating the latter, a pitman connected to said needle for shifting the needle sidewise, a lever pivotally mounted within said bracket-arm and about a fixed axis and connected with said pitman by means of a link, a cam shaft mounted within said bracket-arm and transversely of said rotary shaft, gears operatively connecting said two shafts, a plurality of rotary cylindrical edge cams disposed within said bracket-arm and mounted upon and for rotation with said cam shaft, a plurality of cam-tracking elements disposed within said bracket-arm and pivotally mounted about a common axis with each of said elements corresponding to a respective one of said cams, means permanently aligning each of said elements in radial relation with a respective one of said cams, means connecting each of said elements with said lever so as to shift the latter about its axis in response to the movements of said cams, means for individually pivoting each of said elements about said common axis thereby to shift such element into and out of cam-tracking position with its associated cam, said last mentioned means including a plurality of handles of which each is carried upon said lever and is connected to a respective one of said elements and projects out of the bracket-arm through an aperture provided in the bracket-arm, spring means carried by said bracket-arm and biasing said elements toward engagement with said cams, a pin carried by said pitman, an angularly adjustable guideway carried by said bracket-arm and receiving said pin for translating lateral vibrations of the pitman into endwise movements, and means mounted upon said bracket-arm for angularly adjusting said guideway thereby to alter the pattern of endwise pitman movements.

9. An ornamental stitch sewing machine comprising, a frame, a needle mounted in said frame for endwise reciprocation and for sidewise movements transversely of the direction of reciprocation, a plurality of adjacently disposed rotary edge cams mounted on said frame for rotation about a common axis, means for rotating said cams in synchronism with the needle reciprocating movements, a lever pivotally secured upon said frame and about an axis disposed in parallel relation with the cam axis and being connected with said needle so as to shift the latter sidewise, a spring carried by said frame and biasing said lever toward said cams, a plurality of cam-tracking elements pivotally mounted upon said lever and about a common axis disposed in parallelism with said cam axis with each element corresponding to a respective one of said cams, means permanently aligning each of said elements in radial relation with a respective one of said edge cams, and means for individually pivoting each of said cam-tracking elements about its axis thereby to shift such element into and out of cam-tracking position with its associated edge cam, said last mentioned means including a plurality of handles of which each is connected to a respective one of said elements.

10. An ornamental stitch sewing machine comprising, a frame, a needle mounted in said frame for endwise reciprocation and for sidewise movements transversely of the direction of reciprocation, a pair of rotary cams mounted upon said frame, means rotating said cams in synchronism with the needle reciprocating movements, cam-tracking means carried by said frame for tracking and responding to said pair of cams during a continuous predetermined stitching cycle, transmission mechanism connecting said cam-tracking means with said needle for shifting said needle sidewise in conformance with the combined cam responses of said cam-tracking means, and means enabling said two cams to be phase-shifted relative to each other thereby to alter the stitch patterns performed by the needle.

11. An ornamental stitch sewing machine comprising, a frame, a needle mounted in said frame for endwise reciprocation and for sidewise movements transversely of the direction of reciprocation, a pair of rotary edge cams mounted upon said frame and about a common axis, means rotating said cams in synchronism with the needle reciprocating movements during a continuous predetermined stitching cycle, cam tracking means carried by said frame for tracking and responding to both of said cams during said continuous cycle, transmission mechanism connecting said cam tracking means with said needle for shifting said needle sidewise in conformance with the combined cam responses of said cam-tracking means, and means enabling one cam to be relocated about said common cam axis and relative to its associated cam thereby to alter the stitch patterns performed by the needle.

12. An ornamental stitch sewing machine comprising, a frame, a needle mounted in said frame for endwise reciprocation and for sidewise movements transversely of the direction of reciprocation, an oscillatable lever pivotally mounted about an axis fixed by said frame, said lever connected to said needle for shifting the latter sidewise, a plurality of cylindrical rotary edge cams mounted upon said frame for rotation about a fixed common axis, means rotating said cams in synchronism with the needle reciprocating movements, a plurality of cam-responding elements each corresponding to a respective one of said cams, means mounting each of said elements upon said lever for movements relative to said lever whereby each element may be shifted into and out of cam-responding relation with its associated cam, spring means biasing said lever toward said cams, manually operable means carried by said lever for releasably locking each of said elements against movement relative to said lever and in cam-responding relation with its associated cam whereby said needle may be shifted sidewise in conformance with selected cam responses of said elements, and means permanently aligning each of said cam-responding elements for responding to its associated cam only.

References Cited in the file of this patent

UNITED STATES PATENTS

1,118,411	Grant	Nov. 24, 1914
2,134,417	Reece et al.	Oct. 25, 1938
2,590,907	Van Tuyl et al.	Apr. 1, 1952
2,600,543	Karlsson	June 17, 1952
2,662,424	Sinal	Dec. 15, 1953
2,669,204	Urscheler	Feb. 16, 1954
2,693,778	Harris	Nov. 9, 1954

FOREIGN PATENTS

19,184	Great Britain	of 1908

Disclaimer

2,810,360.—*Martin Richard Perla*, Bridgeport, Conn. ORNAMENTAL STITCH SEWING MACHINES. Patent dated Oct. 22, 1957. Disclaimer filed Mar. 18, 1958, by the assignee, *The Singer Manufacturing Company*.

Hereby enters this disclaimer to claims 8 and 12 of said patent.

[*Official Gazette April 29, 1958.*]

GOVERNMENT'S EXHIBIT 183 (S-44)

Dec. 2, 1958 R. E. JOHNSON 2,862,468

ORNAMENTAL STITCH SEWING MACHINES

Filed Nov. 29, 1954 15 Sheets-Sheet 1

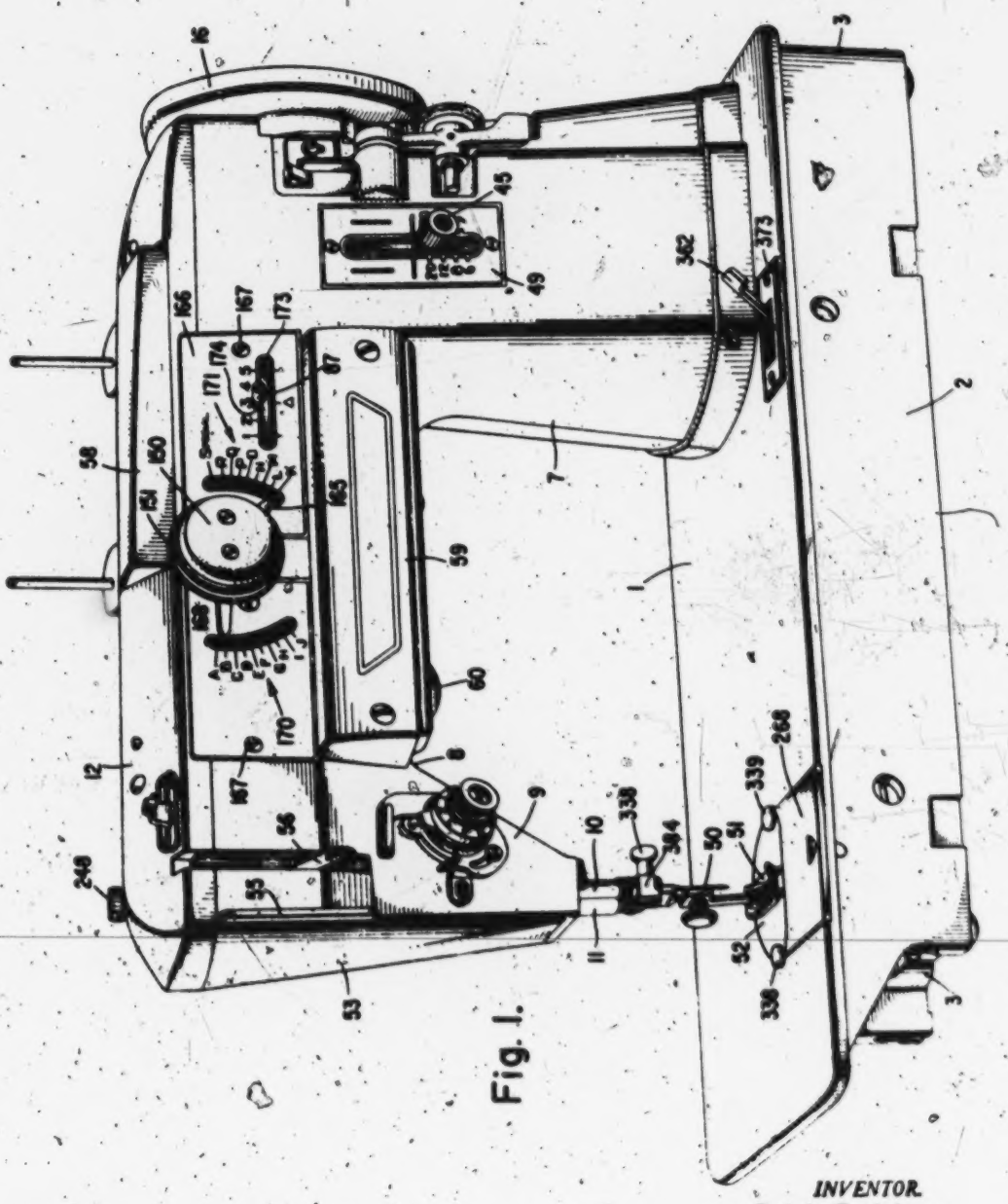

Fig. 1.

INVENTOR.
Ralph E. Johnson

WITNESS

BY J. G. Stanford

ATTORNEY

Dec. 2, 1958

R. E. JOHNSON

2,862,468

ORNAMENTAL STITCH SEWING MACHINES

Filed Nov. 29, 1954

15 Sheets-Sheet 2

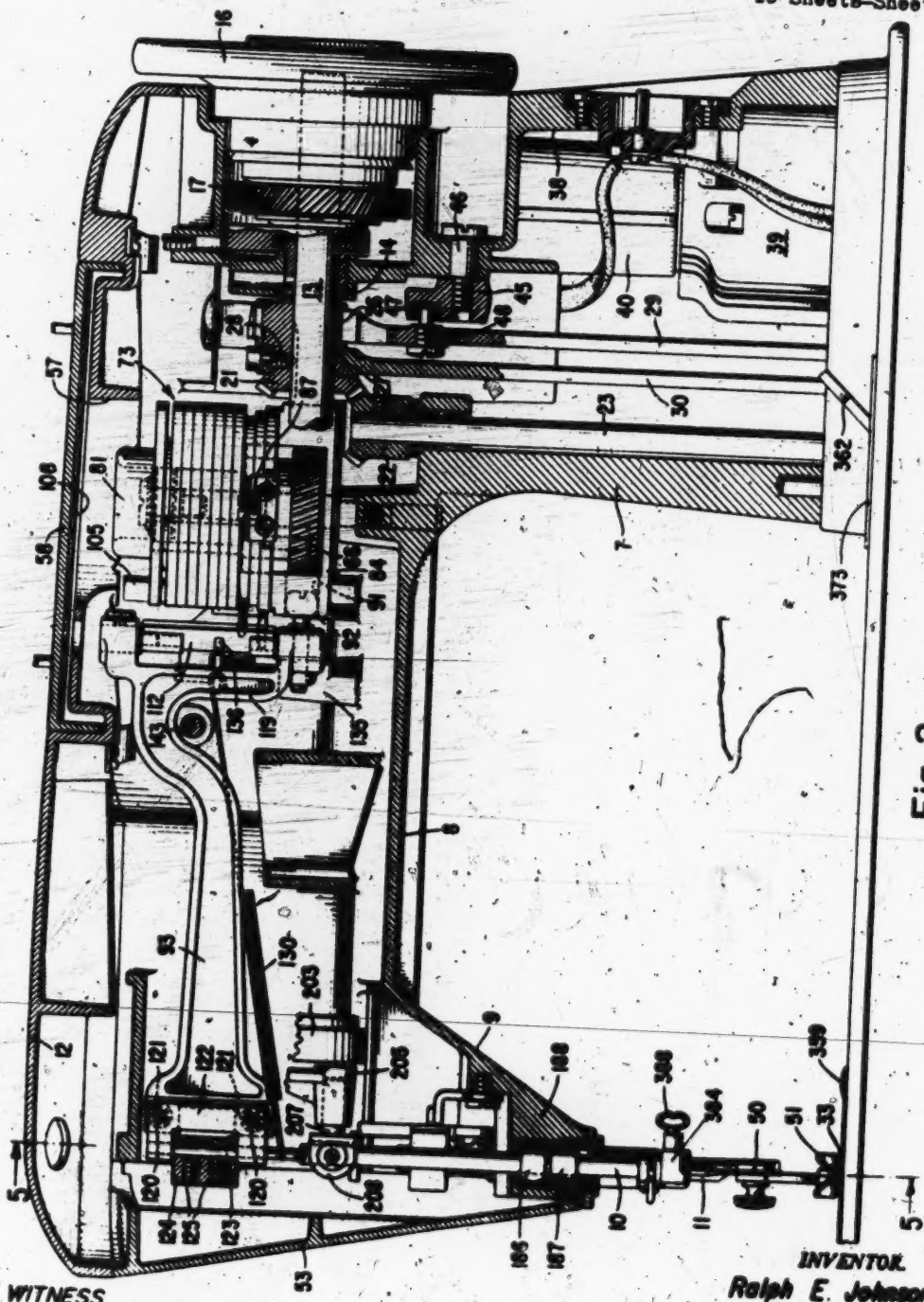

Fig. 2.

WITNESS

Nicholas Leszczak

INVENTOR.

Ralph E. Johnson

BY

ATTORNEY

Dec. 2, 1958 R. E. JOHNSON 2,862,468

ORNAMENTAL STITCH SEWING MACHINES

Filed Nov. 29, 1954 15 Sheets-Sheet 3

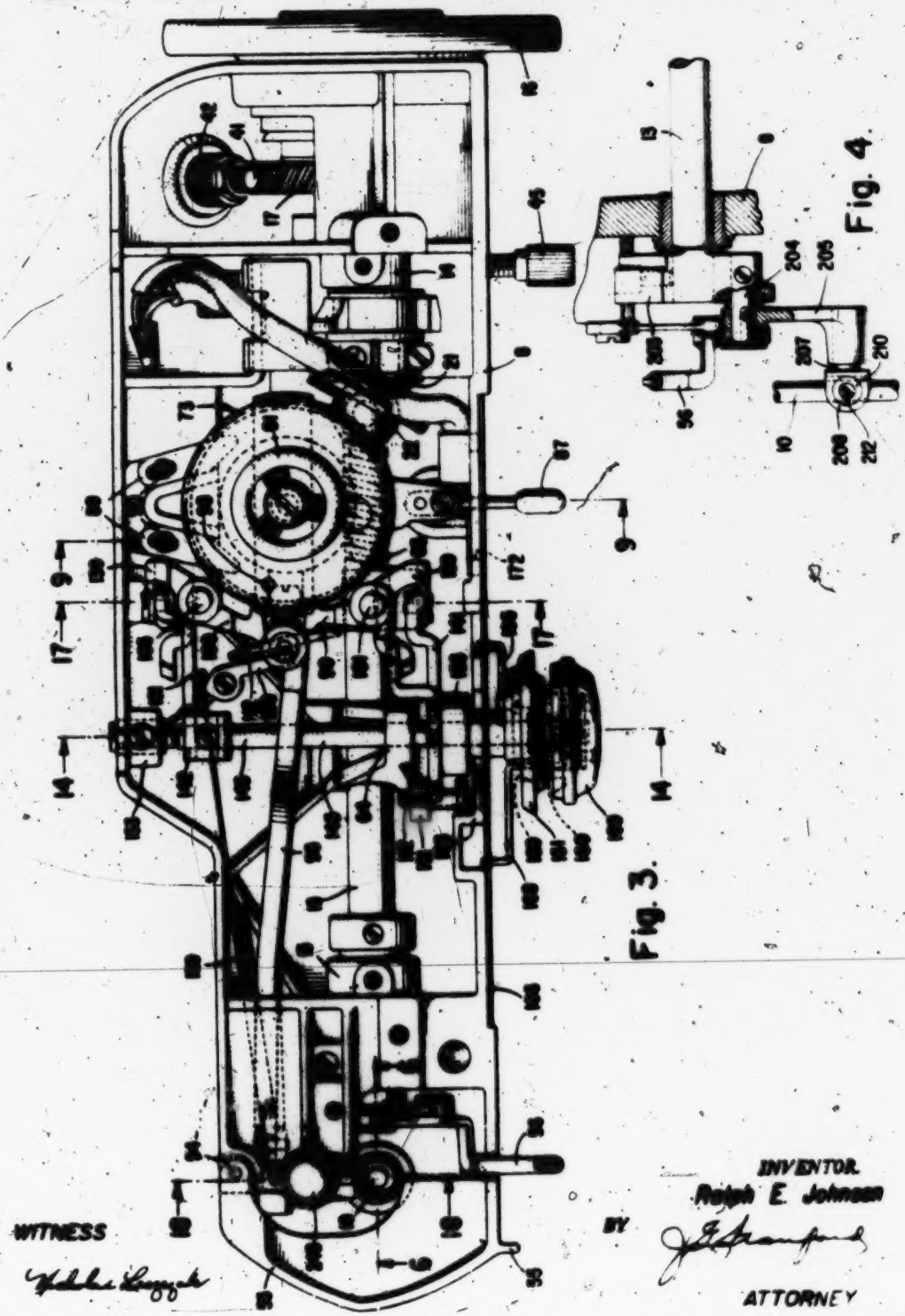

Fig. 4.

Fig. 3.

WITNESS

INVENTOR.
Ralph E. Johnson

BY

ATTORNEY

Dec. 2, 1958 R. E. JOHNSON 2,862,468

ORNAMENTAL STITCH SEWING MACHINES

Filed Nov. 29, 1954 15 Sheets-Sheet 4

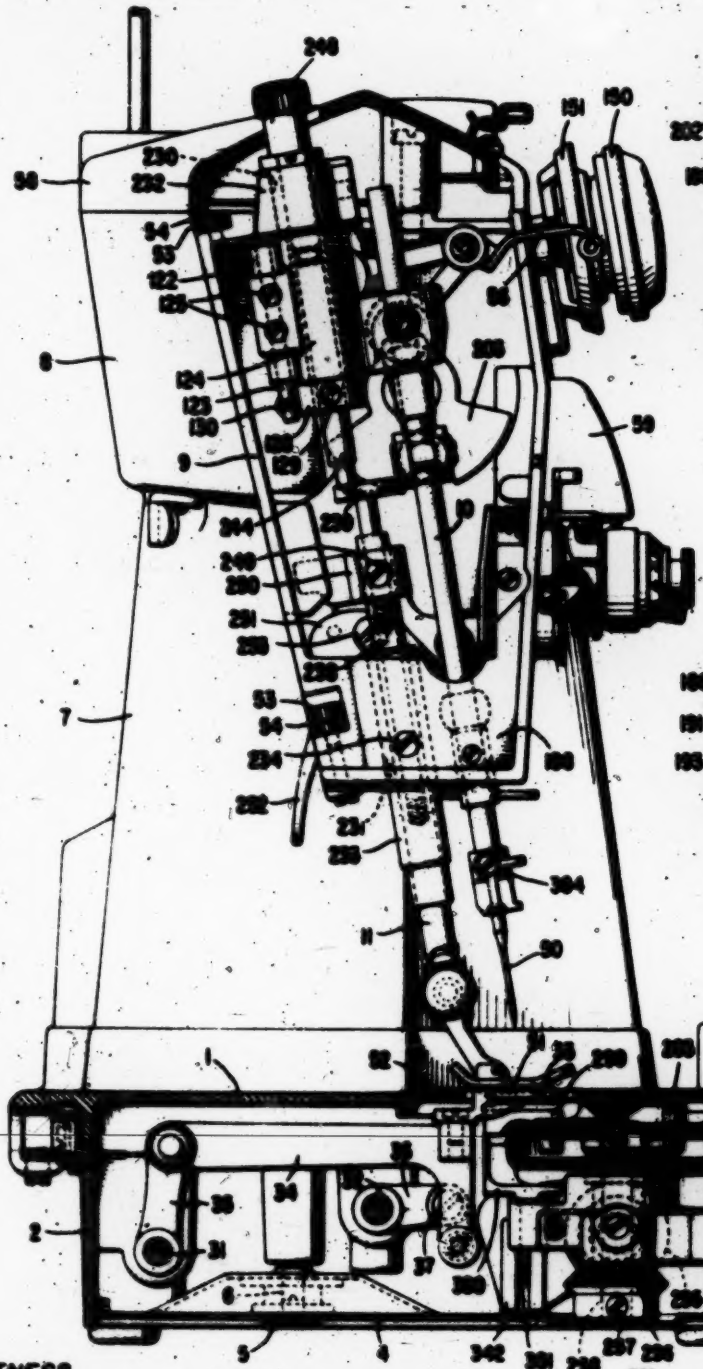

Fig. 5.

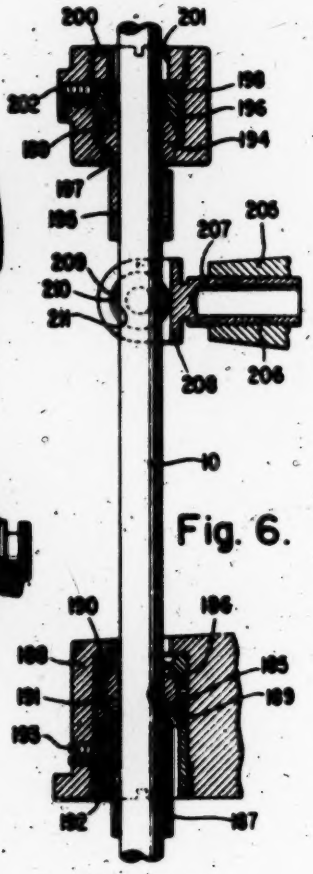

Fig. 6.

WITNESS

INVENTOR.
Ralph E. Johnson

BY

ATTORNEY

Dec. 2, 1958 R. E. JOHNSON 2,862,468

ORNAMENTAL STITCH SEWING MACHINES

Filed Nov. 29, 1954 15 Sheets-Sheet 5

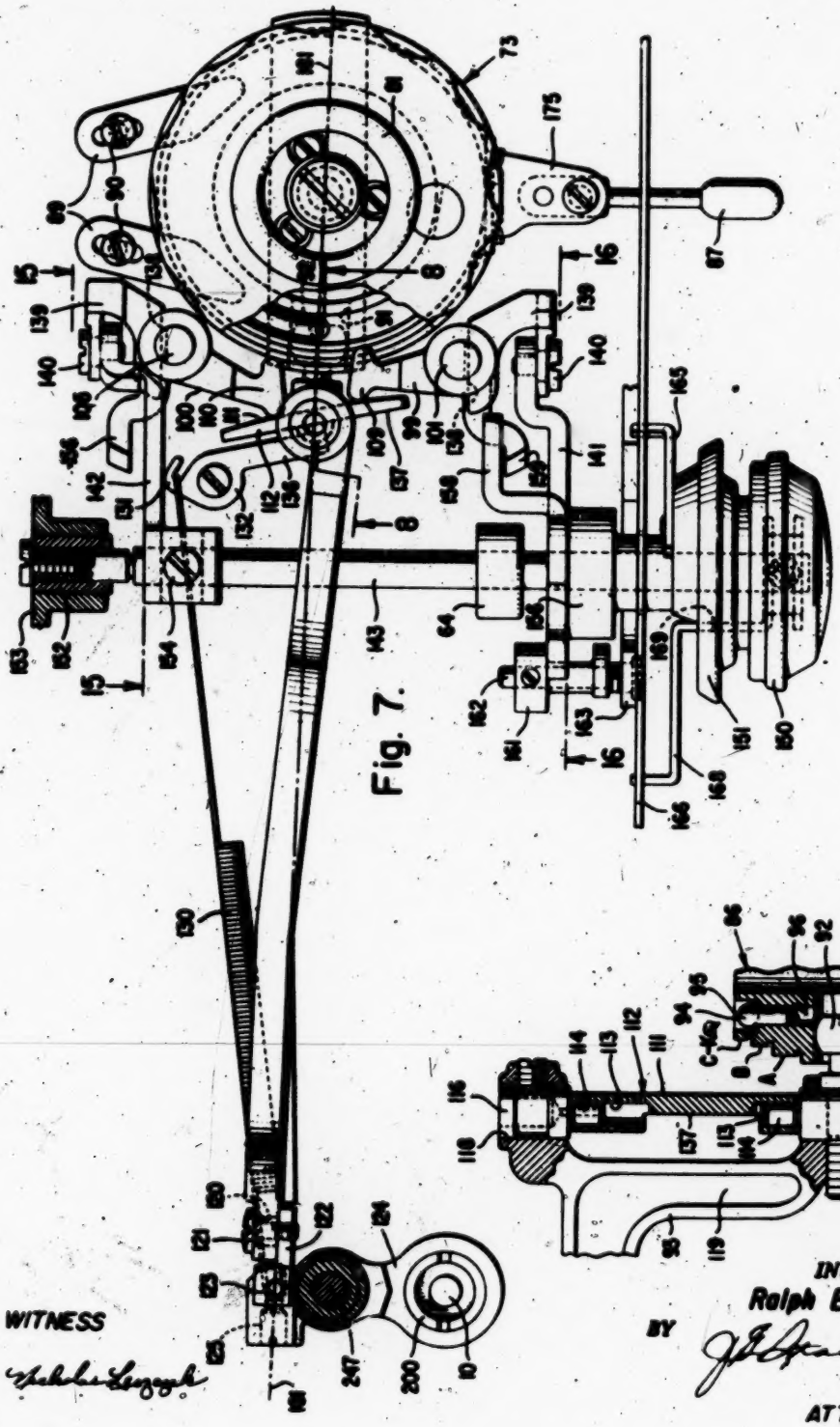

Fig. 7.

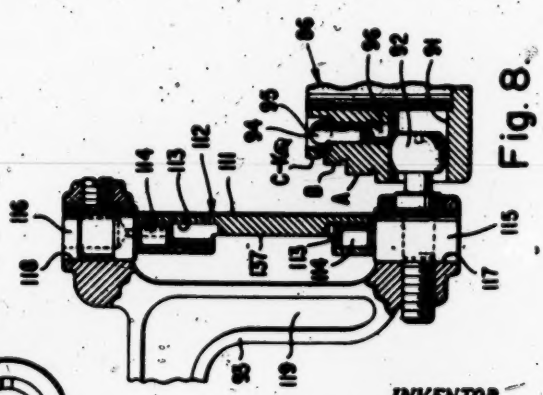

Fig. 8.

WITNESS

INVENTOR.
Ralph E. Johnson

BY

ATTORNEY

Dec. 2, 1958 R. E. JOHNSON 2,862,468

ORNAMENTAL STITCH SEWING MACHINES

Filed Nov. 29, 1954 15 Sheets-Sheet 6

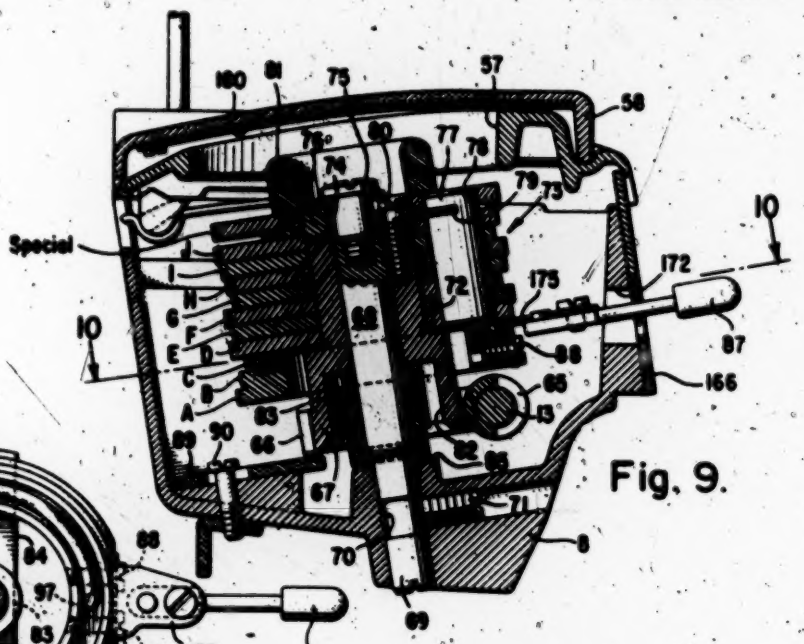

Fig. 9.

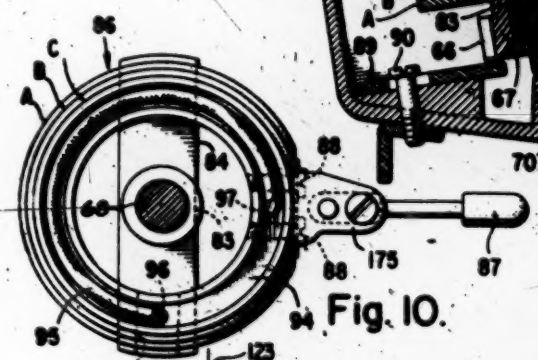

Fig. 10.

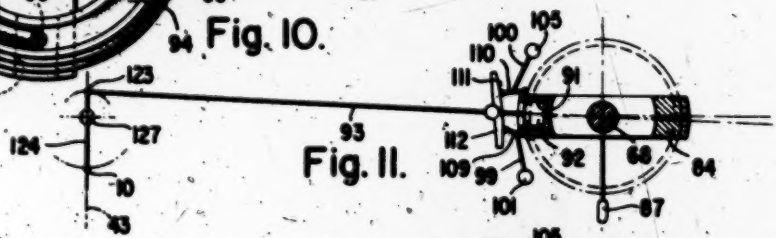

Fig. 11.

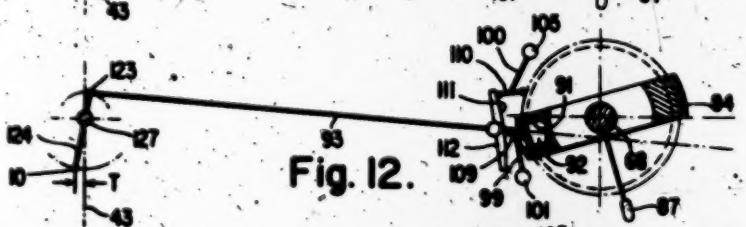

Fig. 12.

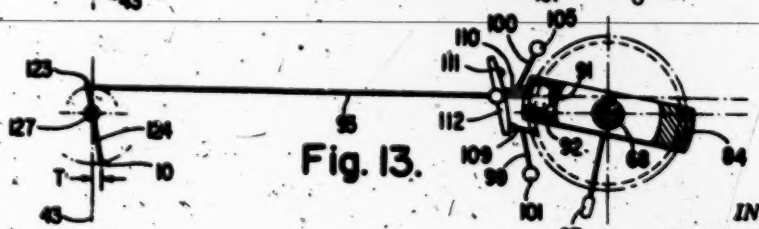

Fig. 13.

WITNESS

INVENTOR.
Ralph E. Johnson
BY

ATTORNEY

Dec. 2, 1958 R. E. JOHNSON 2,862,468

ORNAMENTAL STITCH SEWING MACHINES

Filed Nov. 29, 1954

15 Sheets-Sheet 7

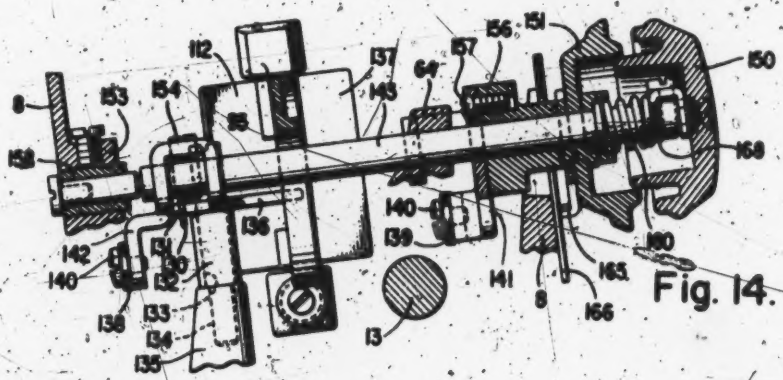

Fig. 14.

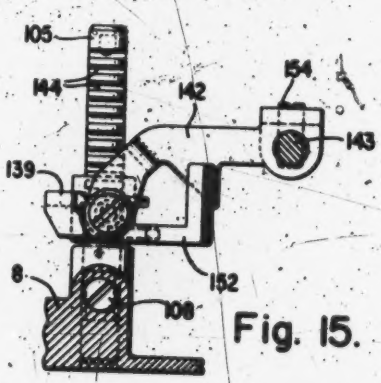

Fig. 15.

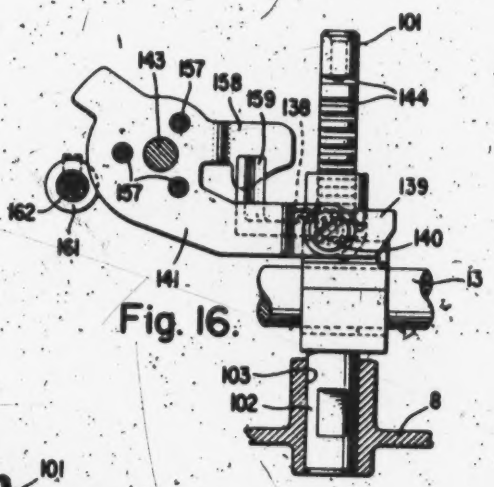

Fig. 16.

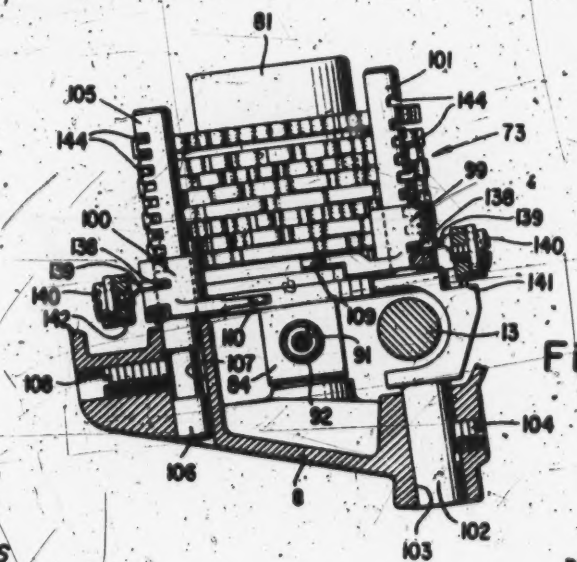

Fig. 17.

WITNESS

Nicholas Leszczak

INVENTOR.
Ralph E. Johnson

BY

ATTORNEY

Dec. 2, 1958 R. E. JOHNSON 2,862,468

ORNAMENTAL STITCH SEWING MACHINES

Filed Nov. 29, 1954 15 Sheets-Sheet 8

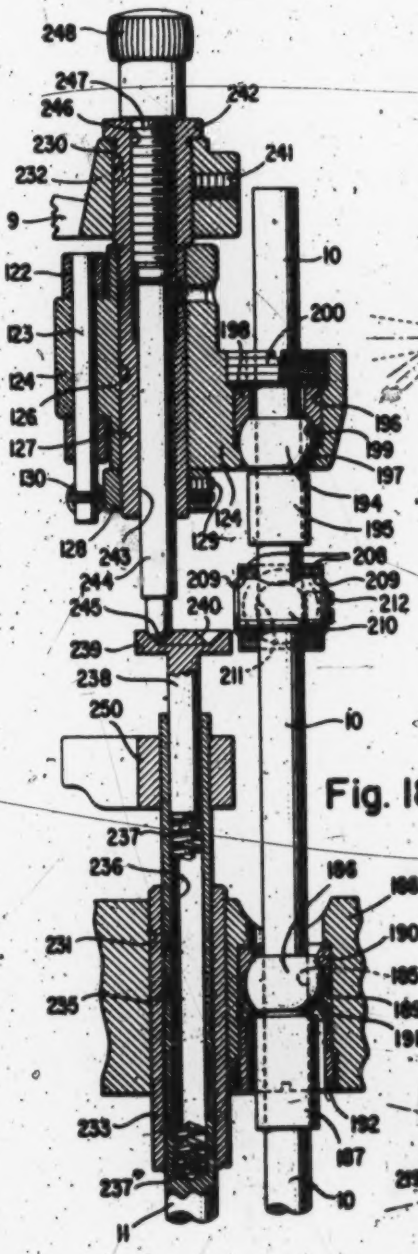

Fig. 18.

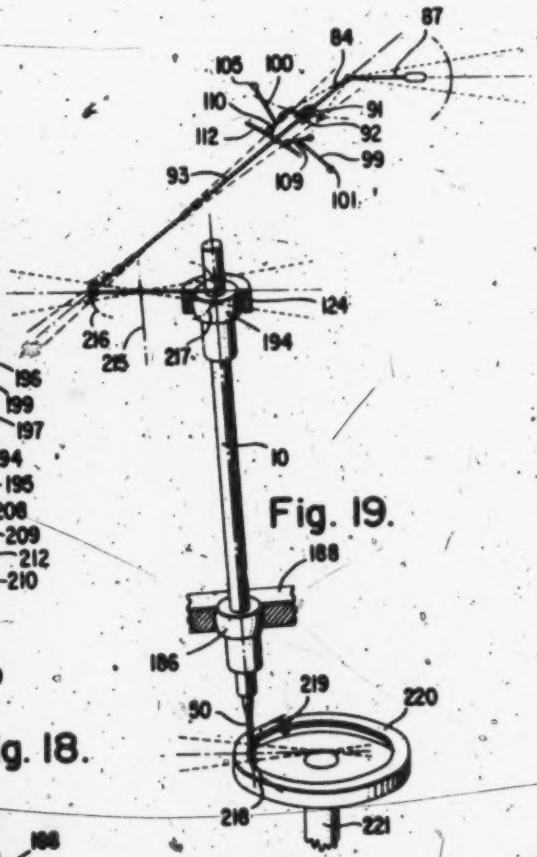

Fig. 19.

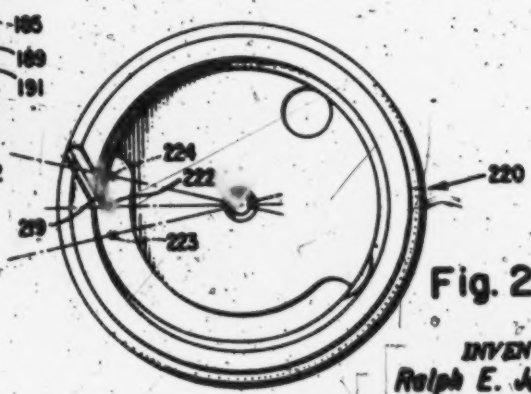

Fig. 20.

INVENTOR.
Ralph E. Johnson
BY
ATTORNEY

WITNESS.

Dec. 2, 1958 R. E. JOHNSON 2,862,468

ORNAMENTAL STITCH SEWING MACHINES

Filed Nov. 29, 1954 15 Sheets-Sheet 9

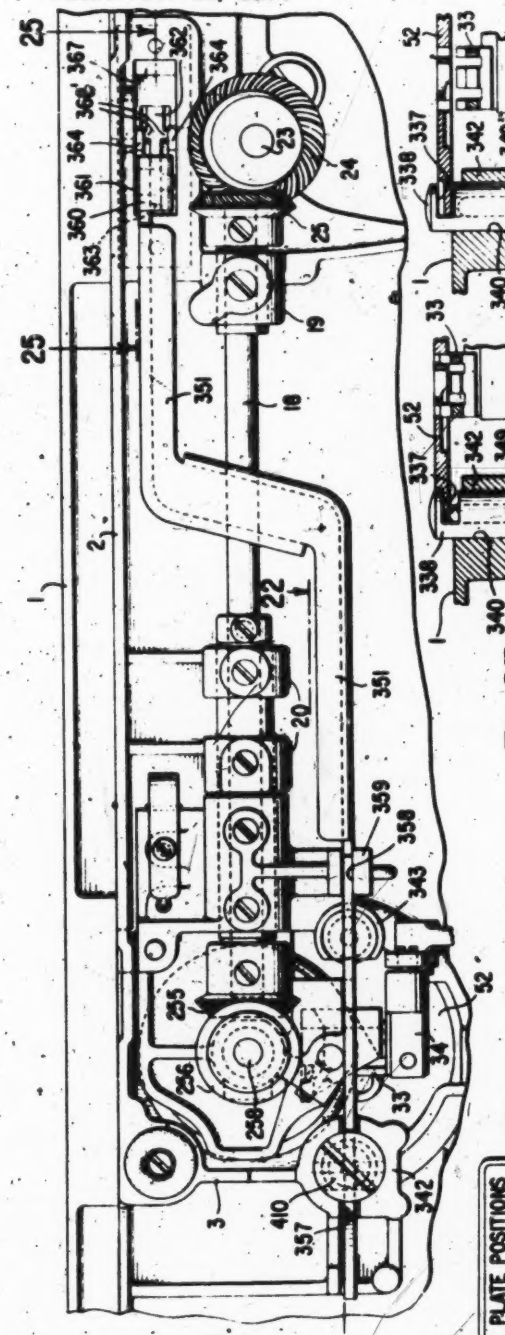

Fig. 21.

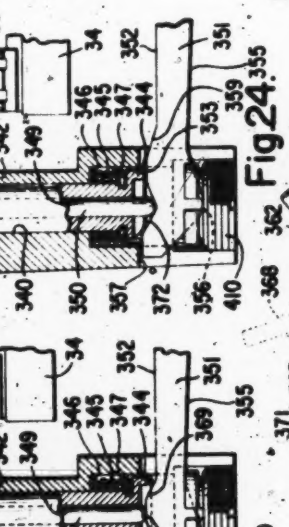

Fig. 23.

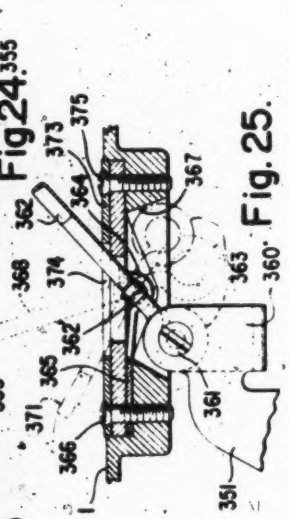

Fig. 25.

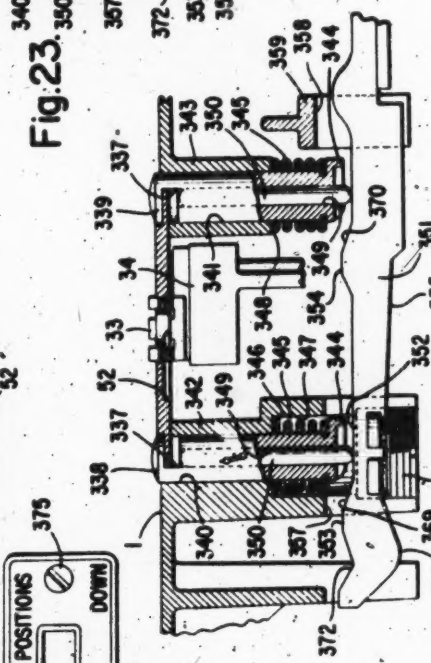

Fig. 22.

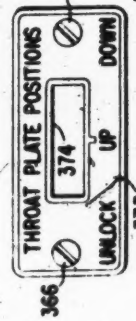

Fig. 26

WITNESS

INVENTOR.
Ralph E. Johnson

BY

ATTORNEY.

Dec. 2, 1958 R. E. JOHNSON 2,862,468

ORNAMENTAL STITCH SEWING MACHINES

Filed Nov. 29, 1954 15 Sheets-Sheet 10

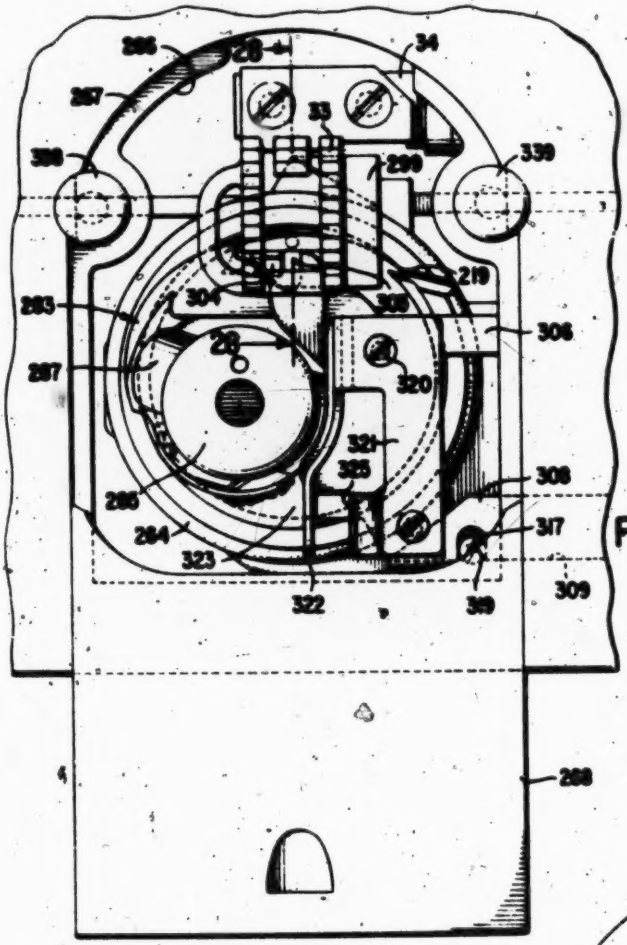

Fig. 27.

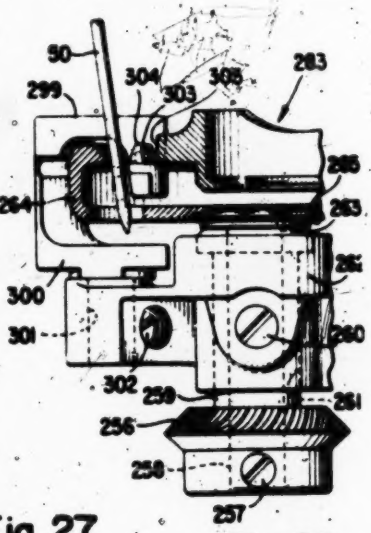

Fig. 28.

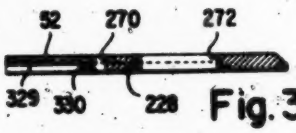

Fig. 31.

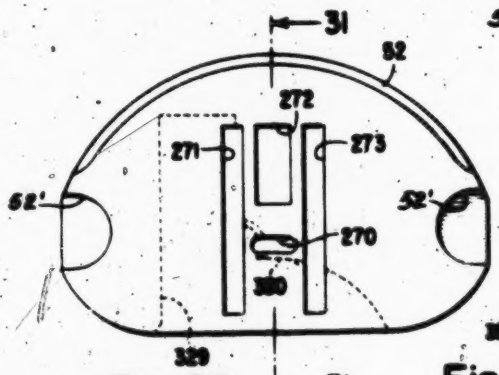

Fig. 29.

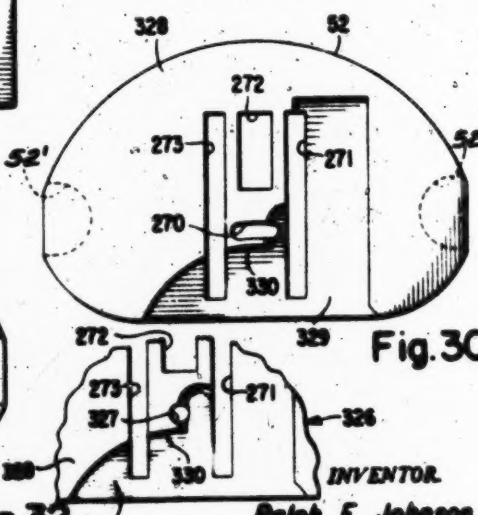

Fig. 30.

Fig. 32.

INVENTOR.
Ralph E. Johnson
BY
ATTORNEY

WITNESS

Dec. 2, 1958 R. E. JOHNSON 2,862,468

ORNAMENTAL STITCH SEWING MACHINES

Filed Nov. 29, 1954 15 Sheets-Sheet 11

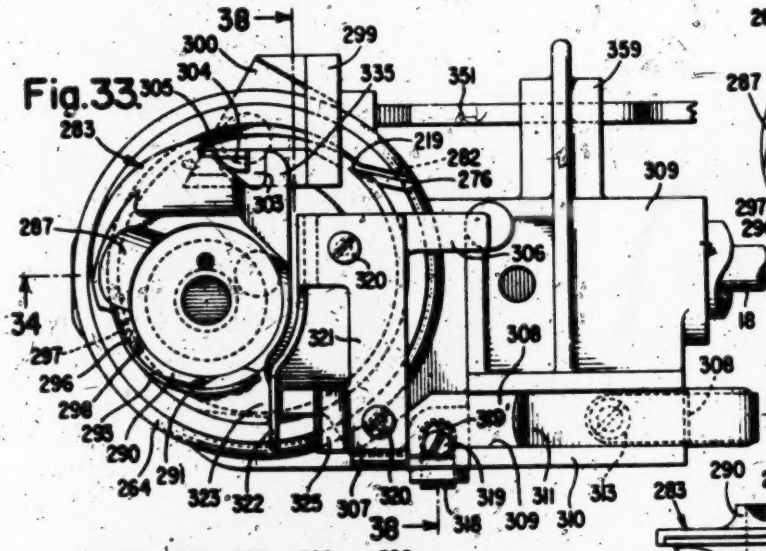

Fig. 33.

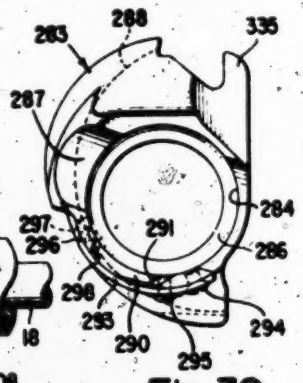

Fig. 39.

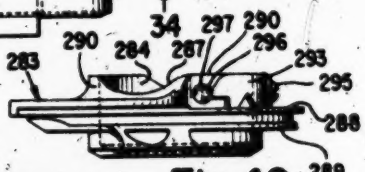

Fig. 40.

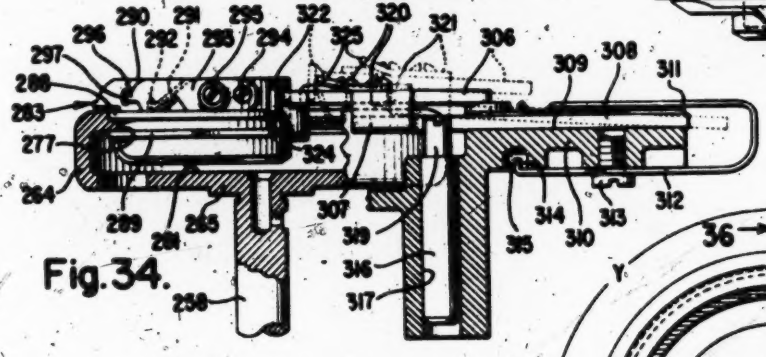

Fig. 34.

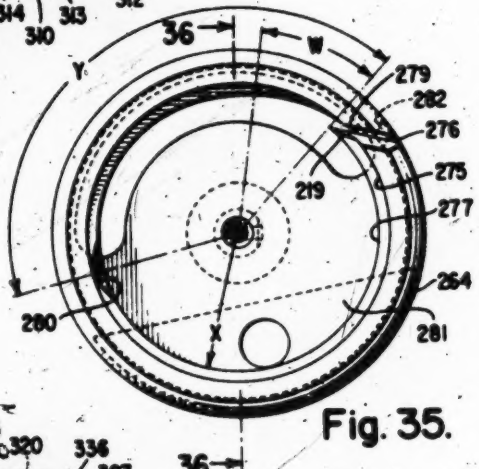

Fig. 35.

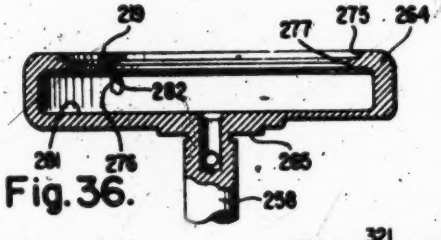

Fig. 36.

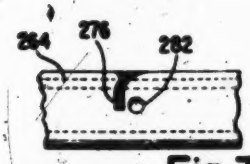

Fig. 37.

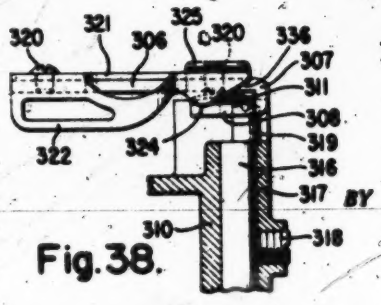

Fig. 38.

INVENTOR.
Ralph E. Johnson

WITNESS

ATTORNEY

Dec. 2, 1958 R. E. JOHNSON 2,862,468

ORNAMENTAL STITCH SEWING MACHINES

Filed Nov. 29, 1954 15 Sheets-Sheet 12

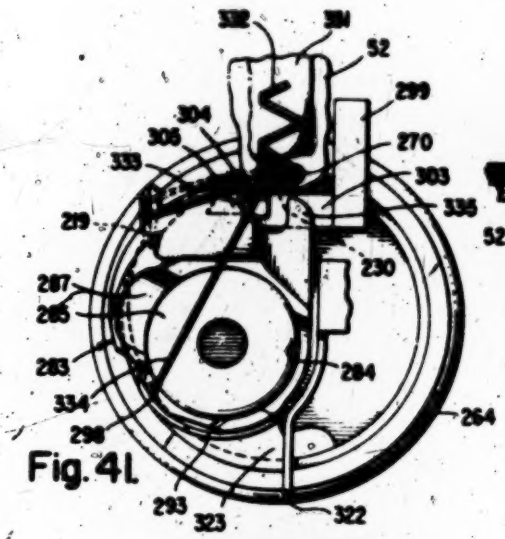

Fig. 41.

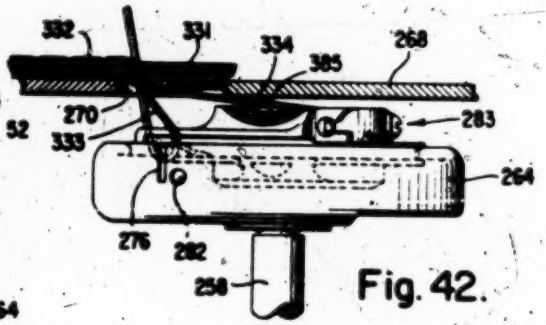

Fig. 42.

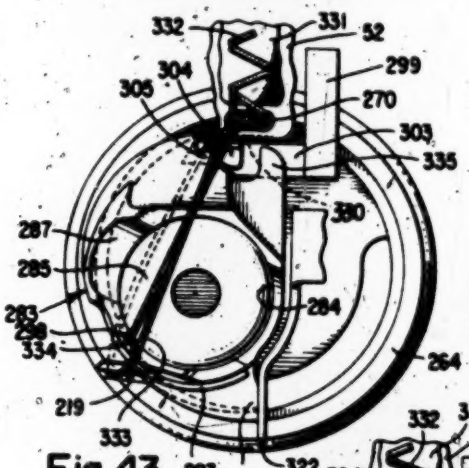

Fig. 43.

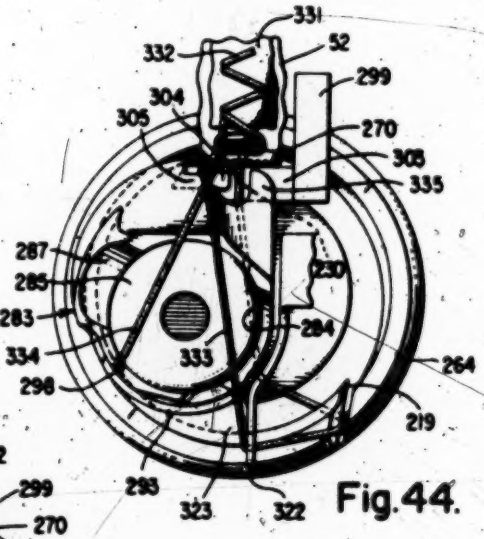

Fig. 44.

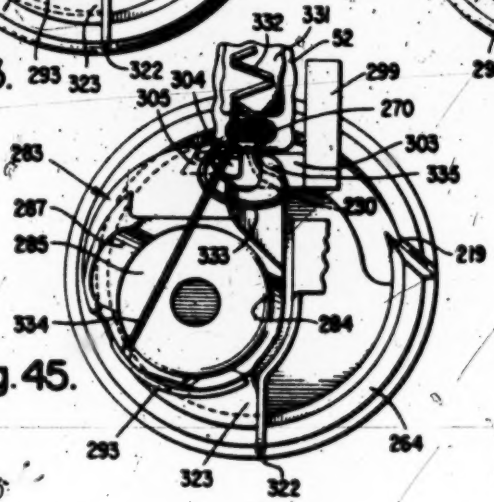

Fig. 45.

WITNESS

Nicholas Leszcz

INVENTOR.
Ralph E. Johnson

BY J. E. Scanford

ATTORNEY

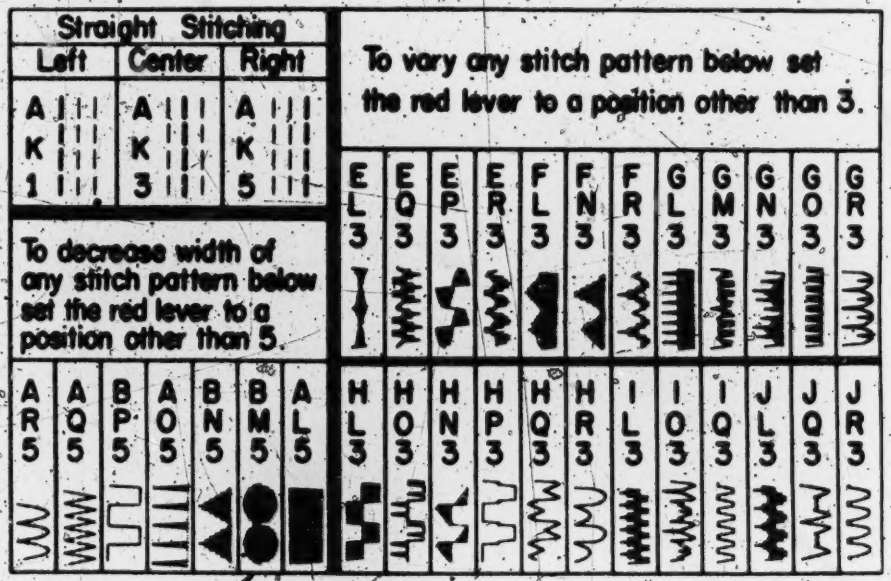

Fig. 46.

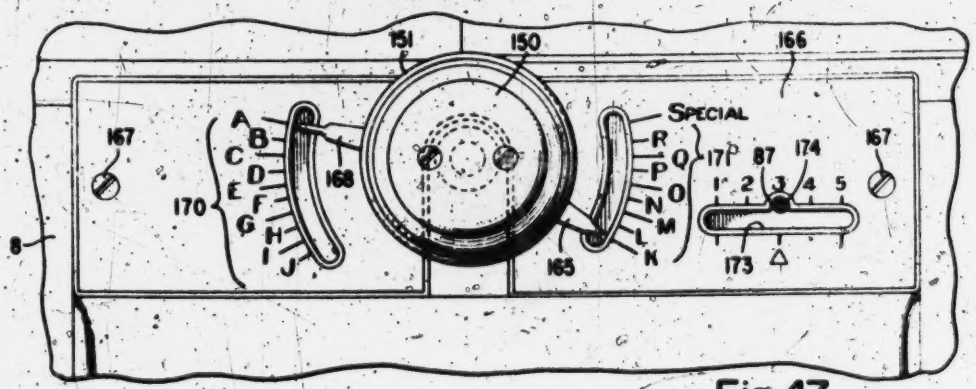

Fig. 47.

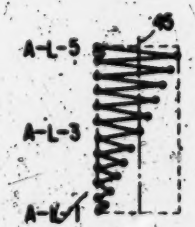

Fig. 48.

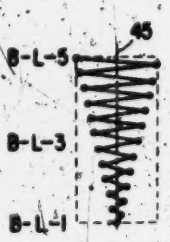

Fig. 49.

Fig. 50.

WITNESS

Nicholas Leszczak

BY

INVENTOR
Ralph E. Johnson

J. E. Stanford

ATTORNEY

Dec. 2, 1958 R. E. JOHNSON 2,862,468

ORNAMENTAL STITCH SEWING MACHINES

Filed Nov. 29, 1954 15 Sheets-Sheet 14

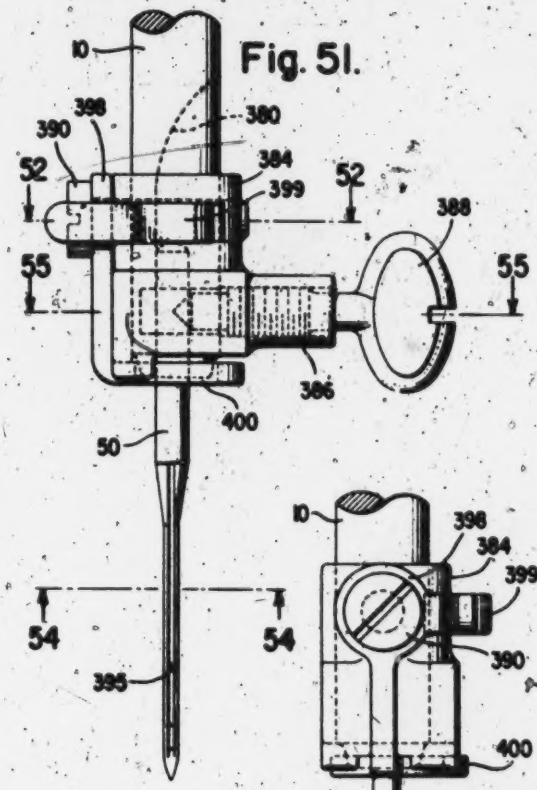

Fig. 51.

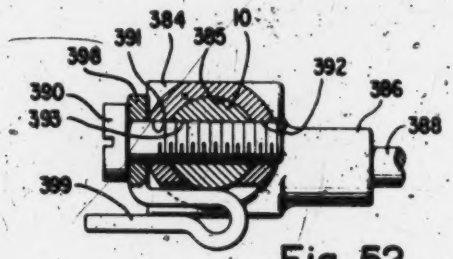

Fig. 52.

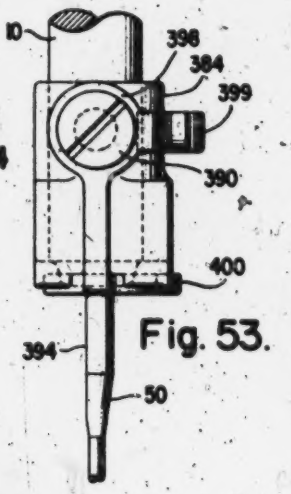

Fig. 53.

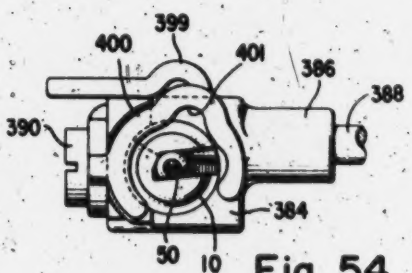

Fig. 54.

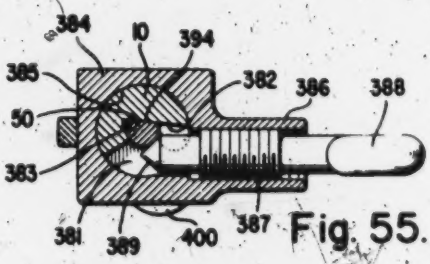

Fig. 55.

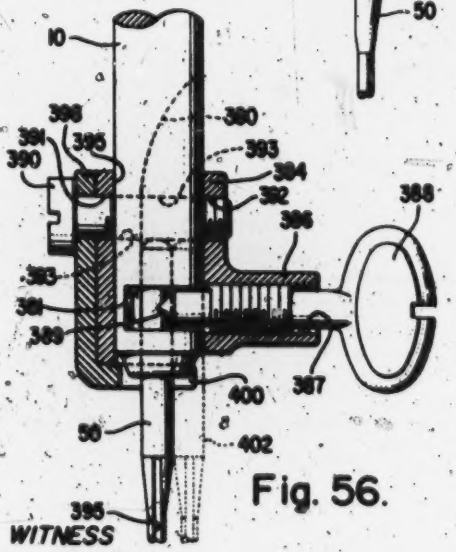

Fig. 56.

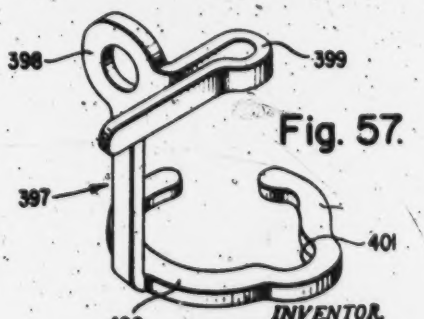

Fig. 57.

WITNESS

INVENTOR.
Ralph E. Johnson
BY
ATTORNEY

Dec. 2, 1958 R. E. JOHNSON 2,862,468

ORNAMENTAL STITCH SEWING MACHINES

Filed Nov. 29, 1954 15 Sheets-Sheet 15

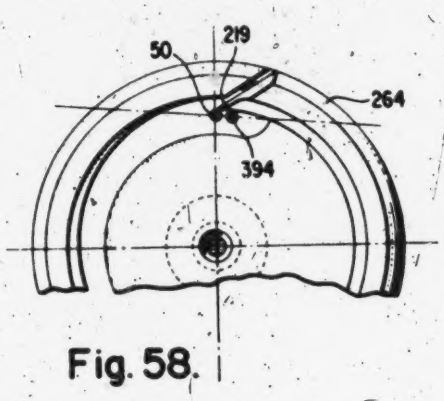

Fig. 58.

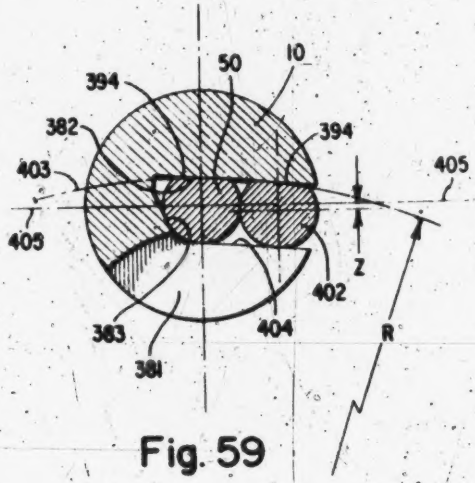

Fig. 59

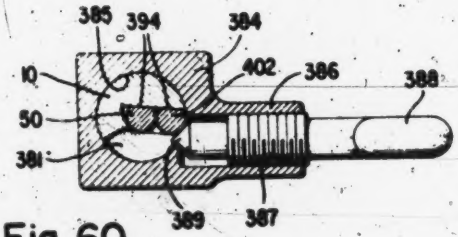

Fig. 60.

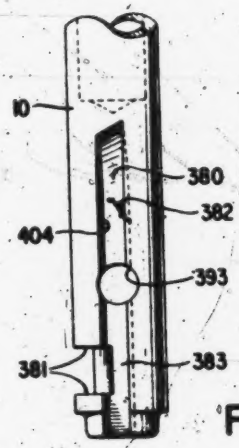

Fig. 61.

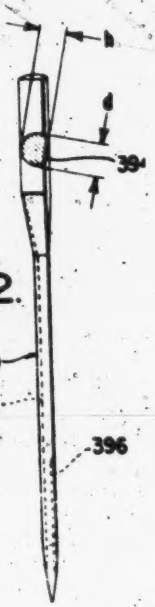

Fig. 62.

WITNESS

INVENTOR
Ralph E. Johnson

BY

ATTORNEY

United States Patent Office

2,862,468

Patented Dec. 2, 1958

2,862,468

ORNAMENTAL STITCH SEWING MACHINES

Ralph E. Johnson, Mountainside, N. J., assignor to The Singer Manufacturing Company, Elizabeth, N. J., a corporation of New Jersey

Application November 29, 1954, Serial No. 471,766

27 Claims. (Cl. 112—158)

This invention relates to improvements in ornamental stitch sewing machines and has for an object to provide such a machine with novel mechanism whereby the machine can be made to produce a large number of ornamental designs without any change in the construction of the machine.

A more specific object of the present invention is to provide a zigzag stitch type ornamental stitch sewing machine with a plurality of different response-producing records for controlling the actions of the zigzag stitch mechanism and means whereby such records may be selectively employed in different combinations for effecting various patterns of ornamental stitches.

Another object of the present invention is to provide a sewing machine with a novel stitch forming mechanism including rotary loop-taker and reciprocatory needle-bar mechanisms which cooperate together in the formation of lock stitches.

Another object of the present invention is to provide a sewing machine with a novel and meritorious presser-bar mechanism for effectively maintaining the work material in proper relation with the work-supporting bed of a sewing machine.

A further object of the invention is to provide a sewing machine with novel means for rendering the work-feeding mechanism ineffective at the will of the operator.

Yet another object of the present invention is to provide a sewing machine with novel means for clamping either one or a pair of needles to a reciprocatory needle-bar mechanism.

With the above and other objects in view, the invention comprises the devices, combinations and arrangements of parts hereinafter described in connection with the accompanying drawings which illustrate a preferred embodiment of the invention from which the several features of the invention and the advantages attained thereby will be readily understood by those skilled in the art.

In the drawings,

Fig. 1 represents a front perspective view of a sewing machine in which the present invention is embodied.

Fig. 2 represents a side elevational view in axial cross-section of the sewing machine illustrated in Fig. 1.

Fig. 3 represents a top plan view of the sewing machine disclosed in Fig. 1 with the cover plate removed therefrom.

Fig. 4 represents a fragmentary elevational view of the actuating drive for the needle-bar.

Fig. 5 represents a sectional view taken substantially along the line 5—5 of Fig. 2.

Fig. 6 represents a sectional view of the machine taken substantially along the line 6—6 of Fig. 3, and illustrating a portion of the needle-bar mechanism.

Fig. 7 represents, on an enlarged scale, a portion of the mechanism as is illustrated in Fig. 3.

Fig. 8 represents a sectional view taken substantially along the line 8—8 of Fig. 7.

Fig. 9 represents a sectional view taken substantially along the line 9—9 of Fig. 3.

Fig. 10 represents a sectional view taken substantially along the line 10—10 of Fig. 9.

Figs. 11, 12 and 13, inclusive, represent diagrammatic views illustrating various positions of the mechanism disclosed essentially in Fig. 7.

Fig. 14 represents, on an enlarged scale, a sectional view taken substantially along the line 14—14 of Fig. 3.

Fig. 15 represents, on a reduced scale, a sectional view taken substantially along line 15—15 of Fig. 7.

Fig. 16 represents, on a reduced scale, a sectional view taken substantially along the line 16—16 of Fig. 7.

Fig. 17 represents, on a reduced scale, a sectional view taken substantially along the line 17—17 of Fig. 3.

Fig. 18 represents, on an enlarged scale, a sectional view taken along the line 18—18 of Fig. 3.

Fig. 19 represents a diagrammatic view illustrating the paths of movement through which the needle-bar is operated with respect to the rotary loop-taker and the needle-bar actuating mechanism.

Fig. 20 represents a top plan view of the rotary loop-taker with its internal mechanisms removed therefrom.

Fig. 21 represents, on an enlarged scale, a fragmentary bottom plan view of the machine as illustrated in Fig. 1 with the bottom cover plate removed therefrom.

Fig. 22 represents, on an enlarged scale, a sectional view taken substantially along the line 22—22 of Fig. 21.

Figs. 23 and 24 represent a portion of the throat-plate lifting mechanism in different stages of its operation.

Fig. 25 represents, on an enlarged scale, a sectional view taken substantially along the line 25—25 of Fig. 21.

Fig. 26 illustrates an indicia plate which, as illustrated in Fig. 1, is adapted to be secured to the bed of the sewing machine proper.

Fig. 27 represents a top plan view of a fragmentary portion of the sewing machine bed illustrating a portion of the bed with its slide plate partially removed and with its throat plate entirely removed so as to expose the loop-taking mechanism.

Fig. 28 represents a sectional view taken substantially along the line 28—28 of Fig. 27.

Fig. 29 represents a top plan view of a throat-plate which is provided with an aperture adapted for the reception of a laterally vibratory needle.

Fig. 30 represents a bottom plan view of the throat-plate illustrated in Fig. 29.

Fig. 31 represents a sectional view taken substantially along the line 31—31 of Fig. 29.

Fig. 32 represents a fragmentary bottom plan view comparable to Fig. 30 but illustrating a throat-plate of the type having a circular aperture adapted for the reception of a needle which is not shifted laterally.

Fig. 33 represents a top plan view of the rotary loop-taking mechanism, together with the means whereby the bobbin carrier is maintained in proper position within the rotary loop-taker.

Fig. 34 represents a sectional view taken substantially along the line 34—34 of Fig. 33.

Fig. 35 represents a top plan view of the rotary loop-taking element.

Fig. 36 represents a sectional view taken substantially along the line 36—36 of Fig. 35.

Fig. 37 is a fragmentary view of a portion of the rotary loop-taker and illustrating the manner in which the hook beak is formed.

Fig. 38 represents a fragmentary sectional view taken substantially along the line 38—38 of Fig. 33.

Fig. 39 represents a top plan view of the bobbin carrier

Fig. 40 represents a front elevation view of the bobbin carrier disclosed in Fig. 39.

Fig. 41 represents a top plan view of the rotary loop-taker and illustrating a portion of the work-supporting bed and a piece of work material with the loop-taker being shown as having just caught the needle-thread loop.

Fig. 42 represents an elevation view taken of the left side of the loop-taker as illustrated in Fig. 41.

Fig. 43 is similar to Fig. 41, but illustrates the rotary loop-taker as having rotated about the bobbin-carrier so as to expand the needle-thread loop about the latter element.

Fig. 44 represents a top plan view similar to that disclosed in Figs. 41 and 43 and illustrating the loop-taker in that position wherein the needle-thread loop has been expanded about the bobbin-carrier and is in a position where it is about ready to be cast off from the bobbin-carrier.

Fig. 45, like Figs. 41 to 44 inclusive, illustrates a top plan view of the rotary loop-taker and shows the loop-taker in the position it assumes just after the needle-thread loop has been cast off the bobbin-carrier and is being taken up by the so-called needle-thread take-up mechanism.

Fig. 46 represents an instruction plate of the type secured to the interior portion of the top cover plate for the purpose of instructing the operator in the setting of the various controls for the ornamental stitch mechanism of the present machine.

Fig. 47 represents an elevational view of the indicia plate which surrounds the hand contro's of the present machine.

Figs. 48, 49 and 50 each illustrates a pattern of ornamental stitching which may be produced on the present machine.

Fig. 51 represents a side elevational view of a portion of the sewing machine needle-bar and its associated needle clamp.

Fig. 52 represents a sectional view taken substantially along the line 52—52 of Fig. 51.

Fig. 53 represents a left side elevational view of the mechanism disclosed in Fig. 51.

Fig. 54 represents a sectional view taken substantially along the line 54—54 of Fig. 51.

Fig. 55 represents a sectional view taken substantially along the line 55—55 of Fig. 51.

Fig. 56 represents a vertical sectional view of the mechanism disclosed in Fig. 51.

Fig. 57 represents a perspective view of a needle-thread guide element which is adapted to be secured to the needle clamp mechanism in a manner as is best disclosed in Fig. 51.

Fig. 58 represents a fragmentary top plan view of the rotary loop-taker mechanism and shows the relation between the twin needles and the loop-taker.

Fig. 59 represents a view similar to Fig. 55 and shows the needle-bar clamp as provided with a pair of twin needles.

Fig. 60 is similar to Fig. 55 but illustrates the needle-clamping mechanism as being provided with two needles instead of one.

Fig. 61 represents a right side elevational view of the needle bar shown in Fig. 51.

Fig. 62 represents a side elevational view of a typical type of sewing machine needle which is employed in the present machine.

General sewing machine structure

As illustrated in the drawings, the frame of the sewing machine in which the present invention is incorporated comprises a substantially rectangular shaped base 1 forming at its upper side a work-supporting surface or bed plate and provided at its under side with a plurality of downwardly extending side walls 2—2 and end walls 3—3 forming a box-like enclosure, the downwardly facing opening of which is normally closed by a bottom cover plate 4 held in place by a thumb nut 5 threaded over a stud 6 extending downwardly from the under face of the base 1.

Suitably secured upon the hollow bed 1 is a vertically disposed hollow standard 7 which carries an overhanging bracket-arm 8 terminating in a hollow head 9 in which is mounted a reciprocatory needle-bar 10 and presser-bar 11. The upper part of the bracket-arm 8 is closed by a cover-plate 12 held in place by screws not herein shown. A main driving shaft 13 disposed within and lengthwise of the overhanging bracket-arm 8 is journaled in bearings 14 and 15 (see Figs. 2 and 3) which are secured in the sewing machine frame forming a part of the bracket-arm 8. The arm standard end of the shaft 13 is connected with a hand wheel 16 in a manner which is best disclosed in U. S. Patent No. 2,617,375, dated November 11, 1952.

Also secured to the main shaft 13 in a manner as is disclosed in the above noted patent is a gear 17. The main shaft 13, as is hereinafter described in more detail, drives the needle-bar 10 carried in the head 9. A loop-taker actuating shaft 18 (see Fig. 21) journaled in suitable bearings 19 and 20 mounted in the base of the machine is driven by the main shaft 13 through bevel gears 21 and 22, shaft 23, and bevel gears 24 and 25. A pair of actuating eccentrics 26 and 27 are formed integral with the gear 21 and the combination is held in place upon the shaft 13 by a set screw 28. The eccentrics 26 and 27 actuate pitmans 29 and 30 respectively, and these in turn actuate rock-shafts 31 and 32 (see Fig. 5) in a conventional manner. These rock-shafts 31 and 32 impart the usual feeding movements to a conventional feed-dog 33 by way of a feed-bar 34 which is connected with the shafts 31 and 32 by cranks 35 and 36 of which the latter is connected to the bar 34 by means of a link 37.

The arm standard 7 is especially designed to provide adequate space for housing sewing machine parts. To this end, the arm standard is made in substantially the shape of a pyramid, the lower portion of the standard being larger than the upper portion. Within the lower portion of the standard is provided a housing generally designated by the numeral 38 in which is mounted a vertically disposed electric motor 39. As is best disclosed in the above noted Patent No. 2,617,375, the arm standard 7 of the present machine is provided with a hollow cylindrical wall portion 40 for receiving the extended distal end of the motor drive shaft, the upper portion of which is designated by the numeral 41 and is illustrated in Fig. 3. This distal end portion 41 of the main shaft carries a spiral gear 42 which meshes with the gear 17 carried by the main shaft 13 for the purpose of driving the main shaft 13. From this, it is to be understood that the motor 39 functions to drive the main shaft 13 which, through the medium of the upright shaft 23 and the pitmans 29 and 30, actuates the lower rotary shaft 18, as well as the feed rock-shafts 31 and 32.

As may be best seen in Fig. 1, the present machine is provided with a conventional form of stitch-length control lever 45 which projects into the hollow standard 7 and is pivotally mounted therein upon a pivot pin 46 and is formed with a guideway 47 which is tracked by a pin 48 carried by the pitman 29. Thus, as the lever 45 is shifted about the pin 46, it will lengthen or shorten the effective throw of the feeding mechanism or reverse the action thereof all in a manner which is well known. Co-operating with the hand lever 45 is an indicia plate 49 which affords the operator a visual indication as to the stitch-length setting.

Referring to Fig. 1, the needle-bar 10 is provided with a conventional eye-pointed needle 50 which is adapted to cooperate in the formation of lock-stitches with a rotary loop-taker disposed beneath the bed-plate 1. Mounted upon the lower end of the presser-bar 11 is a conventional

type of presser-foot 51 which cooperates with a throat-plate 52 and the feed-dog 33 in the feeding of the work over the work-support 1 and away from the operator. The throat-plate 52 is carried by the work-support 1.

Referring particularly to Figs. 1, 2 and 3, the open end of the head 9 is covered over by means of a face-plate 53 which is hinged to the rear portion of the frame 9 by means of vertical pins 54, 54 (see Figs. 3 and 5), whereby the plate 53 may be grasped by an ear 55 and swung back and forth from an opened to a closed position thereby to provide access to the internal portion of the head 9.

The forward end portion of the main shaft 13 extends in the conventional manner into the hollow head 9 for the purpose of reciprocating the needle-thread take-up arm 56.

Referring particularly to Figs. 1 and 2, an intermediate portion of the cover-plate 12 is provided with an opening 57 which is normally closed by a plate 58 which is hinged in a manner not herein shown at its rearward portion thereby to permit the operator to gain access to the internal portion of the machine for purposes which will hereinafter be described.

With reference to Fig. 1, the intermediate portion of the bracket-arm 8 is provided with a light shade 59 beneath which is disposed the usual sewing light bulb 60, which lighting mechanism together with its shade 59 is shown in the U. S. Patent No. 2,677,042, dated April 27, 1954.

Ornamental stitch mechanism

The machine, in accordance with the present invention, comprises a zigzag type of needle-bar 10 which is adapted, in addition to being reciprocated in a direction of its length, to be periodically shifted back and forth laterally of the direction of work feed to produce in cooperation with the rotary loop-taker zigzag stitches. In accordance with the present invention, the machine is provided with a group of stacked or nested cams which are rotated in synchronism with the movements of the needle-bar, a pair of cam followers which are adapted to track various combinations of the cams, and means for integrating the movements of the two cam followers and for transferring such integrated movements to the needle-bar mechanism for the purpose of moving it back and forth laterally of the direction of needle feed. Also, the present machine is provided with operator-influenced means for shifting the cam followers thereby to permit the operator to select various cams for the purpose of effecting different patterns of movement of the needle-bar. It is to be particularly understood that each of the cams of the group of cams is different from its associate cams so that each cam in effect represents a different pattern of ornamental stitch movement of the needle-bar. In this connection, it is to be further appreciated that with two cam followers various cams may be selected to operate simultaneously to the end that a great variety of ornamental stitches may be performed with the present mechanism.

Referring particularly to Figs. 2, 3, 7 and 9, the main rotary shaft 13 is provided intermediate its ends with a worm gear 65 which meshes with a wheel gear 66 formed integrally with a sleeve 67 rotatably mounted upon a cylindrical stud 68 whose lower portion 69 is mounted within an aperture 70 formed in the bracket-arm 8. A set screw 71 locks the member 69 in a fixed position. From this, it is to be understood that rotation of the main shaft 13 will, through the gears 65 and 66, rotate the sleeve 67 about the member 68.

Referring particularly to Fig. 9, the sleeve 67 is provided with a shoulder 72 upon which rests a stack of eight different cams which are generally designated by the numeral 73. These cams 73 are centrally apertured so as to be snugly fitted about the upper cylindrical portion 74 of the member 67 and of these cams the lower seven are adapted to be clamped to the sleeve member 67 by means of a shoulder screw 75 which is threaded within the upper portion of the member 68 and which bears against a retaining plate 76 for the purpose of locking the lower seven cams against the aforementioned sleeve shoulder 72 thereby to insure that all of these cams will rotate in synchronism with the sleeve 67.

In order to time the various cams properly, there is provided a timing pin 77 which is snugly received within an aligned aperture 78 formed within each of the various cams. This locking pin is maintained in a fixed vertical position due to the fact that it is provided with a slot 79 which is entered by a peripheral portion of the retaining member 76. The plate 76 is in turn secured to the sleeve 67 by three screws 80—80 each of which is threaded directly into the upper portion of the sleeve 67 in a manner as best disclosed in Fig. 9.

Resting upon the retaining plate 76 is the upper or eighth cam member, designated by the word "Special," which, like the remaining cam elements, is provided with an aperture 78 which receives the locking pin 77. This upper cam member is provided with a collar 81 which is integrally secured to the cam so that an operator may, after lifting the cover 58, remove this cam and replace it with other selected cams. Quite obviously, however, this upper cam with its handle member 81 will rotate in synchronism with the remaining cams which make up the cam group 73 for the reason that it is mated with the locking pin 77. The structure of this upper cam and its handle member 81 is disclosed and claimed in my copending U. S. continuation-in-part patent application Serial No. 636,023, filed January 24, 1957.

As may be best observed from Fig. 9, the lower portion of the sleeve 67 is provided with a large bore 82 within which is disposed a boss portion 83 of a combined needle bight and field selector member 84. The boss 83 is turnably mounted upon the vertical pin 68 and it rests upon a shoulder 85 of the sewing machine bracket-arm frame 8. The oppositely disposed end portions of the member 84 carry in a manner as is best disclosed in Figs. 2, 8, 9 and 10, a circular compound cam member which is generally designated by the numeral 86. As will later be described in further detail, the member 86 is provided with three stepped concentric cam faces A, B and C and projecting from a peripheral portion thereof is a needle bight and field selector arm 87 which is secured thereto by means of a screw 88. It is to be understood that the arm 87 provides an operator-influenced means whereby the entire member 84 with its cam portion 86 may be shifted back and forth about the pivot member 68.

As is best disclosed in Figs. 3, 7 and 9, the interior portion of the bracket-arm 8 is provided with a pair of stop arms 89—89, each of which is adjustably secured to the bracket-arm by means of a screw 90. From Fig. 7, it is to be understood that the arms 89—89 cooperate with the needle bight and field selector member 84 so as to limit the rotary movements thereof.

Referring particularly to Figs. 2, 8 and 10, the needle bight and field selector member 84 is provided at its peripheral portion with a radially disposed cylindrical guide aperture 91 which is adapted to receive for purposes hereinafter described a spherical guide head 92 which is carried by the link or pitman member 93. Still referring to Figs. 7, 8, 9 and 10, the upper portion of the three-part cam member 86 is formed with a recess 94 within which is disposed a lubricating wick 95, the opposite end portions of which depend downwardly into a pair of apertures 96 and 97. As may be best seen in Fig. 3, all of the cams 73 are provided with an aligned aperture 98 which is disposed over the wick 95 so as to permit the operator to oil the wick from an oil can in the usual fashion and thereafter the wick will function to lubricate various parts of the sewing machine including the aforesaid guide ball 92 of the pitman 93.

Cooperating with the stacked cams 73 are a pair of cam followers 99 and 100 of which the forward follower 99 is slidably and rotatably mounted

post 101, the lower portion 102 of which is mounted within an aperture 103 formed in the bracket-arm 8 and is locked in position by means of a set screw 104. The rear cam follower 100 is similarly rotatably and slidably mounted upon an upright post 105 whose lower end 106 is secured within an aperture 107 formed in the bracket-arm 8 by means of a set screw 108. The free end portions 109 and 110 of the cam followers 99 and 100 are adapted to engage the peripheral portions of the aforementioned cams 73 and 86, as well as the substantially vertically disposed front face 111 of a motion-integrating plate which is generally designated by the numeral 112. As is best disclosed in Fig. 8, the plate 112 is provided with a pair of vertically aligned apertures 113, 113 which are pivotally mounted upon pins 114 carried on the end of cylindrical members 115 and 116 which are respectively mounted in apertures 117 and 118 provided in the forked end portion 119 of the aforesaid pitman 93. From this, it is to be understood that the plate 112 is pivoted in the manner of a trunnion upon the pins 114, 114.

Opposite the forked end 119 of the pitman 93, the latter member is provided with a pair of apertures 120—120 through which pass cap screws 121—121 which function adjustably to lock that end of the pitman to a C-shaped block 122 in a manner such that the pitman 93 may be shifted lengthwise of itself and relative to the block 122 for adjustment purposes. Referring particularly to Figs. 2, 7 and 18, it is to be understood that the C-shaped block 122 has the free end portions of its limbs pivotally receiving a pin 123 whose intermediate portion is locked within a crank or needle-bar gate 124 by way of set screws 125—125. This gate 124 is apertured as at 126 so as to be pivotally mounted upon a depending cylindrical member 127 in a manner as will be hereinafter described in further detail. The gate member 124 is maintained in a proper upright position upon the member 127 by way of a collar 128 which is fastened to the member 127 by a set screw 129. From the above, it is to be understood that the gtae 124 affords a pivotal connection which will permit the left hand end of the pitman 93, as viewed in Fig. 7, to shift endwise of itself for the purpose of shifting the needle-bar 10 back and forth laterally of the direction of work feed in a manner as will be described hereinafter in further detail.

Referring particularly to Figs. 2, 7 and 18, the pitman 93 is adapted to be spring biased at all times in a right-hand direction as is viewed in Fig. 7 by way of a coil spring 130 which has its one end portion wrapped about a distal end portion of the pivot pin 123 while its other end portion is anchored to an arm 131 of a pivot member 132 which, as is illustrated in Fig. 14, is pivotally mounted upon the cylindrical portion 133 of a pin whose reduced lower end portion 134 is anchored in a boss 135 provided in the interior portion of the bracket-arm 8. The member 132 is provided with another arm portion 136 which, as illustrated in Fig. 7, is adapted to engage the rear face 137 of the motion-integrating plate 112 so as to bias the plate together with the pitman 93 in a right-hand direction toward the cam followers 99 and 100, thereby to force such followers into engagement with various selected cams of the cam group 73 or 86.

Each of the cam followers 99 and 100 is adapted to be shifted up and down along its associated post 101 or 105 so that it may be brought in engagement with a respective one of the cams for the purpose of imparting various patterns of movement to the pitman 93 and subsequently to the laterally shiftable needle 10. Referring particularly to Figs. 7 and 17, each of the cam followers 99 and 100 is provided with a slot 138 which is adapted to receive a knife-like element 139 secured by means of a screw 140 to a respective one of a pair of cam-selector arms 141 and 142 which are in turn mounted upon a cross-shaft designated by the numeral 143.

It is to be particularly observed that each of the substantially upright posts 101 and 105 upon which the cam followers are respectively mounted is provided with a plurality of slots 144—144, which are so arranged that whenever either one of the cam selector fingers 139—139 is engaged within one of such slots its respective cam follower 99 or 100 has its tracking element 109 or 110 properly engaging a respective one of the various cams 73 and 86. Furthermore, as hereinabove noted, the coil spring 130, by bearing against the arm 131, will urge the motion-integrating plate 112 against each of the tracking elements 109 and 110 so as to, in turn, force these elements into engagement with a selective pair of the cams. The movements of the cams in response to the rotation of the main shaft 13 will, of course, oscillate the cam followers 99 and 100 about their respective posts 101 and 105 in accordance with the peripheral configurations of the selected cams.

An operator-influenced mechanism has been provided with the present machine for shifting each of the cam followers 99 and 100 up and down along its associated posts 101 and 105, which mechanism includes a pair of cam-selector knobs 150 and 151 of which the knob 150 is made fast to the forward end portion of the cross shaft 143, while the rear end portion of the shaft 143 is slidably mounted within a cylindrical sleeve 152 which is supported within the rear wall portion of the bracket-arm 8. An intermediate portion of the shaft is slidingly supported within an upright bearing member 64 carried by the bracket-arm 8. Adjacent the rear portion of the shaft 143 is adjustably mounted by means of a screw 154 the cam selector 142 in a manner such that whenever the cam-selector knob 150 is shifted inwardly it will disengage the blade 139 of the cam-selector arm from a respective one of the post slots 144 so that the selector knob may be rotated and thereby either elevate or depress the cam follower 100 so that the cam follower may be made to engage a different cam. In this latter connection, it is to be understood that through a rearward movement the cam-selector arm 142 will engage an extended portion 156 of the cam follower 100 for the purpose of rotating the follower about the post 105 in a clockwise direction as viewed in Fig. 7 so as to withdraw the cam follower from engagement with the cams and against the biasing action of the spring 130 so that upon a downward shifting movement of the cam-selector arm 142, the tracking element 110 of the arm 100 will not be caught against the peripheral portion of any one of the cams. Whenever the cam follower 100 is placed in a new position, it is to be understood that a forward movement of the knob 150 will be effective to draw the cam-selector arm 142 forwardly and into engagement with a respective one of the slots 144 of the post 105.

The rearward cam-selector knob 151 is formed as an integral portion of a boss 156 which is slidingly and rotatably mounted upon the cross shaft 143 and which carries the cam-selector arm 141 through the medium of a plurality of screws 157, 157. The cam-selector arm 141 has an auxiliary arm member 158 which cooperates with a projecting arm portion 159 of the cam follower 140 so that whenever the cam-selector knob 151 is drawn toward the operator, the auxiliary arm 158 will engage the portion 159 of the cam follower for the purpose of turning the same in a counterclockwise direction as viewed in Fig. 7 for the purpose of withdrawing the tracking member 109 from engagement with the cams and against the action of the spring 130 in a manner as was hereinabove described in connection with the rearward cam follower 100. It will be understood that the rear cam-selector knob 151 functions in the same manner as the forward knob 150 in that the turning movement of the former will be effective to raise and lower the forward cam follower 99 in the same manner as is effected in connection with the rear cam follower 100.

Referring particularly to Fig. 14, the forward end portion of the cross shaft 143 is provided with a coil spring 160, the opposite ends of which are biased against the internal portions of the cam-selector knobs 150 and 151

so as to bias these two knobs in opposite directions. Referring particularly to Figs. 7 and 14, it will be appreciated that the forward movement of the shaft 143 and its knob 150 under the influence of the coil spring 160, will be arrested due to the fact that the rear cam-selector arm 142 will, through the medium of its blade 139, engage the rear upstanding post 105. The rearward movement of the knob 151 under the influence of the spring 160 will be arrested by means of a stop member 161 which is carried upon a post 162 threaded within the forward wall portion 163 of the bracket-arm 8.

Referring particularly to Figs. 1, 3, 7, 14 and 47, the rearward cam-selector knob 151 is provided with a pointer 165 which cooperates with an indicia plate 166 carried upon the forward face of the bracket-arm 8 by means of screws 167—167 to afford the operator a visual indication as to the position of the rear cam follower 100. Likewise, the forward cam-selector knob 150 carries an indicator 168 which passes a slot 169 formed in the rear knob 151 so as to cooperate with the indicia plate 166 to provide a visual indication as to the position of the cam follower 99. As is illustrated in Figs. 1 and 47, the arm 168 is adapted to point toward one of a plurality of indicia letters generally designated by the numeral 170, each of which letters corresponds to a respective one of the various above mentioned cams, while the arm 165 cooperates in a similar manner with indicia letters 171 which likewise represent various cams.

As hereinabove indicated, each of the rotary cams 73 is non-concentric in the sense that it is provided at its peripheral portion with definite projections and grooves so as to provide a particular pattern of lateral needle movement. Each of the three non-rotary cams carried by the member 86, however, is concentrically arranged about the post 68 and, thus, a shifting movement of these cams about the axis of the post 68 will not be effective to shift the cam followers 99 and 100 about their respective posts 101 and 105.

Referring particularly to Figs. 1, 2, 3, 9 and 10, the non-rotary cam member 86 is provided with the above noted handle 87 which projects through an aperture 172 provided in the front wall of the bracket-arm 8 so that the operator may grasp this handle and shift the same back and forth to effect a turning movement of the member 86 about the axis of the post member 68. As may be best observed in Fig. 47, the indicia plate 166 is apertured as at 173 to allow for this handle movement while an intermediate portion of the slot 173 is provided with a keeper slot 174 into which the handle 87 will be biased by means of a spring element 175 which connects the arm 87 to the member 86. From this, it will be appreciated that the keeper slot 174 functions normally to maintain the handle 87 in an intermediate position and that the operator may shift the handle from this position by biasing it downwardly and shifting it sidewise either in a left or right hand direction.

As hereinabove mentioned, even though the shifting movement of the handle 87 will not actuate the cam followers 99 and 100, it will shift the body portion 86 of the member about the axis of post 68 and, consequently, the groove 91 in which the pitman ball 92 is located will be shifted sidewise to effect a sidewise movement of the right-hand end portion of the pitman 93 to the end that the motion-integrating plate 112 will be shifted laterally relative to the cam followers 99 and 100. Thus, the actions of the cam followers 99 and 100 will be integrated in a different manner to the end that the pattern of lateral needle-bar motion will be varied as the handle 87 is successively shifted back and forth. In this connection, it is to be understood that as the cam followers 99 and 100 pivot back and forth about their respective posts 101 and 105 in conformance with the rotary motions of the stacked cams 73, the motion integrating plate 112 will absorb these cam-follower motions by pivoting about its trunnion pins 114—114 and by shifting back and forth with its pitman 93 in a path controlled by the groove 91 and the pitman gate 124. Thus, by this action the member 112 will integrate the cam-follower motions and transmit the same to the gate 124 which in turn will transmit the motions to the needle-bar 10 in a manner as will hereinafter be described in more detail. Quite obviously, the cam followers 99 and 100 may be placed in engagement with a single one of the various cams or in the alternative the operator may place the followers in contact with different cams thereby to effect various combinations of movements.

Although the present invention contemplates the usage of different combinations of cams, the form of the invention illustrated in the present drawings is so constructed that the rear cam follower 100 may be shifted into engagement with any one of the cams 73 and 86 which in Fig. 9 are labeled individually by the letters A to J inclusive, and by the word "Special." The forward cam follower 99, however, is adapted to engage only those cams which bear the letters C to J inclusive as well as the "Special" cam. In this connection, it is to be understood that the letters K to R inclusive as noted on the indicia plate 166 correspond respectively to the cams C to J inclusive, so that for example, when the pointers 165 and 168 are respectively set adjacent the letters K and C the cam followers 109 and 110 will each engage the same cam. These letters have been placed on the indicia plate to assist the operator in selecting various ornamental stitch patterns which, as is shown in Fig. 45, are illustrated on an instruction plate generally designed by the numeral 180, which plate may be secured to the inside portion of the machine cover-plate 58. From this instruction plate the operator by manipulating the cam-selector knobs 150 and 151 in accordance with the instructions of the plate 180 will be able to effect various patterns of ornamental stitching of the type shown on the instruction plate. Quite obviously, however, the patterns illustrated on this plate are merely a few of those which it is possible to produce with a machine of this type. The instruction plate 180 does not give any information as regards the use of the so-called "Special" cam and, as hereinabove pointed out, various special cams may be substituted to provide patterns in accordance with the requirements of various types of work.

This instruction plate 180 with its associated mechanism is disclosed and claimed in my copending U. S. continuation-in-part patent application Serial No. 591,718, filed June 15, 1956, now Patent No. 2,848,963.

From the above, it is to be appreciated that the manually controlled lever 87 which actuates the lower three cams A, B and C, as well as the guide groove 91 for the pitman ball 92, has two functions of which the first is to provide conveniently controllable means for determining a neutral position of non-vibration of the needle at the center or at either side of the field of lateral throw of the needle, whereby the needle may be caused to perform straight stitching along a center line through the field or along a line disposed entirely at either of the two sides of the field. Also by the use of this means as well as the various cams, the needle can be caused to vibrate laterally from zero to maximum either across a center line through the field or entirely from either of the two sides of the field.

Fig. 11, diagrammatically illustrates the number 3 (see Fig. 47) or central position of the arm 87 which with the A and K settings of the knobs 150 and 151 produces straight stitching along a line 43 running centrally through the field of lateral needle vibration.

Fig. 12 illustrates the number 5 or right-hand position of the arm 87 which with the A and K settings of the knobs 150 and 151 produces straight stitching along a line disposed at the right hand side of the field of needle vibration. In Fig. 12, although the top portion of the needle-bar 10 is shown at a distance T to the left of the center line 43, the bottom of the needle-bar along with the needle

50 is disposed at the right hand side of the line 43 in a manner as will hereinafter be described.

Fig. 13 illustrates the number 1 or left-hand position of the arm 87 which with the A and K settings of the knobs 150 and 151 produces straight stitching along a line disposed at the left-hand side of the field of needle vibration. In Fig. 13, although the top portion of the needle-bar 10 is shown at a distance T to the right of the center line 43, the bottom of the needle-bar along with the needle 50 is disposed at the left-hand side of the line 43 as will be hereinafter explained.

Furthermore, the manually shiftable lever 87 has a second function in that with certain settings of the cam followers 99 and 100 the shifting of the handle 87 will alter the amplitude or bight of the lateral needle vibration. In this latter connection, reference may be had to Figs. 48, 49 and 50 which diagrammatically illustrate the type of zigzag stitches it is possible to effect with the present mechanism. Referring specifically to Fig. 48, this work may be performed with the cam follower 100 disposed against the concentric cam A while the forward cam follower 99 is disposed against the cam D which corresponds to the indicia plate letter L. With the cam follower so located and the hand lever 87 positioned in its far right-hand location which is designated on the indicia plate 166 by the numeral 5, the needle will be caused to vibrate back and forth centrally across the maximum field of vibration laterally of the direction of work feed as is indicated by the upper portion of the Figure 48. However, as the handle 87 is progressively moved in a left-hand direction, the amplitude or bight of needle vibration will be decreased so that, for example, when the lever 87 gets to its mean position, designated by the numeral 3 on the indicia plate 166, only one-half of the available needle vibration will be performed, while with the hand lever 87 shifted to the extreme left-hand position as indicated by the numeral 1, straight line stitching will be performed entirely at the left-hand portion of the field of vibration.

Likewise, as illustrated in Fig. 49, when the rear follower 100 is placed in engagement with the cam B and the follower 99 is in engagement with the cam D corresponding to the indicia plate letter L, the needle will again vibrate through its full amplitude while the hand lever 87 is in its extreme right-hand position. But as the handle is moved toward the left, it will decrease the amplitude of needle vibration in a manner which is symmetrical about the center 43 of the field of vibration.

Fig. 50 illustrates the type of pattern which is obtained whenever the rear follower is placed in engagement with cam C and the front follower in engagement with cam D corresponding to the indicia plate letter L and the lever 87 is positioned to the extreme right, in which case the needle will vibrate through its greatest amplitude and as the hand lever 87 is shifted to the left the needle bight will be reduced from a left-hand direction so that ultimately the needle will perform straight line stitching at the extreme right-hand portion of the needle vibration field.

In the present mechanism, as may be best observed in Fig. 7, the longitudinal axes of the forward pitman pivot pin 123, the motion-integrating plate trunnion pins 114 and the cam-supporting post 68 are all aligned along a straight line designated by the numeral 181—181. With the longitudinal axes of these three points so arranged and with the cam followers 99 and 100 each disposed in engagement with the cam B, the motion-integrating plate 112 would be found to have its rear face 137 disposed at a right angle to the central line 181—181 and, thus, this would represent a null position of the entire mechanism. However, as pointed out hereinabove, the forward cam follower 99 in the present embodiment of the invention is not adapted to be shifted into engagement with the cam B for it is not found that this is necessary in order to perform the required stitch patterns.

From the above, it is to be understood that the cams 73 represent intelligence record-carrying means which include a plurality of cams each representing a different response-producing record, while the cam followers 99 and 100 each represents intelligence pick-up means for simultaneously sensing and responding to a plurality of records of the record-carrying means in reaction to the relative movements between these pick-up means 99 and 100 and the record-carrying means represented by the cams 73. Also, the shaft 13, together with its meshing gears 65 and 66, and the connections between the shaft 13 and the needle-bar 10 represent means for producing such relative movements in synchronism with the needle reciprocating movements. It also follows that the plate 112 represents means associated with the pick-up means 99 and 100 for integrating a plurality of record responses, while the pitman 93 with its associated mechanism represents a transmission mechanism for shifting the needle sidewise in conformance with the integrated record response. It will be understood by those skilled in the art that various changes in this mechanism could be made and that such changes would all come within the purview of applicant's broad invention.

Needle-bar mechanism

As hereinabove noted, the hollow head portion 9 of the present sewing machine is provided with an upright needle-bar 10 which is adapted to be reciprocated endwise of itself, as well as to be laterally shifted in a direction substantially at right angles to the direction of work feed. Referring particularly to Figs. 4, 5, 6, 18 and 19, the needle-bar 10 is normally disposed with its longitudinal axis forming an angle of about eleven degrees with the vertical so that the eye-pointed needle 50 will be presented toward the operator thereby to improve the visibility of the operator in the stitching area. More specifically, the lower portion of the needle-bar 10 is slidingly mounted within a bore 185 of a bearing element, the upper portion 186 of which is formed substantially in the shape of a ball or sphere while the lower portion 187 is formed as a right cylinder. In order to form a seat for the ball 186, the frame portion 188 of the head 9 is provided with a bore 189 in which is slidingly mounted two spherical socket seats 190 and 191 in which the spherical bearing 186 is mated in a manner as is best disclosed in Figs. 6 and 18. A firm seat is provided for the bearing 186 by urging the spherical seat portions 190 and 191 together by means of a sleeve 192 which is threaded within the bore 189 of the frame 188. Whenever the sleeve 192 is properly seated it may be locked in position by means of a set screw 193. It is to be particularly noted that the right cylindrical portion 187 of the needle-bar bearing does not engage the sleeve 192 and, thus, the bearing 186 may be rocked back and forth in the manner of a universal joint within the bearing seats 190 and 191. Also, the needle-bar 10 may be reciprocated vertically within the spherical bearing 186.

The upper portion of the needle-bar 10 is slidingly mounted within a second bearing which comprises an upper portion in the form of a ball or sphere 194 having a lower portion shaped as a right circular cylinder 195. The spherical bearing 194 is received within a bore 196 provided within the gate 124 which, as hereinabove mentioned, is pivotally mounted upon an upright cylindrical member 127. The spherical bearing 194 rests upon a spherical seat or socket 197 formed in the lower portion of the bore 196, and the bearing 194 is maintained against this seat by a sleeve member 198 having its lower internal portion formed with a spherical surface as at 199. The sleeve 198 is maintained in intimate contact with the bearing 194 by a threaded cap 200 which is seated within the gate 124 and against the sleeve 198. The threaded cap 200 is apertured as at 201 to permit the needle-bar 10 to shift laterally relative

to the gate 124 in the manner of a universal joint. As is best disclosed in Fig. 6, the sleeve 198 may be locked in position by means of a set screw 202.

Referring particularly to Figs. 2, 4, 5 and 6, the forward portion of the main shaft 13 is provided with a conventional crank mechanism for reciprocating the needle-bar 10 endwise of its length. More specifically, the end portion of the shaft 13 is provided with a crank 203 having projecting therefrom a crank pin 204 to the end portion of which is pivotally secured a link 205 of which the lower portion is provided with a bore 206 for slidably receiving therein a cylindrical pin 207 whose one end portion is provided with a pair of laterally spaced cheeks 208—208. As may be best seen from Fig. 18, the cheeks 208—208 are provided with a pair of aligned apertures 209—209 for receiving therein a sleeve 210 which is provided with a central bore 211 for receiving the needle-bar 10. The sleeve 210 is locked in place upon the needle-bar by means of a set screw 212 and from this it is manifest that the sleeve 210 is formed substantially as an integral part of the needle-bar 10 and can rotate within the cheek apertures 209—209.

Thus, rotation of the main shaft 13 will, through the medium of the rotary crank 203 and its associated mechanism, function to reciprocate the needle-bar 10 back and forth lengthwise of its longitudinal axis and within its upper and lower bearings 194 and 186.

As hereinabove described, the needle-bar 10 is adapted to be shifted laterally of the direction of work feed by means of a plurality of rotary cams and a pitman member 93, of which the latter is pivotally connected to the needle-bar supporting crank or gate 124 by means of a vertical pin 123. From this it is to be understood that the endwise movements of the pitman 93 will effect an oscillation of the needle-bar gate 124 to the end that the upper portion of the needle-bar will be swung through an arc whose center coincides with the axis of the pivot member 127 about which the gate 124 oscillates. This needle-bar action is diagrammatically illustrated in Fig. 19, wherein the axis of oscillation of the gate 124 is represented by the line 215. The dotted arc 216 represents the path of movement taken by the axis of the pin 123 while the arc 217 represents the path of movement traversed by the upper cylindrical bearing 194 of the needle-bar 10. By the same token, the pitman 93 is diagrammatically illustrated as are also the cam followers 99 and 100, the needle bight and field selector member 84 and its associated handle 87.

Still referring to Fig. 19, it is to be understood that with the upper spherical bearing 194 of the needle-bar 10 shifting about a path designated by the arc 217 and with the lower spherical bearing 186 being bodily fixed in the lower frame portion 188, the needle 50 will be swung substantially through a path corresponding to an arc 218 which is designed to correspond substantially with the arc of movement of a loop-seizing hook 219 carried by a rotary loop-taker 220 mounted upon a substantially upright shaft 221. This rotary loop-taker is illustrated in more detail in Fig. 5 and it is to be particularly observed that the needle 50 is arranged to descend inside of the circular path of movement of a loop-seizing hook 219 at a location rearwardly of the loop-taker body with reference to the direction of normal work feed which is from right to left as viewed in Fig. 5. From this, it is manifest that within certain optimum limitations the needle will properly cooperate with the loop-seizing hook 219 no matter whether the needle is given endwise reciprocations or a combination of reciprocating movements and lateral sidewise movements since the needle 50 in its lateral movements follows a path 218 which substantially coincides with the circular path of movement of the loop-seizing hook 219.

Referring particularly to Fig. 20, there is illustrated a top plan view of the rotary loop-taker 220, and cooperating with this rotary loop-taker is a needle 50 which is shown in three different positions such as its central or normal position 222, its extreme left-hand position 223, and its extreme right-hand position 224, and in each one of these positions it will properly cooperate with the loop-seizing hook beak 219 in the formation of stitches due to the fact that the needle 50 is shifted along the path as represented substantially by the arc 218.

Thus, the gate 124 has one end pivotally mounted about a fixed axis and its other end pivotally connected by a ball joint structure with the upper end of the needle-bar 10. Means are provided for oscillating the gate about its axis thereby to swing the upper end of the needle-bar through an arc of a circle, as represented in Fig. 19 by the number 217. Also means are provided in the form of a second ball joint structure slidably associated with an intermediate portion of the needle-bar and carried by the frame for constraining the lower end of the needle-bar to swing through an arc of a circle, as represented in Fig. 19 by the number 218, which is eccentric to the other circle when such circles are projected upon the work-supporting surface 1.

This needle-bar structure is described and claimed in my copending divisional U. S. patent application Serial No. 634,719, filed January 17, 1957.

Presser-bar mechanism

The presser-bar mechanism incorporated in the present machine is located within the hollow portion of the head 9 and is supported in a pair of substantially opposed upper and lower cylindrical bores 230 and 231 formed respectively in portions 232 and 188 of the bracket-arm frame 8 (see Fig. 18). Referring particularly to Figs. 5 and 18, there is positioned within the lower bore 231 a hollow plunger sleeve 233 secured within the bore by means of a set screw 234. Slidingly mounted within the bore 235 of the sleeve 233 is a presser-bar 11 having at its lower portion, as hereinabove noted, a conventional type of presser-foot 51, and being provided within its upper portion with a hollow bore 236 within which is disposed a coil spring 237. Slidingly received within the presser-bar bore 236 is a plunger 238 of which the lower end portion is adapted to engage the spring 237, while its upper portion is formed with a cup-shaped member 239 provided in its upper surface with an annular groove 240.

As may be particularly observed from Fig. 18, the upper bore 230 is laterally offset from the lower bore 231 and it is provided with a cylindrical member 127 which is secured within the bore 230 by means of a set screw 241, which together with a shoulder portion 242 maintains the cylindrical member 127 in a fixed position at all times relative to the machine frame.

As hereinabove noted, the depending cylindrical member 127 functions as a pivot support for the needle-bar gate 124 which is maintained in position upon the member 127 by means of the aforesaid collar 128 and its associated set screw 129.

The depending member 127 is provided in its lower portion with an internal cylindrical bore 243 in which is slidingly mounted a second plunger 244 whose lower rounded end portion 245 is adapted to be received within the groove 240 of the plunger cap 239. The upper portion of the bore 243 communicates directly with a threaded bore 246 which is adapted to receive the threaded end 247 of a manually adjustable screw 248 whose lower end is adapted to engage the second plunger 244 for the purpose of shifting the same lengthwise of its axis thereby to compress the spring 237 through the medium of the first plunger 238 to the end that the spring 237 will bias the presser-bar 11 with its associated presser-foot 51 downwardly toward the sewing machine work-support 1.

Referring particularly to Fig. 5, the longitudinal axes of the upper plunger 244 and the presser-bar 11 are

disposed in parallelism with each other and with the needle-bar 10 and that, as hereinabove noted, the longitudinal axis of the needle-bar 10 forms substantially an eleven degree angle with the vertical to the end that the presser-bar and needle-bar are inclined relative to the work-supporting surface 1 in a manner such that the operator is afforded an unobstructed view of the needle 90 and the presser-foot 91.

With the presser-bar 11 offset forwardly from its upper spring-biasing plunger 244 a construction is provided which permits the needle-bar 10 to have an optimum turning radius about the axis of the plunger 244 and at the same time permits the needle and presser-bars 10 and 11 to be properly spaced to the end that the presser-foot 91 and the needle 90 are disposed in a proper side-by-side relation. The cooperating upper and lower presser-bar plungers 244 and 236 permit this offset construction due to the fact that they are interconnected by means of a plunger cup 239.

Still referring to Fig. 5, the upper portion of the presser-bar 11 has clamped thereto by means of a screw 249 an abutment member 250 against which a presser-bar lifter cam 251 is adapted to be shifted by a manual movement for the purpose of lifting the presser-foot 91 off the work support 1 so as to facilitate the insertion and removal of a work-piece. The presser-bar lifting cam 251 is formed as an integral part of a presser-bar lifting lever 252 which is pivoted to the machine frame in a conventional manner by a screw 253 threaded directly within the frame.

This presser-bar structure is disclosed and claimed in my copending divisional U. S. patent application Serial No. 634,755, filed January 17, 1957.

Rotary loop-taker mechanism

As hereinabove noted, the present machine is provided beneath the work support 1 with a rotary shaft 18 which is driven from the upper rotary shaft 13 through the medium of an upright shaft 23 and its associated gears including the lower meshing gears 24 and 25. The rotary shaft 18 is mounted in bearings 19 and 20 and its left-hand portion as viewed in Fig. 21 is provided with a spiral bevel gear 255 which meshes with a similar gear 256 (see Figs. 5 and 28) and is secured by means of a set screw 257 to the lower end portion of a vertically disposed hook shaft 258. The vertical shaft 258 is rotatably journaled within a bearing bushing 259 which in turn is mounted by means of a set screw 260 within a cylindrical bore 261 provided in a rotary hook support 262 which forms a part of the machine frame. The upper portion of the bearing bushing 259 is provided with a shoulder 263 which is adapted to support an annular loop-taker ring 264 which is integrally formed with the hook shaft 258. More specifically, the lower portion of the annular loop-taker ring is provided with a seat 265 which engages the top portion 263 of the bushing 259.

The rotation of the shaft 18 will, through the medium of the gears 255 and 256, rotate the vertical loop-taker shaft 258 and the gears 21, 22, 24, 25, 255 and 256 are so designed that the lower shaft 18 will rotate at twice the speed of the upper shaft 13 thereby to provide the usual two rotations of the rotary loop-taker for the one complete reciprocatory cycle of the needle 90.

Thus, it is to be understood that the rotary loop-taker mechanism is located beneath the work-supporting plate or surface 1 and entirely within the enclosed sewing machine base formed by the depending walls 2—2, 3—3 and the lower removable cover plate 4.

Referring particularly to Figs. 1 and 27, the work-supporting surface 1 is provided above the rotary loop-taker with an opening generally designated by the numeral 266, which opening is defined by a recessed ledge 267 which supports the conventional type of slide-plate 268 which may be shifted back and forth so as to cover the loop-taker in a manner as is disclosed in Fig. 1 or to give access to the loop-taker in a manner as is disclosed in Fig. 27. The rear portion of the opening 266 beneath the presser-foot 91 is adapted to be covered by means of a throat-plate 92 which, as is shown in Fig. 29, is provided with a needle aperture 270 and apertures 271, 272 and 273 which receive a feed-dog 33.

As is best illustrated in Figs. 5 and 27, the feed-dog 33 is carried by a feed-bar 34 and extends over the loop-taker ring 264. From this, it is to be understood that the rotary loop-taker mechanism is disposed substantially in front of the feeding mechanism as well as in front of the reciprocatory needle 90 so that the operator may have access to the loop-taker mechanism.

Referring particularly to Figs. 33 to 38, inclusive, the present loop-taker comprises an annular loop-taker ring 264 provided with an interior circular wall 275 formed concentrically with the vertical axis of loop-taker rotation which, of course, coincides with the longitudinal axis of the loop-taker shaft 258. As is particularly illustrated in Fig. 35, the ring 264 is provided with a gap 276 in the form of a scarf-like narrow channel which cuts through the interior wall 275. The annular loop-taker ring 264 is also provided with an interior circular rib 277 disposed adjacent and extending inwardly from the interior wall 275 with the rib having a gap therein coinciding with the interior wall gap 276 to provide at one end and as a part of such rib a loop-seizing beak 219 which is disposed closer to the center of the ring than and in substantial overlapping relation with the other end portion 279 of the rib. From this, it is to be understood that the gap 276 forms a scarf-like narrow channel which cuts through the interior wall 275 and the rib 277 to form two bias-cut overlapping end portions of the ring and an internal loop-seizing beak 219 at one end of the rib 277.

Referring particularly to Fig. 35, the interior rib 277 extends about the interior portion of the ring 264 for substantially 360° and the end portion 279 of the rib 277 opposite to the loop-seizing beak 219 is, throughout an angle represented by the letter W and equivalent to substantially 30°, formed with its interior peripheral surface spaced a greater distance from the ring center than the remaining portion of the rib thereby to form needle-thread loop clearance. In other words, the radius of the internal rib 277 is substantially constant throughout its major portion and the radius is indicated by the letter X, while during the last 30° of the ring as represented by the angle W the radius becomes increasingly greater until the inner peripheral portion of the rib substantially vanishes at a location 279 adjacent the loop-seizing beak 219. Since, as is illustrated in Fig. 20, the eye-pointed needle 90 reciprocates within the confines of the loop-taker ring 264 so as to have its loop seized by the beak 219, the tail portion of the rib 277 is given clearance so that the needle may throw out its thread loop as the needle is withdrawn upwardly through the work in a conventional manner.

Still referring to Fig. 35, the rib 277 is provided on its upper surface with an indentation 280 which is located directly adjacent the needle as the latter descends within the confines of the loop-taker ring 264, and this indentation 280 functions to deflect the needle inwardly in the event that the needle would otherwise strike the peripheral portion of the rib 277. Actually this indentation is located substantially 146 degrees in a counter-clockwise direction from the hook beak 219, which angle in Fig. 35 is represented by the letter Y. From the above, it is to be understood that the rotary loop-taker comprises a substantially cup-shaped member having an annular ring 264 which is formed integrally with a vertically disposed shaft 258 and which is secured to such shaft by means of a bottom web designated by the numeral 281.

As is best illustrated in Figs. 35, 36 and 37, the gap or

scarf-like channel 276 extends downwardly through the ring 264 so that the loop-seizing beak 219 may properly grasp the needle-thread loop. In order to provide a proper throat in the lower portion of the channel 276 the ring 264 is provided with an aperture 282 which is formed by drilling through the ring from the outside so that the inner portion of the aperture 282 will communicate with the interior of the channel 276 in a manner as is best disclosed in Figs. 35 and 36. This aperture is so employed because of the difficulties in forming such a channel throat by conventional machining methods.

Cooperating with the rotary loop-taker is a thread-case generally designated by the numeral 283 which is provided in the usual manner with an aperture 284 for receiving therein a thread-carrying bobbin 285; the lower portion of which is maintained within the thread-case aperture 284 by means of an inwardly extending annular thread-case shoulder 286.

Adjacent the bobbin-receiving aperture 284 the thread-case is provided with an indentation 287 which permits the operator readily to remove the bobbin 285 with the fingers. The thread-case 283 is formed with a peripheral rib 288 formed as an arc of less than 180° about a radius substantially equal to that of the interior wall 275 of the ring 264. As best disclosed in Figs. 33 and 34, the thread-case 283 is disposed within the eccentrically of the ring 264 with its rib 288 being vertically supported upon the upper side of the ring rib 277 and in sliding peripheral engagement with the interior circular wall 275 of the ring. Still referring to Figs. 33 and 34, the thread-case has a second peripheral rib 289 vertically spaced below the first rib 288 and disposed in sliding engagement with the under side of the ring rib 277 thereby to assist in maintaining the thread-case in its proper relation within the ring 264.

The wall 290 of the thread-case above the peripheral rib 288 is formed with a downwardly inclined thread slit 291 terminating in an enlargement 292 (see Fig. 34), the slit 291 being covered by a conventional type of tension spring 293 secured to the wall 290 by a fastening screw 294 and an adjusting screw 295 in a conventional manner. The tail portion 296 of the tension spring projects into an aperture 297 formed in the wall 290. The thread-case is threaded by drawing the thread from the bobbin upon the top of the side wall of the case through the slit 291 and under the tension spring 293 from beneath which it issues through the notch 298 in the upper edge of the bobbin cavity wall.

Referring to Figs. 28 and 33, the present rotary loop-taker has cooperating with it an inverted U-shaped member 299 disposed in straddling relation with the loop-taker ring 264 with one limb of the member disposed outside of the ring and supported beneath the ring on a base portion 300 which projects into a bore 301 formed within the loop-taker support 262. A set screw 302 secures the base portion 300 within the bore 301. The other limb of the member 299 is disposed within the confines of the ring and adjacent the thread-case and provides a substantially horizontally disposed thread-supporting bar 303 from which projects upwardly an abutment member 304 which functions to engage a portion 305 of the thread-case thereby to prevent the thread-case from shifting in a clockwise direction as viewed in Fig. 33.

As is best illustrated in Figs 33, 34, 36 and 38, the loop-taking mechanism is provided with a second means for restraining the thread-case and this second means prevents the thread-case from turning in a counterclockwise direction in synchronism with the loop-taker as viewed in Fig. 33. This second thread-case restraining means comprises a platform member 306 which is bent downwardly as at 307 to provide an arm 308 which is slidably received within a channel 309 formed in the frame portion 310 of the sewing machine base. The platform member 306 is supported in a substantial horizontal position by means of a leaf spring whose upper limb 311 bears downwardly upon the member 308 of the platform, while an under limb 312 is secured by means of a screw 313 to the under portion of the frame 310. In order to prevent the spring member from shifting, its one end portion 314 is confined within an aperture 315 formed in the under side of the frame portion 310.

The platform member 306 is normally locked in the position as illustrated by solid lines in Fig. 34 by means of a vertically disposed pin 316 mounted within a bore 317 formed in the frame portion 310. The upper end portion 319 of the pin 316 is adapted to be received within a notch 319' formed within the platform arm 308 thereby to lock the arm and platform member in position.

As is best disclosed in Fig. 38, the vertical pin 316 is secured within the frame bore 317 by means of a set screw 318 and the upper portion 319 of the pin 316 is formed eccentrically of its body portion so that by turning the pin 316 within the bore 317 the arm 308 of the platform member 306 may be effectively adjusted back and forth from left to right as viewed in Fig. 33.

Mounted upon the platform member 306 by means of screws 320, 320 is an abutment member 321 which is formed with a substantially vertically disposed arm 322, the free end portion of which is adapted to engage the flange portion 323 of the thread-case thereby to prevent the latter from turning in synchronism with the rotary loop-taker ring as the same rotates in a counterclockwise direction as viewed in Fig. 33. As may be seen in Fig. 38, the arm 322 of the abutment member is formed at its front portion with a downwardly depending lobe 324 which partakes of the thread-handling functions in a manner as will hereinafter be described.

The abutment member 322 is provided with an upwardly inclined finger piece 325 which permits an operator to grasp the abutment member and lift the same along with the platform 306 so that the latter will clear the upstanding locking pin 319 to the end that the operator may then shift the entire assembly in a right-hand direction as viewed in Fig. 33, thereby to remove the abutment member from the vicinity of the thread-case so that the entire thread-case may be removed from the loop-taker ring 264. In Fig. 34, the dotted lines represent the position assumed by the abutment member 321 when it is in its so-called retracted position.

From the above, it is to be understood that the operator may readily pull back the slide-plate 268 to gain access to the entire upper portion of the loop-taking mechanism and with the slide-plate in this retracted position, as is illustrated in Fig. 27, the bobbin 285 may be readily removed and replaced with a fresh bobbin and, furthermore, the abutment member 321 may be shifted from its operable position to a retracted position thereby to permit the threadcase 283 to be readily removed from the hook ring. Naturally, the removal of the thread-case 283 is greatly facilitated due to the fact that the present loop-taking mechanism is located entirely at the front of the inclined needle 50 and, thus, there are no obstructions to hinder the removal of the thread-case or the inspection of the entire loop-taking mechanism.

This loop-taking mechanism is disclosed and claimed in my copending divisional U. S. patent application Serial No. 634,904, filed January 18, 1957.

Throat-plate

Referring to Figs. 29 to 32, inclusive, the throat-plate 52 is provided with a laterally elongated needle-receiving aperture 270 which is elongated so as to receive a laterally vibrating needle. Fig. 32 illustrates a similar throat-plate 326 provided with a circular aperture 327 which is adapted to receive a needle which is restrained from shifting laterally of the direction of work-feed so that straight stitching may be performed. In all other respects these two throat-plates 52 and 326 are similar.

Referring particularly to Figs. 30 and 32, the under surface 328 of the throat-plates 52 and 326 are milled

away as at 329 so as to provide a bobbin-thread-retaining means in the form of an abutment shoulder 330 for maintaining a work limb of the bobbin thread at the extreme left-hand side of the needle aperture as viewed in Fig. 29 to the end that a proper stitch formation will be effected. It is to be understood that the thread-retaining abutment shoulder 330 is formed upon the under surface of the throat-plate adjacent the needle aperture and it extends crosswise of the feed-dog receiving slots 271 and 273. The described location of the thread-retaining abutment shoulder functions to maintain the bobbin-thread at the left-hand side of the needle aperture thereby to insure that whenever two needles are simultaneously employed they will uniformly descend at the same side of the interlocking bobbin thread thereby to insure that no hitch stitches will be formed during the forward feeding of the work. Even when a single needle is employed the retaining shoulder 330 will tend to maintain the bobbin thread at the left-hand side of the needle aperture in a manner as is shown in Figs. 41 to 45 inclusive.

This throat-plate structure is disclosed and claimed in my copending divisional U. S. patent application Serial No. 627,878, filed December 12, 1956.

Stitch formation

Figs. 41 to 45, inclusive, illustrate the formation of zigzag lock-stitches on a machine of the present character when employing a single needle. Referring particularly to Fig. 41, there is disclosed a fragmentary portion of a throat-plate 52 which supports work-pieces 331 in which zigzag stitches 332 are being formed. The loop-taker ring 264 is adapted to rotate in a counterclockwise direction, and as viewed in Fig. 41, the hook beak 219 has just seized the loop of the needle thread 333 and has commenced to carry the thread in a counterclockwise direction so as to concatenate it with the limb of the bobbin-thread 334 which leads from the bobbin 285 to the work-piece 331.

Fig. 43 illustrates the loop-taking mechanism with the loop-seizing beak 219 advanced from the position shown in Fig. 41 to a location where the needle-thread loop 333 just begins to be drawn over the bobbin-thread limb 334. In this figure, it is to be particularly observed that that portion of the needle loop which lies beneath the thread-carrier 283 is maintained upon the upper surface 303 of the thread-supporting bar of the inverted U-shaped member 299 to the end that this limb of the thread will be prevented from dropping below the thread-carrier restraining member 304 and thus becoming fouled thereunder.

Referring now to Fig. 44, it is to be seen that the loop-seizing beak 219 has passed through 180° from its loop-seizing position and that the upper limb of the needle thread 333 extends from the loop-seizing beak 219 in a left-hand direction to be retained between the forward inclined wall 336 of the depending lobe 324 of the thread-case abutment member 322 (see Fig. 38) and the flange 323 of the thread-case for the purpose of controlling the needle-thread loop so that the latter will not loop over the thread-case 303. It is to be particularly understood that the lobe 324 and the thread-case flange 323 will maintain control over the needle thread 333 until the take-up arm 56 commences to draw up the needle thread as the needle is withdrawn from the work. As soon as the take-up arm 56 commences to raise in the usual fashion it will draw the needle thread 333 upwardly through the needle and as a consequence the thread will be drawn off the loop-seizing beak 219 and from between the lobe 324 and the thread-case flange 323 until it assumes the position as illustrated in Fig. 45 wherein the needle-thread loop is illustrated as being controlled by a finger 335 which is formed upon the thread-case.

In Fig. 45, it is to be particularly observed that the needle-thread loop 333 is fully concatenated about the bobbin thread 334 and at the same time it extends about the controlling finger 335 so that the loop will have little or no tendency to loop about with the possibility of becoming fouled.

From the above, it is to be appreciated that the inverted U-shaped member 299 has two functions of which the first is to prevent the thread case from turning in a clockwise direction as viewed in Fig. 45, while the second function is to control the under thread portion of the needle thread in a manner as is disclosed in Fig. 43 wherein the under limb of the thread 333 is supported upon the member 303. By the same token, it is to be understood that the thread-case restraining arm 322 has a double function, of which the first is to prevent the thread-case from revolving in a counterclockwise direction as viewed in Fig. 41, while its second function concerns its depending lobe 324 which has an inclined surface 336 which cooperates with the flange 323 of the thread-case in maintaining control over the needle thread prior to the time that the take-up arm 56 withdraws such thread from the vicinity of the hook.

Throat-plate lifting mechanism

Fig. 1 illustrates the normal position taken by a throat plate 52 which, as hereinabove described, is disposed within the bed opening 266 and upon the inwardly directed opening ledge 267. As illustrated in Fig. 29, the throat plate 52 is provided at either side thereof with a slight indentation 52'—52' each of which is adapted to be received within a slot 337 formed within a respective one of a pair of plungers 338 and 339 which normally function to maintain the throat plate 52 in its operative position as is best illustrated in Figs. 1 and 22.

Each of the plungers 338 and 339 is slidingly mounted in a respective one of a pair of cylindrical bores 340 and 341 formed within depending members 342 and 343 of the work-support 1. The lower portion of each of the plungers 338 and 339 is provided with a collar 344 against which one end of a coil spring 345 is adapted to be biased. The upper end of the spring 345 which surrounds the plunger 338 engages the upper shoulder 346 of a bore 347 while the upper end of the spring 345 surrounding the plunger 339 engages a shoulder 348 formed on the member 343. From this, it is to be understood that the springs 345, 345 function to bias the plungers 338, 339 downwardly thereby to maintain the throat plate 52 in its operative position.

The present invention contemplates the provision of means whereby the throat plate 52 may be elevated to a position above the work support 1 so as to render the feed-dog 33 ineffective due to the fact that the latter can no longer project above the surface of the throat-plate for the purpose of feeding the work. Such an elevated position of the throat-plate is particularly disclosed in Fig. 23. With the throat-plate 52 so raised above the feed-dog, the latter is rendered ineffective and thus the operator may perform various types of ornamental stitching, the execution of which requires that the work be hand fed beneath the needle and over the throat-plate. Furthermore, those skilled in the art will readily understand that most ornamental stitching of this latter type is accomplished with the use of darning hoops for stretching and maintaining the work in a taut position and that with the present throat-plate 52 raised above the normal level of the work support 1, the throat-plate will function to bias the work upwardly over the normal work-support plate level and thereby stretch the same relative to the darning hoops to the end the work will be prevented from flagging during the stitching operations.

Referring particularly to Figs. 22, 23 and 24, each of the plungers 338 and 339 is provided with a hollow bore 349 in which is slidingly mounted a plunger pin 350 which normally under the force of gravity rests upon the upper surface of a cam bar generally designated by the numeral 351. The upper surface 352 of the cam bar 351 is provided with a pair of laterally spaced raised cam surfaces generally designated by the numerals 353

and 354. Also, the under surface 355 of the cam bar is provided with a depending cam surface designated by the numeral 356. As may be observed from Figs. 21 and 22, the cam bar 351 at its left-hand portion rests upon the upper surface of a screw 410 which is threaded directly within the lower portion of the depending member 342 which is provided with a slot 357 for receiving and guiding the cam bar 351.

As may be observed from Fig. 21, an intermediate portion of the cam bar 351 is guided within a slot 358 formed within a depending frame portion 359. The extreme right-hand end portion of the cam bar 351 is bent in the shape of an upright U as at 360 and supported within the opposite limbs of the U is a shoulder screw 361, an intermediate portion of which pivotally supports a handle 362 whose lower end portion 363 is bent in the shape of an eye and surrounds the shoulder screw 361. Intermediate the length of the handle 362 is formed oppositely extending pintle members 362'—362' which are supported within the upturned end portions 364—364 of the forked end of a support arm 365 which is secured to the sewing machine bed 1 by means of a screw 366.

As may be best observed in Figs. 21 and 25, the upper portion of the handle 362 extends through the bed 1 by way of a bed aperture 367 so as to be accessible to the operator in a manner as is best disclosed in Fig. 1. From this, it will be appreciated that the member 365 acts as a pivotal support for the arm 362 to the end that the free end portion of the arm may be swung from left to right thereby to effect a left to a right reciprocatory motion of the cam bar 351.

With the handle member 362 at its extreme right-hand position as illustrated in Fig. 25, the cam bar 351 is disposed in the position as illustrated in Fig. 22 wherein the throat-plate 52 is adapted to be disposed in its lowest or normal position. However, when the handle member 362 is shifted to an intermediate position as illustrated by the dotted lines generally designated by the numeral 368, the cam bar is shifted to the right so that the lower cam surface 356 of the bar is in a position on top of the support screw 356 and the upper flat portion of the left-hand cam 353 engages the pin 350 so as to elevate the same and the right-hand inclined portion 369 of the cam 353 engages the under surface of the plunger shoulder 344 so as to elevate the entire plunger 338 thereby to maintain the throat-plate in a position as is illustrated in Fig. 23.

By the same token, the right-hand cam 354 is positioned relative to the right-hand plunger 339 so that the upper flat surface of the cam will bias the pin 350 upwardly and the right-hand inclined portion 370 of the cam 354 will bias the plunger 339 upwardly in the same manner as illustrated in Fig. 23 in connection with the plunger 338. The throat-plate is locked in this raised position by being clamped between the plungers 338, 339 and their associated plunger pins 350—350.

When it is desired to remove the throat-plate 52 from the sewing machine, the operator merely shifts the handle member 362 to the left-hand dotted line position generally designated by the numeral 371. When in this position, the cam bar 351 has its left-hand end portion located in a manner as is illustrated in Fig. 24. From this latter figure it is to be seen that the lower cam 356 is in engagement with the top portion of the screw in a manner such that the plunger 338 is raised to its highest position by the upper flat portion of the cam 353, while the plunger pin 350 is permitted to drop downwardly into a groove 372. With the pin 350 dropped to this position, as is illustrated in Fig. 24, the throat-plate 52 is released so that it may be removed from beneath the plunger 338. By the same token, the plunger 339 is also shifted to its highest position due to the fact that the lower portion 344 of the plunger is positioned upon the upper flattened surface of the right-hand cam 354, while the plunger pin 350 is permitted to drop down in engagement with the upper surface 352 of the cam bar thus releasing the right-hand end portion of the throat-plate to the end that the throat-plate may be slipped away from the plungers 338 and 339 and be completely released from the sewing machine bed. Thereafter different throat-plates may be substituted.

Referring particularly to Figs. 1, 25 and 26, there is provided an indicia plate 373 formed with an elongated slot 374, which plate is adapted to surround the throat-plate actuating-handle 362 and to be secured to the bed portion of the machine by screws 366 and 375. As is illustrated in Fig. 26, the indicia plate 373 may be appropriately marked with the words Unlock, Up and Down to designate the three corresponding positions of the throat-plate actuating mechanism.

This throat-plate lifting mechanism is disclosed and claimed in my copending divisional U. S. patent application Serial No. 627,189, filed December 10, 1956.

Needle clamp

As is shown in Figs. 51 to 56, inclusive, and Fig. 61, the needle bar 10, at its lower portion, is provided with means for removably carrying the eye-pointed needle 50 which cooperates with the rotary loop-taker in the formation of stitches. More specifically, the needle-bar comprises a right cylindrical member 10 whose lower end portion is formed with a needle-shank receiving slot generally designated by the numeral 380. As may be seen in Figs. 56 and 61, intersecting the slot 380 is a second slot 381, which breaks through one cylindrical wall portion of the needle-bar 10. The slots 380 and 381 form a needle-shank receiving seat which is formed in part at least with a pair of substantially intersecting angularly disposed flat walls 382 and 383. Surrounding the lower portion of the needle-bar 10 and the lower portions of the intersecting slots 380 and 381 is a cylindrical clamping band generally designated by the numeral 384, which band is provided with a vertical bore 385 in which is slidingly received the needle-bar 10. One portion of the clamping band 384 is formed as a projecting boss 386 provided with a threaded bore 387 in which is screwed a thumb screw 388 whose inner end portion is formed in the manner of a cone as at 389. From Fig. 55, it is to be particularly observed that the longitudinal axis of the screw 388 coincides with that of the boss 386 and is laterally offset from the longitudinal axis of the needle-bar 10.

The clamping band 384 is rigidly secured to the needle-bar 10 by means of a screw 390 which passes directly through a first aperture 391 in the band to be threaded in an aperture 392 in an opposite band wall. Also, the screw 390 passes through an aperture 393 formed directly in the needle-bar 10 so that the screw will lock the band and needle-bar together as an integral unit.

The present needle clamp is adapted to receive a sewing needle 50 of a conventional type having a shank portion formed as a slab-sided right circular cylinder with the slabbed side 394 being disposed substantially on an opposite side of the needle from the elongated groove 395 and at the same side as the short groove 396. This is a conventional type of sewing needle which must be accurately positioned relative to its associated loop-taker so as to insure the formation of proper stitches. In any sewing machine, it is essential that the point of the needle must always pass a certain fixed distance away from the loop-taker. In order to insure passage of the needle at this fixed distance from the loop-taker, the point of the sewing needle must always bear a certain fixed relation to the needle-bar. It is standard practice in the art for the shank of a sewing needle to be provided with a slabbed side 394 (see Fig. 62) which lies in a plane a fixed distance from the needle point. The same fixed distance is maintained regardless of the needle size. By placing the slabbed side 394 of the needle-shank against a flat surface 382 (see Figs. 55 and 59) on the needle-bar 10, the cor-

rect distance between the needle and the loop-taker beak 219 will always be correctly maintained.

Referring to Fig. 62, it should be noted that the cross-sectional height *h* of the needle-shank is the minimum diametral dimension of the shank while the width *d* is the maximum diametral dimension.

As is perhaps best illustrated in Figs. 55 and 56, the needle 50 is adapted to be positioned within a needle-shank receiving slot 380 at the juncture of the two angularly disposed walls 382 and 383 and with the slabbed side 394 of the shank disposed flat against the wall 382. With the needle in this position, the thumb screw 388 may be advanced into the shank-receiving slot so that the conical head 389 will engage a peripheral rounded wall of the needle thereby to force the same into the pocket formed by the angularly disposed walls 382 and 383. In this position, the longitudinal axis of the needle should correspond substantially with that of the needle-bar 10.

Referring to Fig. 56, it is to be particularly observed that the needle 50 is adapted to be inserted upwardly into the shank-receiving slot 380 until the needle engages the screw 390, which functions as an abutment stop for the needle to insure that the latter is set at the requisite height within the needle-bar 10.

Associated with the clamping band 384 is a needle-thread guide member generally designated by the numeral 397, which comprises an apertured head portion 398 which is secured directly against the clamping band by means of the screw 390 in a manner as is best illustrated in Fig. 56. With the member 398 positioned against the clamping band 384, it is to be observed that projecting from the head portion 398 is a needle-thread guide loop in the form of a U-shaped finger 399 and projecting from the lower portion of the member 398 is a substantially C-shaped member 400 which is adapted substantially to surround the lower portion of the needle-bar 10 in a manner as is best disclosed in Fig. 54. An intermediate portion of the loop 400 is provided with an indentation 401 into which the needle thread is adapted to be trained so that the latter may function as a needle-thread guide.

The present needle clamp is designed in a manner so that not only may it accommodate a single needle for the purpose of straightaway or zigzag stitching as the case may be, but the clamp is also designed to accommodate two needles which are often employed in the production of various types of decorative straightaway or zigzag stitching.

In order to accommodate two as opposed to a single needle, the thumb screw 388 may be backed away and thereafter two similar needles 50 and 402 may be inserted into the needle-shank receiving slot 380 in a manner such that the flattened or slabbed portions 394, 394 will be positioned against the slot wall 382 and thereafter the thumb screw 388 may be advanced toward the needles to the end that the conical end 389 will engage the needle 402 so as to bias both needles toward the juncture of the slot walls 382 and 383, thereby to lock the needles in position with the uppermost portions of the needle shanks positioned in engagement with the abutment or gauge screw 390.

From the above, it is to be appreciated that the present needle clamp will accommodate one or two needles without requiring any changes in the clamp structure or any adjustment thereof with the exception of the manoeuvering of the thumb screw 390.

Although the present needle clamp may be employed in conjunction with any standard type of sewing machine, it has been particularly designed for use with a sewing machine employing a circularly moving loop-taker having a loop-seizing hook mounted to move about an upright axis. More specifically, the present clamp has been designed to be used in connection with a loop-taker of the type in which the needles are adapted to descend within the confines of the loop-taker ring for the purpose of presenting their respective needle loops to a loop-seizing beak which travels in a path which completely circumscribes the several needles. In this connection, reference may be had to Figs. 58 and 59 of which the former illustrates a rotary loop-taker ring 264 having a loop-seizing beak 219 which is rotated about a pair of needles 50 and 402 which, when they ascend through the work, throw out a pair of needle loops which will be seized by the loop-seizing beak 219.

In order that the twin needles will be positioned in an optimum relation relative to the loop-seizing beak 219, the wall 382 of the needle-shank receiving slot 380 is formed as a plane which is disposed in a substantially tangential relation with the circular path traveled by the loop-taker beak 219, which path is illustrated by the dotted line 403 of Figure 59. It is to be particularly observed that the opposing slot walls 382 and 404 are each disposed at a slight angle to the line which is drawn at right angles to the direction of work feed, which line in Fig. 59 is indicated by the line 405—405. With the walls 382 and 404 so disposed it will be observed that the right-hand needle 402 will be located slightly behind the left-hand needle 50 relative to the direction of work feed, which distance between the two needles is represented by the letter Z in Figure 59. In actual practice, it has been found that this distance may be in the order of seven thousandths of an inch. As illustrated in Fig. 59, the arc 403, which substantially represents the path of loop-seizing beak movement, is drawn about the radius struck from the axis of the rotary loop-taker, and is represented in Fig. 59 by the letter R.

In connection with the above described needle-clamp, it is to be particularly understood that when two needles are to be employed in conjunction therewith the left-hand needle 50 is located in a position within the needle-bar 10 which is exactly the same position as is taken by the needle when it is singly employed. However, in the present machine the twin needles may be adjusted so that they will normally straddle the center work seam line. This adjustment is made by shifting the lower end of the needle-bar 10 to the left by way of the needle-bight control handle 87. Thereafter, the twin needles may be employed for producing straight or zigzag stitches in conjunction with the rotary loop-taker.

This needle-clamp is disclosed and claimed in my co-pending divisional U. S. patent application Serial No. 626,908, filed December 7, 1956.

Having thus described the nature of my invention, what I claim herein is:

1. An ornamental stitch sewing machine comprising, a needle mounted for endwise reciprocation and for sidewise movements transversely of the direction of reciprocation, a plurality of different rotary cams, means for rotating said cams in synchronism with the needle reciprocating movements, a pair of cam-tracking elements rockably mounted upon laterally spaced axes, means biasing the cam-tracking elements against the cams whereby the elements will track and respond to a plurality of cams, operator-influenced means for selecting different combinations of cams to be tracked by said cam-tracking elements, and transmission mechanism connecting the cam-tracking elements with the needle for shifting said needle sidewise in conformance with the combined cam responses of said cam-tracking elements.

2. An ornamental stitch sewing machine as claimed in claim 1 and wherein said transmission mechanism includes a member having one end thereof connected with said needle, an integrating plate pivotally mounted upon the other end of said member, and spring means biasing said plate against said cam-tracking elements so that the plate will be shifted by said cam-tracking elements.

3. An ornamental stitch sewing machine as claimed in claim 1 and wherein said operator-influenced means includes mechanism operable to shift said cam-tracking elements lengthwise of their axes thereby to select dif-

ferent combinations of cams to be tracked by said elements.

4. An ornamental stitch sewing machine comprising, a needle mounted for endwise reciprocation and for sidewise movements transversely of the direction of reciprocation, a plurality of different rotary cams, means rotating said cams in synchronism with the needle reciprocating movements, a pair of cam-tracking elements rockably mounted about fixed axes, means biasing the cam-tracking elements against the cams whereby the elements will track and respond to a plurality of cams, operator-influenced means for selecting different combinations of cams to be tracked by said cam-tracking elements, transmission mechanism shifting said needle sidewise in conformance with the combined cam responses of said cam-tracking elements, said transmission mechanism including a member having one end thereof connected with said needle, an integrating plate pivotally mounted upon the other end of said member, spring means biasing said plate against said cam-tracking elements so that the plate will be shifted by said elements, guide means confining the plate-carrying end of said member to substantially straight-line movements, operator-influenced means, means connecting the operator-influenced means with the guide means for shifting said guide means and said member relative to said cam-tracking elements thereby to vary the cam response upon said needle.

5. An ornamental stitch sewing machine as claimed in claim 4 and wherein said cam-tracking elements are rockably mounted about laterally spaced axes for independent rocking movements in response to the actions of the various cams.

6. An ornamental stitch sewing machine comprising, a needle mounted for endwise reciprocation and for sidewise movements transversely of the direction of reciprocation, a plurality of different rotary cams mounted upon a common axis, means rotating said cams in synchronism with the needle reciprocating movements, a pair of cam-tracking elements rockably mounted about and shiftably mounted lengthwise of a pair of laterally spaced axes for tracking and responding to said cams, operator-influenced means, means connecting the operator-influenced means with the cam-tracking elements for shifting said cam-tracking elements lengthwise of their axes thereby to select different cams to be tracked by said elements, transmission mechanism shifting said needle sidewise in conformance with the cam responses of said cam-tracking elements, said transmission mechanism including a member having one end thereof connected with said needle, an integrating plate pivotally mounted upon the other end of said member, spring means biasing said plate against said cam-tracking elements so as to receive movements therefrom, means confining the plate-carrying end of said member to substantially straight-line movements, and operator-influenced means for shifting said last mentioned means and said member relative to said cam-tracking elements thereby to vary the cam response upon said needle.

7. A control mechanism for an ornamental stitch sewing machine having a frame and members in said frame to be controlled by said mechanism, comprising, a plurality of differently shaped cams mounted for rotation about a common axis fixed by said frame, means rotating said cams about their common axis, a pair of cam-tracking arms each pivotally mounted upon a respective one of a pair of laterally spaced axes fixed by said frame in parallelism with the cam axis, spring means biasing said arms against selected cams whereby they will engage and respond to selected cam surfaces, means connecting said arms with the members to be controlled whereby said members may be actuated in response to the surfaces of selected cams, operator-influenced means, and means connecting the operator-influenced means with the arms for sequentially pivoting each arm about its axis in opposition to the spring means thereby to withdraw each arm from engagement with a selected cam and for shifting each arm lengthwise of its axis after it has been withdrawn from engagement with a selected cam whereby different cams may be selected for engagement by each arm.

8. A control mechanism for an ornamental stitch sewing machine having a frame and members in said frame to be controlled by said mechanism, comprising, a plurality of differently shaped cams mounted for rotation about a common axis fixed by said frame, means rotating said cams about their common axis, a pair of cam-tracking arms each pivotally mounted upon a respective one of a pair of laterally spaced axes fixed by said frame in parallelism with the cam axis, spring means biasing said arms against selected cams whereby they will engage and respond to the selected cam surfaces, means connecting said arms with the members to be controlled whereby said members may be actuated in response to the surfaces of selected cams, and operator-influenced means for sequentially pivoting each arm about its axis in opposition to the spring means thereby to withdraw each arm from engagement with a selected cam and for shifting each arm lengthwise of its axis after it has been withdrawn from engagement with a selected cam whereby different cams may be selected for engagement by each arm; said operator-influenced means including handle means mounted upon said frame for reciprocating movements along and for turning movements about a fixed axis, means operatively connecting said handle means with said arms for pivoting said arms about their axes in response to reciprocating movements of said handle means, and means operatively connecting said handle means with said arms for shifting said arms lengthwise of their axes in response to turning movements of said handle means.

9. A control mechanism for an ornamental stitch sewing machine having a frame and members in the frame to be controlled by the mechanism, comprising, a plurality of differently shaped cams each mounted for rotation about an axis fixed by the frame, means rotating each cam about its axis, a plurality of cam-tracking arms each pivotally mounted upon and about an axis fixed by the frame, spring means biasing the arms against selected cams whereby they will engage and respond to selected cam surfaces, means connecting the arms with members to be controlled whereby the members may be actuated in response to the surfaces of selected cams, operator-influenced means, and means connecting the operator-influenced means with the cam-tracking arms for shifting the cam-tracking arms relative to each other thereby to select different cams to be tracked by such arms.

10. An ornamental stitch sewing machine comprising a frame, a needle mounted on the frame for endwise reciprocation and for sidewise movements transversely of the direction of reciprocation, a rotary cam mounted upon and about an axis fixed by the frame, means rotating the cam in synchronism with the needle reciprocating movements, transmission mechanism carried by the frame and including a substantially flat plate, two plate-engaging elements, spring means biasing one face of the plate against the two elements, means connecting a first of the two elements to the cam whereby such element in response to the movements of the cam will fulcrum the plate about the second element, operator-influenced means, means connecting the operator-influenced means with the second of the two elements for adjusting the second of the two elements back and forth whereby the second element will fulcrum the plate about the first element, and means supporting the plate within the frame and connecting the plate with the needle whereby the swinging movements of the plate about the elements will shift the needle sidewise.

11. An ornamental stitch sewing machine as claimed in claim 10 and comprising second operator-influenced means, means connecting the second operator-influenced means with the plate for shifting the plate laterally

1323

of the two elements thereby to alter the amplitude of movement imparted to the needle by the cam.

12. An ornamental stitch sewing machine comprising a frame, a needle mounted on the frame for endwise reciprocation and for sidewise movements transversely of the direction of reciprocation, a rotary cam mounted about an axis fixed by the frame, means rotating the cam in synchronism with the needle reciprocating movements, transmission mechanism including a member having one end connected with the needle for shifting the latter sidewise, a substantially flat plate pivotally mounted upon the other end of the member, two plate-engaging elements, a spring biasing one face of the plate against the two elements, means connecting a first of the two elements to the cam whereby such element in response to the movements of the cam will fulcrum the plate about the second element, operator-influenced means, means connecting the operator-influenced means with the second element for adjusting the second element back and forth to various preselected positions whereby the second element as a result of such movement will fulcrum the plate about the first element, second operator-influenced means, and means connecting the second operator-influenced means with the plate for shifting the plate laterally of the two elements thereby to alter the amplitude of movement imparted to the needle by the cam.

13. An ornamental stitch sewing machine comprising a frame, a needle mounted on the frame for endwise reciprocation and for sidewise movements transversely of the direction of reciprocation, a rotary cam mounted about an axis fixed by the frame, means rotating the cam in synchronism with the needle reciprocating movements, transmission mechanism including a member having one end connected with the needle for shifting the needle sidewise, a substantially flat plate pivotally mounted upon the other end of the member about an axis disposed in parallelism with one face and midway between opposing sides of the member, two plate-engaging elements, a spring normally biasing one face of the plate against the two elements whereby the two elements normally engage the face of the plate at opposite sides of the plate pivot axis, means connecting a first of the two elements to the cam whereby such element in response to the movements of the cam will fulcrum the plate about the second element thereby normally to shift the needle sidewise, operator-influenced means, and means connecting the operator-influenced means with the plate for shifting the plate laterally of the two elements thereby to alter the amplitude of sidewise movements imparted to the needle by the cam.

14. An ornamental stitch sewing machine as claimed in claim 13 and comprising second operator-influenced means, means connecting the second operator-influenced means with the second element for adjusting the second element toward and away from the plate to various preselected positions whereby the second element as a result of such movement will fulcrum the plate about the first element.

15. An ornamental stitch sewing machine comprising a frame, a needle mounted in said frame for endwise reciprocation and for sidewise movements transversely of the direction of reciprocation, intelligence record-carrying means having a plurality of different response-producing records mounted on said frame, intelligence pick-up means mounted on said frame for sensing and responding to at least portions of different selected pluralities of records of said record-carrying means in reaction to relative movement between said pick-up means and said record-carrying means, means for producing such relative movement simultaneously with the needle reciprocating movements, means enabling at least portions of selected pluralities of records to be sensed by said pick-up means, operator-influenced means connected with said last mentioned means for selecting different pluralities of records to be sensed by said pick-up means, and transmission means operatively connecting said pick-up means with said needle for shifting said needle sidewise in response to the actuation of said pick-up means by the selected records.

16. An ornamental stitch sewing machine comprising a frame, a needle mounted on said frame for endwise reciprocation and for sidewise movements transversely of the direction of reciprocation, a plurality of different rotary cams mounted on said frame, means for rotating said cams simultaneously with the needle reciprocating movements, cam-tracking means mounted on said frame for tracking and responding to at least portions of different selected pluralities of cams in reaction to the rotation of said cams, means enabling at least portions of selected pluralities of cams to be tracked by said cam-tracking means, operator-influenced means connected with said last mentioned means for selecting different pluralities of cams to be tracked by said cam-tracking means, and transmission means operatively connecting said cam-tracking means with said needle for shifting said needle sidewise in response to the actuation of said cam-tracking means by the selected cams.

17. An ornamental stitch sewing machine comprising a frame, a needle mounted on said frame for endwise reciprocation and for sidewise movements transversely of the direction of reciprocation, a plurality of different rotary cams mounted on said frame, means for rotating said cams simultaneously with the needle reciprocating movements, a pair of cam-tracking elements mounted on said frame for tracking and responding to at least portions of different selected pluralities of cams in reaction to the rotation of said cams, means enabling at least portions of selected pluralities of cams to be tracked by said pair of cam-tracking elements, operator-influenced means connected with said last mentioned means for selecting different pluralities of cams to be tracked by said pair of cam-tracking elements, and transmission means operatively connecting said pair of cam-tracking elements with said needle for shifting said needle sidewise in response to the actuation of said pair of cam-tracking elements by the selected cams.

18. A control mechanism for an ornamental stitch sewing machine having a frame and members in the frame to be controlled by the mechanism, comprising a plurality of differently shaped cams each mounted for rotation about a common axis fixed by the frame, means rotating the cams about the common axis, a pair of cam-tracking elements each pivotally mounted independently of the other about and shiftable lengthwise of an axis fixed by the frame in parallelism with the cam axis, spring means biasing the elements against different selected cams whereby they will engage and respond to selected cam surfaces, means connecting the elements with the members to be controlled whereby the members may be actuated in response to the surfaces of selected cams, and operator-influenced means connected with the cam tracking elements for shifting the elements relative to each other and lengthwise of their axes thereby to select different cams to be tracked by such elements.

19. A control mechanism as claimed in claim 18 and wherein said pair of cam-tracking elements are pivotally mounted about laterally spaced axes for independent pivotal movements in response to the actions of the various cams.

20. An ornamental stitch sewing machine comprising a frame, a needle mounted on said frame for endwise reciprocation and for sidewise movements transversely of the direction of reciprocation, intelligence record-carrying means having a plurality of different response-producing records mounted on said frame, intelligence pick-up means mounted on said frame for sensing and responding to at least portions of different selected pluralities of records of said record-carrying means in reaction to relative movement between said pick-up means and said record-carrying means, means for producing such relative

movement simultaneously with the needle reciprocating movements, means enabling at least portions of selected pluralities of records to be sensed by said pick-up means, operator-influenced means connected with said last mentioned means for selecting different pluralities of records to be sensed by said pick-up means, transmission means operatively connecting said pick-up means with said needle for shifting said needle sidewise in response to the actuation of said pick-up means by the selected records, and operator-influenced means connected with said transmission means for varying its reaction to the said response thereby to alter the pattern of sidewise needle movements.

21. An ornamental stitch sewing machine comprising, a frame, a needle mounted on said frame for endwise reciprocation and for sidewise movements transversely of the direction of reciprocation, a series of more than two rotary cams mounted upon a common axis fixed by said frame, means for rotating said cams simultaneously with the needle reciprocating movements, cam-tracking means mounted on said frame for tracking and responding to at least portions of any two selected cams of said series in reaction to the rotation of said cams, means enabling at least portions of any two cams of said series to be tracked by said cam-tracking means, operator-influenced means connected with said last mentioned means for selecting different combinations of cams to be tracked by said cam-tracking means, and transmission means operatively connecting said cam-tracking means with said needle for shifting said needle sidewise in response to the actuation of said cam-tracking means by the selected cams.

22. An ornamental stitch sewing machine comprising, a frame, a needle mounted on said frame for endwise reciprocation and for sidewise movements transversely of the direction of reciprocation, a plurality of different rotary cams mounted upon a common axis fixed by said frame, means for rotating said cams simultaneously with the needle reciprocating movements, cam-tracking means mounted on said frame for tracking and responding to at least portions of different selected pluralities of cams in reaction to the rotation of said cams, means enabling said cam-tracking means to be shifted back and forth lengthwise of the common cam axis for selecting different pluralities of cams to be tracked, operator-influenced means connected with said last mentioned means for shifting the latter lengthwise of the common cam axis, and transmission means operatively connecting said cam-tracking means with said needle for shifting said needle sidewise in response to the actuation of said cam-tracking means by the selected cams.

23. An ornamental stitch sewing machine comprising, a hollow frame, a needle mounted in the frame for endwise reciprocation and for sidewise movements transversely of the direction of reciprocation, a pitman located within the frame and having a first end thereof connected with the needle for imparting sidewise movements thereto, a plurality of differently shaped cams mounted within the frame for rotation about a common axis fixed by the frame, means rotating the cams about their common axis in synchronism with the needle reciprocating movements, a cam-tracking arm pivotally mounted about an axis fixed by the frame in parallelism with the cam axis for engaging and responding to the surface of a selected cam, means connecting the arm with the second end of the pitman whereby the pitman may be actuated in response to the surface of a selected cam, such last mentioned means including a spring which biases the arm into engagement with a selected cam, and operator-influenced means for sequentially pivoting the arm about its axis against the action of the spring to withdraw the arm from engagement with a selected cam surface and for shifting the arm lengthwise of its axis after it has been withdrawn from engagement with a selected cam whereby different

cams may be selected for engagement by the arm, said operator-influenced means including a handle mounted upon the outside of the frame for reciprocating movements along and for turning movements about a fixed axis, means operatively connecting the handle with the arm for pivoting the arm about its axis in response to reciprocating movements of the handle, means operatively connecting the handle with the arm for shifting the arm lengthwise of its axis in response to turning movements of the handle, and operator-influenced means disposed between the second end of the pitman and the arm for varying the reactions of the pitman to a selected cam response thereby to alter the pattern of sidewise needle movements.

24. An ornamental stitch sewing machine comprising a frame, a needle mounted on said frame for endwise reciprocation and for sidewise movements transversely of the direction of reciprocation, a plurality of different rotary edge cams mounted adjacent each other on said frame about a fixed common axis with each of said cams having an undulated peripheral cam edge surface, means for rotating said cams simultaneously with the needle reciprocating movements, cam-tracking means mounted on said frame for tracking and responding to different selected cam surfaces in reaction to the rotation of said cams, means enabling selected cams to be tracked by said cam-tracking means, operator-influenced means connected with said last mentioned means for selecting different cams to be tracked by said cam-tracking means, transmission means operatively connecting said cam-tracking means with said needle for shifting said needle sidewise in response to the actuation of said cam-tracking means by the selected cam, and an additional edge cam mounted upon said frame adjacent the first mentioned cams and coaxially about said common cam axis with the peripheral cam edge surface of said additional cam being formed concentrically about such common axis, said operator-influenced means being capable of effecting an engagement between said additional cam and said cam-tracking means thereby to immobilize said cam-tracking means in a predetermined position.

25. An ornamental stitch sewing machine comprising a frame, a needle mounted on said frame for endwise reciprocation, and for sidewise movements transversely of the direction of reciprocation, a plurality of rotary edge cams mounted adjacent each other on said frame about a fixed common axis with each of said cams having an undulated peripheral cam edge surface, means for rotating said cams simultaneously with the needle reciprocating movements, cam-tracking means mounted on said frame for tracking and responding to at least portions of different selected pluralities of cams in reaction to the rotation of said cams, means enabling at least portions of selected combinations of cams to be tracked by said cam-tracking means, operator-influenced means connected with said last mentioned means for selecting different pluralities of cams to be tracked by said cam-tracking means, transmission means operatively connecting said cam-tracking means with said needle for shifting said needle sidewise in response to the actuation of said cam-tracking means by the selected cams, and at least one additional edge cam mounted upon said frame adjacent the first mentioned cams and coaxially about said common cam axis with the peripheral cam edge surface of said additional cam being formed concentrically about such common axis, said operator-influenced means being capable of effecting an engagement between said additional cam and said cam-tracking means.

26. An ornamental stitch sewing machine comprising a frame, a needle mounted on said frame for endwise reciprocation and for sidewise movements transversely of the direction of reciprocation, a plurality of rotary edge cams mounted adjacent each other on said frame about a fixed common axis with each of said cams having an

undulated peripheral cam edge surface, means for rotating said cams simultaneously with the needle reciprocating movements, cam-tracking means mounted on said frame for tracking and responding to at least portions of different selected pluralities of cams in reaction to the rotation of said cams, means enabling at least portions of selected combinations of cams to be tracked by said cam-tracking means, operator-influenced means connected with said last mentioned means for selecting different pluralities of cams to be tracked by said cam-tracking means, transmission means operatively connecting said cam-tracking means with said needle for shifting said needle sidewise in response to the actuation of said cam-tracking means by the selected cams, and a plurality of additional edge cams mounted upon said frame adjacent the first mentioned cams and coaxially about said common cam axis with the peripheral cam edge surfaces of said additional cams being formed concentrically about such common axis but with each peripheral cam edge surface having a different radius with respect to the common cam axis, said operator-influenced means being capable of effecting an engagement between any one of said additional cams and said cam-tracking means.

27. A control mechanism for an ornamental stitch sewing machine having a frame and members in the frame to be controlled by the mechanism, comprising a plurality of differently shaped rotary edge cams mounted adjacent each other about a fixed common axis with each of said cams having an undulated peripheral cam edge surface, means rotating the cams about the common axis, a pair of cam-tracking elements each pivotally mounted independently of the other about and shiftable lengthwise of an axis fixed by the frame in parallelism with the cam axis, spring means biasing the elements against different selected cams whereby they will engage and respond to selected cam surfaces, means connecting the elements with the members to be controlled whereby the members may be actuated in response to the surfaces of selected cams, operator-influenced means connected with the cam-tracking elements for shifting the elements relative to each other and lengthwise of their axes thereby to select different cams to be tracked by such elements, and at least one additional edge cam mounted upon said frame adjacent the first mentioned cams and coaxially about said common cam axis with the peripheral cam edge surface of said additional cam being formed concentrically about such common axis, said operator-influenced means being capable of effecting an engagement between at least one of said cam-tracking elements and said additional cam thereby to immobilize such cam-tracking element in a predetermined position.

References Cited in the file of this patent

UNITED STATES PATENTS

1,033,721	Miller	July 23, 1912
1,105,354	Laula	July 28, 1914
1,149,049	Hemleb	Aug. 3, 1915
1,159,523	Miller	Nov. 9, 1915
1,306,752	De Voe	June 17, 1919
1,350,931	Moffatt et al.	Aug. 24, 1920
1,896,047	Grieb	Jan. 31, 1933
2,005,070	Bitzer	June 18, 1935
2,138,760	Fleckenstein	Nov. 29, 1938
2,211,286	Mueller	Aug. 13, 1940
2,310,176	Hale	Feb. 2, 1943
2,336,368	Parry	Dec. 7, 1943
2,344,414	Ritter	Mar. 14, 1944
2,344,632	Parry	Mar. 21, 1944
2,377,777	Hale	June 5, 1945
2,435,358	Kessler	Feb. 3, 1948
2,590,907	Van Tuyle et al.	Apr. 1, 1952
2,657,658	Johnson	Nov. 3, 1953
2,662,495	Parry	Dec. 15, 1953
2,681,629	Parry	June 22, 1954
2,682,845	Casse-Robert et al.	July 6, 1954
2,693,778	Harris	Nov, 9, 1954
2,698,589	Johnson	Jan. 4, 1955

FOREIGN PATENTS

19,184	Great Britain	of 1908
300,900	Switzerland	Nov. 1, 1954
784,689	France	May 6, 1935

UNITED STATES PATENT OFFICE

CERTIFICATE OF CORRECTION

Patent No. 2,862,468 December 2, 1958

Ralph E. Johnson

It is hereby certified that error appears in the printed specification of the above numbered patent requiring correction and that the said Letters Patent should read as corrected below.

Column 10, line 30, for "designed" read -- designated --; column 17, line 26, for "the", first occurrence, read -- and --.

Signed and sealed this 14th day of April 1959.

(SEAL)
Attest:

KARL H. AXLINE
Attesting Officer

ROBERT C. WATSON
Commissioner of Patents

[fols. 4591-4644] IN UNITED STATES DISTRICT COURT

GOVERNMENT'S EXHIBIT 184

U. S. Patent Office, December 14, 1954, Division 24

November 29, 1954.

Ornamental Stitch Sewing Machine

. . . . . .

[fol. 4645] Having thus described the nature of my invention, what I claim herein is:

1. An ornamental stitch sewing machine comprising, a needle mounted for endwise reciprocating and for sidewise movements transversely of the direction of reciprocation, intelligence record-carrying means having a plurality of different response-producing records, intelligence pick-up means for sensing and responding to selected combinations of a records of said record-carrying means in reaction to relative movements between said pick-up means and said record-carrying means, means for producing such relative movements in synchronism with the needle reciprocating movements, and transmission mechanism for shifting said needle sidewise in conformance with the combined record response.

. . . . . .

[fol. 4646] 8. An ornamental stitch sewing machine comprising, a needle mounted for endwise reciprocation and for sidewise movements transversely of the direction of reciprocation, rotary cam means having a plurality of different response-producing records, cam-tracking means for tracking and responding to a selected combination of cam records of said cam means in reaction to rotary movements of said cam means, means for rotating said cam means in synchronism with the needle reciprocating movements, and [fols. 4647-4687] transmission mechanism for shifting said needle sidewise in conformance with the record responses of said cam-tracking means.

. . . . . .

[fol. 4688] DEPARTMENT OF COMMERCE

United States Patent Office

Washington

Mailed January 30, 1956, Patent Division.

Joel G. Stanford
c/o The Singer Mfg. Co.
Elizabeth F, New Jersey

Applicant: Ralph E. Johnson
Ser. No: 471,766
Filed: November 29, 1954
For: Ornamental Stitch Sewing Machines

Please find below a communication from the Examiner in charge of this application.

Robert C. Watson, Commissioner of Patents.

Responsive to amendment filed Nov. 28, 1955.

Additional references applied:

Magowan (Br.)	19,184	of	1908	112/158

(2 shts. dwg. 4 pp. spec.)

Haas (Swiss)	300,900	Nov. 1,	1954	112/158

(1 sht. dwg. 5 pp. spec.)

This application now contains claims 1-74 inclusive.

The following claim, found allowable, is suggested for the purpose of interference. Applicant should make same by March 5, 1956 under the provisions of Rule 203. In making this ~~claim applicant is required~~ to overcome the filing date (Rule 131) of the Harris patent, of record, which shows the construction set forth in the claim; failure to do so will be considered a disclaimer of the subject matter involved:

> A sewing machine comprising a frame, a needle pivotally carried by said frame and mounted for endwise reciprocation and for lateral swinging movements, a rotary shaft mounted in said frame for reciprocating

said needle, means for rotating said shaft, a series of rotary cams carried by said frame and mounted about a common axis, means connected with said shaft for rotating said cams about said common axis, a cam follower mounted in said frame having a single cam-engaging head for engaging and responding to the surfaces of a cam of said series, means enabling a selected cam to be engaged by said cam-engaging head, said series of cams and said single cam-engaging head being relatively shiftable lengthwise of the common cam axis thereby to effect a complete traverse of said series of rotary cams, means normally urging said cam-engaging head into engagement with said selected cam surface, means engageable with said cam follower for [fols. 4689-4711] withdrawing said cam-engaging head from said selected cam surface, and a pitman having one end connected with said needle at a point spaced from the pivot and its other end operatively connected with said cam follower thereby to impart lateral swinging movement to said needle in response to the surface of said selected cam.

Claims 1-12 inclusive are rejected as lacking invention over Harris, of record or Magowan in view of Haas, the latter two cited above. To utilize a double acting cam follower as suggested by the followers 28 and 29, Figure 1 of Haas in lieu of the single cam followers utilized by Harris or Magowan would not involve invention but mere mechanical skill.

Claims 13-74 inclusive stand withdrawn from further consideration by the examiner, Rule 142(b), as being for a nonelected invention. Election was made without traverse in paper No. 5.

Thomas J. Hickey, Examiner.

JFranklin/md

[fol. 4712] U. S. DEPARTMENT OF COMMERCE

United States Patent Office
Washington

Mailed September 12, 1957, Patent Division 24

Joel G. Stanford
% The Singer Mfg. Co.
Elizabeth F, N. J.

Paper No. 10

Applicant: Ralph E. Johnson
Ser. No.: 471,766
Filed: November 29, 1954
For: Ornamental Stitch
Sewing Machines

Please find below a communication from the Examiner in charge of this application.

Robert C. Watson, Commissioner of Patents.

Responsive to amendments filed July 9, 1956 and July 1, 1957.

. . . . . .

Claims 1-5, 8-11 and 86-88 are each rejected as failing to patentably define from the suggested claim in paper [fols. 4713-4714] number 6. The suggested claim sets forth a sewing machine, a frame, needle, a series of rotary cams, a cam follower, said series of cams and said follower being relatively shiftable lengthwise of the common cam axis, etc., and applicant has failed to patentably distinguish therefrom.

. . . . . .

[fols. 4715-4751] The above cited references have been placed of record in this case at the request of the applicant.

Claims 1-12 inclusive and 75-97 inclusive stand rejected.

Thomas J. Hickey, Examiner.

GAMysLiwiec/pvp

[fols. 4752-4985] U. S. DEPARTMENT OF COMMERCE

Patent Office

Washington

Notice of Allowance

Mailed September 26, 1958

The application for patent identified below has been examined and found allowable for issuance of Letters Patent.

Filing Date: 11/29/54
Serial No: 471766
No. Claims Allowed: 27
Examiner: T. J. Hickey
Applicant: Johnson, Ralph E., Montainside, N. J.
Assignee: Singer Manufacturing Company, The

Title of Invention: Ornamental stitch sewing machines

With the allowance of the application the final fee becomes due. This fee is thirty dollars ($30) plus one dollar ($1) for each claim allowed in excess of twenty (20) and must be paid within 6 months from the date of this notice. Failure to remit the final fee will result in the patent being withheld from issue.

As a convenience in remitting this fee, use of the enclosed Form POL-85a is suggested. The final fee will not be received from anyone other than the applicant, his assignee or attorney, or a party in interest as shown by the records of the Patent Office.

If it is desired to have the patent issued to an assignee or assignees, an assignment, together with the fee for recording the same, must be filed in this Office on or before the date of payment of the final fee.

The patent will be issued and forwarded within approximately two months after receipt of the final fee.

By direction of the Commission.

Joel G. Stanford & M. J. Breen, The Singer Mfg. Co., Elizabeth F. N. J.

[fol. 2582] IN UNITED STATES DISTRICT COURT

GOVERNMENT'S EXHIBIT 188 (S-22)

Exhibit S-22
(Under Par. 115)

Machine-Carried Multiple Cam Zigzag Sewing Machines Exported to the United States From Europe Which Infringed Any of the Patents Listed Below

		Gegauf #1 Pat. No. 2,832,302	Harris Reissue (RE 24370)	Johnson Pat. No. 2,862,468
A. Non-Licensees	Model Names			
1. Husqvarna	Automatic Class 21A	X	X	
	Automatic Class 51	X	X	
2. Phoenix	Automatic Model 283	X	X	
B. Licensees				
1. Gegauf	Bernina Record	X		
	Bernina Favorit	X		
2. Gritzner-Kayser	Sears, Roebuck Lady Kenmore	X		
3. Vigorelli	Robot	X		X

[fol. 2583] IN UNITED STATES DISTRICT COURT

GOVERNMENT'S EXHIBIT 189 (S-23)

Exhibit S-23
(Under Par. 116)

Machine-Carried Multiple Cam Zigzag Sewing Machines Exported to the United States in 1957, 1958 or 1959 From Europe and Japan Which Infringed the Second Gegauf Patent or the Perla Patent

		Gegauf #2 Pat. No. 2,877,726	Perla Pat. No. 2,810,360
	European		
	Model Names		
Gritzner-Kayser	White Automatic Model 666[1]	X	
	Model 360	X	
Pfaff	Model 260	X	
Turissa	Novomatic	X	
	Japanese		
Sanwa	SZ-211	X	
	SZP-28	X	
Fukoku	ZA-2CA Vogue Stitch Model 88		X

[1] No imports after 1958.

[fol. 2584]

IN UNITED STATES

GOVERNMENT'S EXH

U

	1952	1953	1954	1955	1956	1957	1958	1959	1960	Total Units Sold
Straight Stitch Machines	517,000	490,141	544,431	518,165	464,988	381,365	355,384	363,473	312,220	3,947,443
Class 206 (8(a))	2,720	20,072	24,573	579	838	305	366	0	0	49,453
Class 306 (8(b))	0	0	15,712	68,687	48,014	19,308	9,927	13,308	10,399	185,355
Class 403 (8(b))	0	0	0	0	0	0	0	50,269	88,553	138,822
Class 319 (8(c))	0	0	0	0	56,965	31,838	4,199	1,023	0	94,025
Class 401 (8(c))	0	0	0	0	0	74,503	147,446	155,422	155,832	533,203
Miscellaneous	40	7	24	31	38	98	202	800	3,069	4,309
Total	519,760	510,220	584,740	587,462	570,843	507,417	517,524	584,295	570,349	4,952,610

IN UNITED STATES DISTRICT COURT

GOVERNMENT'S EXHIBIT 190 (S-24)

Exhibit S-24

United States Sales of Household Machines by Style and Year 1952 through 1960

1956	1957	1958	1959	1960	Total Units Sold	1956 Average Unit Retail Price	1956 Approximate Total Sales Value	1957 Average Unit Retail Price	1957 Approximate Total Sales Value	1958 Average Unit Retail Price	1958 Approximate Total Sales Value	1959 Average Unit Retail Price	1959 Approximate Total Sales Value	1960 Average Unit Retail Price	1960 Approximate Total Sales Value
464,988	381,365	355,384	363,473	312,226	3,947,443	$ 0	$58,406,419.	$ 0	$50,402,830.	$ 0	$48,418,018.	$ 0	$ 42,845,195.	$ 0	$ 35,339,379.
838	305	366	0	0	49,453	162.50	136,175.	162.50	49,562.	162.50	59,475.	0	0	0	0
						162.50		162.50							
48,014	19,308	9,927	13,808	10,399	185,355	250.00	10,191,637.	240.00	3,261,550.	240.00	2,382,480.	190.00	2,528,520.	160.00	1,663,840.
0	0	0	50,269	88,553	138,822	0	0	0	0	0	0	240.00	12,064,560.	240.00	21,252,720.
								290.00							
56,965	31,838	4,199	1,023	0	94,025	290.00	16,519,850.	280.00	8,763,570.	260.00	1,091,740.	260.00	265,980.	0	0.
0	74,503	147,446	155,422	155,832	533,203	0	0	300.00	22,350,900.	300.00	44,233,800.	300.00	46,626,600.	300.00	46,749,600.
38	98	202	800	3,069	4,309	—	—	—	—	—	—	—	—	—	306,900.
570,843	507,417	517,524	584,295	570,349	4,952,610		$85,254,081.		$84,828,412.		$96,205,713.		$104,410,855.		$105,312,439.

[fol. 2585]

IN UNITED STATES DISTRICT COURT

GOVERNMENT'S EXHIBIT 191 (S-25)

Exhibit S-25
(under Par. 130)

Japanese Zigzag Sewing Machines Imported Into United States

	1957		1958		1959	
Multiple Cam		30,142 (13.0)		44,994 (13.3)		57,732 (9.0)
Infringing Gegauf Pat. No. 2,832,302	30,142 (100%)		41,219 (91.6%)		39,344 (68.1%)	
Non-infringing Gegauf Pat. No. 2,832,302			3,775 (8.4%)		18,388 (31.9%)	
Replaceable Cam		85,368 (36.7)		91,396 (27.0)		206,539 (32.3)
Manual		117,121 (50.3)		202,041 (59.7)		375,111 (58.7)
Total		232,631 (100%)		338,431 (100%)		639,382 (100%)

[fol. 2586] IN UNITED STATES DISTRICT COURT

GOVERNMENT'S EXHIBIT 192 (S-26)

Exhibit S-26
(Under Par. 130)

Number of Multiple Cam Japanese Zigzag Sewing Machines Imported Into United States Which Come Within Gegauf Patent No. 2,832,302, Set Forth by Manufacturer and Trade Name

Manufacturer	Manufacturer's Model No.	American Trade Name	1957	1958	1959
Banshu	BWZ-50	New Home Model 8033		1,000	1,000
Koyo Seiko		New Home Model 8033A			1,500
	SAZ-803	Free-Westinghouse 803A			7,500
Nippon	HZ3-B1	Selectomatic 90	9,040	4,750	7,300
	HZ3-B3	Superselectomatic 100	4,200	5,178	5,400
	HZ3-B4	Wizard 150		6,945	12,413
	HZ3-B5	Sovereign 170			2,001
	FZ2-B1	Pacesetter 200	1,202	396	
	HZ3-B6	Coronado 250			30
Sankyo Seiki	FAZ-567	Sewmor 770 (Old Design)	550	3,000	
	SAZ-456	Belair 990 (Old Design)	3,200	3,600	
Sanshin	AZ-5	Two Selector Handle Model	8,300	2,650	
	AZ-10	Single Dial	3,650	12,700	900
	AZ-201	Design-O-Matic		1,000	1,300
		Total	30,442	41,219	39,344

[fol. 2587] IN UNITED STATES DISTRICT COURT

GOVERNMENT'S EXHIBIT 193 (S-27)

Exhibit S-27
(under Par. 130)

Number of Multiple Cam Japanese Zigzag Sewing Machines Imported into United States which Do Not Come Within Gegauf Patent No. 2,832,302, set forth by Manufacturer and Trade Name.

Manufacturer	Manufacturer's Model No.	American Trade Name	1957	1958	1959
Feather	F-120	Universal TViewer Model			3,103
Fukoku	ZA-2CA	Vogue Stitch 88		249	800
Kyokuto	KEZ-100	Modern 116 and Vogue Stitch Model D			2,850
	KEZ-201	Alden's Cam 3-In-1			
Sankyo Seiki	(FAZ-567-2 (FAZ-30-2 (SAZ-456-2	Sewmor 770 (New Design)		600	6,400
	(SAZ-20-2	Sewmor 990 (New Design)		925	2,550
	FAZ-740	Viscount 740		2,001	2,000
Sanwa	SZ-211				510
	SZP-28				175
		Total		3,775	18,388

[fol. 2588] IN UNITED STATES DISTRICT COURT

GOVERNMENT'S EXHIBIT 194 (S-28)

Exhibit S-28
(under Par. 131)

European Zigzag Machine Carried Multiple Cam and Replaceable Cam Sewing Machines Imported Into United States

	1957		1958		1959	
Machine-Carried Multiple Cam		19,051		21,083		40,773
Coming within Gegauf Pat. No. 2,832,302 and imported by licensees	2,072		4,055		23,075	
Coming within Gegauf Pat. No. 2,832,302 and imported by non-licensees	3,660		3,104		6,349	
Not coming within Gegauf Pat. No. 2,832,302	13,319		13,924		11,349	
Replaceable Cam		37,129		29,698		26,395
Total		56,180		50,781		67,168

[fol. 2589] IN UNITED STATES DISTRICT COURT

GOVERNMENT'S EXHIBIT 195 (S-29)

Exhibit S-29
(under Par. 131)

Number of Multiple-Cam European Zigzag Sewing Machines Imported into the United States which Come Within Gegauf Patent No. 2,832,302, set forth by Manufacturer and Trade Name

		1957	1958	1959
Licensed				
Gegauf	Record and Favorit	1,600	3,405	2,150
Vigorelli	Robot	472	400	
Gritzner-Kayser	Lady Kenmore		250	20,925
	Total	2,072	4,055	23,075
Not Licensed				
Husqvarna	Class 21 A	2,500	3,021	5,500
	Class 51	750		700
Phoenix	Model 283	410	83	149
	Total	3,660	3,104	6,349
	Grand Total	5,732	7,159	29,424

[fols. 2590-2674] IN UNITED STATES DISTRICT COURT

GOVERNMENT'S EXHIBIT 196 (S-30)

Exhibit S-30
(Under Par. 131)

Number of Multiple-Cam European Zigzag Sewing Machines Imported into the United States which do not come within Gegauf Patent No. 2,832,302, set forth by Manufacturer and Trade Name

		1957	1958	1959
Borletti		2,909	500	625
Gritzner-Kayser	White Model 666	1,400		
Pfaff	Models 260 and 360	9,010	13,424	10,714
Turissa	Novomatic			10
	Total	13,319	13,924	11,349

[fol. 2675]

In United States District Court

Government's Exhibit 197 (S-86)

Exhibit S-86
(Par. 147)

Manufacturer	Model Name	Type of Machine	Price
Turissa	Turissa Novomatic	Multiple Cam	$349.50
Gritzner-Kayser	White Automatic Model 667	Multiple Cam	344.00
Vigorelli	Vigorelli Robot	Multiple Cam	339.50
Pfaff	Pfaff Automatic 360	Multiple Cam	339.00-300.00
Necchi	Necchi Supernova	Replaceable Cam	339.00
Bernina	Record and Favorit	Multiple Cam	329.50
Pfaff	Pfaff Automatic 260	Multiple Cam	329.00-300
Borletti	Borletti New Home Model 1102	Multiple Cam	329.00
Tavaro	Elna Supermatic	Replaceable Cam	300.00
Sankyo Seiki	Consolidated "770" (Old and New Design)	Multiple Cam	290.00-190.00
Husqvarna	Viking Model 21A	Multiple Cam	289.00
Aichi Kogyo	Morse Duomatic	Replaceable Cam	280.50
Nippon	Brother Super Flairmatic 190B Model	Manual	269.95
Pfaff	Pfaff Automatic 360	Multiple Cam	268.97
Pfaff	Pfaff Automatic 260	Multiple Cam	265.00
Tavaro	Elna Supermatic	Replaceable Cam	264.95
Sankyo Seiki	Consolidated "990" (Old and New Design)	Multiple Cam	250.00-150.00
Sanshin	Universal Two Selector Handle Model	Multiple Cam	250.00
Husqvarna	Husqvarna Class 19	Manual	250.00
Gritzner-Kayser	Lady Kenmore	Multiple Cam	248.00
Nippon	Brother Pacesetter 200	Multiple Cam	239.00
Adler	Adlermatic Model 589A	Replaceable Cam	228.00
Anker Phoenix	Phoenix Automatic Model 283	Multiple Cam	220.00
Aichi Kogyo	White Model 670	Replaceable Cam	209.95
Sanshin	Universal Single Dial Model	Multiple Cam	206.00
Marusen	Kenmore Model F	Replaceable Cam	204.95

Manufacturer	Model Name	Type of Machine	Price
Koyo Seiko	Free Westinghouse Model 803A	Multiple Cam	200.00
Kyukoto	Modern Model 116	Multiple Cam	199.95
Anker	Anker Model RZK	Replaceable Cam	192.50
Sanshin	Gimbel's Single Dial	Multiple Cam	189.95
Nippon	Brother Selectomatic 90	Multiple Cam	189.00
Tavaro	Elna Zigzag	Manual	184.00
Nippon	Brother Selectomatic Model 100	Multiple Cam	180.00
Nippon	Brother Super Wizard	Multiple Cam	159.95
Fukoku	Vogue Stitch Model 88	Multiple Cam	159.50-99.50
Nippon	Brother Galaxie Model 230	Replaceable Cam	159.00
Happy	Montgomery-Ward Automatic	Replaceable Cam	155.00
Gritzner-Kayser	White Automatic Model 666	Multiple Cam	150.00
Happy	Signature 23 Jewel Automatic	Replaceable Cam	149.95
Sanshin	Fleetwood Zigzag	Multiple Cam	148.00
Nippon	Brother Electra Model 140	Manual	140.00
Nippon	Brother Sovereign Model 170	Multiple Cam	139.95
Nippon	Brother Coronado Model 250	Multiple Cam	139.95
Koyo Seiko	Free Westinghouse Model 603	Manual	139.50
Kyukoto	Vogue Stitch Model D	Multiple Cam	139.50
Manufacturer unknown	Signature 7 Jewel Automatic	Replaceable Cam	129.00
Sankyo Seiki	Consolidated Sewmor Model 770	Multiple Cam	129.00
Sankyo Seiki	Consolidated Belair Model 740	Multiple Cam	129.00
Sankyo Seiki	Consolidated Belair Model 990	Multiple Cam	129.00
Sanshin	Universal Design-O-Matic	Multiple Cam	123.50
Banshu	New Home Model 8033	Multiple Cam	110.00
Feather	Universal TViewer Model FSZ 120	Multiple Cam	96.20
Kyukoto	Alden's Automatic Cam 3-in-1	Multiple Cam	93.10
Nishizawa	Montgomery-Ward Signature Model URR-789A	Manual	84.95
Koyo Seiki	New Home Model 6033	Manual	80.00

[fols. 4986-5001] IN UNITED STATES DISTRICT COURT

GOVERNMENT'S EXHIBIT 199

October 29, 1957.

Mr. G. Kirker,
Deriaz, Kirker & Cie,
Rue Du Mont-Blanc 14,
Geneva, Switzerland.

Dear Mr. Kirker:

Gegauf's U.S. Patent Application Serial No. 358,377.

Thank you for your letter of October 25, Ref. K/JP, giving us a résumé of your talks with Mr. Willi.

The U.S. Application Serial No. 358,377 of Gegauf has been examined by us and we find that this single application is based upon two Swiss patent applications, namely Serial No. 80,461, May 31, 1952 and Serial No. 91,361, April 22, 1953. There exists another U.S. Gegauf application Ser. No. 435,832 which we have not seen but which we presume corresponds to a Swiss application of June 18, 1953 and a British patent No. 755,891.

Mr. Strauss, the U.S. Patent Agent of Gegauf, advises us that he has prepared and sent to Mr. Gegauf for execution a third U.S. patent application which claims certain features which the U.S. Patent Office would not allow him to claim in application No. 358,377. This we had not known previously. In other words this third unfiled [fol. 5002] U.S. application has been carved out of U.S. application No. 358,377.

The second U.S. application No. 435,832 we believe relates to the idea if having two zigzag mechanisms, one for fancy stitching and one for the usual zigzag stitching with means for shifting at the will of the operator from one mechanism to the other. If this is the "divisional" application to which Mr. Gegauf refers, then we are not and we are now of the opinion that it is interested in it and it is not necessary that it be included in the proposed agreement.

We are, however, interested in acquiring ownership to

the third unfiled U.S. patent application as it discloses and claims material taken from the original U.S. application No. 358,377, about which we have all along been negotiating. Without having this, the acquisition of the original application would be of only small value to us, if any.

As to the second point, we would if necessary, agree to permit Necchi and Pfaff in addition to Vigorelli to continue to sell their respective machines in the United States without fear of being charged with infringement of the claims which may be allowed as a result of U.S. patent application No. 358,377.

The third point, which relates to the value to be placed upon application No. 358,377, we have to say that we would be willing to pay $62,500 for the outright sale of application No. 358,377 to Singer. If you find it necessary we authorize you to go as high as $75000 for the outright sale to Singer.

[fol. 5003] We suggest that you again contact Mr. Willi and make known to him our position in this matter, viz.:

Singer will accept the U.S. patent application Serial No. 358,377 as it now stands, together with any divisional applications which may be carved directly therefrom.

Singer will not ask that Gegauf's U.S. application No. 435,832 be included in the agreement.

Singer will agree to permit Necchi, Pfaff and Vigorelli to continue to sell their respective sewing machines in the United States as far as U.S. Patent application No. 358,377 is concerned.

Singer will pay $62,500 for the outright sale of patent application No. 358,377 by Gegauf to Singer. If necessary, you are authorized to offer $75,000 for the application.

[fol. 5004] * In view of our concessions we hope that you can obtain acceptance of our above proposal.

Yours very truly, The Singer Manufacturing Company, ——, ——, Patent Department.

CC: Mr. M. L. Waterman.

"* We are only repeating when we say again that standing alone we are still of the opinion, even after have examined the file at Washington, the patents ultimately secured are

[fol. 5005]

IN UNITED STATES DISTRICT COURT
GOVERNMENT'S EXHIBIT 200

Now the great Slant-O-Matic has two t

All 3 machines have the SINGER Slant-Needle that makes your sewin

New! SLA
machine. H
lower pric
front of the

New! SL
machine
lower pric
front of th

New! SLA
stitching m
takes a zig
Like its t

...ew stitches, just by "learning" a knob. Also mending/buttonholing . . . even button sewing! Because it has a gear motor drive (instead of a belt) the SLANT-O-MATIC never slips or stalls. And no other automatic machine can match its smooth, fine straight-stitching.

...ll the features & beauty of ... at home, the name of your...

SINGER SEWING CENTER

Also headquarters for SINGER® Vacuum Cleaners
Listed in your phone book under SINGER SEWING MACHINE CO.
®TM Trademark of the SINGER MANUFACTURING COMPANY

SINGER offers a machine for e

THIS ADVERTISEMENT APPEARS IN THE FOLLOWING MAGAZINES
AND WILL BE SEEN BY **30,624,000** PEOPLE

MAGAZINE	DATE ON SALE	MAGAZINE	DATE ON SALE
SATURDAY EVENING POST	April 29, 1950	WOMAN'S DAY	April 21, 1950
LIFE	April 24, 1950	TRUE STORY	May 4, 1950
LOOK	April 25, 1950	PARENTS	April 25, 1950
LADIES' HOME JOURNAL	April 28, 1950	FARM JOURNAL	May 10, 1950
McCALL'S	April 28, 1950	SUCCESSFUL FARMING	May 11, 1950
GOOD HOUSEKEEPING	April 21, 1950	PROGRESSIVE FARMER	May 11, 1950
EVERYWOMAN'S FAMILY CIRCLE	April 23, 1950		

1348

IN UNITED STATES DISTRICT COURT
GOVERNMENT'S EXHIBIT 200

Q-Matic has two talented new sisters!

NGER Slant-Needle that makes your sewing easier and better—

machine. Has many features of the SLANT-O-MATIC, at a lower price. Simplified threading, handy "drop-in" bobbin in front of the needle, fine, smooth straight-stitching. Comes with a set of FASHION-Dises for fancy stitching. Just clip a disc onto the machine. Presto! You're in business. Curtains, things for the family. It's easy to operate automatic machine sewing with this

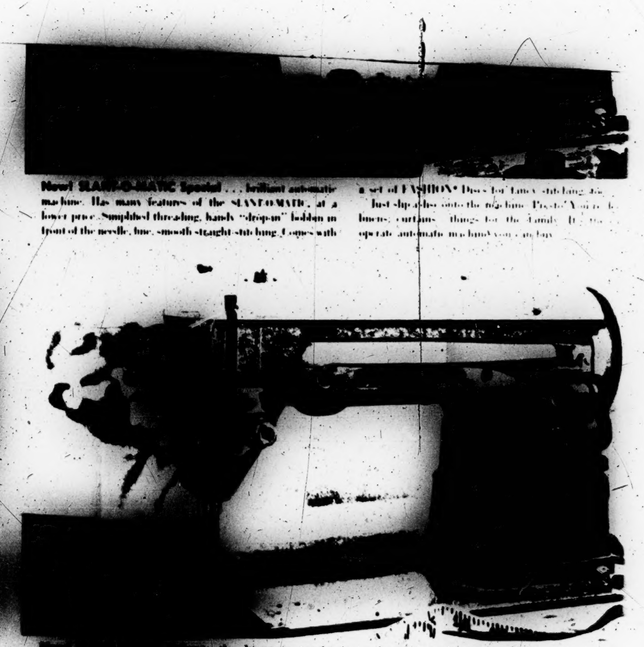

...ew stitches, just by "learning" a knob. Also mending/buttonholing . . . even button sewing! Because it has a gear motor drive (instead of a belt) the SLANT-O-MATIC never slips or stalls. And no other automatic machine can match its smooth, fine straight-stitching.

...ll the features & beauty of ... at home, the name of your...

SINGER SEWING CENTER

...® Vacuum Cleaners
...ook under SINGER SEWING MACHINE CO.
...ademark of the SINGER MANUFACTURING COMPANY

SINGER offers a machine for every purse and every purpose. See the new SPARTAN® Portable, only

THIS ADVERTISEMENT APPEARS IN THE FOLLOWING MAGAZINES
AND WILL BE SEEN BY **30,624,000** PEOPLE

...ZINE	DATE ON SALE	MAGAZINE	DATE ON SALE
...DAY EVENING POST	April 29, 1950	WOMAN'S DAY	April 21, 1950
...'S HOME JOURNAL	April 28, 1950	TRUE STORY	May 4, 1950
...LL'S	April 28, 1950	PARENTS	April 25, 1950
...OUSEKEEPING	April 21, 1950	FARM JOURNAL	May 10, 1950
...WOMAN'S FAMILY CIRCLE	April 23, 1950	SUCCESSFUL FARMING	May 11, 1950
		PROGRESSIVE FARMER	May 11, 1950

of doubtful value, but that in conjunction with others that we have, they assume greater worth and then only after we have expended a considerable sum to prove their worth.

Perhaps better not to write. I leave it to you.

W.

Destroy this.

W.

[fol. 5006] IN UNITED STATES DISTRICT COURT

GOVERNMENT'S EXHIBIT 201

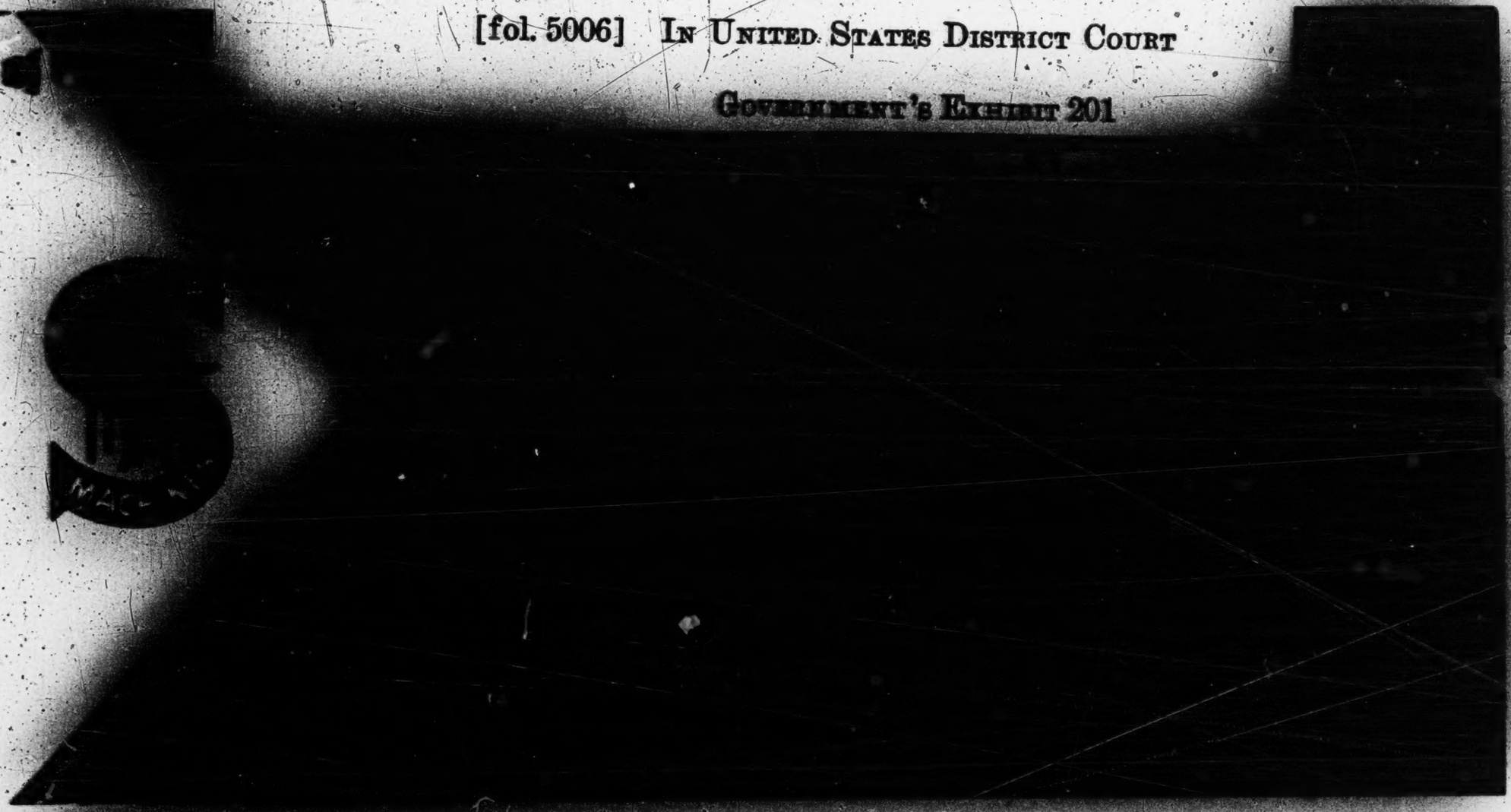

THE SINGER MANUFACTURING COMPANY

[fol. 5007]

Instructions for using

SINGER*

*SLANT-O-MATIC**

[fol. 5008]

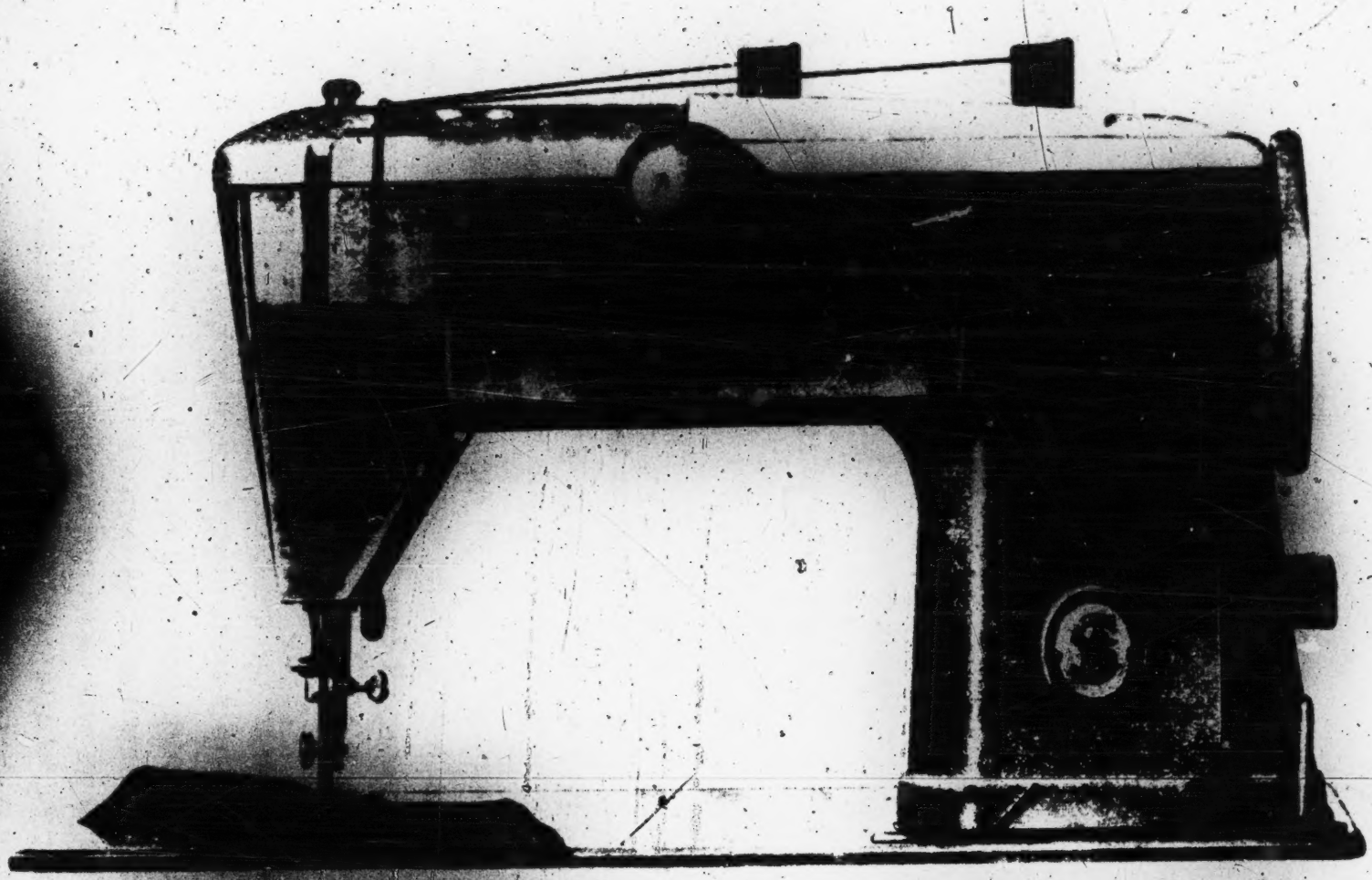

The *SLANT-O-MATIC* –the greatest sewing machine ever built!

*A Trademark of THE SINGER MANUFACTURING COMPANY

[fol. 5009]

The SINGER *SLANT-O-MATIC*
the greatest sewing machine ever built . . .

From the moment you see the new *SLANT-O-MATIC*, you'll know it's excitingly *different*. You'll marvel at its automatic sewing . . . its almost unbelievable ease of operation . . . the remarkable services it performs. You'll delight in its sure, beautiful stitching. The only automatic zigzag machine for home use made entirely in America, it outsews all other machines in both straight and fancy stitching.

● *World's first* automatic with a slant needle and gear drive. Sewing is easier, sewing smoothest ever. No slipping or stalling.

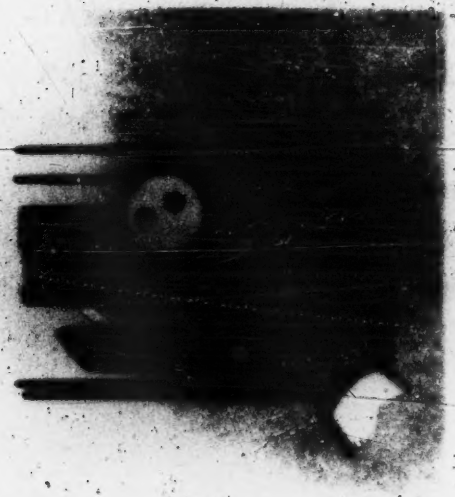

● *World's first* automatic with double easy threading. Has built-in threading chart, handy "drop-in" bobbin in *front* of needle!

● *World's first* automatic with a built-in eye-level stitch chart, that lets you "tune" the knob for whatever fancy stitch you want!

Add to these major developments in sewing machine design the following ADVANCED features, and you have a machine far ahead in design, unequalled in performance.

Copyright © 1958 by The Singer Manufacturing Company

[fol. [illegible]]

- [illegible] TYPE multi-purpose calibrated throat plate, lever operated, simplifies [illegible].
- [illegible] face plate swings open for easy [illegible].
- [illegible] CONTROL of stitch length ensures perfect satin stitching.
- [illegible] Straight Stitching.
- [illegible] focused on sewing area.
- NEW NEEDLE CLAMP holds one or two regular needles—same or different sizes for exciting twin needle stitching.
- ALL MECHANISM completely enclosed.
- NEW ADJUSTABLE HINGED zipper and cording foot.
- NEW SPECIAL PURPOSE FOOT.
- NEW SEAM GUIDE.

TO GET THE MOST ENJOYMENT
FROM YOUR [illegible]

Take advantage of the free sewing lessons to which you are entitled! Skilled, [illegible] teachers will give you personal guidance and assist you in learning the fundamentals of home sewing.

[fols. 5011-5132]

SINGER SERVICE

Wherever you go you will find expert, dependable SINGER* Service close at hand. SINGER is interested in helping you keep your SINGER Sewing Machine in top running condition. That is why you should always call your SINGER SEWING CENTER if your machine ever requires adjustment or repair. Only from your SINGER SEWING CENTER can you obtain the services of a trained SINGER repair man and warranted SINGER* parts.

EVERYTHING FOR THE WOMAN WHO SEWS

The answer to your sewing needs is at your SINGER SEWING CENTER. There you will find a wide choice of sewing aids, notions, sewing instructions and services. Look for the famous red "S" and SINGER trademarks on your SINGER SEWING CENTER and the ever ready SINGER Service Car. See phone book under SINGER SEWING MACHINE CO. for address nearest you.

1349

GOVERNMENT'S EXHIBIT 203

VOGUE PATTERN BOOK, JUNE - JULY 1957

Never before—such ease! such beauty! such a choice!

4 Fabulous SINGER Sewing Machines

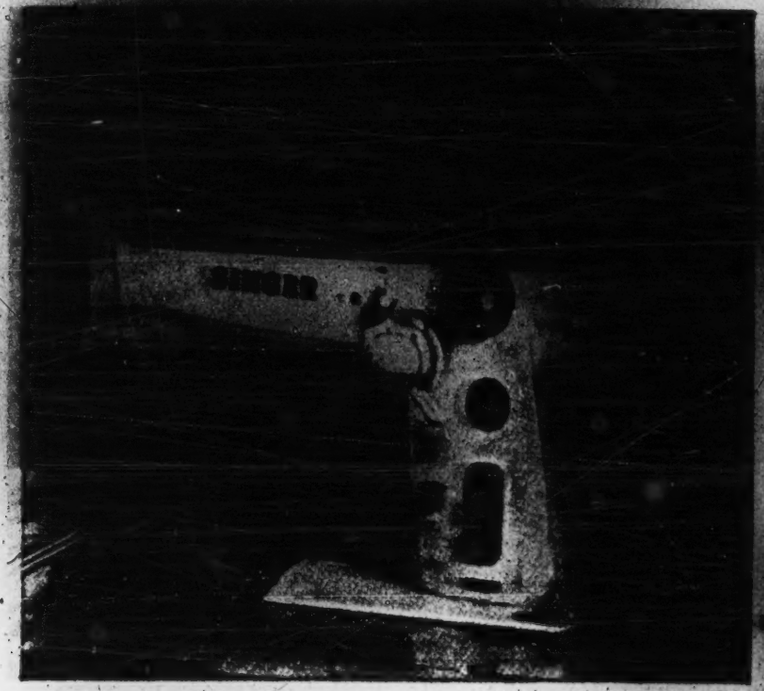

1. New Swing-Needle SINGER Automatic —with Finger-Tip Control

Does hundreds of stitches at the flick of a lever! Want to switch from straight stitching to scallops—zigzags—embroidery—monograms—darning—overcasting? Simply flick one or more of these little levers . . . and you're off! You can do all the popular stitches or create your own combinations—*by the hundreds*—with this simple SINGER Automatic!

With this amazing new SINGER Automatic you can do more kinds of decorative stitching—*more simply*—than with any other machine.

That's because it has a special Finger-Tip Control that lets you pick out the stitch you want—*and start doing it*—at the flick of a lever. Puts literally hundreds of fashion touches at your finger tips!

It even makes straight stitching smoother, surer than any other automatic. Has twin-needle for two-color sewing. New wide-range speed control. Every kind of de luxe feature! In new "designer" cabinets or full-size portable case.

Prices on SINGER* Sewing Machines start at $99.90

Easy terms—liberal trade-in allowances

Prices slightly higher in some areas.

SINGER SEWING CENTERS

*A Trademark of THE SINGER MANUFACTURING COMPANY

See phone book under SINGER SEWING MACHINE CO. for address nearest you.

2. Exclusive Slant-Needle* SINGER—*only* machine with a needle that slants toward you. Lets you see more clearly, feed fabric more easily, sit more restfully. In oyster-white and beige, beige, or black. Comes with Automatic Zigzagger attachment for decorative stitching.

3. Standard SINGER Automatic—gives you the joys of zigzag Swing-Needle* sewing at an "easy" price. Does all kinds of fancy stitches —*automatically*. Mends, darns, hems, too. Sews faithfully—as only a SINGER can. Smart beige or black. In newest cabinets or portable case.

4. New extra-value SINGER Portable—an unbeatable buy! This round-bobbin beauty sews forward and back. Has sewing light, simplified threading, handsome case. One of many fine Straight-Needle models. Choose the new SINGER that fits *your* needs—*your* purse!

1350

[fol. 5134] IN UNITED STATES DISTRICT COURT

GOVERNMENT'S EXHIBIT 205

Every Independent

ADVERTISED IN LIFE

100% FULLY AUTOMATIC
ZIG-ZAG AT A NEW LOW PRICE

SENSATIONAL SELECT-O-MATIC

THE PERFECT MACHINE TO ROUND OUT YOUR PRODUCT LINE!

Only **BROTHER** can offer you a 100% fully automatic zig-zag at such a unbeatable price . . . a price everyone can afford . . . a price that gives you a fantastic margin of profit and gives your customers top quality. Here's a precision-perfect sewing machine with every famous seal . . . fully guaranteed for a lifetime of trouble-free performance. This is THE machine that rounds out your line . . . it's so value-packed with Brother's exclusive, *built-in* cams and other unbeatable features of the future. And now . . . prices are better better than ever for you to make more sales . . . more profits from the world's most fabulous budget automatic sewing machine!

With Brother's complete line you have a machine to fit *every* budget AND you're backed by Brother's famous merchandising program and the world renowned Brother name . . . your guarantee of *quality . . . beauty . . . precision performance!*

WRITE OR PHONE YOUR NEAREST DISTRIBUTOR

SELECT-O-MATIC
. . . PACESETTER
. . . THE PERFECT PAIR FOR PROFITS!

Make sure you've placed your orders for the Pacesetter . . . the only machine in the world with the unbelievable computer brain that *thinks and sews* without cams or buttons. Just set the dial and watch . . . and watch it sell itself!

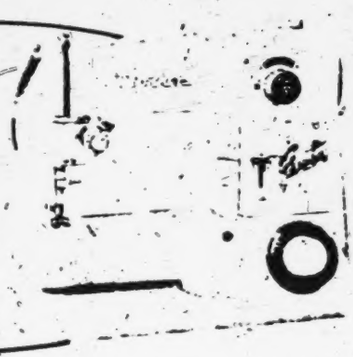

BROTHER

122 West 27th St., New York 1, N. Y.

BROTHER INTERNATIONAL CORP. OF CA
1058 S. Flower St., Los Angeles, Cal.

May 1956

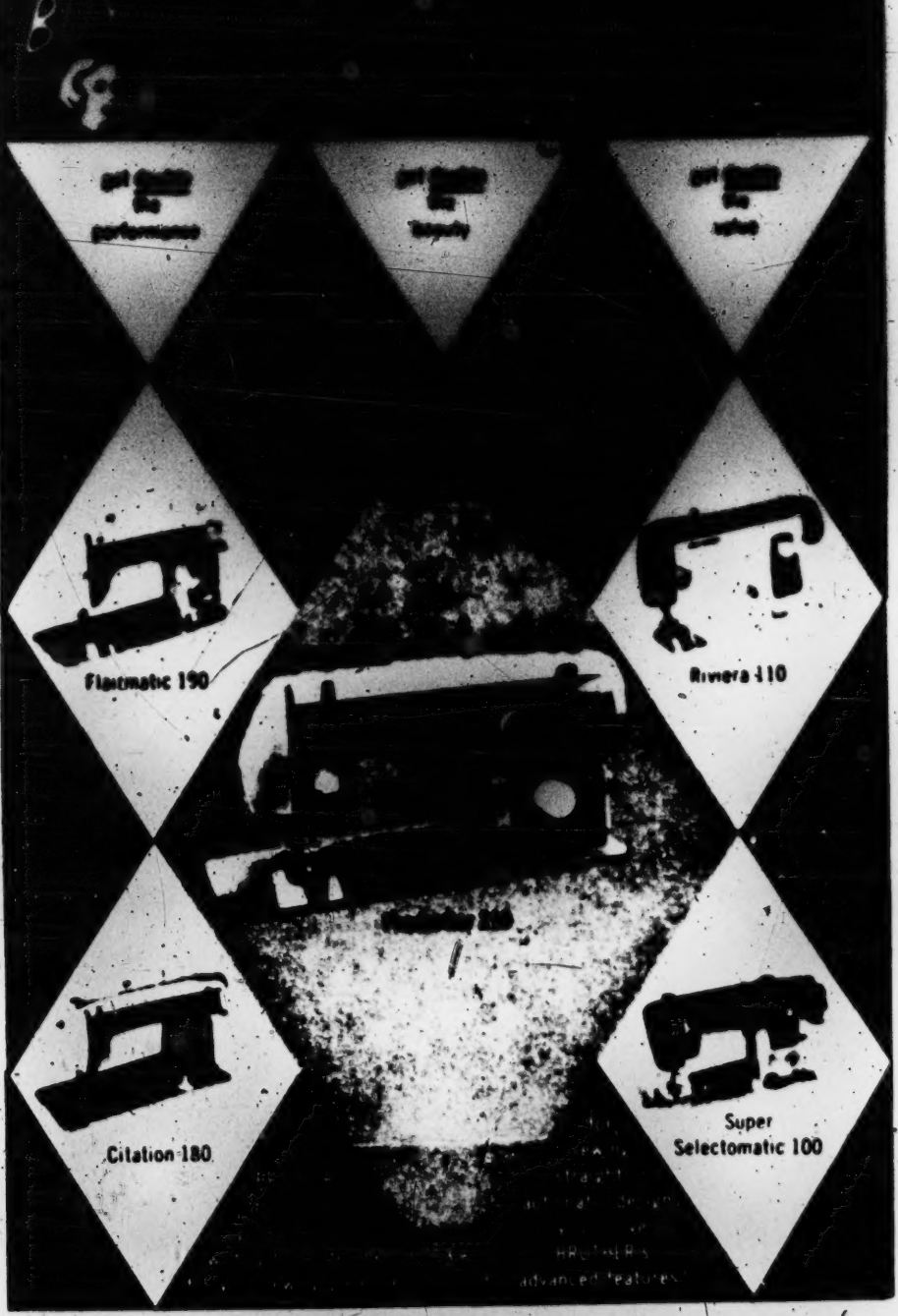

buy **any** of these newest BROTHER cabinets... you'll get **double** your money's worth. Edward J. Wormley designed them all!

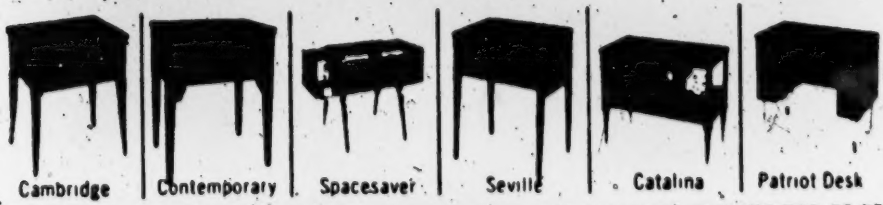

for free literature on newest BROTHER sewing machines, cabinets, and knitters write "literature," Dept. P 8 Brother International, 122 W. 27th St., N.Y., N.Y.

Companion

BROTHER® *Sewing Machines*

NEW YORK, 122 W. 27th St • PHILADELPHIA, 49th & Aspen Sts
LOS ANGELES, 1058 S. Flower St. • NEW ORLEANS, 2001 Gentilly Blvd

BROTHER-KNIT the amazing new home appliance with which anyone can make beautiful hand-knits in minutes—even if you've never knitted before! It's 100% automatic . . . so economical . . . and so much fun.

Guaranteed by Good Housekeeping

PARENTS'

USM TESTED

GOVERNMENT'S EXHIBIT 205D

World Famous BROTHER Sewing Machines

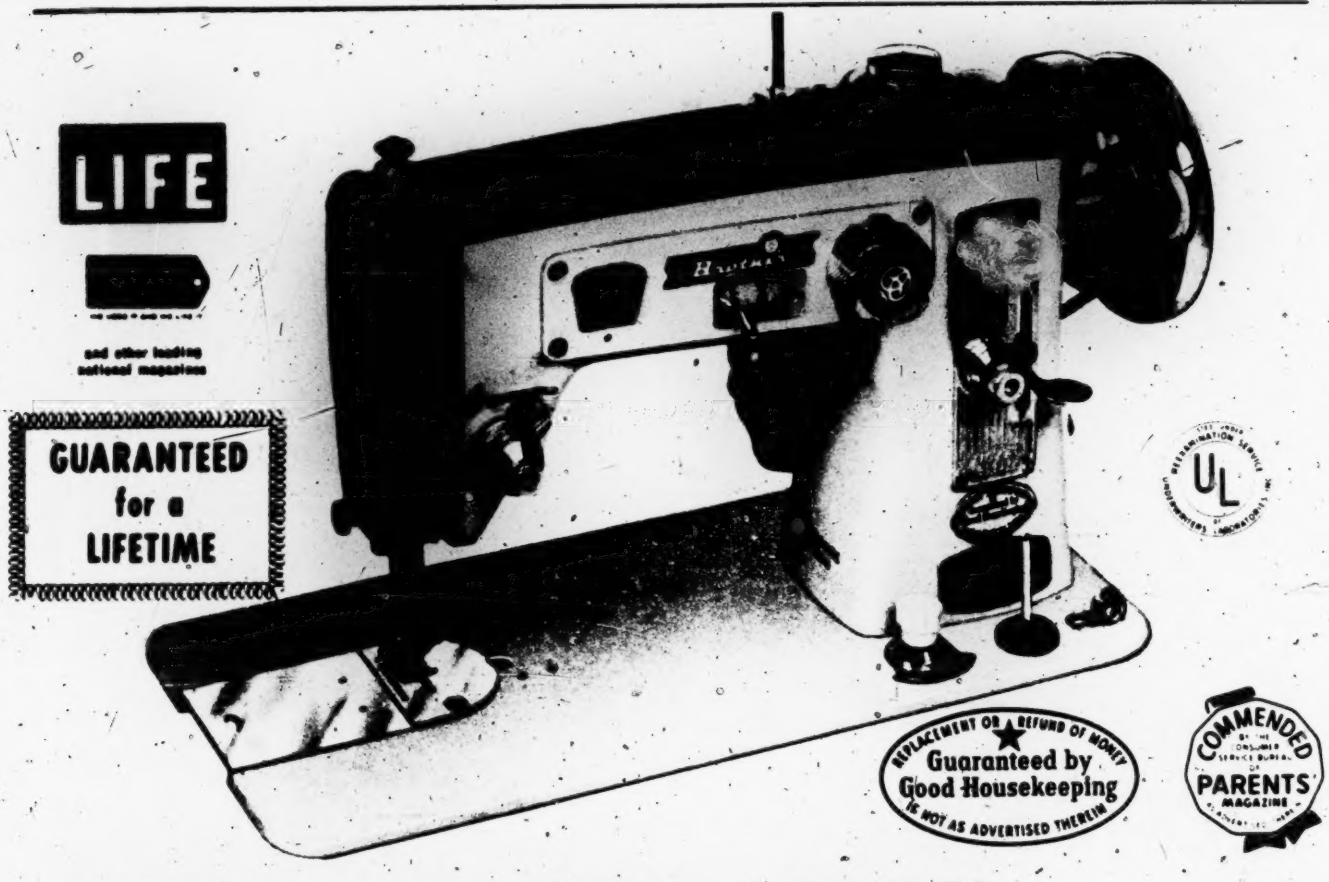

BROTHER SELECT-O-MATIC*—MODEL 90

THE WORLD'S FIRST & ONLY 100% COMPLETE BUILT-IN CAM AUTOMATIC ZIG-ZAG WITH THE SELECT-O-MATIC DIAL!

These amazing features are Exclusive with Brother

★ Stitch-width Indicator — shows the width of the stitch on the "dial window."

★ Needle Control Lever — instantly changes needle position to achieve numerous design variations.

★ Automatic Control — permits instant changeover from straight sewing to full automatic zig-zag operation. without attachments.

★ Automatic Selector — instantly changes stitch pattern to the one of your choice.

★ Stitch Regulator — controls forward & reverse sewing and regulates stitch length as desired.

★ Automatic Stitch Indicator — gives perfect control of pattern designs in decorative stitches.

★ Available in two-tone streamline design.

BROTHER World's Finest Precision-built SEWING MACHINES

1353

New! SINGER Slant-Needle Series

Now there are 3 machines with the exclusive **SINGER** Slant-Needle that makes all sewing easier and better. All three made in America by American craftsmen.

SINGER exclusive SLANT NEEDLE machines come in cabinet or lightweight portable models.

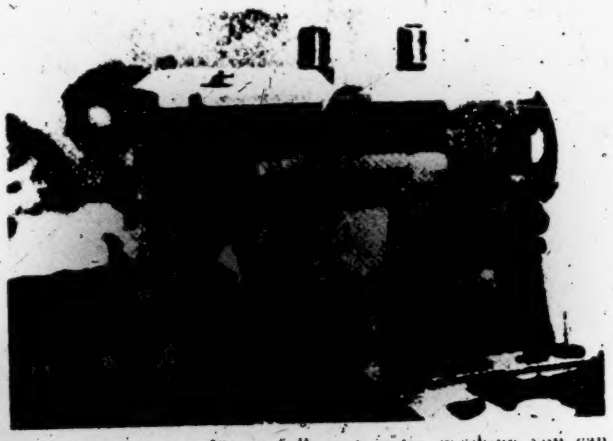

The Great SLANT-O-MATIC*

Finest fully automatic machine you can own. Smoothest straight stitching, decorative stitching, mending, darning, button sewing—just by "turning" a knob.

New! SLANT-O-MATIC Special

Brilliant automatic machine. Has many SLANT-O-MATIC features at a lower price. Comes with a set of FASHION* Discs you slip onto the machine for fancy stitching.

SINGER offers a sewing machine for every purse and purpose. See the new SPARTAN* Portable . . . priced at only $69.50

SINGER SEWING CENTERS

Also headquarters for SINGER* Vacuum Cleaners

Listed in your phone book under SINGER MANUFACTURING CO.

*A Trademark of THE SINGER MANUFACTURING CO.

Singer Sewing Machine Company
149 Broadway, New York 6, N. Y.

Please send me additional information on the new Slant-Needle Sewing Machines.

Name_____

Street_____

City_____ County_____ State_____

New! SLANT-NEEDLE Deluxe

Ultimate in straight-stitching machines. And like its sister machines, has [illegible] threading chart, front drop-in bobbin, and gear motor drive . . . never [illegible]

EXHIBIT 1
U.S. Dist. Court
S.D. of N.Y.
GOVERNMENT 208

Government's Exhibit 208B

...and for my big gift

More women will wish for—and get—a SINGER this Christmas than any other machine and here's why...

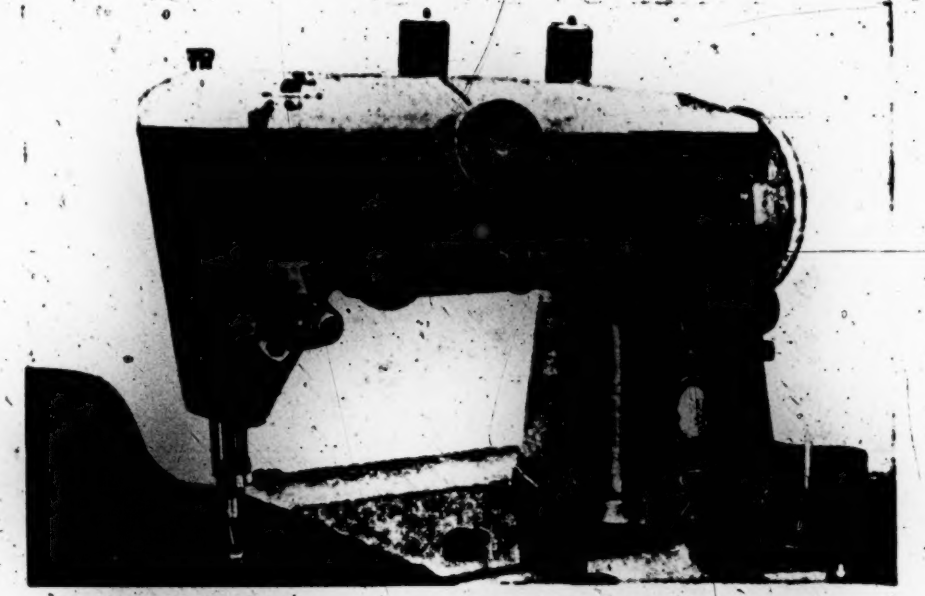

Famous SLANT-O-MATIC*. Here is the most talented machine you can buy. Just by "tuning" a knob you can create thousands of fancy stitches. Do practical every-day sewing. Also sew buttons, buttonholes, do darning—even blind stitching. Cabinet, portable styles. Made in America.

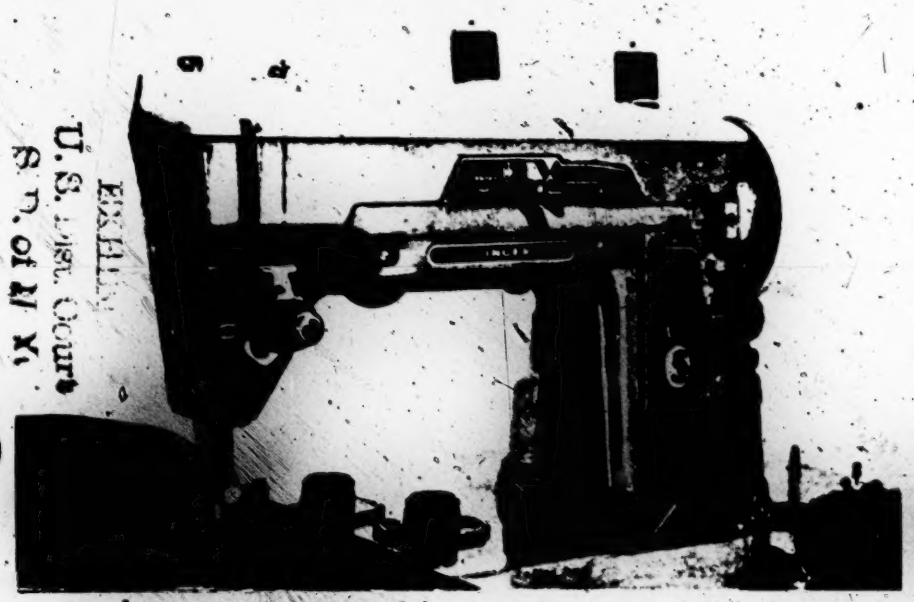

New! SLANT-O-MATIC Special . . . a brilliant new machine that gives you many of the superb features of the SLANT-O-MATIC at a lower price. And it comes with a set of FASHION* Discs you slip on the machine for fancy stitching. Cabinet, portable styles. Made in America.

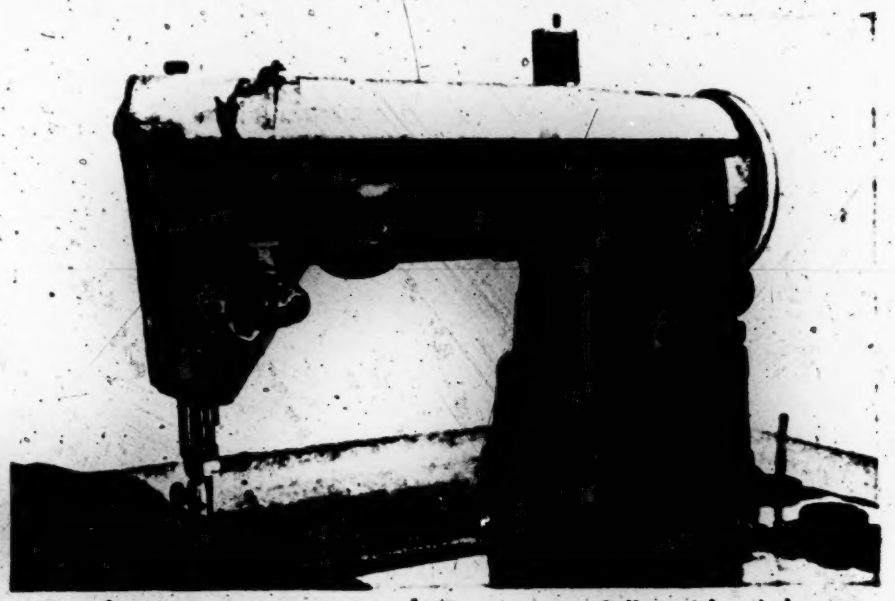

New! SLANT-NEEDLE Deluxe! This greatest-of-all straight-stitch machines has foolproof threading; exclusive slant-needle; front "drop-in" bobbin. Never slips, or stalls. And a zigzag attachment for fancy stitching is included. Cabinet, portable styles. Made in America.

EXHIBIT
U. S. Dist. Court
S. D. of N. Y.
208B

EXHIBIT
U.S. Dist. Court
S.D. of N.Y.
204 B

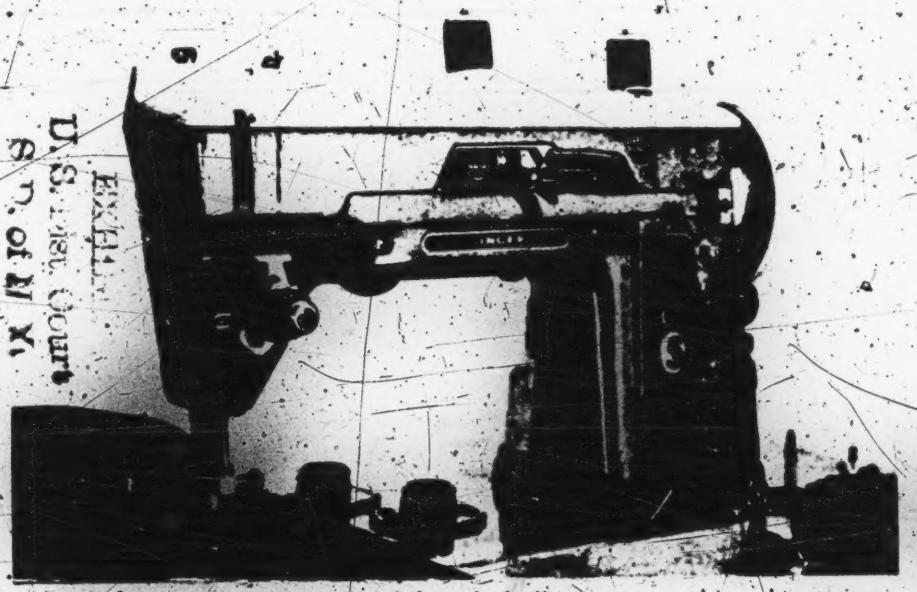

New! SLANT-O-MATIC Special . . . a brilliant new machine that gives you so many of the superb features of the SLANT-O-MATIC at a lower price. And it comes with a set of FASHION Discs you slip on the machine for fancy stitching. Cabinet, portable styles. Made in America.

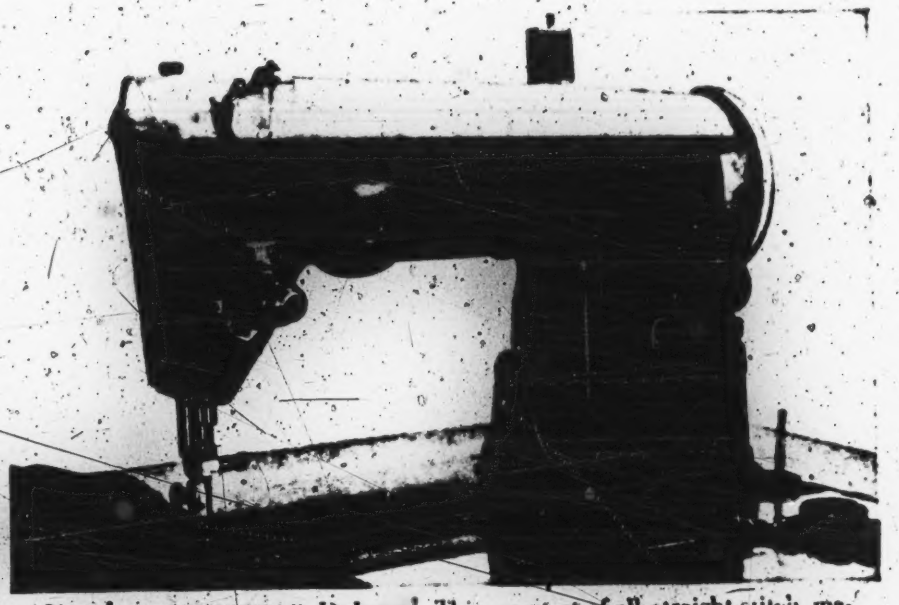

New! SLANT-NEEDLE Deluxe! This greatest-of-all straight-stitch machines has foolproof threading; exclusive slant-needle; front "drop-in" bobbin. Never slips or stalls. And a zigzag attachment for fancy stitching is included. Cabinet, portable styles. Made in America.

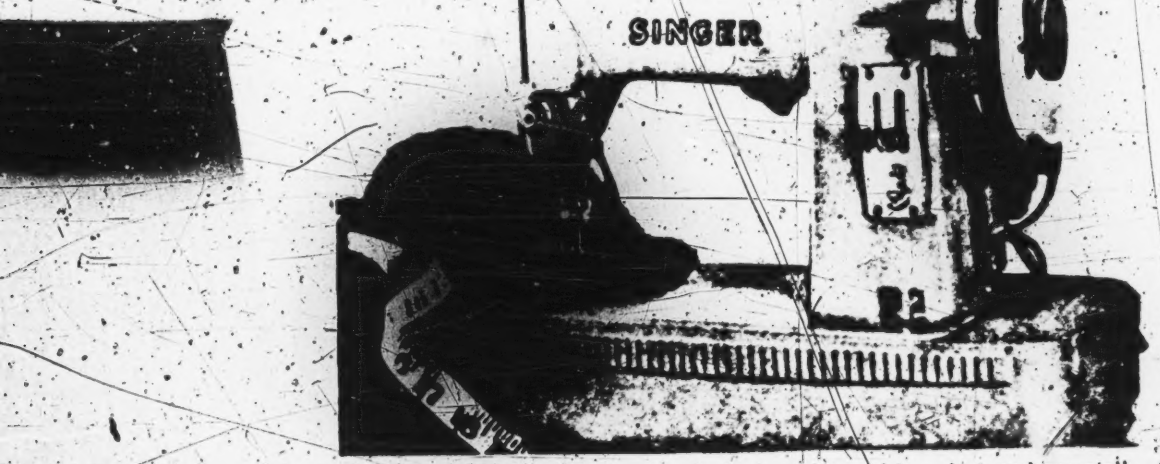

Young-Budget SINGER® . . . a sleek new machine designed specially for young homemakers! Easy to run—even most beginners make curtains, bedspreads and things for the family right off. And, young husbands are naturally drawn to the tiny price. Cabinet, portable styles. Made in Great Britain.

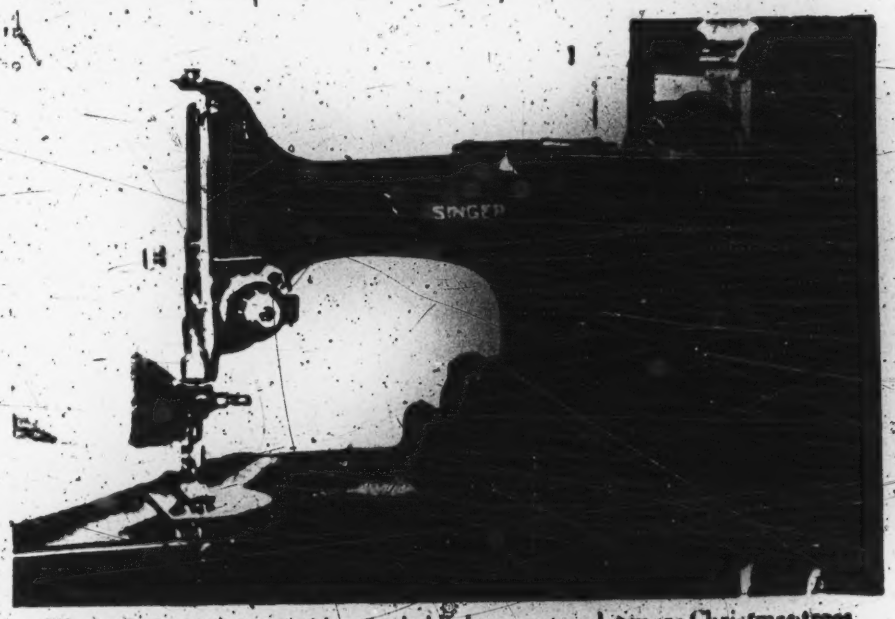

The FEATHERWEIGHT® has probably been put under more Christmas trees than any other electric portable in the world. And no wonder. Weighs only 11 pounds, yet does the job of a full-sized SINGER® Sewing Machine. Sews perfectly on every fabric. Compact for storage, too. Made in America.

And you can tell Santa . . . SINGER low prices start at $59.50 for the SPARTAN® model.

SINGER SEWING CENTERS

Also headquarters for SINGER® Vacuum Cleaners
Listed in your phone book under SINGER SEWING MACHINE CO.
®A Trademark of the SINGER MANUFACTURING CO.

Ad No. 635
Ladies' Home Journal—December, 1959
McCall's—December, 1959
Progressive Farmer—December, 1959
Saturday Evening Post—December 5, 1959
Life—December 7, 1959
Look—December 8, 1959

[fol. 5146] IN UNITED STATES DISTRICT COURT

GOVERNMENT'S EXHIBIT 2080

As Recorded 3/19/59

Singer Slant Needle Family
Announcement—"Rose" Film #2230-120
(Revision of Film #2197-120)

Video	Audio
A Single Rose Falls From Top of Frame . . . to Center Frame Left. This is Quickly Followed by Two More.	(Music Under)
Slant-O-Matic—with Super: *Slant-O-Matic* Dissolves onto First Rose. Slant-O-Matic Special—with Super: *Slant-O-Matic Special*—Dissolves onto Second Rose. Slant-Needle Straight Stitching Machine—with Super: Slant-Needle *Deluxe*— Dissolves onto Third Rose. Hold Three Machines.	*Announcer:* (Voice Over) Now there are *three!* *Woman:* (Voice Over) The Slant-O-Matic! The new Slant-O-Matic Special! The new slant-Needle Deluxe!
Machines Turn . . . so that Stitching End Is Toward Camera. Camera Moves in for CU Needle of Slant-O-Matic, Side View. Dissolve Front Elevation of Slant-O-Matic onto Side View . . . Dissolve Out Side View. With Super: *Slant-O-Matic.*	*Announcer:* (Over) Yes—now there are *three! Three* brilliant sewing machines in the new Singer Slant Needle Family! Now you can have Singer exclusive Slant-Needle action—— Singer superb Slant-Needle performance—for every kind of sewing! *Woman:* (Over) If you've been look at sewing machines—you've certainly seen the Slant-O-Matic—with features you've never seen in a sewing machine before!
(DS. To)	
Hand Selecting. Stitch from Stitch Chart . . . and Setting Dial.	Just set the Slant-O-Matic dial—and you can sew beautiful decorative stitches.
[fol. 5147] (DS. To)	
MCU Woman Sewing on Slant-O-Matic	Practical sewing is just as easy. If you want the world's finest sewing machine this is it! The incomparable Slant-O-Matic!
(DS. To)	
Rose—and to Beauty Shot Slant-O-Matic Special with Super: *Slant-O-Matic Special.*	And now Singer brings you many of these same remarkable features at a lower price—in the new *Slant-O-Matic Special!*
(DS. To)	
CU Needle Doing Straight Stitching CU Woman's Hand Holding Zigzag Fashion Disc. She Slips It into Machine.	The Slant-O-Matic Special—that gives you—smooth, trouble-free straight-stitching—and—a wide variety of beautiful decorative stitches, too. These are Fashion Discs . . . that slip into your machine . . .
(DS. To)	
CU Needle Sewing Decorative Stitch Pattern.	to let you do lovely decorative patterns like these——
(DS. To)	
CU Needle Overcasting Seam.	and handsome finishing stitches, too——

Video	Audio
(DS. To)	
CU Needle Sewing Button-Holes.	for overcasting seams, making button-holes.
(DS. To)	
Rose—and to CU Beauty Shot Slant-Needle Straight Stitching Machine—with Super: *Slant-Needle* Deluxe!	And here's the brand new Slant-Needle Deluxe—that gives you famous Singer straight stitching—the finest in the world!
(DS. To)	
Needle Doing Straight Stitching.	
(Cut To)	
CU Hand Opening Threading Chart.	Like the Slant-O-Matic . . . like the Slant-O-Matic Special the new Slant Needle Deluxe has a new built-in threading chart——
(Cut To)	
Woman's Hand Dropping in Bobbin	—a new drop-in bobbin in *front* of the needle——
[fol. 5148] (DS. To)	
MCU Woman Sewing—Straight Stitching.	—and a new gear motor drive for better control, smoother running performance.
(DS. To)	
Three Machines . . . with Roses . . . as in Opening but *No Titles Super:* Made in America by Singer.	*Announcer:* (Over) Yes, now there are three! Three brilliant new Slant-Needle Sewing Machines made in America—by American craftsmen—made for you by Singer! See them! Try them!—at your Singer Sewing Center now!
Bring Up Name *Singer*.	

[fol. 5149] IN UNITED STATES DISTRICT COURT

GOVERNMENT'S EXHIBIT 208D

As Recorded 10/9/59

Singer Christmas Catalogue B U.S.
Time: Two Minutes Film #2224-120

Video	Audio
There Appears—a Snowflake	*Music:* The Merest Little Tingling Phrase—Which Suspends With a Little Sort of Snow flake Sting
	Voice Over: Sparkling——
Now Bring in a Second Snowflake	*Music:* As Above
	Voice Over: Brilliant——
And—a Third	*Music:* As Above
	Voice Over: Beautiful!——
Now . . Let's Have a Little Snowstorm Around, Behind, Including the Three Flakes. All is Quickly Tiny Flakes. . . .	Music: A Tingling Swirl——
	Voice Over: Choose one for *Christmas* now!
. . . . Which Descend on a Stylized Little Singer Sewing Center, Seen in a Snowy World Slightly From Above	*Music:* A Bit More Swirl——
	Voice Over: Yes . . . at your Singer Sewing Center—choose *your* Singer for Christmas *now!* (Music Under—Continue Throughout)
Now—DS. to Live Action: CU Young Budget Singer in Room Setting, Th. gh We Don't See That Yet. Just a Warm Nice CU of Machine—With Some Material Under It's Needle Super: Young Budget Singer	*Voice Over:* This sleek Singer, for instance——
(DS. To)	—the Young Budget machine. It has a trim new look—a new soft-green color——
Now—Behind Machine . . Include a Young Mother and Her Daughter Hanging Curtains. Keep Machine in Foreground.	(XX) and it's built for the sewing needs of young families—priced for young pocket-books, too!
[fol. 5150] (DS. To)	
CU Machine and Case—Can We Somehow Keep it to Above Shot?	Here it is in portable style—with its matching green case——
Super: $12 *Down*	and with the Singer Budget Plan—just twelve dollars delivers it to your home.
(Wipe To)	
CU Featherweight Super: Featherweight Replace Super: *11 Pounds*	And here's another bright Singer portable—the famous Featherweight. It weighs a light eleven pounds——
(DS. To)	
CU Needle Stitching Heavy Snowsuit Fabric	yet it can stitch up a snowsuit (XX) Not in "A" Version
(DS. To)	
CU Needle Stitching on Tape in Snowflake Design	as easily as it works magic like this!

Video	Audio
(Wipe To)	
MCU Slant-O-Matic—Over Woman's Shoulder	And this is the most brilliant machine of them all——
Super: Slant-O-Matic	the Slant-O-Matic—with all of its fabulous features no other machine can match!
(DS. To)	
CU Woman's Hand Picking Stitch and Dialing	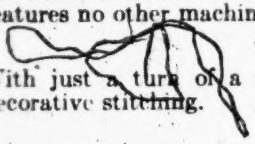 With just a turn of a dial—it lets you do decorative stitching.
(DS. To)	
CU Needle Doing Design—Another Snowflake—or Perhaps a Flower	Thousands of beautiful stitches are right at your fingertips.
(DS. To)	
CU Needle Straight Stitching	With just the turn of a dial you switch to smooth straight stitching—the smoothest in the world!
(DS. To)	
CU Beauty Shot Machine	If you'd like the finest machine ever made—it's the Slant-O-Matic. And look—the Slant-
[fol. 5151]	
DS. Through to Two Machines—the Slant-O-Matic Special—and the Slant-Needle Deluxe Super Names on Each.	O-Matic has two talented new *sister* machines——
	The new Slant-O-Matic Special—and the new Slant-Needle Deluxe. Both give you many of the Slant-O-Matic features—at a lower price.
Take Out Supers—and Super in Sync With Audio:	No machines can match them—because they're made in America—by American craftsmen—made for you by *Singer!* See them——
And *Made in America* (Snowflake Effect)	
And by Singer (Snowflake Effect)	
DS. Out Machines and Words——	(Music Begins to Come up a Bit)
And Swirl Flakes Again, Adding Others	See all the other brilliant new sewing machines, too——
And Descend on the Sewing Center as in Opening	at your Singer Sewing Center now!
Gracefully, But Pointedly, a Single Snowflake Now Comes in—Wiping Out Center.	Music Makes a Pointed But Graceful Little Point
	The Voice Over Returns:
	And by the way—prices at your Singer Sewing Center start at just $59.50—for the Spartan Portable!
Poised for Something—Which is *$59.50*	
A Significant Sparkle from the Snowflake	And the Music Finishes Brightly

[fol. 5152] IN UNITED STATES DISTRICT COURT

GOVERNMENT'S EXHIBIT 208E

Re-Recorded
5/20/59

Singer Slant-Needle Family
Announcement Film #2197-120

Video	Audio
A Single Rose Falls From Top of Fame . . to Center Frame Left. This is Quickly followed By Two More	(Music Under)
Slant-o-Matic—With Super: *Slant-o-Matic* Dissolves Onto First Rose Slant-o-Matic Special—With Super: *Slant-o-Matic Special*—Dissolves Onto Second Rose Slant-Needle Straight Stitching Machine—With Super: Slant-Needle Deluxe—— Dissolves Onto Third Rose Hold Three Machines	Announcer: (Voice Over) Now there are *three!* *Woman:* (Voice Over) The Slant-o-Matic! The new Slant-O-Matic Special! The new Slant-Needle Deluxe!
Machines Turn . . So That Stitching End Is Toward Camera. Camera Moves in for CU Needle of Slant-O-Matic, Side View Dissolve Front Elevation of Slant-O-Matic onto Side View . . Dissolve Outside View. With Super: *Slant-O-Matic*	*Announcer:* (Over) Yes—now there are *three! Three* brilliant sewing machines in the new Singer Slant Needle Family! Now you can have Singer exclusive Slant-Needle action—— Singer superb Slant-Needle performance—for every kind of sewing! *Woman:* (Over) If you've been looking at sewing machines—you've certainly seen the Slant-O-Matic—with features you've never seen in a sewing machine before!
[fol. 5153] (DS. To) Hand Selecting Stitch From Stitch Chart . . . CU—Main Setting Dial CU Fancy Stitch on Organdy CU—Straight Stitching on Seam Med. CU—Continue Fancy Stitch on Organdy:	With just the turn of a dial it lets you do thousands of decorative stitches! And it does your everyday practical work too. If you want the world's finest fully-automatic . . . sewing machine this is it! The incomparable Slant-O-Matic!
(DS. To) Rose—and to Beauty Shot Slant-O-Matic Special With Super: *Slant-O-Matic Special*	And now Singer brings you many of these same remarkable features at a lower price—in the new *Slant-O-Matic Special!*
(DS. To) CU Needle Doing Straight Stitching	The Slant-O-Matic Special—an automatic machine that gives you—smooth, trouble-free straight-stitching!——
CU Woman's Hand Holding Zigzag Fashion Disc. She Slips It Into Machine	and—a wide variety of beautiful decorative stitches, too. These are Fashion Discs . . . that slip into your machine . . .
(DS. To) CU Needle Sewing Decorative Stitch Pattern.	to let you do lovely decorative patterns like these——
(DS. To) CU Needle Overcasting Seam.	and handsome finishing stitches, too—

Video	Audio
(DS. To)	
CU Needle Sewing Button-Holes	for overcasting seams, making buttonholes.
(DS. To)	
Rose—and to CU Beauty Shot Slant-Needle Straight Stitching Machine—With Super: *Slant-Needle* Deluxe!	And here's the brand new Slant-Needle Deluxe—that gives you famous Singer straight stitching—the finest in the world!
(DS. To)	
Needle Doing Straight Stitching	
[fol. 5154] (Cut To)	
CU Hand Opening Threading Chart	Like the Slant-O-Matic . . . like the Slant-O-Matic Special the new Slant Needle Deluxe has a new built-in threading chart——
(Cut To)	
Woman's Hand Dropping In Bobbin	—a new drop-in bobbin in *front* of the needle
(DS. To)	
MCU Woman Sewing—Straight Stitching. (Jessie Clark—On Camera) from 2164	—and a new gear motor drive for better control, smoother running performance.
(DS. To)	
Three Machines . . With Roses . . As in Opening But *No Titles Super:* Made in America By Singer.	*Announcer:* (Over) Yes, now there are three! Three brilliant new Slant-Needle Sewing Machines made in America—by American Craftsmen—made for you by Singer!
Bring Up Name *Singer.*	

[fol. 5155] IN UNITED STATES DISTRICT COURT

GOVERNMENT'S EXHIBIT 208F

As Recorded Revise
5/7/58

Singer Slant-Needle Family
Announcement Film #2168-120

Video	Audio
A Single Rose Falls From Top of Frame . . . to Center Frame Left. This is Quickly Followed by Two More.	(Music Under)
Slant-O-Matic—with Super: *Slant-O-Matic* Dissolves Onto First Rose	Announcer: (Voice Over) Now there are *three!* *Woman:* (Voice Over) The Slant-O-Matic!
Slant-O-Matic Special—With Super: *Slant-O-Matic Special*— Dissolves Onto Second Rose	The new Slant-O-Matic Special!
Slant-Needle Straight Stitching Machine—with Super: Slant-Needle *Deluxe*— Dissolves Onto Third Rose Hold Three Machines	The new Slant-Needle Deluxe!
Machines Turn . . So That Stitching End Is Toward Camera. Camera Moves in for CU Needle of Slant-O-Matic, Side View Dissolve Front Elevation of Slant-O-Matic onto Side View . . Dissolve Out Side View. With Super: *Slant-O-Matic*	*Announcer:* (Over) Yes now there are *three! Three* brilliant sewing machines in the new Singer Slant Needle Family! Now you can have Singer exclusive Slant-Needle action— Singer superb Slant-Needle performance—for every kind of sewing! *Woman:* (Over) If you've been looking at sewing machines—you've certainly seen the Slant-O-Matic—with features you've never seen in a sewing machine before!
[fol. 5156] (DS. To)	
Hand Selecting Stitch from Stitch Chart . . . and Setting Dial	It lets you do thousands of decorative stitches—with just the turn of a dial!
(DS. To)	
MCU Woman Sewing on Slant-O-Matic	Does your everyday practical work too. If you want the world's finest fully-automatic . . . this is it! The incomparable Slant-O-Matic!
(DS. To)	
Rose—and to Beauty Shot Slant-O-Matic Special with Super: *Slant-O-Matic Special*	And now Singer brings you many of these same remarkable features at a lower price—in the new *Slant-O-Matic Special!*
(DS. To)	
CU. Needle Doing Straight Stitching	The Slant-O-Matic Special an automatic machine that gives you—smooth, trouble-free straight-stitching!
CU Woman's Hand Holding Zigzag Fashion Disc. She Slips It Into Machine.	and a wide variety of beautiful decorative stitches, too. These are Fashion Discs . . . that slip into your machine . . . .
(DS. To)	
CU Needle Sewing Decorative Stitch Pattern.	to let you do lovely decorative patterns like these—
(DS. To)	
CU Needle Overcasting Seam.	and handsome finishing stitches, too—

Video	Audio
(DS. To)	
CU Needle Sewing Button-Holes	for overcasting seams, making buttonholes
(DS. To)	
Rose—and to CU Beauty Shot Slant-Needle Straight Stitching Machine— with Super: *Slant-Needle* Deluxe!	And here's the brand new Slant-Needle Deluxe—that gives you famous Singer straight stitching—the finest in the world!
(DS. To)	
Needle Doing Stright Stitching.	
[fols. 5157-5162] (Cut To)	
CU Hand Opening Threading Chart.	Like the Slant-O-Matic . . . like the Slant-O-Matic Special the new Slant Needle Deluxe has a new built-in threading chart——
(Cut To)	
Woman's Hand Dropping In Bobbin.	—a new drop-in bobbin in *front* of the needle—
(DS. To)	
MCU Woman Sewing—Straight Stitching.	—and a new gear motor drive for better control, smoother running performance.
(DS. To)	
Three Machines . . With Roses . . As in Opening But *No Titles Super:* Made in America by Singer.	*Announcer:* (Over) Yes, now there are three! Three brilliant new Slant-Needle Sewing Machines made in America—by American Craftsmen—made for you by Singer! See them! Try them!—at your Singer Sewing Center now!
Bring Up Name *Singer*.	

[fol. 5163] IN UNITED STATES DISTRICT COURT

DEFENDANT'S EXHIBIT 1

March 25, 1954.

M. L. Waterman, Esq., Vice-President,
The Singer Manufacturing Company,
Singer Building, New York.

Dear Mr. Waterman:

Selective Pattern Cam Control Means for Use in Conjunction with a Zigzag Machine—Mr. Pfefferkorn.

We acknowledge the receipt of your letter of March 19, 1954, MLW: V3, together with its various enclosures.

As we understand the present situation, Mr. Pfefferkorn has offered to The Singer Manufacturing Company all rights in a device in the nature of a selective pattern cam control mechanism for use in conjunction with a family-type zigzag sewing machine. According to the copies of drawings enclosed with your letter, the cam control mechanism offered by Mr. Pfefferkorn has intially been applied to a Turissa zigzag family sewing machine which is provided with two manually controllable levers of which one is adapted for regulating the needle bight mechanism while the other is adapted to regulate the contral position of the needle. The pattern cam control mechanism as applied to the Turissa machine is connected with the bight regulator lever only so as automatically to shift such lever in a manner to produce various patterns of ornamental stitches.

[fol. 5164] The pertinent prior patented art relative to the subject mechanism is listed below:

U.S. No.	1,089,751,	Mar. 10, 1914,	Druckerman,
" "	1,512,738,	Oct. 21, 1924,	Aronson *et al.*,
" "	1,551,453,	Aug. 25, '25,	Aronson *et al.*,
" "	1,611,372,	Dec. 21, 1926,	Rader,
" "	2,623,487,	Dec. 30, 1952,	Marasco,
" "	2,653,557,	Sep. 29, 1953,	Casas-Robert *et al.*,
Br. "	19,184,	Sep. 12, 1908,	Magowan *et al.*

The broad idea of the subject mechanism is disclosed in the expired U.S. patent of Bader, No. 1,611,372, Dec. 21, 1926, which discloses a zigzag sewing machine having a

rotary pattern cam applied to the machine for the purpose of automatically manipulating a needle bight regulator lever which was primarily adapted to be manually manipulated.

The expired British patent of Magowan *et al.*, No. 19,184, dated Sep. 12, 1908, is also pertinent to the present issue for it discloses a zigzag sewing machine having two rotary cams and a manually controllable selector lever for connecting either of such cams with the bight regulator of the sewing machine whereby the operator may cause the machine to produce either of two different types of ornamental stitches. This British patent, however, does not disclose the idea of utilizing a single cam plate having one face thereof provided with a plurality of concentric cam track surfaces.

[fol. 5165] The unexpired U.S. patent of Marasco, No. 2,623,487, dated Dec. 30, 1952, discloses a Necchi zigzag machine as provided with the so-called "Wonder Wheel". This mechanism, like that of the subject device, comprises a rotary pattern cam which is connected with the bight control regulator lever of a zigzag machine for the purpose of automatically actuating such regulator lever to the end that various ornamental stitch patterns are automatically effected. Coupled with this Marasco mechanism is a variable speed driving mechanism in the form of a pair of complementary stepped pulleys which may be belted together in various combinations so as to drive the pattern cam at different rates of speed.

In view of the above, it is obvious that the subject mechanism is not broadly new. However, we believe that the cam plate with its concentric cam track surface design is specifically new as applied to a zigzag stitch sewing machine and is perhaps of a patentable nature. Also, it would appear that the specific form of variable speed drive mechanism is somewhat novel as applied to the rotary cam element of a zigzag stitch sewing machine. In view of this situation, we believe that specific patent protection might be had in most of the principal countries throughout the world. An investigation of our patent records indicates that as yet no patent has been issued covering the subject [fol. 5166] mechanism. Furthermore, from the correspondence accompanying your letter, we would surmise that only Swiss and/or German patent applications have been

filed for this mechanism. We do not, of course, know when such applications were filed, if ever [but it is possible that it is not yet too late to file patent applications for this mechanism in countries other than Switzerland and Germany.]

From the correspondence enclosed with your letter, it would appear that Dr. Müller is the owner of all rights in the subject device and that Müller is the son-in-law of Brütsch, which Brütsch, we presume, is connected with Brütsch & Co. of Zurich, Switzerland. If this is the case, we wonder what Dr. Müller's present connection is with Brütsch and whether Mr. Pfefferkorn is representing Müller, Brütsch & Co. or both parties. We might mention that the darning and embroidering machine discussed in the first paragraph of your letter is disclosed in U.S. patent No. 2,623,486, Dec. 30, 1952, which is assigned on its face to Brütsch & Co., Zurich, Switzerland. It is our understanding that Dr. Müller has recently offered the rights in and to this patent to Singer.

Summarizing, we believe that the present device comprises specific patentable subject matter only and that it infringes no Singer-owned patents, nor would it appear to interfere with any Singer developments of which we [fol. 5167] have knowledge. In our opinion, the patent rights offered will be of little value to us unless Singer is contemplating developing a machine utilizing a structure similar to that shown in the drawing.

We are returning the material enclosed with your letter.

Yours very truly, The Singer Manufacturing Company, ——, ——, Patent Department.

In triplicate.

Enclosures.

[fol. 5168] IN UNITED STATES DISTRICT COURT

DEFENDANT'S EXHIBIT 2

Received Patent Department, February 15, 1955, Answered February 23, 1955

The Singer Manufacturing Co.
Singer Building
149 Broadway
New York 6, N.Y.
Division of Research

In Replying Please Refer to MLW:V3

February 11, 1955.

J. G. Stanford, Esq.,
Elizabethport, New Jersey.

Dear Mr. Stanford:

Free Arm Zigzag Automatic Machine—Haas

In reviewing some correspondence relative to free arm zigzag machines, I came across some letters and reports from Mr. Gebhardt at Karlsruhe concerning a machine which Swiss engineer Haas has shown to our friends in Karlsruhe and, obviously, he was and, I believe, still is interested in offering it to Haid & Neu or Singer. Mr Gebhardt's latest letter and report indicates in its concluding paragraphs considerable question that the machine is one in which either Haid & Neu or Singer would be particularly interested. However, as I did not note that you have seen this correspondence previously, I am sending it in its entirety (the original of all the letters included) to you so that you may make any records that you may wish concerning the machine and its inventor. If you have any comments upon the structure of the machine or a desire to know more about it, please let me know, as it might be possible that more information could be obtained on our approaching visit to Germany and Switzerland.

Kindly return all of this correspondince when you are finished with it.

Very truly yours, M. L. Waterman, Vice President.

Enclosures

Letter in triplicate.

[fol. 5169] IN UNITED STATES DISTRICT COURT

DEFENDANT'S EXHIBIT 3

February 23, 1955.

M. L. Waterman, Esq., Vice-President,
The Singer Manufacturing Company,
Singer Building, New York.

Dear Mr. Waterman:

Free Arm Zigzag Automatic Machine—Haas

We acknowledge the receipt of your letter of February 11, 1955, MLW:V3, enclosing your correspondence relative to the subject zigzag machine. We have made copies of this correspondence for our file and thus we are returning the original correspondence to you.

Investigation through our files indicates that the subject Haas zigzag sewing machine is disclosed in a Swiss patent of Haas No. 300,900, August 25, 1953. The machine disclosed in this Swiss patent appears to correspond substantially with Mr. Gebhardt's written description.

From the Haas patent it would appear that the subject machine is particularly characterized by its single disk cam which is provided on each of its two opposite faces with a plurality of cam grooves which are adapted to receive a pair of cam followers. Apparently, these cam followers may be maneuvered to engage selective cam grooves thereby to produce various types of ornamental stitches. From this, it is to be appreciated that broadly speaking the Haas zigzag mechanism is similar to that [fol. 5170] which has been proposed for use with a modified form of the Class 306W machine, as well as for use

in the Experimental 282 machine. However, the claims of the Swiss Haas patent are concerned with the specific Haas structure and, thus, we do not believe that they would interfere with Singer's right to manufacture and sell the above noted modified Class 306W or Experimental 282 structures.

Yours very truly, The Singer Manufacturing Company, ——, ——, Patent Department.

In triplicate.

Enclosure—

Correspondence

[fol. 5171] In United States District Court

Defendant's Exhibit 4

Received M.L.W., December 2, 1954. Answered—

The Singer Manufacturing Company
Patent Department
Elizabethport F, New Jersey

December 2, 1954.

M. L. Waterman, Esq., Vice-President,
The Singer Manufacturing Company,
Singer Building, New York.

Dear Mr. Waterman:

Multiple-Cam Ornamental Stitch Sewing Machines

Recently in several foreign countries there have been published for opposition adversely-owned patent applications disclosing and claiming multiple-cam zigzag stitch sewing machines of the type adapted for family use. We feel that our competitors have on file many patent applications for multiple-cam machines and that the applications will soon be published in the major foreign countries. Indications show that at least some of these applications were filed one to two years prior to ours and, if granted,

will interfere with our world-wide distribution of sewing machines of the type like the newly designed Perla (modified Class 306W) and Johnson (Exp. 282) multiple-cam zigzag machines.

However, we may be able to prevent the granting of many of these patents with broad claims through opposition proceedings, in the event that we can prove that the claims are anticipated by prior patents, publications, or machines. Although we obtain copies of all U.S. sewing machine patents and, also, those of many foreign coun- [fol. 5172] tries, we cannot hope to acquire as a general procedure all of the publications containing disclosures of sewing machines or the evidence of the first commercial use of all of our competitors' sewing machines.

We believe that now is the time to begin to develop a defense, and that it would be highly desirable for us to acquire through our foreign friends copies of publications which disclose multiple-cam zigzag sewing machines. By publications we include all periodicals such as women's magazines and trade journals, as well as advertising brochures instruction books and adjuster's manuals. We are interested in such publications which bear an early publication date and particularly those published prior to the year 1954.

For example, a patent application of Husqvarna of Sweden was recently published in Portugal with broad claims which may be interpreted to cover a multiple-cam zigzag sewing machine. Since this Husqvarna application claims a priority date in Sweden of September 1, 1953, an Italian instruction book of the Vigorelli Model ZZ/A multiple-cam machine and bearing a publication date of 1952 or early 1953 would be of assistance to us in our efforts to prevent Husqvarna from securing broad claims in Portugal.

In view of the above, we think it would be well if our [fol. 5173] foreign friends would furnish us, at the earliest opportunity, with all publications, instruction books and advertising material which discloses multiple-cam zigzag stitch sewing machines wherein various cams may be selected for imparting different patterns of lateral zigzag movements to the needle. Obviously, a request for this information from your office would bring quicker results.

Since the opposition period in connection with the Husqvarna Portuguese patent application expires on Jan. 18, 1955, any information relative to the Husqvarna machine and to the Vigorelli ZZ/A instruction book would have to be in our hands before that date.

Yours very truly, The Singer Manufacturing Company, J. G. Stanford, Patent Department.

In triplicate.

[fol. 5174] IN UNITED STATES DISTRICT COURT

DEFENDANT'S EXHIBIT 5

December 16, 1954.

M. L. Waterman, Esq., Vice-President,
The Singer Manufacturing Company,
Singer Building, New York.

Dear Mr. Waterman:

Multi-Cam Family Zigzag Sewing Machine—Experimental 282 Machine—R. E. Johnson.

We have been requested to report the patent status of the Experimental 282 machine which forms the subject of a U. S. patent application which we filed November 24, 1954.

An investigation indicated that the present machine contains a plurality of patentable features of which all are disclosed and claimed in our above noted patent application and which are listed below as follows:

1. Rotary cam and cam selector mechanism.
2. Needle-bar and needle-bar gate mechanism.
3. Rotary hook.
4. Shiftable throat-plate.
5. Throat-plate thread-guard.
6. Presser-bar mechanism.
7. Needle clamp.

In time, this single patent application will be separated into several applications, each claiming a single one of the above listed features.

[fol. 5175] Attached to this report is a memorandum listing all of the features of this machine which are not new but which are covered by unexpired Singer U. S. patents.

As to the question of infringement of the present machine, our investigation has developed no unexpired adversely-owned patents, United States or foreign, containing claims which would be validly infringed by the present machine. Therefore, as far as issued patents are concerned, our Company is free from a patent standpoint to manufacture and market this machine in all of the principal countries of the world.

However, the most important feature of the present machine comprises a multi-cam needle-actuating mechanism provided with a cam selector means, and various comparable forms of this feature have been incorporated in several recently introduced competitors' machines and have been disclosed in patent applications published for opposition in at least two foreign countries. Since it would appear that each of the competitors' multi-cam and cam selector devices were developed prior to the conception date of the present Singer construction, there is a possibility that one of our competitors may obtain patent claims in one or more countries including the United States, which claims may be [fol. 5176] infringed by the present Singer machine.

More specifically, to our knowledge the first multicam and cam selector mechanism employed within a sewing machine housing was incorporated in the Italian-made Vigorelli Model ZZ A zigzag stitch sewing machine which formed the subject of our report of October 28, 1953 (53 P.S. 474). The Vigorelli cam mechanism includes a removable unitary nest of stacked cam elements of which a single cam may be selected by the operator for the purpose of effecting a predetermined pattern of ornamental zigzag stitches. To our knowledge, this machine was first introduced into the United States in September 1953 and apparently it was publicly displayed in Italy as early as 1952.

The Japanese-made Brother zigzag sewing machine, type A23-B-1, has recently appeared in the United States and this machine is provided within the hollow portion of its bracket-arm with a nest of seven dissimilar cams carried upon a vertically-disposed stub shaft which may be clutched

to and declutched from the main driving shaft of the machine by a manually controlled clutch. Cooperating with this nest of cams is a single cam follower arm which controls the amplitude of needle vibration and which is pro-
[fol. 5177] vided with means whereby the operator may shift the arm back and forth in a vertical direction so that the latter may be made to engage any one of the cams or any pair of adjacently disposed cams to the end that the machine can be made to produce automatically any one of a plurality of ornamental stitch patterns.

The recently published Brazilian patent application No. 67,354, dated May 12, 1953, and filed in the name of Brütsch & Co., discloses and claims a zigzag type of sewing machine provided with two rotary pattern cams and a cam follower which may be selectively engaged with either one of the two cams for the purpose of imparting a selective one of two ornamental stitch patterns to the laterally shiftable needle. The claims of this patent application would appear to read upon the present machine. However, we believe that these claims are unduly broad in scope in view of the expired Magowan et al. British patient No. 19,184, dated September 12, 1908. In view of this situation, we have lodged an opposition against this Brazilian application and we are hopeful that we may be able to restrict these claims to a degree that they will not dominate the present machine in Brazil. We presume that Brütsch & Co., the
[fol. 5178] owner of this Brazilian application, has filed corresponding foreign applications in other countries including the United States.

We have recently learned that the Swedish firm of Husqvarna on June 18, 1954 filed a patent application, No. 31378, in Portugal and that this application covers a zigzag type sewing machine which employs a plurality of cams of which each may be selectively chosen for shifting the needle laterally of the direction of feed. It appears that this Portuguese patent application corresponds to a prior Husqvarna application filed in Sweden on the 1st day of September, 1953, under No. 7838. Before taking any action to oppose those several Husqvarna applications, we are endeavoring to gain more specific information concerning the Husqvarna machine.

From the above, it will be appreciated that the patent

situation concerning multi-cam operated zigzag machines is nebulous because of the recent accelerated activity of our competitors in this field all over the world. Because pending patent applications of our competitors are not open to inspection until they are published for opposition, it is impossible to predict who, if anyone, will acquire dominating patents in this field.

[fol. 5179] The manufacture and sale of the multi-cam constructions devised by Singer may ultimately result in the infringement of claims of patents which may issue to one or more of our competitors. However, if the Company wishes to produce and market machines incorporating the stacked cam arrangement we would recommend that it proceed to do so and that each question of infringement of a competitor's patent be dealt with when and if it arises.

We shall keep close watch for further developments in this field and take all possible steps to keep it open for Singer.

Yours very truly, The Singer Manufacturing Company, ——, ——, Patent Department.

In triplicate.

Enclosure—

Memorandum

CC:Mr.A.W.Reiner.

[fol. 5180] Additional art:

U.S. No.	386,252,	Jul. 17, 1888,	Leilich,
" "	1,573,138,	Feb. 16, 1926,	Brase,
" "	1,611,372,	Dec. 21, 1926,	Rader,
" "	2,202,609,	May 28, 1940,	Sturzlinger,
" "	2,308,465,	Jan. 12, 1943,	Hale,
" "	2,377,293,	May 29, 1945,	Reece,
" "	2,682,845,	Jul. 6, 1954,	Casas Robert *et al.*,
" "	2,684,649,	Jul. 27, 1954,	Scarpa,
Austrian "	155,404,	Aug. 15, 1938,	Singer N. A. G.,
British "	138,120,	Jan. 24, 1920,	Rooker,
British "	266,301,	Jan. 14, 1927,	Ezbelent *et al.*,
British "	427,531,	Nov. 9, 1934,	Schweiger,
French "	573,003,	Oct. 18, 1923,	Brase,
German "	694,339,	Dec. 22, 1938,	Hermann Kohler Akt.-Ges.,
Swiss "	275,136,	Aug. 5, 1949,	Fritz Gegauf Akt.-Ges.,
Japanese "	13,119,	Oct. 23, 1907,	
Australian Appl.	18,160,	May 11, 1953,	Brütsch & Co.,
Japanese "	4,585,	Apr. 10, 1950,	Kokichi Matsuda,
Japanese U.M. Appl.	1,669,	Feb. 5, 1951,	K. Matsuda,
" " "	1,363,	Jan. 31, 1951,	K. Matsuda,
" " "	1,670,	Feb. 5, 1951,	K. Matsuda,
" " "	11,919,	Sep. 13, 1951,	Bunsaku Taketomi.

[fol. 5181] Memorandum--CAW-Z—December 15, 1954

Singer-owned U.S. patents and patent application covering ~~Experimental~~ Machine 282.

No. 2,131,005,	Sep. 20, 1938,	Chason,	Thread Tension,
" 2,394,510,	Feb. 5, 1946,	Clayton,	Inclined Needle Bar,
" 2,450,837,	Oct. 5, 1948,	Marsac,	Dobbin Winder,
" 2,444,826,	Jul. 6, 1948,	Happe,	Motor Brush Assembly,
" 2,448,500,	Aug. 31, 1948,	Turner,	Motor Bearing,
" 2,478,551,	Aug. 9, 1949,	Turner,	Motor Yoke Centering,
" 2,617,375,	Nov. 11, 1952,	Peets,	Motor Drive,
" 2,677,042,	Apr. 27, 1954,	Peets *et al.*,	Lighting Device,
Appl. No. 230,044,	Jun. 5, 1951,	Peets *et al.*,	Two Pin Receptacle and Motor Plate.

[fol. 5182] In United States District Court

Defendant's Exhibit 6

Referred to: Mr. Evans

For: Please note that we have marked this letter confidential as we do not want the competition to know that we are so much interested in obtaining this information about their machines.

M. L. Waterman.

[fol. 5183] The Singer Manufacturing Co.
Singer Building
149 Broadway
New York 6, N. Y.

In replying please refer to RMM:V9

December 20th, 1954.

Confidential

W. P. Evans, Esq.
Milan, Italy

Dear Mr. Evans:

Multiple-Cam Ornamental Stitch Sewing Machines

Recently in several foreign countries there have been published for opposition adversely owned patent applications disclosing and claiming *multiple cam* zigzag stitch sewing machines of the type adapted for family use. We feel that our competitors have on file many patent applications for *multiple cam* machines, and that the applications will soon be published in the major foreign countries. Indications show that at least some of these applications were filed several years ago.

We may be able to prevent the granting of many of these patents with broad claims through opposition proceedings in the event that we can prove that the claims are anticipated by *prior patents*, publications or machines.

In view of the foregoing it would be highly desirable for us to acquire copies of publications which disclose *multiple-cam* zigzag sewing machines. By publications we mean all periodicals such as women's magazines and trade journals as well as advertising brochures, instruction books and adjuster's manuals. We are interested in such publications which bear an early publication date, and particularly those published prior to the year 1954 going back as far as 1949.

For example, a patent application of Husqvarna of Sweden was recently published in Portugal with broad claims which may be interpreted to cover a *multiple cam*

zigzag sewing machine. Since this Husqvarna application claims a priority date in Sweden of September 1, 1953, an Italian instruction book of the Vigorelli Model ZZ/A *multiple cam* machine and bearing a publication date of 1952 or early 1953 would be of assistance to us in our efforts to prevent Husqvarna from securing broad claims in Portugal. Since the opposition period in connection with the Husqvarna Portuguese patent application expires on January 18, 1955 any information relative to the Virorelli ZZ/A instruction book would have to be in our hands well before that date.

[fol. 5184] It would be appreciated if you could send us a list of the publications mentioned above, which we have requested prior to their actual dispatch in order that we can eliminate possible duplication which may be made available to us from other sources.

Yours very truly, M. L. Waterman, Vice President.

[fol. 5185] IN UNITED STATES DISTRICT COURT

DEFENDANT'S EXHIBIT 7

Referred to: Mr. Adamson

For: Please note that we have marked this letter to you as confidential.

M. L. Waterman.

[fol. 5186] The Singer Manufacturing Co.
Singer Building
149 Broadway
New York 6, N. Y.

Confidential

In replying please refer to RMM:V9

December 20th, 1954.

L. Adamson, Esq.
Frankfurt, Germany

Dear Mr. Adamson:

Multiple-Cam Ornamental Stitch Sewing Machines

Recently in several foreign countries there have been published for opposition adversely owned patent applications disclosing and claiming *multiple cam* zigzag stitch sewing machines of the type adapted for family use. We feel that our competitors have on file many patent applications for *multiple cam* machines, and that the applications will soon be published in the major foreign countries. Indications show that at least some of these applications were filed several years ago.

We may be able to prevent the granting of many of these patents with broad claims through opposition proceedings in the event that we can prove that the claims are anticipated by prior patents, publications or machines.

In view of the foregoing it would be highly desirable for us to acquire copies of publications which disclose *multiple cam* zigzag sewing machines. By publications we mean all periodicals such as women's magazines and trade journals as well as advertising brochures, instruction books and adjuster's manuals. We are interested in such publications which bear an early publication date, and particularly those published prior to the year 1954 going back as far as 1949.

In this connection we would appreciate your forwarding

to us the following copies of the German edition of DNZ Magazine which appeared to be missing from our files.

1949	1950	1951	1952
All Copies	January	June	January
	February	November	February
	March		

It would be appreciated if you could send us a list of the publications mentioned above, which we have requested, [fol. 5187] prior to their actual dispatch in order that we can eliminate possible duplication of items which may be made available to us from other sources. This of course does not apply with respect to the copies of DNZ Magazine.

As there is great urgency attached to this request we would appreciate it if you can give it your prompt attention.

Yours very truly, M. L. Waterman, Vice President.

[fol. 5188] In United States District Court

Defendant's Exhibit 8

Confidential

January 3rd, 1955.

M. L. Waterman, Esq.,
Vice President,
Singer Building,
149 Broadway,
New York 6.

Dear Mr. Waterman:

Multiple-Cam Ornamental Stitch Sewing Machines

This is to acknowledge the receipt of your letter of December 20th contents of which have been duly noted.

With regard to copies of publications such as women's magazines and trade journals as well as advertising brochures, instruction books and adjuster's manuals I beg to advise you as follows.

We have been perusing all German women's magazines that matter regularly for the last 2 to 3 years but have never come across any articles which have gone to any extent into technical details of zigzag sewing machines. If any publications disclosing multiple cam zigzag sewing machines had appeared in such magazines we should have noticed them. In fact, editors of such magazines are in the habit of submitting to us the issues of their papers containing any discussions of sewing machines especially because they like to couple the opportunity of directing our attention to such publications with invitations to us to advertise in their papers.

Regarding trade journals there exist only two worth mentioning which treat of both family and industrial sewing machines. Firstly the

Deutsche Nähmaschinen Zeitung (D N Z)
with its German and Export editions

and secondly the

Deutsche Mechanikerzeitung
Zweirad & Nähmaschine (Z + N).

The DNZ Magazine is known to you both in its German and Export editions.

[fol. 5189] In accordance with your request we sent you last week, by air mail, as printed matter, the 13 copies of this magazine which you advised were missing from your files. For your guidance I may mention that the publication of the DNZ was resumed after the War first in July 1949.

The Deutsche Mechanikerzeitung is a trade paper for mechanics started after the War which at first was published chiefly for bicycle, office machine, etc. mechanics and to a lesser degree also for sewing machine mechanics. It has gradually increased the share of sewing machines in its publications. However, it has not become a specific sewing machine trade paper like the DNZ.

In order to give you an idea of this trade paper and its contents we are forwarding to you by sea mail 19 duplicate copies of this journal we have available of the copies issued in 1949 to 1951. Should you care to receive additional

copies of this trade journal, please advise and we shall send you the more recent publications as far as we shall be able to procure them yet.

We do not remember having seen any descriptions of multiple cam zigzag sewing machines in either of these trade papers before the first machines of this kind were actually put on the market in this country which was at the beginning of this year, with exception of the Elna Supermatic which was advertised for sale in June 1953 and the Necchi-Supernova which was shown in Germany for the first time about the same time.

As to advertising brochures we have none which were not sent or handed to you already at the occasion of your visit here in October of this year.

We are trying to procure additional printed matter on multiple cam zigzag sewing machines as well as instruction books and adjuster's manuals, although it is as a rule very difficult to obtain such manuals and instruction books.

I shall write you again as soon as additional material will be available, which, I hope, will be within a short time.

Yours very truly, [Copy Illegible].

[fols. 5190-5193] IN UNITED STATES DISTRICT COURT

DEFENDANT'S EXHIBIT 9

Confidential

CFB.og(Comm.)

Milan 12th Jan. 1955.

M.L. Waterman, Esq.,
149 Broadway
New York, 6

Dear Mr. Waterman:

Multiple-Cam Ornamental Stitch Sewing Machines

We have read with careful attention your letter of December 20th (RMM:V9) which was unfortunately held up in the post over the Christmas holiday and did not reach us until last week.

It is not easy to obtain the references you seek for the period prior to middle of 1953 as the Vigorelli ZZ A multiple-cam machine was only exhibited for the first time at the Milan Fair in April that year. While we are still continuing our search, we are enclosing a copy of the press release issued by ANSA—the official Italian news agency—on March 21st reporting the comments of the Minister of Industry on the new Vigorelli machines and mentioning specifically "the group of cams incorporated in the machine". We are enclosing a translation of it.

Please also find attached a coloured folder of the Vigorelli multi-cam machine, dated June 1953. Unfortunately there does not appear to be any organized reference library with classified press reports and our enquiries are conducted on a hit-and-miss basis. Meantime we are sending you the enclosed so as to reach you in time to be of use.

Yours very truly, ——, ——, Campagnia Singer, per Macchine da Cucire.

Encls

[fol. 5194] IN UNITED STATES DISTRICT COURT

DEFENDANT'S EXHIBIT 11

June 16, 1955.

Compagnia Singer per Macchine da Cucire,
Palazzo Singer,
Via Dante 18,
Milan, Italy.

Attention: Dr. S. Lando

Gentlemen:

Italian Patent Law

Vigorelli owns Italian patent No. 497,557 filed in Italy on January 28, 1953 and claiming the broad idea of a zigzag type sewing machine having a plurality of rotary cams and means for selectively connecting any one of such cams to the needle-bar so as to produce a predetermined pattern of zigzag stitching. Such a claim would apparently be in-

fringed in Italy by a zigzag type machine which Singer is contemplating making.

Singer has recently acquired the ownership of an Italian patent of Carl Harris No. 509,535 which was filed in Italy on June 5, 1953 claiming a Canadian priority date of June 6, 1952, which priority date is some six months previous to the filing date of the Vigorelli Italian patent No. 497,557. Like the Vigorelli patent the Harris patent discloses a zigzag type sewing machine having a plurality of rotary cams and means for selectivity connecting any one of such cams to the needle-bar thereby to produce a predetermined pat- [fol. 5195] tern of zigzag stitching. Thus, it would appear that Harris was the prior inventor of the common subject matter disclosed in the Italian Harris and Vigorelli patents.

Unfortunately, however, the Harris patent does not specifically claim the multi-cam and cam selector means disclosed in the Harris and Vigorelli patents and, therefore, the question arises as to whether broadened claims of this scope can now be inserted in the Harris patent particularly in view of the fact that Vigorelli since 1953 has been manufacturing and selling in Italy its ZZ/A zigzag machine of the type disclosed in the above noted Vigorelli patent.

We appreciate, of course, that it may be impossible to place such broadened claims in the Italian Harris patent or, in the alternative, that if broadened claims could be placed in the Harris Italian patent they would not carry the Canadian priority date of June 6, 1952 but rather the date of filing such broadened claims. We also raise the question as to whether the Harris Italian multi-cam disclosure if unsupported by any claims relating to such structure could support a Singer allegation that Harris was, under Italian law, the first inventor of the multi-cam idea which is common to the Italian Harris and Vigorelli patents. In other words, on the assumption that it would be [fol. 5196] impossible to alter the present Harris Italian claims, the question is could the Italian Harris patent still be interpreted so as to anticipate and/or be infringed by the Vigorelli multi-cam structure as disclosed in Italian patent No. 497,557.

By way of background information, it might be pertinent to mention that the Italian Harris patent receives its priority date from a corresponding Canadian patent application filed on June 6, 1952, which has not as yet matured into a patent and which, as originally filed, did not claim the subject matter common to the Italian Harris and Vigorelli patents. However, we are at the present time endeavoring to broaden the claims of the Canadian application.

This matter is of vital importance and thus we would appreciate receiving an opinion in connection with our questions at the earliest possible opportunity. If, in your opinion, we could take any effective steps to improve the value of our Italian Harris patent, we would appreciate your advising us accordingly, if possible, by cablegram. However, we must mention that we are desirious of keeping secret the fact that Singer has any interest or ownership in the Italian Harris patent.

Yours very truly, The Singer Manufacturing Company, ——, ——, Patent Department.

CC: Mr. M. L. Waterman

[fol. 5197] IN UNITED STATES DISTRICT COURT

DEFENDANT'S EXHIBIT 12

Received Patent Department, August 31, 1955, Answered—

Personal

August 16, 1955.

Mr. W. P. Evans,
18 Via Dante,
Milan, Italy.

Dear Mr. Evans:

In connection with the developments which we have under way in the matter of zigzag machines, we find that there probably is some conflict between patent rights which we

have, or which we expect to obtain, and rather similar patents that are being obtained by Vigorelli. I believe that this situation was the subject of some discussion between Mr. Stanford and Dr. Lando when Mr. Stanford was in Milan in April of this year. Dr. Lado was then very helpful to Mr. Stanford in obtaining copies of some patents that had been issued by the Italian Patent Office.

It is altogether probable that we may become involved in litigation with Vigorelli, not only in Italy but also in some other countries, unless by talking matters over with them we can find some basis of agreement which would enable us to be free from claims by them, and perhaps accord similar immunity to them with respect to claims by us based on our own patent rights. That is the situation as we see it from here and we feel that if any such discussion is to take place, it would be better to initiate it at an early date rather than wait until some of the developments now under way are brought out on the market.

The question is how to initiate such a discussion, and it is that which has caused me to write to you. I am quite sure that you have a certain acquaintance with the Vigorelli [fol. 5198] management and I would be much obliged if you would let me know exactly what this is and whether you feel that your contact with them is of such a character that it would facilitate the opening of discussion. Does Dr. Lando have any such acquaintance? If he does, it may be that Dr. Lando would be the one who could best open the matter with Vigorelli. I would be very glad to receive any information that you could send me along this line. You will understand that my inquiry is purely exploratory and that I would not wish to have either you or Dr. Lando say anything to Vigorelli until after we have received the benefit of your reply to this letter and have considered further the question of what course it might be wise for us to take. I suppose that if we were to open any such discussions we would wish to have the assistance of the attorneys in Italy who have been looking into these patent questions. I do not know whether I can get Mr. Stanford to return to Italy just at this time for the purpose of taking part in such negotiations, but I do know that he feels that it is very important that we make progress without wasting too much

time. Please give me the benefit of your information and your suggestions as to how we might best initiate and conduct such a negotiation.

Yours very truly, M. C. Lightner.

[fol. 5199] IN UNITED STATES DISTRICT COURT

DEFENDANT'S EXHIBIT 13

Compagnia Singer Per Macchine Da Cucire
Societa Italiana Per Azioni
Sede Milano—Stabilimenti Monza
Capitale Sociale Lit. 1,500,000,000

Milan 30th August, 1955.

M. C. Lightner, Esq.,
149 Broadway
New York, 6

Dear Mr. Lightner:

I have read with great interest and attention your letter of August 16th on the subject of the patent situation vis-a-vis the Vigorelli Company.

Our relations with this competitor are friendly enough though our contacts are few and far between. Dr. Lando had some dealings with Mr. Vigorelli and his assistants during the war years, but has not had occasion to see much of them since, nor have my meetings and Mr. Baumann's during recent years been more than occasional ones.

Your enquiry has been discussed at length with Dr. Lando who, as you know, is something of an expert on patent matters. His first reactions were to proceed with the greatest caution in making the first move in such a delicate matter, especially as several of our competitors may be feeling none too sure of their respective positions.

However, should such an encounter be desired we would prefer the occasion to appear a fortuitous one, though presumably some mention would have to be made of new developments in the Company's automatic machines in order to justify the suggestion of a further "get together".

Providing Vigorelli's reactions were friendly and favourable a regular meeting would be arranged for a later date, at which we feel that the presence of a technical expert from New York would be quite necessary. Such a meeting would [fols. 5200-5201] be arranged so as to allow Mr. Stanford time to get here.

We understand quite well the purpose you wish to achieve in arriving at a basis of agreement with Vigorelli and if you should decide that this is the course to be followed we shall do our best to accomplish the matter successfully.

Yours very truly, W. P. Evans.

[fol. 5202] IN UNITED STATES DISTRICT COURT

DEFENDANT'S EXHIBIT 15

Received Patent Department October 25, 1955, Answered—

Compagnia Singer Per Macchine Da Cucire
Società Italiana Per Azioni
Sede Milano—Stabilimenti Monza
Capitale Sociale Lit. 1,500,000,000

Milan 20th October, 1955.

M. L. Waterman, Esq.,
149 Broadway
New York, 6

Dear Mr. Waterman:

In accordance with the request contained in your letter of Oct. 14th (31-028), we have had a further meeting with Mr. Vigorelli at his factory in Pavia, as a result of which we cabled you today as follows:

"Your letter October 14th Gegauf Bernina patent 501172 deposited Switzerland May 31st 1952 and Italy May 30th 1953 stop Granted in Italy November 23d 1954 stop Stated to have been granted also in Germany and U.S.A. stop Expect to send you within fortnight detail of Bernina claims stop Dates you

suggest coincide with succession public holidays and Vigorelli now proposes meeting on November 16 or 17."

Dr. Lando obtained an appointment with Mr. Vigorelli on his return to town yesterday and during the course of this meeting was able to secure the details of the Bernina Gegauf patent which is the subject of current negotiations between Vigorelli and the Bernina Company.

As explained in the cable, there is a number of public holidays at the beginning of November, after which Mr. Vigorelli expects to have to go to Rome for an important engagement, though he does not know the exact date. Because of this he asked us to accept the 16th or 17th for our first meeting.

There is little to add to the information already sent in the cable except that you may be interested to know that in Spain the ALFA Company has commenced the manufacture of a multiple-cam machine along similar lines to those patented by Vigorelli and that Vigorelli has started opposition proceedings.

[fols. 5203-5204] The Vigorelli patent has already been granted in Italy, Spain, Argentine and other minor territories. It has been applied for, but not yet granted, in U.S.A., U.K., France, Brazil, etc.

Yours very truly, ——, —, Compagnia Singer, per Macchine da Cucire.

cc: Mr. M.C. Lightner, c/o Paris

[fol. 5205] IN UNITED STATES DISTRICT COURT

DEFENDANT'S EXHIBIT 17

Compagnia Singer Per Macchine Da Cucire
Societa Italiana Per Azioni
Sede Milano—Stabilimenti Monza
Capitale Sociale Lit. 1,500,000,000

Milan 24th October, 1955.

M. L. Waterman, Esq.,
149 Broadway
New York, 6

Dear Mr. Waterman:

Bernina Patent

This is to confirm the following exchange of cables:
Yours of Oct. 21st:

> "Re our cable October 20 your reply 21st stop Imperative we have copy of Italian Bernina patent 501172 early next week as needed for study prior our departure stop Due to conference date 16th or 17th now planning to leave here November 2nd proceeding to Germany first then Italy"

Ours of October 24th:

> "Your cable 21st Bernina Patent mailed today registered airmal."

We should explain that Bernina's Italian patent has not yet been printed and a transcription could only be obtained through the good offices of our patent agents. In view of the great urgency, however, the Rome office of Barzano & Zanardo worked over the week-end copying the text and making photographs of the drawings and we are accordingly able to send the required copy in Italian herewith. We are going ahead with the translation which we expect to be able to send in about 3/4 days.

We have also included with patent 501172 a copy of an earlier Bernina patent, No. 444104 of 1949, in case this should have some bearing on your investigations.

Yours very truly, W. P. Evans, Compagnia Singer, per Macchine da Cucire

cc: Mr. M. C. Lightner, c/o Milan

[fol. 5206] IN UNITED STATES DISTRICT COURT

DEFENDANT'S EXHIBIT 18

October 25, 1955.
Patent Department.
Correspondence Dept.

Telegram

Please send the following telegram:

Mrs. E. L. Snider
930 Warner Building
Washington 4, D. C.

Please conduct patent assignment search Fritz Gegauf and/or Bernina Nahmaschinenfabrik from 1950 to date.

Patent Department, The Singer Manufacturing Company, ——, ——, Patent Department.

[fol. 5207] IN UNITED STATES DISTRICT COURT

DEFENDANT'S EXHIBIT 19

air mail

October 25, 1955.

Mr. James M. McKinnon,
Singer Sewing Machine Company,
No. 6, 1-Chome, Shinkawa, Chuo-Ku,
C. P. O. Box 813,
Tokyo, Japan.

Dear Mr. McKinnon:

Possible Printed Disclosures in Japan of Multi-Cam Ornamental Stitch Sewing Machines

We would like to invalidate several adversely-owned European patents each relating to zigzag stitch sewing machines and broadly claiming the idea of providing such a machine with a plurality of differently shaped rotary cams and means for selectively connecting any one of the cams with the needle-bar thereby to produce any one of a plurality of different patterns of ornamental stitches. These patents could be invalidated, or at least severly limited in scope, if we could locate one or more printed disclosures illustrating and describing such a machine, which disclosures were published in any country prior to May 31, 1952.

Our investigations have led us to believe that an ornamental stitch machine of this general type is disclosed in each of the ten Japanese patent and utility model applications, of which copies are enclosed. With the exception of [fol. 5208] Japanese patent application No. 13343 of 1953, you will note that each of these applications was filed in Japan prior to the critical date of May 31, 1952. However, none of these ten applications was published until after this critical date. Thus, it would appear that these applications in and of themselves would not assist us in invalidating the subject European patents. However, it occurs to us that possibly the subject matter of one of these ten patent applications might have been given publicity in

Japan prior to the critical date of May 31, 1952. In other words, one of these Japanese machines may have been illustrated and described, prior to May 31, 1952, in Japan in a newspaper, trade publication, or advertising brochure, which publication would assist us materially in invalidating the subject European patents.

We would appreciate it if you could possibly locate such a printed disclosure. We realize that such an investigation on your part might be extremely difficult. However, since Singer wishes to manufacture and market machines of the type claimed in the subject European patents, you will realize the importance to us of being able to invalidate or severely limit the claims of these adversely-owned patents. [fol. 5209] Referring to the ten enclosed patent applications, it is interesting to note that six of them were filed in the name of Kokichi Matsuda, three of them in the name of Bunsaku Taketomi and one in the name of Masataka Nakata. We presume that the identities of these patentees could be discovered without too much difficulty and that thereafter it could be determined whether or not these patentees or their employers have ever manufactured, sold or advertised machines of the type disclosed in the above noted ten Japanese applications. Even though such machines may have never been produced in quantity in Japan, it may be possible that one or two of such machines were made up and demonstrated at an industrial fair or at one of the Japanese universities. Such an exhibit might well have been covered by the newspapers and, furthermore, the machine may have been illustrated in printed brochures.

Any assistance which you may extend to us in connection with the above would be greatly appreciated.

Yours very truly, The Singer Manufacturing Company, ——, ——, Patent Department.

Enclosures—

Photostats of 10 Japanese appls. w/a list.

CC:Mr.M.L.Waterman, Mr.A.K.Aurell

[fol. 5210] Japanese Patent Applications and Utility Model Applications

Application No.	820,	Jan. 22, 1951,	Kokichi Matsuda
" "	3394,	Mar. 5, 1951,	Bunsaku Taketomi
" "	4585,	Apr. 10, 1950,	Kokichi Matsuda
" "	11318,	Aug. 31, 1951,	Kokichi Matsuda
" "	13343,	Jul. 26, 1953,	Bunsaku Taketomi
" "	11919,	Sep. 13, 1951,	Bunsaku Taketomi
Utility Model App. "	2834,	Feb. 11, 1952,	Masataka Nakata
" " " "	1362,	Jan. 31, 1951,	Kokichi Matsuda
" " " "	1669,	Feb. 5, 1951,	Kokichi Matsuda
" " " "	1670,	Feb. 5, 1951,	Kokichi Matsuda

[fol. 5211] In United States District Court

Defendant's Exhibit 20

Received Patent Department, Dec. 19, 1955, Ans'd—

Translation

Compagnia Singer Per Macchine Da Cucire
General Management, Milan, Dante 18

Milan 19th November, 1955.

Confidential

Registered

Messrs Arnaldo Vigorelli S.p.A.

Pavia

To the attention of Mr. A. Vigorelli

This is to inform you that, following the agreement signed on November 17th between the parties, we have today deposited in the offices of Messrs Balzano' & Zanardo, our Patent Agents, copies of the patent applications by Johnson and by Perla.

We take the opportunity to draw your attention to the fact that the patent application by Perla, erroneously indicated in the agreement as bearing the number 386.684, actually bears the number 473.855. The latter is therefore to be considered to substitute the wrong number.

Kindly acknowledge receipt of this letter and with best regards,

Yours very truly, ——, ——, Compagnia Singer, per Macchine da Cucire. Central Manager, signed Dr. S. Lando.

[fol. 5212] IN UNITED STATES DISTRICT COURT

DEFENDANT'S EXHIBIT 21

Received Patent Department, November 29, 1955, no answer.

Singer Sewing Machine Company
No. 6, 1-Chome, Shinkawa, Chuo-Ku
Tokyo, Japan
C. P. O. Box 813

November 26, 1955.

Mr. J. G. Stanford
The Singer Manufacturing Company
Patent Department
Elizabethport F, N. J.

Dear M. Stanford:

Possible Printed Disclosures in Japan of Multi-Cam Ornamental Stitch Sewing Machines

We acknowledge receipt of your letter of October 25th on the above subject, with enclosures.

Our investigations so far have disclosed that Kokichi Matsuda is president of San Shin Mishin Kabushiki Kaisha (San Shin Sewing Machine Co., Ltd.) of 1579 Inatzuke Shimashita-machi, Kita-ku, Tokyo; Masataka Nakata is president of San Shin Zig-Zag Mishin Hanbai Kabushiki

Kaisha (San Shin Zig-Zag Sewing Machine Sales Co., Ltd.), same address, with the Nagoya branch at 24, 2-chome, Oike-chō, Naka-ku, Nagoya, where Nakata is located; and Bunsaku Taketomi operates a metal working shop in Nagoya. Since San Shin have been making zigzag machines from before May 31, 1952, we are arranging to obtain catalogs and/or specifications of their machines from the Ministry of International Trade & Industry, and hope to soon have more definite information lined up, when we will promptly advise you.

Yours very truly, Singer Sewing Machine Company,
J. N. McKinnon, General Manager.

S

cc: Mr. A. K. Aurell, Mr. M. L. Waterman.

[fol. 5213] IN UNITED STATES DISTRICT COURT

DEFENDANT'S EXHIBIT 22

Received Patent Department, January 4, 1956, Answered January 5, 1956

Singer Sewing Machine Company
No. 6, 1-Chome, Shinkawa, Chuo-Ku
Tokyo, Japan
C. P. O. Box 813

December 30, 1955.

Mr. J. G. Stanford
The Singer Manufacturing Company
Patent Department
Elizabethport F, N. J.

Dear Mr. Stanford:

Possible Printed Disclosures in Japan of Multi-Cam Ornamental Stitch Sewing Machines

Further to our letter J9-1043 of November 26th, we are having considerable difficulty in accomplishing anything on this. Up to the present we find:

1. No catalogs or specifications are available from MITI on San Shin Zig-Zag machines produced prior to May 31, 1952.
2. Mr. Nakata, President of the San Shin Sales Company, was a prewar Supervisor of Singer here in Japan and well known to Mr. Shibawaka. He informs Mr. Shibawaka all their advertising materials, blue prints, records, etc., were lost when their plant burned down in October 1954.
   They are looking for old advertising material.
3. Mr. Ichinose informed us that some 5 years ago San Shin had manufactured a Zig-Zag machine which was found to infringe certain Necchi patents and withdrawn by San Shin—never marketed.
4. We have still been unsuccessful in locating Mr. Taketomi, the individual who holds three of the applications you referred to us.
5. We are now searching through as many Japanese sewing machine publications as we can find dated prior to or around May 1952 to see if we can gain some information from them.
6. We are now checking at the Industrial Research Bureau of MITI to learn if they have any information or sample Zig-Zag equipment.
7. We have been unable to get the exact details, but we learn through Pine contacts that in February 1951 San Shin obtained an export permit to ship 126 Zig-Zag machines of the Necchi type to the United States. Also we learn that San Shin applied in December 1950, possibly Mr. Matsuda, for a patent on a Zig-Zag machine. The Patent Examiner then in charge was a Mr. Matsuki. He is now a Patent Judge and we understand that he questioned the application at the time of its examination. This Mr. Matsuki, according to our Patent Attorney Mr. Matsuno, has handled the majority of Singer applications. When Government offices open in the new year we shall see what can be learned from Mr. Matsuki.

[fol. 5214] We are sorry at the present this is not a very encouraging report, but we feel eventually our efforts should uncover something which will be of assistance to you in resolving this matter.

Yours very truly, Singer Sewing Machine Company,

James M. McKinnon, General Manager.

JMM:s

cc: Mr. A. K. Aurell, Mr. M. L. Waterman.

[fol. 5215] IN UNITED STATES DISTRICT COURT

DEFENDANT'S EXHIBIT 23

Received Patent Department, January 24, 1956, Answered January 26, 1956

Singer Sewing Machine Company

No. 6, 1-Chome, Shinkawa, Chuo-Ku

Tokyo, Japan

C. P. O. Box 813

January 20, 1956.

Mr. J. G. Stanford
The Singer Manufacturing Company
Patent Department
Elizabethport F, N. J.

Dear Mr. Stanford:

Possible Printed Disclosures in Japan of Multi-Cam Ornamental Stitch Sewing Machine

Further to our letter J9-1140 of December 30, 1955, we can report Mr. O. Nishimura, who is one of our General Distributors here in Tokyo, is closely associated with the

San Shin Zig-Zag Sewing Machine Co. and he has given us the following details regarding the development of this concern:

Mr. Matsuda, the president and the one holding six of the patents referred to in your letter, started to make arms and beds for family sewing machines in his machine shop from November of 1947. The first advertisement was made in the "Japan Sewing Machine Times" of December 15, 1947. Mr. Nishimura invested something in this concern and up until September 1951 San Shin existed only on manufacture of regular arms and beds. However, in October of 1951 a U. S. buyer asked the San Shin Co. to copy a zigzag machine he had brought with him as a sample. This was later found to be a Necci zigzag machine and they started making copies of this machine under their brand. However, at the time of export this similarity to Necchi was recognized by MITI. The export was disallowed and they were instructed not to make an exact copy of the Necchi zigzag machine. Then followed a period of development in which alterations were made to avoid any claims of infringement of Necchi patents. This resulted in the introduction of the SZ-10 type which is a modified version of the fixed eccentric cam style such as Necchi. The automatic type using many cams was first introduced to the local market in October 1954 and the announcement was made in the "Japan Sewing Machine Times" on October 15, 1954, a translation of the actual article is attached hereto for your information.

As a result of this we feel we must conclude that no automatic zigzag machine existed in the local market prior to May of 1952.

You will recall from our letter referred to above that we planned to contact a Mr. Matsuki, Patent Judge, who, we were given to understand, ruled on a patent application submitted in 1950 by Mr. Matsuda for patent on a zigzag machine. Our Mr. Saji followed up on this but was unable to contact Mr. Matsuki. However, he did meet Messrs. Kon and Konishi, Examiners in the Textile Section, who mentioned that the various applications for patents and utility model registrations on the multi-cam zigzag machine were passed much in their original form as they had been unable

to find any prior printed disclosures on the device. They [fol. 5216] have various trade publications on file but what information they do have on automatic zigzag machines is all dated later than May 31, 1952.

A recent development is the following article in the current edition of the "Japan Sewing Machine Trade News", in which San Shin issued warning against infringement of their patent rights:

"Sanshin Sewing Machine Co. Issues Warning Against Infringement of Patent Rights

Of late, a large number of manufacturers in this country have launched into the production of zigzag sewing machines, and, as a result, the problem concerning the infringement of patent rights has come to the fore.

The Shanshin Sewing Machine Mfg. Co., Ltd., which is widely known as one of the first zigzag sewing machine manufacturers of this country, has issued a warning to all concerns undertaking the manufacture of zigzag sewing machine equipped with a cam similar in structure to that which the Sanshin Co. secured patent (Pat. No. 213,096—Application #11318/1951) in March 1955, after filing an application in 1951. The said company was forced to take this action, because zigzag sewing machines of other makes which are equipped with a cam similar to the one manufactured by the company is wielding an adverse effect on the company's business.

The cam manufactured by the Sanshin Sewing Machine Mfg. Co., Ltd. consists of two or more cams which can be individually operated by means of a roller of the spring device connected to a dial.

The company has urged all zigzag manufacturers to immediately suspend the sale of sewing machines which, in any way, infringe upon the patent rights maintained by the said company, and has announced that it would take legal action against those who utilize the said cam without the company's permission."

We will endeavor to see Mr. Matsuki, but in view of the information that has so far been obtained we are doubtful that he will be able to shed any new light that will be helpful in resolving the matter.

Yours very truly, Singer Sewing Machine Company,
J. M. McKinnon, General Manager.

JMM:s

Encl.

cc: Mr. M. L. Waterman, Mr. A. K. Aurell.

[fol. 5217] In United States District Court,

Defendant's Exhibit 24

air mail

January 26, 1956.

Please refer to File P35-181

Mr. James M. McKinnon,
Singer Sewing Machine Company,
No. 6, 1-Chome, Shinkawa Chuo-Ku,
C. P. O. Box 813,
Tokyo, Japan.

Dear Mr. McKinnon:

Possible Printed Disclosures in Japan of Multi-Cam Ornamental Stitch Sewing Machines

Thank you for your letter of January 20, 1956, J10-42, summarizing your latest findings in connection with this investigation.

From your letter it appears to be rather conclusive that no multi-cam ornamental zigzag stitch sewing machines were publicly introduced in the Japanese market prior to May 1952. It would further appear that the first of such machines was introduced in Japan in the latter part of 1954. From this it would seem that the various Japanese patents listed in our letter to you of October 25, 1955 disclose

multi-cam ornamental stitch sewing machine designs which before 1954 never were incorporated in machines publicly used in Japan.

We note from your letter that you are planning to see a Mr. Matsuki for the purpose of corroborating your findings as above outlined. In any event, the information which you [fol. 5218] have developed for us to date has been most helpful and we wish to thank you for your efforts on our behalf for we appreciate the amount of time and trouble that this investigation caused you.

Yours very truly, The Singer Manufacturing Company, ——, ——, Patent Department.

CC: Mr. M. L. Waterman, Mr. A. K. Aurell.

[fol. 5219] In United States District Court

Defendant's Exhibit 25

Received Patent Department, February 3, 1956, Answered February 7, 1956

Singer Sewing Machine Company
No. 6, 1-Chome, Shinkawa, Chuo-Ku
Tokyo, Japan
C. P. O. Box 813

January 28, 1956.

Mr. J. G. Stanford
The Singer Manufacturing Company
Patent Department
Elizabethport F, N. J.

Dear Mr. Stanford:

Further to our letter J10-42 of January 20th, we can report that our Mr. Suda of our Nagoya MTD operation investigated Mr. B. Taketomi, the individual who is shown on

the list as owning three applications. He reports as follows:

> "Accompanied by Mr. A. Iwamoto, shop salesman, I visited Mr. B. Taketomi's residence at 2-9 Uchiyama-cho, Chikusa-ku, Nagoya yesterday afternoon. Mr. Taketomi was away on a trip and I talked with his wife. She mentioned that the application so far filed, coming to the production stage, have been sold to an interested concern.
>
> Mr. B. Taketomi's residence, located halfway between the south side of Sakura Street and north side of Joto Hospital, Chikusa-ku, consists of a single-story house (shack) of 18 ft. wide and 12 ft. deep and a workshop of 12 ft. wide and 18 ft. deep; there were neither workers, machines, nor equipment. He has three children and the family consists of 5.
>
> It seems that Mr. B. Taketomi makes living by designing sewing machines and obtaining patents for his works.
>
> It was found that Mr. Taketomi sold his patents on zigzag sewing machines to Nippon Mishin Manufacturing Company (Brother) around March and July, 1954.
>
> Details were not found concerning the above information due to his absence: However, I believe that the above will be confirmed by the fact that the Brother Mishin Company started selling its new zigzag sewing machines Hz2B1 on March 15, 1954 and automatic zigzag sewing machines in July of the same year.
>
> According to his wife, Mr. Taketomi is an old friend of Brother Mishin".

[fol. 5220] Other than direct approach to the Brother people or a technical comparison between Brother's present zigzag machine and those patents held by Taketomi we are unable to confirm that the Nippon Sewing Machine Manufacturing Co. (Brother) are using the patents. We have not yet been able to determine whether the patents have been assigned to Brother by Mr. Taketomi.

Also Mr. Saji has been able to meet with Mr. Matsuki, Patent Judge, at the Patent Agency and herewith his report on this meeting:

> "He was unable to give us any data prior to the critical date, May 31, 1952. He stated all of the ten patent/utility model applications on multi-cam zigzag machines were examined after May 31, 1952. As he had no data on automatic zigzag machines he had hoped there would be oppositions filed, but he was disappointed.
>
> From what Mr. Matsuki has heard, some of the larger sewing machine companies are manufacturing automatic zigzag machines, but that Matsuda and Taketomi are the pioneers in this line. Apparently Mitsubishi, Rhythm and others had started research into automatic zigzag machines, but discontinued the hard work and left the field to Matsuda and Taketomi. Some time after the critical date (May 31, 1952) Mr. Matsuki had heard of a 'Bernina' and/or an 'Elna' multi-cam zigzag machine being brought into Japan and carefully studied and perhaps copied.
>
> Mr. Matsuki confirmed what the other Patent Examiners stated was Mr. Taketomi's occupation—that of a free lance inventor. Mr. Taketomi's name has appeared on many patent/utility model applications concerning sewing machines from some time back and Mr. Matsuki remarked that whereas formerly Mr. Taketomi had filed his applications through a Patent Attorney, he is now filing them himself."

Unfortunately, the foregoing information is of no help to the problem before us.

Yours very truly, Singer Sewing Machine Company,
J. M. McKinnon, General Manager.

JMM:s

cc: Mr. M. L. Waterman, Mr. A. K. Aurell

[fol. 5221] IN UNITED STATES DISTRICT COURT

DEFENDANT'S EXHIBIT 26

air mail

Please refer to File P35-181.

February 7, 1956.

Mr. J. M. McKinnon,
Singer Sewing Machine Company
No. 6, 1-Chome, Shinkawa, Chuo-Ku,
C.P.O. Box 813,
Toyko, Japan.

Dear Mr. McKinnon:

Possible Printed Disclosures in Japan of Multi-Cam Ornamental Stitch Sewing Machines.

Thank you for your letter of January 28, 1956, J10-61, summarizing your latest findings in connection with this investigation. It would appear from your above noted letter, taken in conjunction with your prior letter to us of January 20, 1956, that it is rather conclusive that no multi-cam ornamental zigzag stitch sewing machines were publicly introduced in the Japanese market prior to May 1952. Also, it would appear that such multi-cam ornamental stitch sewing machines were first introduced in Japan in the year 1954.

Apparently the Japanese patents listed in our letter to you of October 25, 1955 disclose multi-cam ornamental stitch sewing machine designs which were not incorporated into actual working models until some time shortly before 1954. We were most interested to learn that Mr. Taketomi sold his Japanese patents on zigzag sewing machines to [fol. 5222] Nippon Mishin Manufacturing Company (Brother) around March and July 1954.

In view of your findings, there appears to be little doubt but that their exists in Japan no prior art material which we could use in order to invalidate a United States or a European patent having a priority date of May 31, 1952. We believe that your investigation has been most comprehensive and, thus, unless you have certain definite leads

which you wish to investigate further, we would suggest that this matter be considered as closed. Again we wish to thank you for your efforts on our behalf.

As a matter of interest, it would appear to us that the various Japanese patents listed in our letter to you of October 25, 1955 broadly claim multi-cam ornamental zigzag stitch sewing machines to the extent that such patents would presumably be infringed in Japan by the newly proposed Singer Class 282 and Class 319 machines. In view of this situation, and in view of our relations with the various United States Brother companies, we would consider it inadvisable at this time for any of your agents to make any direct approach to the Brother people for the purpose of eliciting information concerning the Japanese [fol. 5223] Taketomi patents. Such inquiries would perhaps alert the Brother people to this situation particularly if the inquiries were traced back to Singer agents.

Your very truly, The Singer Manufacturing Company ——, ——, Patent Department.

cc: Mr. M. L. Waterman, Mr. D. P. Kircher, Mr. A. K. Aurell.

[fol. 5224] In United States District Court

Defendant's Exhibit 27

Received Patent Department, March 9, 1956, Answered—

March 1, 1956.

Confidential

Mr. Edgar Winteler
Compagnie des Machines a Condre Singer, S.A.
Singer Building, 13 Rue de la Confederation
Case Postale, Stand 47-763
Geneva, Switzerland

Dear Mr. Winteler:

With Mr. Graesser, Mr. Stanford and Mrs. Waterman, I am planning to come to Europe in about a month. The present plan, as far as I can definitely determine, is to ar-

rive in Genoa on April 9 and to stay over that night in Genoa and proceed at once on the morning of April 10 to Zurich. We do not now know how long we shall remain in Switzerland. This will depend upon whether we will at that time wish to enter into conversations with the heads of the Bernina Company or not. We shall know more about this in ample time so that I can advise you before we leave New York, which will be on March 31.

I would suggest that you, at least temporarily, reserve accommodations for the four in our party at the Baur-Au-Lac Hotel beginning the evening of April 10—I believe the train will arrive from Genoa around 5 P.M. in the afternoon, but I will let you know definitely about this later—and through Monday, April 16. The present plans would then comprehend our leaving Zurich in the afternoon of the 16th and possibly proceeding by air to Milan, arriving there late that afternoon.

As mentioned previously, there is the possibility that we will be wishing to talk with the top management of the Bernina Company, and we are interested to learn if you are acquainted with the persons who are in the responsible management positions. If so, we would appreciate learning their names, and if you have had any dealings with them to learn what you may know about them. Under no circumstances, however, do we wish you to pass any word to any persons in that company that we do have any intention of speaking with them about any matter, nor of speaking to any other persons who might apprise them of the possibility of meeting with them that I have mentioned. Any information that you can give to me about the Bernina Company's operations, as may have been reported to you in one way or another of late, would also be of the greatest interest.

Yours very truly,

[fol. 5225] In United States District Court

Defendant's Exhibit 28

March 8, 1956.

M. L. Waterman, Esq., Vice-President,
The Singer Manufacturing Company,
Singer Building, New York.

Dear Mr. Waterman:

Multi-Cam Ornamental Stitch Sewing Machines

With reference to Mr. C. F. Baumann's letter to you of March 31, 1956 and to our recent telephone conversation I am enclosing a draft of a letter of the type which could be sent to Mr. Winteler under your signature.

We feel that Mr. M. C. Lightner's letter of August 16, 1955 to Mr. W. P. Evans in relation to the Singer-Vigorelli matter was especially good and we have altered Mr. Lightner's letter so as to make it appropriate in connection with the present Singer-Gegauf matter. We believe that this letter is specific enough to impart to Mr. Winteler a sufficient working knowledge of the Singer-Gegauf matter to enable him to appreciate the situation, but at the same time the letter avoids specific details which at the moment are of no concern to Mr. Winteler. Naturally, it would be advantageous to withhold from Mr. Winteler as well as Gegauf any detailed knowledge of the present situation until we have had an opportunity of negotiating in person with the Gegauf management.

[fol. 5226] In other words, it would appear to us that it would be advisable to handle the present Gegauf situation in substantially the same manner as the Singer-Vigorelli affair.

Yours very truly, The Singer Manufacturing Company, ——, ——, Patent Department.

In triplicate.

Enclosure—

Proposed letter

[fol. 5227] Proposed Letter

Mr. E. Winteler,
Compagnie des Machines a Coudre Singer S.A.,
Singer Building,
13 Rue de la Confederation,
Case Postale, Stand 47-736,
Geneva, Switzerland.

Dear Mr. Winteler:

In connection with the developments which we have under way in the matter of zigzag machines, we find that there probably is some conflict between patent rights which we have, or which we expect to obtain, and rather similar patents that are being obtained by Fritz Gegauf A.G., Bernina-Nähmaschinen-fabrik.

It is altogether probable that we may become involved in litigation with Gegauf, not only in Switzerland but also in some other countries such as Germany and the United States, unless by talking matters over with them we can find some basis of agreement which would enable us to be free from claims by them and perhaps accord similar immunity with respect to claims by us based on our own patent rights. That is the situation as we see it from here and we feel that if any such discussion is to take place, it would be better to initiate it at an early date rather than wait until some of the developments now under way are brought out on the market.

The question is how to initiate such a discussion, and it is that which has caused me to write this letter to you. Perhaps you have a certain acquaintance with the Gegauf management and I would be most obliged if you would let [fol. 5228] me know exactly what this is and whether you feel that your contact with them is of such character that it would facilitate the opening of a discussion.

I would be very glad to receive any information that you could send me along this line. You will understand that my inquiry at the moment is purely exploratory and that I would not wish to have you say anything to Gegauf until we have received the benefit of your reply to this letter and have considered further the question of what course it might be wise for us to take.

As you know, I plan to be in Switzerland within the very near future and Mr. Stanford will be with me. Perhaps if all goes well we can at that time negotiate with Gegauf in order to effect some mutually beneficial arrangement between Gegauf and Singer. In any event, I will make no definite plans in this direction until I have had the benefit of your comments concerning your acquaintance with the Gegauf management and your suggestions as to the best manner of approaching such acquaintance relative to this subject. Since time is running short I would appreciate hearing from you as soon as possible.

[fol. 5229] IN UNITED STATES DISTRICT COURT

DEFENDANT'S EXHIBIT 29

March 9, 1956.

Personal

C. F. Baumann, Esq.,
Milan, Italy.

Dear Mr. Baumann:

Your letter of March 3rd, with the report of Dr. Lando's visit to Pavia, was greatly appreciated. There is no change at the moment in our plans to proceed directly to Switzerland from Genoa. We are undertaking to have the proper arrangements made in Switzerland so that we can meet with the proper persons of the Bernina Company, although this information should not be passed along to Mr. Vigorelli or any others other than yourself and Dr. Lando. I should comment most favorably on the completeness of Dr. Lando's report and the extent of the information which he was able to secure.

Very truly yours, ——, ——, Vice President.

[fol. 5230] IN UNITED STATES DISTRICT COURT

DEFENDANT'S EXHIBIT 30

GC13

SBZ1625/125 Zurich 53 13 1215
Singer for Lightner New York

Yesterdays Steckborn Conference Not as Straight Forward as at Pavia Last Fall Due Quite Obviously to a Feeling Of Assurance their Situation Is the Superior One Also Suspicious Our Intentions This Feeling Apparently Became Dissipated By end of our Sevenandhalf Hour Meeting Stop Next Conference Tomorrow Saturday Afternoon.

Waterman.

[fol. 5231] IN UNITED STATES DISTRICT COURT

DEFENDANT'S EXHIBIT 31

Received Patent Department, April 30, 1956, Answered—

The Singer Manufacturing Co.
Singer Building
149 Broadway
New York 6, N. Y.
Division of Research

In Replying Please Refer to 31-026

Dictated at Zurich April 15, 1956.

Bernina Agreement

When we arrived here Tuesday, I met Mr. Kirker from Geneva. He is a very good man, and we worked very well together. One of the first things we did was obtain from the Patent Office at Bern a copy of the Bernina application. As you know, the date of registration on this patent was November 1955, and it was published on February 29th of this year. We studied this patent in some detail, and we found that Bernina had acknowledged in the preamble to

the specification all of the references of which we thought we could destroy most of the claims of Bernina. The principal claim read directly on our 282 Experimental Machine, and it was Mr. Kirker's feeling that this claim would stand up in the Swiss courts. His reasoning was based somewhat upon the fact that the registration could be prior to January 1956 and, therefore, the references would not be available to use had the patent been registered after January 1956. Under the new Swiss law, entire patents which we intended to use would then have been good anticipations. One of the interesting features of this Swiss patent was the fact that it disclosed only one modification, namely the modification in which a single cam selector played over the entire series of cams. We learned also that there were no divisions of the original patent but that there was a patent application of addition, which was filed in April 1953. It would seem from the facts available to us at that time that the priority date claimed by Bernina for their patent applicatioon in Italy applied only to the first modification or, namely, to the same modification as shown in the Swiss patent and, therefore, Brutsch, which was filed in September 1953 came before the disclosures of the other modifications. In discussing this matter with Bernina's attorney, we learned that the United States application contained all of the modifications shown in the Italian patent and that in Germany only the first modification files, that is the cam selector playing over the entire series, was disclosed.

After discussing the matter almost the entire day with Mr. Kirker it was concluded that it was highly desirable that we enter into an agreement with Bernina concerning the conflicting patents and patent applications relating to the multiple cam machines.

[fol. 5232] As we saw it, Bernina had a patent which would cover our Experimental 282 Machine in Switzerland. They had an Italian patent, the validity of which was in serious question, a German patent application, which in all probability would be published for opposition with a claim which would dominate the Experimental 282 Machine, and then there was the United States application, which had a filing date nine days before the filing of the Harris patent.

On Wednesday, we visited Mr. Gegauf at his factory in

Steckborn. We found it to be a clean, well-organized factory, which I will tell you about when I return. Present at the negotiations, were Mr. Waterman, Mr. Winteler, Mr. Kirker, and myself for Singer; and Mr. Fritz Gegauf, Sr., Mr. Fritz Gegauf, Jr., Mr. Bernhard, Mr. Meyer of the Company Bernina; Mr. Willi of the Patent Attorneys E. Blum of Zurich. I was overjoyed to find that Mr. Willi was representing Mr. Gegauf, for after the things that I had heard about Mr. E. Blum, I could see little possibility of arriving at an amicable solution of the problem with which we were confronted. Mr. Willi turned out to be a very pleasant young man.

The main basis of our negotiations was that both parties had more to gain than to lose by agreeing not to attack each other. Mr. Fritz Gegauf, during these negotiations, was particularly outspoken in his assertions that in his opinion the Brinina patent position was much stronger that was Singer's. Many words passed, and many points were raised but, finally about 8:00 p. m. that night we placed on paper, and in the German language, what might be termed a declaration of intent. It was obvious that the wording of the Vigorelli agreement would not serve in this particular case and, with this in mind, the next day we started a draft on the proposed agreement. The final agreement was finally placed in the English language and, in substance, was as follows:

The first part of the agreement lists the Harris U. S. Patent and the corresponding reissue patent application. It then lists all the corresponding foreign patents and patent applications. We felt it desirable to place all of these patents of record because the list was quite imposing. Following the list of Singer patents, Gegauf lists the four patents in which we are interested. The agreement then goes on to say that Singer and Gegauf interference proceedings are about to be instituted in the United States between the Harris reissue application and the one or more applications of Gegauf, which correspond wholly or in part to his above-listed Swiss and Italian patents.

The first paragraph of the agreement then goes on to say that Gegauf and Singer each undertake not to do anything directly or indirectly in any country, the result of which

would be to restrict the scope of the claims of the other party. The obvious intent of this is to avoid opposition proceedings; in other words, Singer will not oppose the [fol. 5233] applications of Gegauf, and Gegauf will not oppose the applications of Singer. The only countries in which this clause or paragraph has any direct bearing is in Germany and Sweden. In short, we will not oppose Gegauf's German patent application, and they will not oppose any applications which we may have pending which relate to the multiple-cam type of machine.

The last part of Paragraph 1 says that Singer and Gegauf each undertake, in accordance with the laws and regulations of the Patent Office concerned, to facilitate the allowance of claims as broad as possible as regards the subject matter of the patents and patent applications on which the agreement was drawn. The only place that this will be of any importance is in the United States, and the sum and substance of it is that whichever party is entitled to the claim, in accordance with the laws and regulations of the United States Patent Office, will receive the claims. It appears to me that, if Gegauf has filed first, and we know as a matter of fact that Harris could not push his date back of his filing date, then Gegauf would be entitled to the claim which has been suggested to them, or which will be suggested to them when the interference is actually declared.

So, Paragraph 1 contains nothing that could be construed as any collusion on the part of either Singer or Gegauf as to patent matters throughout the world. It simply states that we will not oppose their applications and that we will do all we can to facilitate the allowance. In fact, this is in the public interest because the sooner or the earlier the applications of Gegauf and Singer are out, the more it is to public benefit.

The second paragraph is by far the most important—that is, the second and third paragraphs. In the second paragraph, Singer undertakes not to attack Gegauf either directly or indirectly under the Harris Patent or any of its corresponding foreign patents and, further, that Singer also undertakes not to attack the construction of the present Bornina sewing machine—that is the sewing machine which we had there in the Patent Department and examined carefully to determine just what we thought of its patent status.

As far as I can determine, this paragraph merely gives them the right to continue the manufacture of their machine without fear of infringement of the Harris U. S. application reissue, or the corresponding patents throughout the world. As I stated before, it would seem that they are entitled to the broad claim, and, therefore, this paragraph has little or no meaning as far as the United States is concerned. Its main import would be the French patent and the Canadian application, if it should issue, with broad claims. I [fol. 5234] fully appreciate that at the moment the application in Canada is highly questionable due to the fact that the examiner has apparently suggested a possible interference or conflict with the patent application of another party.

In Paragraph 3, Gegauf undertakes not to attack Singer directly or indirectly in any country on the basis of the patent mentioned in the first part of the agreement. In other words, Gegauf in effect has agreed that both the 319 and the Experimental 282 Machine may be manufactured and sold in any country without fear of patent infringement insofar as his patent applications relating to multiple-cam sewing machine patents are concerned.

In the fourth paragraph of the agreement, Singer undertakes not to manufacture or sell a construction which would be a "slavish copy" of the present construction of the Bernina machine taken as a whole, and also that it will not manufacture or sell the feeler and multiple-cam mechanisms of the said Bernina construction. Bernina seems to be quite worried about Singer copying their mechanism. This is understandable in that they feel their machine is the best on the market and, further, Singer not yet having put a machine on the market, that we really wanted to copy their mechanism. We assured them that this is not so and, to allay their fears, this paragraph was placed in the agreement.

I am sure that when you read paragraph 5 you will be quite surprised. This paragraph was insisted upon by Gegauf, and I suppose that you could, if you wished, accept it as a compliment in that he is very anxious indeed to have the assistance of the patent attorneys of Singer. This raised a considerable problem for us because we did not know how to word it to not make it look as though there

were collusion between Gegauf and Singer. Of course, we did not wish to put this in the contract or agreement at all but, as both our attorney and their attorney and Mr. Gegauf seemed to be quite insistent on the matter, we put it in in such a way that I feel it is almost worthless and innocuous.

Paragraph 5 reads Singer undertakes to give to Gegauf on request of the latter amicable assistance of its attorneys for the defense of any of the above-mentioned Gegauf patents or patent applications against an action of cancellation. Now you will see that we do not agree to assist Gegauf in any offensive action—that is, if he wishes to sue someone on the strength of his patents, that is entirely up to Mr. Gegauf, and Singer does not in any way or is it in any way obligated to assist him in an aggressive use of his patents. On the other hand, if his patents are under attack in a foreign office, we would as I see it under Paragraph 5 be required to simply give him an opinion as to whether or not the attack being made upon his patents was firmly based in law. In other words, we would simply have to express an opinion as to whether or not the references or the pub- [fol. 5235] lications which may be referred to in any attack upon Gegauf patents were of such a nature as to warrant the Patent Office, in the country in which they were attacked, holding the claims of the patent to be invalid and therefore cancelling the patent.

As I mentioned before, I am not at all pleased with Paragraph 5, but there seemed to be no way out, and I certainly think that it is innocuous.

Paragraph 6 sets out that both parties will make known to the other party any previous agreement which they have made concerning the particular patents. We, of course, knew that Mr. Gegauf had entered into an agreement with Vigorelli, and we felt sure that Mr. Gegauf had been informed by Mr. Vigorelli that we had entered into an agreement with him. So, at the time of signing the agreement, Mr. Gegauf stated that he had entered into an agreement with Mr. Vigorelli, and we at the same time said that while our agreement was not the same as his, in that we were concerned with the idea of sensing two cams simultaneously or of taking information from two cams and combining them to obtain a result, however, as far as the Harris Patent was concerned, we had agreed with Mr. Vigorelli that we would

bring no action against him on any claims that we might obtain on the Harris application.

Mr. Gegauf seemed quite relieved when this was all over, and he stated that that morning he had called Mr. Vigorelli to make sure that Mr. Vigorelli had no objection to the agreement, and also he stated that Mr. Vigorelli said that he thought it would be fine if Mr. Gegauf entered into an agreement with Singer.

The remaining part of the agreement is nothing more than the usual clauses to any agreement of this kind. I think that over-all the agreement is all that we could have asked for. You will notice that in this agreement no mention is made of the Johnson application or the Perla application. It seemed to me during the negotiations that it was much better not to bring this matter up—first, we were not particularly anxious to have Mr. Gegauf in possession of that information, although it is interesting to know that he knew all about our 319 Machine and had a photograph there which had been sent to him from Canada. He also called our attention to the fact that he knew that we were tooling-up and getting ready to put on the market a machine which is somewhat similar to his. We assured him that it was not similar in any sense of the word and that it was a completely new machine, completely new to Singer or, as far as we knew, to anyone.

We found Mr. Fritz Gegauf, Sr., to be a very interesting person. He was not at all hard to deal with. He has quite [fol. 5236] a humorous pair of eyes and seems to be a very, very pleasant and straight-forward person. After what we had heard from Mr. Vigorelli in Italy, I had looked for something entirely different.

As far as I can see it at the moment, this agreement with Bernina more or less clears the way for the Experimental 282 Machine. I appreciate that down in Brazil we have a Gegauf matter which we are now poking, and also that Husqvarna has filed a patent application in Portugal that we may have to deal with later on, but it would seem to me that now we have entered into this agreement with Bernina we are free in the principal countries of Europe to place either the 319 or the Experimental 282 Machine on the market without fear of patent infringement. In saying this, I am not unmindful of the fact that in Germany it is

entirely possible that someone will have antedated Bernina but, so far as we know, and as I recall we have gone over the subject exhaustively, no one has filed a patent application prior to Bernina's. A moment ago, when referring to Brazil, I mentioned Gegauf. Of course, you realize that I should have said Brutsch. Bernina having filed first in the United States and, as we cannot take our dates back of our filing date, it would seem that Bernina will be entitled to the broad claims.

We did not approach Mr. Gegauf concerning the possible purchase of his patent with the license back to Bernina. There is a time and place for everything, and we did not think that this was the time. We can consider this matter after we have more information and, if it is concluded advisable, the subject matter can be raised at that time. I am still of the opinion that we could use the Bernina patent application to advantage if we owned it prior to its issuance.

J. G. Stanford.

[fol. 5237] Knowing how interested you are in any subject relating to sewing machines, I am going to digress from the subject of patents for one moment to give you some interesting facts.

The agreement was signed here in Zurich at the principal store of Bernina's. At this store, they sell approximately 2,000 sewing machines each year. Of these total sales, 65% are cylinder bed, automatic cam machines. Mr. Gegauf said that, in his opinion, not over one out of every ten women ever use the automatic cam arrangement in the machine after the first few days—that is, after its novelty was gone—but it seems that they insist upon having this in the machine. As it was said, perhaps it is purchased more for the neighbor than for use. The other 35% of the machines sold represent cylinder bed machines with zigzag mechanism incorporated but without the automatic feature. It was our understanding that only about 5% of all machines sold by Gegauf at this store were the non-zigzag type and that very few flat-bed machines are sold anywhere in Switzerland.

Thank you for your letter concerning the Wurker situation. However, I cannot thank Mr. Wurker for his letter to Mr. Adamson. When we last talked with Mr. Wurker,

he gave us assurance that he would give us a license under his patent in return for an agreement not to bring any action against him on the blindstitch attachment. The position that Mr. Wurker is now taking is not disconcerting; it is downright irritating! His letter to Mr. Adamson leaves me with the distinct impression that he feels that he is in the driver's seat. Will you please ask Bob Smith to send to me at Frankfurt a memorandum setting forth the patent status of the Wurker attachment, together with the references we would expect to rely on in case a cancellation proceeding would appear to be to Singer's advantage. I think that I should have all of this material when I am in Frankfurt, so that we may talk in somewhat strong terms with Mr. Wurker, if it becomes necessary. In short, what I would like is the necessary material to convince Mr. Wurker that he is on the "hot seat" and not in the driver's seat.

Thank you for all of the letters that you have sent. They are very interesting and keep me well-informed of what is going on back home. There is one difficulty in using a machine of this kind. One begins to talk, and then becomes so completely intoxicated with his own conversation that he does not know when to stop.

Please give my best wishes to my colleagues and coworkers there in the Patent Department, and, to any of my friends who may inquire about me, I send greetings.

Auf Wiedersehen!

Say, by the way, how do you like that with a *deep* southern accent?

J. G. Stanford.

[fols. 5238-5240] IN UNITED STATES DISTRICT COURT

DEFENDANT'S EXHIBIT 32

Cablegram sent to Mr. Lightner by Mr. Waterman (dicated over phone Apr. 16, 56)

Agreement signed Stop Means 282 clear throughout world except Japan and perhaps Brazil where we are opposing and Portugal from every presently known claim Stop 319 likewise although was only involved unimportantly

n our present action Stop Still remains possibility in U.S. of (or) some other unknown case arising but this chance quite remote Stop Details by mail advise Patent Department.

M. L. Waterman.

[fol. 5241] IN UNITED STATES DISTRICT COURT

DEFENDANT'S EXHIBIT 34

air mail)

February 11, 1957.

Mr. K. Gebhardt,
Nahmaschinenfabrik Karlsruhe
Aktiengesellschaft,
Karlsruhe (Baden), Germany.

Dear Mr. Gebhardt:

Gegauf Patent Application Serial No. G 15,628

We have received your letter of February 4, 1957 and in response thereto we have this day sent you a cablegram which reads as follows:

"Your protest against Gegauf patent G 15628 would not embarrass Singer and would appear to be advisable."

We agree with you that since Gegauf will not discuss their German patent application No. G 15,628 and your Gebrauchsmuster No. 1,729,923 you have little recourse but to protest the Gegauf patent application. Such a protest will not embarrass Singer as Singer and Gegauf are direct competitors and the recent Singer-Gegauf agreement relating to specific zigzag sewing machine patents does not affect our normal competitive relationship.

We trust that the patent copies which were sent to you under cover of our letter of February 8, 1957 will assist you in your protest against Gegauf patent application No. [fol. 5242] G 15,628. If we can be of any further assistance to you in this matter please advise us.

Yours very truly, The Singer Manufacturing Company, ——, ——, Patent Department.

[fol. 5243] IN UNITED STATES DISTRICT COURT

DEFENDANT'S EXHIBIT 35

March 13, 1957.

M. L. Waterman, Esq., Vice-President,
The Singer Manufacturing Company,
Singer Building, New York.

Dear Mr. Waterman:

Enclosed is the ribbon copy and two carbon copies of our report of the activities of the Patent Department for the year 1956.

We would be pleased to know whether or not the format and the material in this report are satisfactory to you.

Yours very truly, The Singer Manufacturing Company, ——, ——, Patent Department.

Enclosures—

Report (in triplicate)

[fol. 5244] Vice-President's Office

Patent Department Report for the Year 1956

The patent activities of our competitors continued at an accelerated pace throughout the year 1956. Nationals of Japan and Germany have been particularly active in acquiring large numbers of sewing machine patents. In this connection it is apparent that during the past several years Japanese sewing machine manufacturers have filed more patent applications than similar manufacturers of any other nationality. The Japanese patent activity at the moment seems to be concentrated on family sewing machines rather than on industrial type machines with particular emphasis being directed to the automatic ornamental stitch variety. It is obvious that our competitors are continuing to devote considerable effort to improve the function and usefulness of sewing machines, and to protect these improvements.

[fol. 5245] During the past year the Patent Department continued to be actively involved with the patent situation surrounding the Singer Classes 401 and 319 machines. As

mentioned in our 1955 Patent Report there appeared to be at least two outstanding groups of patent applications owned by competitors which would interfere with the manufacture and marketing of the Classes 401 and 319 machines in the various principal countries of the world, such applications being owned by the Italian firm of Vigorelli and the Swiss firm of Gegauf-Bernina. In 1955 Singer was able to negotiate a free license agreement with Vigorelli, and during 1956 a similar agreement was executed between Singer and Gegauf-Bernina.

During the past year our various Singer patent applications relating to the Class 319 machine became involved in conflict proceedings in various countries of the world, including the United States, with applications owned by the German firm of Messerschmitt A.G. It would appear that Messerschmitt might ultimately acquire patents in Europe which would interfere with our Class 319 machine, but the contrary situation appears to prevail in the United States where we would expect to be in a position to dominate [fol. 5246] Messerschmitt. In view of this situation negotiations have been carried on during the past year with Messerschmitt for the purpose of working out a license agreement of the type employed in the Vigorelli and Gegauf-Bernina situations. There is evidence that a Singer-Messerschmitt agreement may soon be concluded so that we will be free to manufacture and market the Class 319 machines in the various European countries without the fear of being involved in patent infringement suits.

[fol. 5247] IN UNITED STATES DISTRICT COURT

DEFENDANT'S EXHIBIT 36 (S-8)

Agreement

Agreement dated ——, 1957, between The Singer Manufacturing Company, hereinafter called "Singer", a Corporation organized and existing under the laws of the State of New Jersey, United States of America, and Fritz Gegauf Aktiengesellschaft, Bernina Nähmaschinenfabrik in Steckborn, Switzerland, hereinafter called "Gegauf," a

Corporation organized and existing under the laws of Switzerland, for them and their respective successors.

Whereas, Singer and Gegauf have agreed by agreement dated April 12, 1956, inter alia, that neither party will attack the other in any country of the world on the basis of certain patents and patent applications identified in such prior agreement.

Whereas, Singer and Gegauf agree that their prior agreement of April 12, 1956 shall continue to the end of its normal term and that the present Agreement will modify the prior agreement of April 12, 1956 only to the extent necessary to carry out the spirit and intention of the present Agreement.

Whereas, Gegauf has as of the day and year written above assigned to Singer, its successors and assigns; for the territory of the United States of America, the entire right, title and interest in and to United States patent application Serial No. 358,377 filed May 29, 1953 and to the inventions disclosed therein and in and to any and all United States patents which may be granted therefor and in and to any and all extensions, divisions or reissues of such patents, and Gegauf is desirous of acquiring therefor, in return for the territory of the United States of [fol. 5248] America, a nonexclusive, nontransferable and royalty-free license to manufacture and/or sell sewing machines as disclosed in the said United States patent application Serial No. 358,377 and in any and all United States patents which may be granted therefor.

Now, therefore, in consideration of the premises the parties agree as follows:

(1) In consideration of Gegauf's sale to Singer of the entire right, title and interest in and to United States patent application Serial No. 358,377, to the inventions disclosed therein, and in and to any and all United States patents which may be granted therefor including any and all extensions, divisions or reissues of such patents, Singer will pay to Gegauf the sum of
upon the execution of this Agreement.

(2) Singer hereby grants unto Gegauf a nonexclusive, nontransferable and royalty-free license to manufacture and/or sell in the United States of America sewing ma-

chines of the type disclosed in United States patent application Serial No. 358,377 and in any and all United States patents which may be granted therefore.

(3) Gegauf hereby agrees to assist Singer in acquiring a United States patent based on patent application Serial No. 358,377 to the extent that it will cause the necessary papers and drawings to be properly executed and to do any acts necessary to be done for the procurement of a valid patent or for the reissue, extension or division of any such patent without charge to Singer but at Singer's expense.

[fols. 5249-5255] In witness whereof the parties have executed this Agreement in duplicate as of the day and year written above.

The Singer Manufacturing Company, By ——, ——,
Vice-President.

Witness:
——, ——.

Fritz Gegauf A. G. Bernina Nahmaschinenfabrik, By
——, ——.

Witness:
——, ——.

[fol. 5256] In United States District Court

Defendant's Exhibit 39

President's Office Received April 16, 1958, Answered—

The Singer Manufacturing Company
Patent Department
Elizabethport F, New Jersey

April 16, 1958.

D. P. Kircher, Esq., President.
The Singer Manufacturing Company,
Singer Building, New York.

Dear Mr. Kircher:

Proposed Patent Infringement Suit Against Brother International Corporation and Others

Enclosed is Mr. Brumbaugh's bill for services rendered during February and March in connection with the proposed patent infringement suit against the various United States Brother concerns. This bill appears to us to be in order.

Our United States Gegauf patent application will issue as a patent on April 29, 1958 and we should be ready to file suit against the United States Brother concerns on that date. With your approval, we proposed to file one or more of these suits on or about April 29 unless in the meantime the Japanese Brother Company responds favorably to Mr. Waterman's letter.

Yours very truly, The Singer Manufacturing Company, J. G. Stanford, Patent Department.

Enclosure—
Bill.

Discussed with Williams 4/16. Told him to hold off on filing until I return from Europe. K.

[fol. 5257] IN UNITED STATES DISTRICT COURT

DEFENDANT'S EXHIBIT 40

The Singer Manufacturing Co.
Singer Building
149 Broadway
New York 6, N. Y.
Division of Research

In Replying Please Refer to MLW:V3

May 20, 1958.

Memorandum

Subject: Second Visit of Mr. M. Yasui, President of the Brother Company, at 149 Broadway.

Present were: Messrs. Yasui, Kawashima and Nakagawa of Brother, Japan, and Mr. Max Hugel of Brother International, New York; Messrs. Stanford, Williams and Breen of the Patent Department, Elizabethport and Mr. M. L. Waterman.

The three persons mentioned in the memorandum of May 14th and Mr. Max Hugel again visited 149 Broadway on May 20th in connection with the patent matter referred to in that memorandum.

Mr. Yasui had not received any report from his patent attorneys concerning the patents which had been discussed with him. He stated that he was returning to Japan tomorrow and would arrive there about June 1st and that he would immediately pursue the question of these patents with his attorneys and advise us promptly. He was handed a list of all patents concerned with the two Brother machines in question, which included an item referring to the 401 Machine patent, which is to be issued within a very few weeks. Previous to this, he had had no knowledge of this patent application.

The result of this visit was that Mr. Yasui was informed it was necessary that we take action because of the great number of machines of various makes that are being imported into the United States which infringe our patents and our application, which will become a patent shortly. He

was informed that we were obliged to start proceedings at once but that we would in no way publicize our action, hoping that he would be able to receive the report of his attorneys and take the matter up further with us before the subject would become common knowledge. No mention [fol. 5258] was made by Mr. Yasui or Mr. Hugel of any action that they would propose to take to resolve this matter, but the reason for this was stated as being because they had no knowledge of the status of the patents about which we had advised him.

After the departure of the visitors, Mr. Williams was instructed to proceed at once with the institution of the suit against Brother International Corporation for patent infringement.

M. L. Waterman.

[fol. 5259] IN UNITED STATES DISTRICT COURT

DEFENDANT'S EXHIBIT 41

Copy for Mr. M. L. Waterman

Airmail

August 5, 1958.

Mr. J. M. McKinnon, General Manager
Singer Sewing Machine Company
Tokyo

Dear Mr. McKinnon:

Amendments—Basic Agreements

Thank you for your very thoughtful review of the situation to date in regard to our new application for validation as outlined in your E-406/58 of July 23rd and, after much discussion here, it has been decided to proceed with the patent infringements both in Japan and in the U.S.A. as per the information extended through the attached letter from the Patent Department.

We believe you will be pleased to find that, generally speaking, the policies being followed in regard to the patent infringements will not disturb your efforts, and the efforts of our friends in Pino and Japan Steel in regard to valida-

tion. We think in advising our friends of the patent situation you should use the deferments in the actions (whether necessary or otherwise) to emphasize how closely we are cooperating and giving every consideration to their views and thus we expect they will push in every way possible for prompt validation of the basic agreements as now amended.

Very truly yours, Singer Sewing Machine Company,

J. G. Standford, Assistant Vice-President.

cc: Mr. D. P. Kircher, Mr. M. L. Waterman, Mr. J. G. Stanford.

[fol. 5260] IN UNITED STATES DISTRICT COURT

DEFENDANT'S EXHIBIT 42

August 26, 1958.

M. L. Waterman, Esq., Vice-President,
The Singer Manufacturing Company,
Singer Building, New York.

Dear Mr. Waterman:

German-Made Phoenix Zigzag Sewing Machine, Class 283.

On May 14, 1958 we sent you a report, under the above noted heading, stating that the subject Phoenix machine would infringe the following Singer-owned patents:

U.S. No.	Re.24,370,	Oct. 8, 1957,	Harris,
" "	2,832,302,	Apr. 29, 1958,	Gegauf,
Can. "	552,072,	Jan. 22, 1958,	Harris.

You have raised the question as to whether Singer should take any action against the United States importers and dealers of the Phoenix machine on the basis of our United States patent rights.

As you know, the above noted United States Harris and Gegauf patents are currently being infringed by a relatively large number of Japanese-made and a relatively small number of European-made sewing machines. To date, we have filed one civil suit against Brother Interna-

tional Corporation, the United States importer of the Japanese-made Brother machines. During the first week of September, we propose to file in South Carolina a civil suit against a dealer of Japanese-made Sanshin machines. We chose to file civil suits in connection with the Brother and Sanshin machines since it is our understanding that these particular machines are imported into the United States in rather large quantities.

By the latter part of September we plan to file an action with the United States Tariff Commission for the purpose of preventing the importation into the United States of any and all sewing machines which infringe our United States Gegauf and Harris patents. Success before the Tariff Commission should obviate the necessity of Singer bringing separate civil suits against each importer of an infringing machine, whether it be made in Japan or in [fol. 5261] Europe. In view of this situation it is our recommendation that we should hold in abeyance the filing of any further civil suits until such time that we have a rather definite indication as to the status of our Tariff Commission action. In the event that our Tariff Commission action fails, then it would be in order to file civil suits against any infringers of our subject patents.

Yours very truly, The Singer Manufacturing Company, ——, ——, Patent Department.

In triplicate.

[fol. 5262] IN UNITED STATES DISTRICT COURT

DEFENDANT'S EXHIBIT 43

The Singer Manufacturing Company
Patent Department
Elizabethport F, New Jersey

September 17, 1958.

M. L. Waterman, Esq., Vice-President,
The Singer Manufacturing Company,
Singer Building, New York.

Dear Mr. Waterman:

Singer v. Sewing Machine Exchange

Enclosed is a copy of a Complaint which was filed on September 10, 1958.

This Complaint was filed against Sewing Machine Exchange, a retail sewing machine store in Anderson, South Carolina. The suit was filed with respect to a Universal zigzag stitch sewing machine which was purchased on June 23, 1958. This Universal machine is manufactured in Japan by Sanshin and imported into and distributed throughout the United States by Standard Sewing Equipment Corp. of New York. As you know this machine infringes our Gegauf patent No. 2,832,302 and our Harris reissue No. Re. 24,370.

We have been advised that the proprietors of the Sewing Machine Exchange are not interested in defending this suit and are willing to enter a consent decree. However, since we are primarily interested in having Standard Sewing Equipment Corp., the importers and distributors of the offending Universal machine, defend this suit, we are endeavoring at the present time to encourage the attorneys for the Sewing Machine Exchange to contact Standard Sewing Equipment Corp. with a request that the latter party take over the defense of the suit.

We shall keep you advised as to all developments in this matter.

Yours very truly, The Singer Manufacturing Company, J. G. Stanford, Patent Department.

In triplicate

Enclosure—

Copy of action

CC: Mr. D. P. Kircher.

[fol. 5263] IN UNITED STATES DISTRICT COURT

DEFENDANT'S EXHIBIT 44

Received M. L. W., December 10, 1958, Answered—

The Singer Manufacturing Company
Patent Department
Elizabethport F, New Jersey

December 10, 1958.

M. L. Waterman, Esq., Vice-President,
The Singer Manufacturing Company,
Singer Building, New York.

Dear Mr. Waterman:

Singer v. Sewing Machine Exchange, Civil Action No. 2429

Singer v. ALCO Appliance Distributing Company, Civil Action No. AC-241.

In our letter to you of September 17, 1958 we advised that a Complaint had been filed in the name of The Singer Manufacturing Company against Sewing Machine Exchange, a retail store located in Anderson, South Carolina. This Complaint was filed with respect to a Japanese-made Sanshin machine sold by Sewing Machine Exchange under the trademark Universal. These Universal machines were imported into and distributed throughout the United States by Standard Sewing Equipment Corp. of New York. As you know, our Complaint involved a patent infringement action alleging that the Universal machine infringes our

Gegauf patent No. 2,832,302 and our Harris reissue patent No. Re. 24,370.

Unfortunately, neither Sewing Machine Exchange nor Standard Sewing Equipment Corp. would defend this suit and as a consequence we accepted from Sewing Machine Exchange a consent decree of which a copy is enclosed. You will note that by way of this consent decree the defendant admitted the infringement and the validity of the several Singer patents.

Since we were unable to come to trial with respect to the Sewing Machine Exchange suit, we filed on December 2, 1958 a second Complaint in South Carolina based upon the above noted Gegauf and Harris patents. This second Complaint was brought against ALCO Appliance Distributing Company, a retail store located in Columbia, South Carolina. This Complaint was filed with respect to a Japanese-made Sanshin machine sold by ALCO under the trademark Fleetwood which machine was imported into and dis- [fol. 5264] tributed throughout the United States by Fleetwood Industries, Inc. of New York, formerly S.K.S. Machine Company. We hope that either ALCO or its supplier Fleetwood Industries, Inc. will defend the present infringement suit.

We shall keep you advised as to all developments in this matter.

Yours very truly, The Singer Manufacturing Company, J. G. Stanford, Patent Department.

In triplicate

Enclosure—

Copy of consent decree

CC: Mr. D. P. Kircher, w/copy of consent decree.

[fol. 5265] IN UNITED STATES DISTRICT COURT

DEFENDANT'S EXHIBIT 45

January 14, 1959.

M. L. Waterman, Esq., Vice-President.
The Singer Manufacturing Company,
Singer Building, New York.

Dear Mr. Waterman:

Annual Report for 1958.

As requested in your letter of December 9, 1958 MLW: V3, we are enclosing a ribbon copy and five carbon copies of our report of the activities of this Department for the year 1958.

Yours very truly, The Singer Manufacturing

Enclosures—

Copies of report (6)

[fol. 5266] Vice-President's Office

Patent Department Report for the Year 1958

Patent Status of Automatic Zigzag Machines

Some five years ago, this office was primarily concerned with the determination of the legal risks involved if our Company were to make and sell the Class 319 and 401 machines. At that time it was evident that one or more of our competitors owned United States and foreign patent rights which could seriously interfere with our automatic zigzag machine program.

With the subsequent acquisition by Singer of domestic and foreign rights under the Harris, Vigorelli, Messerschmitt and Gegauf patents and the ultimate issuance to Singer on April 29, 1958, of Gegauf United States patent No. 2,832,302, our concern switched rather sharply from problems of defense to those of offense. This was caused by the fact that the Gegauf patent is presently being in-

fringed in the United States by substantially all of the competing automatic zigzag machines.

However, since all of these infringing machines are manufactured abroad, we have, on the basis of our United States Gegauf patent, no legal remedy against the makers of such machines. Further, it would not be feasible to attempt by civil court action to enforce our patent rights against the large and ever-changing body of United States importers and distributors of the infringing machines.

Accordingly we are attempting to gain relief through the seldom-used United States Tariff Rule 337 which, if successful, would result in a Presidential decree banning all further importation of the infringing machines during the life of our Gegauf United States patent. The Complaint praying for such relief was filed on January 14, 1959.

As a part of an all-out attack against these infringers and as a hedge against any possible failure of our Tariff action, a limited number of civil patent infringement suits have been instituted. The first of these suits was filed in May, 1958 in the District Court for the Southern District of New York against Brother International of New York City, one of the largest importers and distributors of infringing Japanese-made machines.

[fol. 5267] For the purpose of obtaining an early adjudication of our Gegauf patent a second civil suit was filed in September, 1958 in the District Court for the Western District of South Carolina against Sewing Machine Exchange, a retail dealer selling infringing Japanese-made machines in Anderson, South Carolina. Sewing Machine Exchange did not defend the suit and as Standard Sewing Equipment Corporation of New York, the importer and distributor of these machines, refused to protect its customer against our charge, Singer had to be content with a consent decree. Although this decree will prevent Sewing Machine Exchange from dealing further with such infringing machines it does not constitute a court adjudication of our patent.

Following this consent decree we filed a second suit in South Carolina in December, 1958 against Aco Appliance Distributing Company, a retail distributor of infringing Japanese-made machines in Columbia, South Carolina.

On December 2, a Johnson United States patent, No. 2,862,468 issued to Singer which, like the Gegauf patent, protects the Class 401 machine. As the Johnson patent is

infringed by the machines against which we have filed suit in both New York and South Carolina, the complaint in each case is being amended to include such patent.

Singer has been approached by Sears, Roebuck and Company for a license under the Gegauf United States patent to import and sell in the United States, an automatic zig-zag machine made in West Germany. A general understanding has been reached and we anticipate the signing of such a license within a short time. Under this license Sears, Roebuck and Company will pay Singer a royalty for each machine it imports into this country.

[fol. 5268]. It has been our long-standing practice to examine all of the patents of our foreign competitors as soon as they are open for opposition. This patent watch during the past several years has developed a startling large number of Japanese patent applications disclosing original improvements in household sewing machines. This indicates that the Japanese are devoting much time and money to household sewing machine research and development. It is apparent when viewed in the light of patents open for inspection, that the Japanese household sewing machine industry has passed the stage where it depends for its advance upon developments originating in the West.

It is equally manifest from our patent watch that the Japanese industrial sewing machine industry is now at the point where the Japanese household sewing machine industry was some ten years ago. In other words, the Japanese are presently at the stage where they are merely duplicating Western type industrial sewing machines. However, while the greater efforts of the Japanese now seems to be directed toward the development and refinement of household machines, we are inclined to the opinion that as soon as the Japanese manufacturers pass through the first phase of copying Western industrial machines they will then devote their efforts toward refining such machines. At the present time published patent applications indicate that the Japanese are particularly concerned with rotary thread take-up devices, rotary hooks and lubricating systems all relating to industrial sewing machines.

It is also interesting to note that the Japanese are filing patent applications in the United States in ever increasing numbers.

[fols. 5269-5270]. IN UNITED STATES DISTRICT COURT

DEFENDANT'S EXHIBIT 46

President's Office Received February 3, 1959, Answered—

Necchi

Sewing Machine Sales Corp.
164 West 25th Street, New York 1
Watkins 4-7604
February 26, 1959

February 2, 1959.

Mr. Donald Kirchner
President

Singer Manufacturing Company
149 Broadway
New York, N. Y.

Dear Mr. Kirchner:

It was a genuine pleasure to have finally met with you and have had an opportunity to exchange our respective thinking.

It is my understanding, confirmed by our counsel, that the complaint recently filed by your company with the U.S. Tariff Commission does not, directly or indirectly, cover or include our companies, Necchi Sewing Machine Sales Corp. and Elna Sewing Machine Co., Inc., or the Necchi and Elna automatic zig-zag sewing machines and parts thereof in any of the charges or matters contained in the complaint.

In our personal meeting it was so confirmed by you, and it was our mutual feeling that a letter of confirmation should follow.

I am leaving for Europe at the end of this week and your confirmation by return letter would, therefore, be appreciated.

May I again reiterate my sentiments expressed to you in person—should there be any occasion in the future, neither

of us will wait on formalities, but will telephone the other for a personal meeting.

Sincerely yours, Necchi Sewing Machine Sales Corp.,
Leon Jolson.

LJ/gb

[fol. 5271] IN UNITED STATES DISTRICT COURT

Received Patent Department, February 27, 1959,
Answered—

DEFENDANT'S EXHIBIT 48

February 26, 1959.

Mr. Leon Jolson, President
Necchi Sewing Machine Sales Corp.
164 West 25th Street
New York 1, New York

Dear Mr. Jolson:

I wish to thank you for your letter of February 2. It was a real pleasure to meet you and I was glad of the opportunity of having a discussion with you.

As I advised you during our meeting, the complaint filed on January 15, 1959 by Singer with the United States Tariff Commission under Rule 337 at the present time relates only to Singer patent No. 2,832,302. More specifically, this complaint asks the President of the United States to issue an order excluding from entry into the United States all automatic zigzag sewing machines and parts coming within the terms of the claims of Singer patent No. 2,832,302.

It is my understanding that you are currently importing into and selling within the United States Necchi "Supernova" and Elna "Supermatic" zigzag machines. Since neither of these two machines comes within the terms of Singer patent No. 2,832,302, any exclusion order which may

be granted with respect to such patent would not interfere with the importation and sale of your current Necchi "Supernova" and Elna "Supermatic" machines.

Yours very truly, ——, ——, President.

Copy to Mr. M. L. Waterman, Mr. C. F. Bruder, Mr. J. G. Stanford

---

[fol 5272] IN UNITED STATES DISTRICT COURT

DEFENDANT'S EXHIBIT 49

Kane, Dalsimer & Kane
Attorneys at Law
420 Lexington Avenue, New York 17, N. Y.

April 29, 1959.

Branville M. Brumbaugh, Esq.
Braumbaugh, Free, Graves & Donohue
90 Broad Street
New York 4, N. Y.

Dear Brummie:

Re: United States Tariff Commission Proceeding

Our File No. 1070-2

In accordance with our several conversations and in response to the suggestion contained in Joe Colburn's letter of April 13 to Mr. Hemmendinger, I hand you herewith drawings and photographs of the following machines, all of which contain removable cams and which we feel are clearly outside of Gegauf 2,830,302.

1—Aichi Kugyo Co., Ltd.
Model Nos. SZ230; TZ17; TZ10; TZ12; TZ20 & TZ 50

2—Feather Sewing Machine Manufacturing Co., Ltd.
Model No. FSZ-100 and FSZ-110

3—Fuji Precision Machinery Co., Ltd.
Model Nos. RQSZA300-1 and RQSZA300-2

4—Fukusuke Tabi Co., Ltd.
Model No. FZ1
5—Maruzen Sewing Machine Co., Ltd.
Model Nos. 35, 36, 37, 45, 46, 47, 75 and 88
6—Nakajima Sewing Machine Manufacturing Co., Ltd.
Model No. NZ604
7—Nishizawa Super Sewing Machine Co., Ltd.
Model Nos. NH-Z-3; NH-Z-4; NH-Z-5; NH-Z-3b; NH-Z-7; NH-Z-7b; and NH-Z-31

[fol. 5273] We do not have physical samples of any of these machines in our possession but can arrange to have them available if you feel that it is necessary for you to see them. I am afraid, however, that in view of the short time left before the hearing it will probably be impossible to make them available in time to be of any value. We will, however, cooperate to the best of our ability in this regard.

In addition to the foregoing, we also enclose photographs and drawings of the Feather machine model FSZ 120 using a sideface cam, and which we feel is clearly outside of the claims of the Gegauf patent 2,830,302. We do have a model of this machine at our office and will be glad to have it available for you to inspect there at any time convenient to you.

I deeply regret the delay in getting these papers to you, but as I explained on the telephone I have been home ill, and it has been physically impossible to get them ready before today.

Sincerely, David S. Kane.

DSK:lhb

encls.

[fol. 5274] IN UNITED STATES DISTRICT COURT

DEFENDANT'S EXHIBIT 50

April 30, 1959.

David S. Kane, Esq.
Kane, Dalsimer & Kane
420 Lexington Avenue
New York 17, New York

Re: Tariff Commission Proceedings (Our File S-3 F-1)

Dear Dave:

In your letter of April 29, you present material with reference to eight different types of machines allegedly manufactured in Japan for import into this country by the manufacturers you mention. I am glad indeed to simplify the proceedings before the Tariff Commission which will begin on Tuesday next by stating categorically that none of the structures shown in the drawings you have furnished to me is involved in this proceeding.

The foregoing statement is made with the strict understanding that I have not read the textual matter furnished with those drawings and therefore I neither agree nor disagree with anything stated in the accompanying text. It is also understood that I am not expressing any opinion as to what the product of any manufacturer is nor as to what any particular model might comprise. I am only giving the opinion with respect to the precise structure shown in the drawings which you have furnished.

While it would, of course, have been easier to have examined the machines themselves rather than these drawings, I appreciate the limited time now available and your difficulty in producing them and therefore am glad to give [fol. 5275] you the foregoing statement which I am able to do very easily by glancing at these drawings.

You mention Joe Colburn's letter of April 13 to Mr. Hemmendinger and, as I understand it, Mr. Colburn has not received a reply from Mr. Hemmendinger so I am not sure

as to just what Mr. Hemmendinger's position is. In any event, we are glad to simplify matters by furnishing you with this statement.

Sincerely, /s/ Brummie.

bcc to: Mr. Williams, Mr. Colburn.

GMB/hmg

[fols. 5276-5280] IN UNITED STATES DISTRICT COURT

DEFENDANT'S EXHIBIT 51

Washington, D. C., May 13, 1959.

United States Treasury Department
Bureau of Customs
Washington, D. C.

Re: Investigation No. 17, United States Tariff Commission

Household Automatic Zigzag Sewing Machines

Gentlemen:

In connection with the above, please be advised and informed that the undersigned director on behalf of the Singer Manufacturing Company, is authorized to and states that with respect to any Order which may be issued based upon the pending Investigation No. 17 by the United States Tariff Commission with respect to certain household automatic zigzag sewing machines and parts thereof, the following described sewing machines imported by Consolidated Sewing Machine Corp., do not infringe U. S. Patent No. 2,832,302.

> Sewing machines having a cam unit which is stationary during normal sewing operation, which cam unit is formed with a plurality of cam surfaces any one of which surfaces is adapted to cooperate with the cam follower, which, in tracking, reciprocates back and forth over one of said selected cam surfaces for the purpose of transmitting a transverse motion corre-

sponding to said selected cam surface to the needle, as illustrated in the photograph and drawing attached hereto.

Very truly yours, Singer Manufacturing Co., Alvin K. Aurell, Director.

[fol. 5281] IN UNITED STATES DISTRICT COURT

DEFENDANT'S EXHIBIT 52

Received Patent Department, May 19, 1959, Answered—

Brumbaugh, Free, Graves & Donohue
90 Broad Street
New York 4, N. Y.

May 18, 1959.

Frank W. Schattschneider, Esq.
Lamb and Long
Pennsylvania Building
425 13th Street, N. W.
Washington 4, D. C.

Re: Tariff Commission Complaint of Singer Sewing Machine Company

Dear Mr. Schattschneider:

I have your letter of May 11, 1959 enclosing the two instructions booklets distributed by the Rockford Sewing Machine Company, and I note the pages to which you refer. It is not entirely clear and I make the following assumptions. I assume that the only mechanism to move the needle laterally to form zig zag patterns, in each of these machines, is a single cam (replaceable or not) and that the cam follower is thus not adjustable axially on its pivot axis. If the foregoing assumptions are correct, then I am very glad to say that we do not assert that the claims of the Gegauf Patent No. 2,832,302 cover the structure of either of these two machines.

Sincerely, /s/ Granville M. Brumbaugh.

cc: Mr. Chester A. Williams, Jr., J. Bradley Colburn, Esq.

[fols. 5282-5285] IN UNITED STATES DISTRICT COURT

DEFENDANT'S EXHIBIT 53

October 14, 1959.

D. P. Kircher, Esq., President,
The Singer Manufacturing Company,
Singer Building, New York.

Dear Mr. Kircher:

Complaint Under Tariff Act of 1930 (Rule 337) Based Upon Singer-Owned Gegauf Patent No. 2,832,302.

Enclosed is a copy of a Consolidated Sewing Machine Corp. advertisement which is appearing in the current August-September, 1959 issue of "Behind the Scenes". It will be observed that in this ad Consolidated alleges that the three machines featured therein do not infringe Singer's United States patents Nos. Re. 24,370 and 2,832,302. Reissue patent No. Re. 24,370 is our United States Harris patent while No. 2,832,302 is our Gegauf patent and it will be recalled that our present Tariff Action was based upon this Gegauf patent while our civil suit against Brother involves both of these patents.

There is little doubt in our minds but that the three machines featured in the magazine advertisement are clear of any Singer-owned patents for these machines form the subject matter of the Singer-Consolidated agreement consummated during our recent Tariff Action hearings. It would appear that Consolidated has stopped importing into the United States those machines which infringe our several above noted patents. In this connection we have also noted that none of the recent advertisements of Standard Sewing Equipment Corp. have featured the Japanese-made Sanshin machines which they formerly handled and which machines clearly infringe our Gegauf patent.

Yours very truly, The Singer Manufacturing Company, ——, ——, Patent Department.

Enclosure—
advertisement

CC: Mr. M. L. Waterman, Mr. C. P. Bruder.

[fol. 5286] IN UNITED STATES DISTRICT COURT

DEFENDANT'S EXHIBIT 55

August 26, 1958.

M. L. Waterman, Esq., Vice-President,
The Singer Manufacturing Company,
Singer Building, New York.

Dear Mr. Waterman:

I have a copy of Mr. Gegauf's letter of July 25 which you sent to me along with the referral slip asking for my comments on the paragraph concerning the question raised by Mr. Heimann of the Pfaff Company.

Before making any comments I would like to clear up a statement made by Mr. Gegauf in the second paragraph on page 2 of his letter. Mr. Gegauf infers that a patent arrangement has been reached between Singer and Bernina. This implies that we have some type of patent arrangement with the Bernina Company. As you know, this is not true. All we have with Bernina is an agreement whereby the Bernina Company may continue to make a certain type of automatic zigzag stitch sewing machine without fear of suit from Singer, and Singer may continue to make its Class 401 machines without fear of patent infringement suits brought by Bernina. There are no cross-license agreements whatsoever and we have not agreed to anything concerning patents other than not bringing infringement action against Bernina.

After we had spent hundreds of thousands of dollars in developing our Class 401 machine and several millions of dollars in tools, it became apparent the basic United States patent covering the selection of cams as used in the Class 401 machine would be owned by Bernina. It seemed advisable that Singer own the United States Gegauf patent which dominated its new machine and as a consequence we purchased the Gegauf patent from Bernina and gave a nonexclusive license back to Bernina.

I only wanted to point out these facts to make it clear to you that in my opinion we have dealt at arm's length with Bernina and Mr. Gegauf. To agree with Pfaff, Bernina

and possibly other sewing machine manufacturing companies that we would take any concerted action or favor one or more of any group would in my opinion be unwise and contrary to the Singer policy heretofore rigidly adhered to of not working in concert with one competitor against any other competitor.

[fol. 5287] My recommendation is that you simply acknowledge Mr. Gegauf's letter and say that we will inform him as to the final decision handed down by the Court in our suit against Brother.

Yours very truly, The Singer Manufacturing Company, ——, ——, Patent Department.

In triplicate

[fol. 5288] IN UNITED STATES DISTRICT COURT

DEFENDANT'S EXHIBIT 56

December 31, 1958.

L. Adamson, Esq.,
Frankfurt, Germany.

Dear Mr. Adamson:

German Patent Application of Fritz Gegauf No. G 11,654, Class Cl. 52 a, 9/02.

We have received your letter of December 15, 1958, Ga/Ma., submitting to us a list of publications appearing in the Patentblatt issues Nos. 47, 48 and 49/1958.

Page four of your letter contains a notation that the above identified Gegauf German application had been withdrawn and that the effects of a provisional protection are considered as not having taken place.

You may recall that Singer is licensed under this Gegauf German application and is the owner of United States patent No. 2,832,302 which corresponds to this German application.

In view of this situation we would be pleased if you could determine the exact status of this German application and why it was withdrawn. We presume that in view of the

withdrawal of this application there is no possibility of having a German patent ultimately issue therefor.

Any information which you can furnish us relative to the present and future status of this application will be greatly appreciated.

Yours very truly, The Singer Manufacturing Company, ——, ——, Patent Department.

CC: Messrs. Cruikshank & Fairweather, Mr. M. L. Waterman.

[fol. 5289] IN UNITED STATES DISTRICT COURT

DEFENDANT'S EXHIBIT 57

Received M. L. W., March 9, 1959, Answered—

Fritz Gegauf
Steckborn/Schweiz

Inhaber der
Bernina-Nähmaschinenfabrick

March 6th, 1959.

Mr. M. L. Waterman
149 Broadway
New York 6, N. Y.

Dear Mr. Waterman:

Being in possession of a full documentation of the Complaint of the Singer Manufacturing Company, I would like to wish you the best of success for this petition of 64 pages.

When studying the complaint, I noticed that you contemplate to grant a licence under the patent 2,832,302 to Sears, Roebuck and Company of Chicago, Illinois, for importation into the United States of an automatic zigzag machine manufactured in Western Germany by Gritzner-Kayser A. G. in Durlach.

Owing to the fact that your complaint is mainly based on the Bernina Patent we ceded to you, I take the liberty to kindly ask you why you will be granting a licence for the automatic zigzag machine of Gritzner-Kayser. The Sears,

Roebuck and Company might, if occasion arises, include in their sales programme the Bernina sewing machine instead of the Gritzner-Kayser.

I would be pleased to hear from you in such matter.

With kind regards, I remain,

yours truly, Fritz Gegauf, senior.

Copy to J. G. Stanford.

[fol. 5290] IN UNITED STATES DISTRICT COURT

DEFENDANT'S EXHIBIT 58

Department of Commerce
United States Patent Office
Washington

Michael S. Striker
511 Fifth Avenue
New York 17, New York

Applicant: Arnaldo Vigorelli
Ser. No. 393,760
Filed: Nov. 23, 1953

For: Embroidery Stitching Sewing Machine

Jan. 19, 1956.

Please find below a communication from the Examiner in charge of this application.

Robert C. Watson, Commissioner of Patents.

The following claim found allowable, is suggested for the purpose of interference. Applicant should make same by February 24, 1956 under the provisions of Rule 203. In making this claim applicant is required to overcome the filing date (Rule 131) of the Harris patent, of record, which shows the construction set forth in the claim; failure to do so will be considered a disclaimer of the subject matter involved:

> A sewing machine comprising, a frame, a needle pivotally carried by said frame and mounted for endwise reciprocation and for lateral swinging movements,

a rotary shaft mounted in said frame for reciprocating said needle, means for rotating said shaft, a series of rotary cams carried by said frame and mounted about a common axis, means connected with said shaft for rotating said cams about said common axis, a cam follower mounted in said frame having a single cam-engaging head for engaging and responding to the surface of a cam of said series, means enabling a selected cam to be engaged by said cam-engaging head, said series of cams and said single cam-engaging head being relatively shiftable lengthwise of the common cam axis thereby to effect a complete traverse of said series of rotary cams, means normally urging said cam-engaging head into engagement with said selected cam surface, means engageable with said cam follower for withdrawing said cam-engaging head from said selected cam surface, and a pitman having one end connected with said needle at a point spaced from the pivot and its other end operatively connected with said cam follower thereby to impart lateral swinging movement to said needle in response to the surface of said selected cam.

[fol. 5291] The time limit for making the claim expires February 24, 1956.

The statutory period of response to the last Office action will expire six months from the date thereof.

——, ——, Examiner.

/Franklin/ud

[fol. 5292] IN UNITED STATES DISTRICT COURT

DEFENDANT'S EXHIBIT 59

Received Patent Department February 16, 1956,
Answered—

Michael S. Striker
Patents and Trade Marks
511 Fifth Avenue
New York
Murray Hill ——

[name illegible]

Via Air Mail

January 23, 1956.

Cicogna Franco & C.
Via Visconti Modrene 16-18
Milano, Italy

Gentlemen:

Re. U. S. Patent Application, Serial No. 393,760, Embroidery Stitching Sewing Machine, Arnaldo Vigorelli. Your ref: Ann/

This is to inform you that the enclosed Office Action has been received in the above-entitled case.

A term is set to expire on February 24, 1956, and in the event that the claim proposed by the Examiner in the Office Action is not made within the term, the subject matter of this claim will be considered disclaimed.

Please note that claims 23 and 25 of the present application were rejected on the Harris reference in the Office Action dated September 23, 1955.

The Examiner requires the inventor to overcome the filing date of the Harris patent. This patent was filed on June 9, 1952, that is prior to the filing date of the corresponding foreign applications which, according to the oath, were filed in Italy on January 28, 1953 and on September 29, 1953, and in Argentina on May 13, 1953.

Consequently, we cannot rely on the filing dates of the corresponding foreign applications, and the only way to overcome the filing date of the Harris patent is to prove that the invention, as set forth in the proposed claim, was introduced into the United States prior to the filing date of the Harris patent, that is prior to June 9, 1952.

[fols. 5293-5295] If you have proof of such prior introduction into the United States, which may have been in the form of a machine delivered to the United States, or any other disclosure in the United States, please inform me immediately by air mail of the facts involved, and I will prepare a suitable affidavit to the statements set forth in your reply and mail it to you so that the inventor may sign it.

Please note that such affidavit and an amendment submitting the proposed claim must be filed at the Patent Office before:

February 24, 1956

so that it is necessary that the correspondence is carried out by air mail and without any delay so that a response can be made before the expiration of the term since otherwise the subject matter of the proposed claim would be considered disclaimed.

Very truly yours, Michael S. Striker.

MSS:WCG
Encl.

SUPREME COURT OF THE UNITED STATES

OCTOBER TERM, 1962

No. 438

UNITED STATES, APPELLANT,

vs.

THE SINGER MANUFACTURING COMPANY

APPEAL FROM THE UNITED STATES DISTRICT COURT FOR THE SOUTHERN DISTRICT OF NEW YORK

Volume III

INDEX*

	Original	Print
Record from the United States District Court for the Southern District of New York—Continued		
DEFENDANT'S EXHIBITS—Continued		
61—Letter from H. J. Stelzer, Sears, Roebuck and Co., to Mr. C. F. Bruder, dated October 15, 1958	5296	1451
62. Letter from Singer Sewing Machine Co., Vice President to Mr. H. J. Stelzer, Sears Roebuck & Co., dated November 13, 1958	5297	1452

---

* Several exhibits bear two different exhibit numbers. In every such instance the exhibit was originally an exhibit to the Agreed Statement of Facts and bore an exhibit number preceded by the letter S, such as S-1, S-2, S-3, et cetera. Notwithstanding the fact that they bore "S" exhibit numbers, at times some were introduced in evidence with plaintiff's exhibit number and in two instances with a defendant's exhibit number. "S" exhibits bearing a Government exhibit number have been designated by the Government by the latter number, with the "S" exhibit number in parentheses, for example, "Govt. 2 (S-1)".

For complete list of "S Exhibits" see Index, page xxv.

	Original	Print
Record from the United States District Court for the Southern District of New York—Continued		
DEFENDANT'S EXHIBITS—Continued		
63—Letter from H. J. Stelzer, Sears Roebuck & Co. to Mr. C. F. Bruder, dated November 21, 1958	5298	1453
64—Letter from H. J. Stelzer, Sears, Roebuck & Co. to Mr. C. F. Bruder, dated January 8, 1960	5299	1454
66—Letter from M. L. Waterman to M. C. Lightner, dated April 26, 1957	5304	1455
67—Memorandum from M. L. Waterman to Mr. D. P. Kircher, dated November 25, 1959	5306	1457
71—Memorandum from E. Herbst to Mr. M. L. Waterman, dated November 10, 1959 re "Evaluation of Vigorelli Machines"	5317	1460
76—Memorandum from D. G. Robbins to Mr. M. L. Waterman, dated December 28, 1958 re "Vigorelli Embroidery Machine", (excerpts)	5335	1464
77—Letter from Vice President to Mr. Arnaldo Vigorelli, Pavia, Italy, dated January 18, 1960	5337	1465
78—Cablegram from Waterman to Singer for Lightner, dated November 17, 1955	5338	1467
79—Letter from JBS to "Dear Colleagues", dated 5 9 (1956) (excerpts)	5339	1467
80—Letter from Patent Department, Singer Mfg. Co. to Dr. S. Lando, dated May 22, 1956	5343	1468
81—Letter from Italy Singer to J. G. Stanford, dated May 24, 1956	5351	1474
82—Letter from Ing. Barzano & Zanardo to the attention of Dr. Lando, dated May 23, 1956	5352	1475
84—Letter from Ing. Barzano & Zanardo to Dr. Lando, dated June 7, 1956	5354	1477
85—Letter from L. Adamson to Mr. J. G. Stanford, dated June 15, 1956	5359	1482
86—Letter from Patent Department, Singer Mfg. Co. to L. Adamson, dated June 27, 1956	5361	1484
87—Letter from Patent Department, Singer Mfg. Co. to M. L. Waterman, dated July 10, 1956	5363	1486
89—Letter from M. L. Waterman to L. Adamson, Frankfurt, Germany, dated August 8, 1956 (excerpts)	5365	1487
90—Letter from H. A. Toulmin, Jr. to Singer Mfg. Co., dated March 1, 1957 re "Agreement—Singer Mfg. Co.-Messerschmitt"	5368	1489
"Agreement between Singer Mfg. Co. and Messerschmitt, dated February 11, 1957	5369	1490

Record from the United States District Court for the Southern District of New York Continued	Original	Print
DEFENDANT'S EXHIBITS—Continued		
91—Letter from Patent Department, Singer Mfg. Co. to Toulmin & Toulmin, dated March 8, 1957	5371	1492
92—Letter from Dr. E. Wiegand to Dr. Stanford, dated May 14, 1957 re "Singer-Messerschmitt Patent Agreement, U.S. Serial No. 548,481	5373	1493
93—Transmittal letter from Dr. E. Wiegand to Mr. Stanford, dated May 16, 1957 re "Singer-Messerschmitt Patent Agreement", U.S. Serial No. 548,481	5376	1496
Incomplete copy of Agreement between Singer Mfg. Co. and Messerschmitt	5377	1496
Translation of Memorandum of conference between Fuchshuber, Busselmeier & Wiegand, dated May 10, 1957	5379	1498
Draft for new document (Agreement)	5382	1499
94—Letter from Dr. E. Wiegand to Mr. Stanford, dated May 14, 1957	5384	1501
95—Translation of memorandum of conference at Frankfurt Main on October 14, 1957 between Waterman, Stanford, Busselmeier, Kruger and Niemann	5386	1502
96 Undated agreement between The Singer Mfg. Co. and Messerschmitt.	5395	1508
97—Letter from L. Adamson to J. G. Stanford, dated January 30, 1958 re: Agreement between Messerschmitt A.G. and Singer Mfg. Co. (Foreign Patents)	5404	1513
114B—Instruction book for the Borletti 1102 Super-de-luxe automatic (excerpts)	5405	1517
119—Patent Notice employed by Singer on Its Machine Commencing with the Year 1958	5468	1525
124—Defendant's motion for stay filed in United States District Court for the Southern District of New York in the case of The Singer Manufacturing Company v. Brother International Corp., C.A. No. 133-350 (excerpts)	5500	1525
Exhibit A—Tariff Commission postpones decision in Sewing Machines Investigation	5509	1526
127—Letter from T. Krzyzaniak, Singer Mfg. Co. to J. G. Stanford, dated August 13, 1959	5538	1528
128—Letter from Patent Department, Singer Mfg. Co. to M. L. Waterman, dated August 20, 1959	5539	1529
129—Letter to J. G. Stanford, dated June 22, 1955	5540	1530

	Original	Print
Record from the United States District Court for the Southern District of New York—Continued		
DEFENDANT'S EXHIBITS—Continued		
130—Letter from Patent Department, Singer Mfg. Co. to Mr. Charles D. Reed, Brazil, dated November 28, 1956 (excerpts)	5541	1531
131—Letter from Charles A. Williams, Attorney for Messerschmitt to U.S. Patent Office re Serial 548,481	5545	1532
132—Letter to J. G. Stanford from U.S. Patent Office re Serial 548,481	5546	1533
133—Statement showing provisions of Singer-Vigorelli License Agreement, Singer-Gegauf License Agreement and Singer-Messerschmitt License Agreement	5547	1535
134—Statement showing Singer Patents and Singer Machines Covered	5548	1537
135—Statement showing Date of License Agreements, Assignments and Conferences	5549	1538
136—Comparison statement showing Mechanical Elements of Gegauf, Patent No. 2,832,302 as described in Claim 1 and Mechanical Elements of Harris Reissue Patent Application Serial No. 516,058 as described in Claim 22	5550	1539
137—Comparison statement showing Mechanical Elements of Gegauf, Patent No. 2,832,302 as described in Claim 1, Mechanical Elements of Harris Patent No. Re 24,370 as described in Claim 5, Mechanical Elements of Harris Patent No. Re 24,370 as described in Claim 6 and Mechanical Elements of Harris Patent No. Re 24,370 as described in Claim 7	5551	1540
138—Note stating "Gegauf wants a million marks for his patent, etc" marked Sunday	5552	1541
146B—Photograph captioned "Here's a feature-by-feature comparison of the fully automatic Necchi and a leading competitive semi-automatic machine	5553	1543
151—Singer Stitch Pattern Comparison Chart 401 and 403 Machines	5555	1544
152—Advertisement of Singer Sewing Centers showing Slant-Needle Singer to do zigzag stitching automatically appearing in 4 magazines for April 1957	5556	1545
153—Statement showing Dollar Amount of Advertising Expenditures for Defendant's Class 404, 403, and 401 Household Sewing Machines During the Period 1957 through 1960	5557	1547
154—Advertisement for Singer Sewing Centers for Singer Slant-O-Matic appearing in 6 magazines for Fall, 1957	5558	1549

	Original	Print
Record from the United States District Court for the Southern District of New York (Continued		
Defendant's Exhibits—Continued		
155—Advertisement for Singer Sewing Centers presenting the Singer Slant-O-Matic appearing in 5 magazines for February 1958	5559	1550
156—Advertisement for Singer Sewing Centers captioned "A present with a future—if it's a Singer" appearing in 9 magazines for December 1957	5560	1551
157—Advertisment for Singer Sewing Centers captioned "What is Zig-Zag Sewing?" appearing in 15 magazines for Fall 1960	5561	1552
158—Advertisement for Singer Sewing Centers captioned "What's the newest slant on holiday sewing?" appearing in 11 magazines for Autumn-Winter 1960	5562	1553
159—Statement showing Comparative Sales of All Singer Household Sewing Machines for the Years 1958-1960	5563	1555
160—Graphic presentations of Comparative Sales of the Singer 401, 403 and 404 Sewing Machines and Their Predecessors for the years 1958-1960	5564	1557
161—Graphic presentations of Comparison of Sales with Advertising Expenditures of the Singer 401, 403 and 404 Sewing Machines and Their Predecessors for the years 1958-1960	5565	1558
162—Graphic presentations of Comparative Sales of All Singer Household Sewing Machines for the years 1958-1960	5566	1559
163—Statement showing Comparison of Sales with Advertising Expenditures of the Singer 401, 403 and 404 Sewing Machines and Their Predecessors for the years 1958-1960	5567	1561
164—Advertisement for Singer Sewing Center captioned "Yours for 3 Whole Days" featuring the Slant-O-Matic	5568	1563
168—Chart captioned "COMPARE" These important features of the Singer Slant-O-Matic with machines from 4 other sources	5574	1564
169—Pamphlet, Shop Meeting Guide, entitled "Selling Singer Superiority"	5575	1565
170—White Sewing Machine Corporation Annual Report for Year ending December 31, 1957 (excerpts)	5579	1569
172—Statement showing Production and Sales in the United States of Singer Household Sewing Machines for the years 1947 through 1959	5599	1570

	Original	Print
Record from the United States District Court for the Southern District of New York—Continued		
DEFENDANT'S EXHIBITS—Continued		
173—Paragraph 150 of the Statement of Facts captioned "Exhibits S-432 to S-500 are true copies of genuine original advertisements which respectively appeared in the mail order catalog listed below, etc.	5601	1571
S-Exhibits annexed to Defendant's 173:		
S-433—Advertisement of Signature Sewing Machines appearing in Wards catalog, Fall-Winter 1960	5605	1573
S-452 & S-453—Advertisements of various models of Kenmore Sewing Machines appearing in Sears Catalog, Spring-Summer 1960	5624	1574
S-474—Advertisement of various models of Vogue Sewing Machine and Necchi appearing in Spiegel Catalog, Fall-Winter 1960	5648	1576
S-486—Advertisement of various models of Aldens Sewing Machine appearing in Aldens Catalog, Fall-Winter 1960	5658	1577
175—Graphic presentations of Japanese Sewing Machines Imported into United States for years 1957, 1958 and 1959	5675	1578
184—Statement showing Imports into the United States of Singer Household Sewing Machines Valued Over $10 for the years 1947 through 1959	5743	1579
185 and 186—Statements of "United States Imports of Sewing Machines for Consumption, Calendar Years 1947 through 1959 and 1948 through 1960" prepared by U.S. Department of Commerce, Bureau of the Census	5745	1581-82
187—Table 6A—Quantity Value of Products Shipped by All Manufacturing Establishments for the United States: 1954 and 1947 from Manufactures Industry Statistics	5748	1583
188—Table of "Production and Quantity and Value of Products Shipped by All Manufacturing Establishments for the United States, 1958, dated June 12, 1961, prepared by Department of Commerce, Bureau of the Census.	5750	1585
189—Statement showing Units and % of Total Japanese Imports for the Years 1957, 1958 and 1959 for various models of sewing machines	5751	1586

Record from the United States District Court for the Southern District of New York—Continued

	Original	Print
DEFENDANT'S EXHIBITS—Continued		
191—Graphic presentation of Comparison of U.S. Singer Production and Imports to Japanese, European & Other Non-Singer Imports & Other Non-Singer U.S. Production of Household Sewing Machines for the Years 1947-59	5753	1587
192—Graphic presentations of Comparison of U.S. Singer Production & Imports to Japanese, European & Other Non-Singer Imports & Other Non-Singer U.S. Production of Household Sewing Machines for the years 1947-59	5755	1588
194—Article entitled "Brother Markets Unit It Calls Housewife Engineered," from publication, Behind The Scenes, November 1958	5756	1589
195 and 197—Advertisements of Brother Sewing Machines showing various models	5757	1591-92
199—Paragraph 34 entitled "Radial Cam Layout Distortion" with diagrams	5764	1593
200—Statement of "Manufacture and Assembly of 401 Machine Cams"	5765	1594
S EXHIBITS		
S-11—Complaint of the Singer Manufacturing Company, filed before the U.S. Tariff Commission	2479	1596
S-17—Statement captioned "During the period from January 1957 to December 1959, the following U.S. companies have engaged in importing, assembling and or distributing machine-carried multiple cam, replaceable cam, and or manual zigzag sewing machines manufactured in Japan by the manufacturers listed	2574	1618
S-18—Statement showing names of Japanese manufacturers exporting zigzag sewing machines to United States and model names	2575	1619
S-20—Statement captioned "During the period from January 1957 to December 1959, the following U.S. companies have engaged in importing, assembling and or distributing machine-carried multiple cam, replaceable cam, and or manual zigzag sewing machines manufactured in Europe by the manufacturers listed	2580	1621
S-21—Statement showing names of European manufacturers exporting zigzag sewing machines to United States and model names	2581	1622

Record from the United States District Court for the Southern District of New York—Continued

	Original	Print
S Exhibits—Continued		
S-31, S-32, S-33, S-34—Excerpts from "Machinery Exports Section, Heavy Industry Bureau, Ministry of International Trade & Industry" giving Lists of Approved Exports of Family Sewing Machines and Destinations for the years 1957, 1958, 1959 and 1960	2591	1623
S-39—Advertisement for Free Westinghouse Sewing Machine captioned "If You're Not Selling this Machine You're Working Too Hard."	2598	1627
S-43—Advertisement for various models of Fleetwood Sewing Machine	2602	1628
S-61—Advertisement for Borletti—New Home Sewing Machine Company	2622	1630
S-72—Advertisement for various models of Brother Sewing Machine from publication, Behind The Scenes, March 1960	2633	1631
S-87, S-88, S-89, S-90, S-91, S-92—Lists for Multiple Cam, Replaceable Cam and Manual showing Model Name, Retailer, Initial Price at Which Store Willing To Sell & Single Price Specified by Store	2676	1633
Plaintiff's proposed findings of fact and conclusions of law (excerpts)	6217	1647
Plaintiff's memorandum relative to defendant's proposed findings (excerpts)	6319	1650
Plaintiff's post trial brief (excerpts)	6358	1652
Amended and corrected opinion, Ryan, J., dated May 11, 1962	6759	1653
Judgment	6840	1715
Notice of appeal to the Supreme Court of the United States	6842	1719
Orders extending time in which to docket case	6920	1721
Order noting probable jurisdiction	6923	1723

[fol. 5296] IN UNITED STATES DISTRICT COURT

DEFENDANT'S EXHIBIT 61

Received Patent Department October 20, 1958, Answered

Sears, Roebuck and Co.
925 South Homan Avenue
Chicago 7, Illinois

October 15, 1958

Mr. C. F. Bruder,
Singer Sewing Machine Co.
149 Broadway
New York 6, New York

Dear Charlie:

Regarding various patent items, attached is a copy of a letter from Frank Marks dated October 1 which he suggests we pass on to you for your review.

Regarding the data on divisional patents left with me during your last visit, Frank Marks has indicated that some of the claims did not read on the Gegauf patent and therefore seemed to be a continuing patent application rather than a divisional application. These claims call for structure not shown in the original patent. New matter is added. All we have on these structures is the language of the claim which is extremely difficult to completely understand without drawings.

Therefore, if possible, we would appreciate a complete set of patent drawings referred to in the data supplied and apparently in line for patent so that we can become more familiar with the application and tie the terminology into your intentions for proper appraisal.

Kindest regards,

Yours very truly, Sears, Roebuck and Co., H. J. Stelzer, Department 620.

HJS:sp

[fol. 5297.] IN UNITED STATES DISTRICT COURT

DEFENDANT'S EXHIBIT 62

November 13, 1958.

(Air Mail)

Mr. H. J. Stelzer,
Department 620,
Sears, Roebuck & Company,
925 8th. Homan Avenue,
Chicago 7, Illinois.

Dear Harold:

Pursuant to your letter of October 15th and Frank Marks' memorandum of October 31st, I am attaching, in duplicate, a memorandum from our Patent Department dated November 12th.

As we agreed on the telephone this morning, there are advantages to both companies in getting this matter settled promptly. If Frank Marks can agree with the position taken by our Patent Department with respect to the situation in the United States, but still has reservations with regard to the Canadian Harris patent, then I suggest that we conclude an agreement that pertains to the United State only. The Canadian situation could then be dealt with separately later in an amicable fashion, I am sure.

I shall look forward to hearing from you after you have had an opportunity of reviewing this material.

Cordially, Singer Sewing Machine Company, By ——, ——, Vice-President.

Enclosure.

Copy to Mr. J. G. Stanford.

[fol. 5298] IN UNITED STATES DISTRICT COURT

DEFENDANT'S EXHIBIT 63

Sears, Roebuck and Co.
925 South Homan Avenue
Chicago 7, Illinois

November 21, 1958.

Mr. C. F. Bruder
Singer Sewing Machine Co.
149 Broadway
New York, N. Y.

Dear Charlie:

As I anticipated, we have encountered sharp differences of opinion between your legal counsel and ours in regard to the Gegauf patents reading on our #89 German made automatic machine. Following is a pick-up of Frank Marks' recent conclusions:

"In our opinion a license covering the Gritzner Model 89 machine is warranted so far as your operations in the United States are concerned. Although we differ with Singer's Patent Counsel as to infringement of the issued Gegauf patent No. 2,832,302, we feel that the machine will probably be covered by the forthcoming Gegauf patent. An important consideration is thus raised as to when unit royalty payments should begin. According to our view they are not warranted now and will be justified only upon the issue of the pending patent with infringed claims. However, the situation is entirely different in Canada, inasmuch as we do not consider Harris Patent No. 552,072 infringed by said machine. Hence, we do not feel that any license or royalty payments are justified on Canadian business. It is suggested, in connection with your negotiations for a license from Singer, that you bear in mind the remarks of our letter to you dated October 1, 1958."

You remember that on October 15 I sent you a copy of Mr. Marks' letter of October 1. As I indicated to you over

this phone last week in light of the above circumstances I believe it would be well for your lawyers and ours to get together for another discussion and settlement just as soon as convenient for you.

Yours very truly, Sears, Roebuck and Co., H. J. Stelzer, Department 620.

HJS:sp
cc: E. Cogley.

[fols. 5290-5303] IN UNITED STATES DISTRICT COURT

DEFENDANT'S EXHIBIT 64

Received Patent Department, January 12, 1960, Answered

Sears Roebuck and Co.
925 South Homan Avenue
Chicago 7, Illinois

January 8, 1960.

Mr. C. F. Bruder
Singer Sewing Machine Co.
149 Broadway
New York, New York

Dear Charlie:

This letter has no immediate importance. Merely one of information for possibly in the future.

As you may recall, in the first samples of our 89 zig zag head we used a single cam follower. With the knowledge that this might infringe the Gegauf patent Gritzner Kayser went to a multiple cam follower with a single selector. Based on your divisional patents this also apparently infringed and therefore it was necessary for us to obtain the present license agreement with you.

Since we are under the license arrangement there does not seem to be any good logical reason why we should not return to the original design in essence of a single cam follower which might thereby reduce any service problems or costs which might result from service in this area of the machine. We are therefore proceeding with Gritzner

Kayser to obtain a revised sample incorporating this simpler mechanism. After clearance from our laboratory, which is several weeks away, we will again contact you.

As we see it, in its simplest form we need only have a letter covering this slight modification in our agreement since only a model number change would be involved. We do not anticipate any change in appearance so therefore only you and ourselves would know of the modification.

Yours very truly, Sears, Soebuck and Co., H. J. Stelzer, Department 620.

HJS:sp

cc: E. A. Cogley

[fol. 5304] IN UNITED STATES DISTRICT COURT

DEFENDANT'S EXHIBIT 66

President's Office Received April 29, 1957 Answered

M. L. Waterman
at Via Dante, 18
Milan, Italy

Milan, April 26, 1957.

M. C. Lightner, Esq., 149 Broadway New York 6, N.Y.

Dear Mr. Lightner:

Mr. Stanford and I visited Mr. Vigorelli at Pavia yesterday. Mr. Bandiera and Dr. Lando accompanied us. We were most cordially received. Because of Vigorelli's financial situation and I must admit too everything for the moment, I was most careful that nothing said would be interpreted by him as in any way seeming to be taking advantage of him. He has trimmed his expenses so that he is hopeful he can carry on. His force has been reduced and he is shipping each month 400 machines more than he is building. In some period over a year he will have reduced his inventory and secured funds therefrom to assist further his recovery—he hopes.

We saw the machine that made the samples seen by you and others in New York. It is quite in accordance, in principle, with the patent drawings. It is most impractical as designed, to consider as a machine for domestic usage, and this fact is recognized by Vigorelli. So much so that a second machine is being designed. It is not yet completed and will not be for several months, in my opinion. It differs in some important constructional details and in principle although accomplishing the same end.

There are in effect two cams under the bed, made in a micarta or other similar cam blank - at least 5" in diameter and perhaps 7 16" thickness. Every design would mean a separate cam change in the same way we change our small cam on the face of the 319 machine. Think of the bulk of say 6 or 12 cams of this size in any accessory box. Quite impractical. And the method of arriving at the sewing result, so well commented on, is of a manufacturing machine design, rather than suitable for family machines. The second machine being designed will be a most complicated one -approaching Pfaff machine that caused so much trouble to that company for the last two years. Consider moving a throat plate from side to side and the feed dog not only like-wise with it, but forward and reverse, and the needle in conventional manner from side to side. These things can be done but present many problems.

Patent-wise, what I have just described is probably, if done in toto, new. To do certain of the movements is not new. I think we could build into the 401 and 319 a way to make scallops— and probably of varying lengths and widths perhaps not to the extreme width of the Vigorelli samples [fol. 5305] and without running into Vigorelli's patent. I see no way to arrive easily at the few effects that require reverse feeding means, not because of patents Vigorelli's or otherwise, but because of added complications.

You will see therefore that I am quite doubtful we would ever want to use the principle of the present Vigorelli machines as disclosed in the patent drawings.

It was left this way. When his machine is re-designed, he will let us know and we can study it again. He will not disclose it to any others. I feel pretty sure, if we should be interested in it then or the more comprehensive studies which we will carry on simultaneously with his re-designing

show any reason why we should interest ourselves aggressively in the machine or the patents, we will have the opportunity of doing so, and at no greater cost than now. In fact he does not know now in his state of confusion what he will do with the machine or the patent. He is not prepared to say. He does not want to dispose of the idea entirely.

I tossed out the idea that when his second machine was completed it might be we would be interested to the extent of reimbursing him for some of his development and patent expenses with equal rights with him under the patents or it might be of even securing all the rights if he did not care to go ahead himself further. He was not unreceptive to the idea, understanding fully that as far as we are concerned this would, of course, depend upon the machine itself and our investigations. I am sure he would like to recoup some of his costs.

I think the foregoing summarizes our conclusions regarding the machine, and our talk with Mr. Vigorelli.

We shall proceed to Zurich Sunday—Mr. Stanford and I to Paris Tuesday night—Mr. Graesser flying from Zurich back to Clydebank Tuesday and on the following Monday I shall probably rejoin Graesser in London and go to Street where one of London's most important customers wants to see me about his ideas on automation.

Very sincerely, M. L. Waterman.

MLW:bw

[fol. 5306] In United States District Court

Defendant's Exhibit 67

November 25, 1959.

Memorandum to: Mr. D. P. Kircher

Vigorelli Embroidery Machine

Comments and evaluations on the machine submitted by Vigorelli were made by nine persons. These were: Messrs. Johnson, Heglst, Patrick and Zylbert, who are the most experienced of our people on domestic machines; by Mr. Gebhardt, who though not experienced chiefly on domestic

machines has a very considerable knowledge of industrial machine requirements and is, nevertheless, competent to comment upon a machine of the nature of this one; by a Mr. Weisz of Bridgeport, whom I consider not as competent to comment on this type of machine as the others but, nevertheless, knowledgeable with respect to machines in general; by Mr. Krzyzaniak, who is familiar with the features and design of all of the competitive domestic zig-zag machines but who is not an engineer or with mechanical knowledge; and by Miss Hutton, who has commented in her normal manner, as she does with respect to any new and competitive machine which we may wish to have her remark upon.

Each one was asked to comment upon the positive and negative features as concerns the sales features, the technical (design) and performance characteristics, the relative complexity of this machine as compared with other zigzag type machines, the problems of servicing, and any other general comments that might be made.

It will be noted that there are some statements that are at variance—as, for instance, one will remark that the machine appears rather complex, and another will see reasons why it is probably not more complex than are corresponding competitive machines.

If I were to comment in a general way, I would agree that the machine is certainly not as good from the viewpoint of stitching as a Singer machine is required to be, but this results from the fact that Vigorelli does not know Singer stitching requirements (nor does any other competitor seem to be aware of what we consider required stitching.) Without any question, a very considerable improvement in the stitching could be brought about if our own people were to work on this problem. I am not sure myself that the machine would cost much more to build than does the 401. Outstanding features of the machine are: [fols. 5307-5316]

a). the ability to make stitching designs that are, as Miss Hutton expresses it, "bold decorative patterns" and to do automatic monogramming;

b). the ability to lengthen out any design, such as a scallop, which is a feature of some of the competitive machines and which has been mentioned in the past many times as being desirable;

c). the ability to make buttonholes without turning the work;

d). the fact that the shuttle mechanism is of the non-thread jamming design, a feature that has been mentioned many times, as being very desirable;

e). the ability to make designs which require a reversal of the feed. This has also been a feature mentioned many times and is included in many of the more well-known competitive machines;

f). a two-speed motor, which enables an inexperienced operator to do free embroidery work more easily.

While there are other features that are commented upon, the fore-going are the most important.

Generally speaking, there is evidence in each person's remarks of the fact that the features of this machine are very worthwhile from the sales viewpoint.

M. L. Waterman.

Attachments

Copy to: M. C. Lightner (w reports) 12 30 59
Copy to: J. G. Stanford (w reports) 12 1 59
Copy to: D. G. Robbins (w reports) }
C. F. Bruder (w reports) } 12 22 59
A. K. Aurill (w reports) }
Copy to: A. J. Pettit (w reports) 12 28 59

[fol. 5317] In United States District Court

Defendant's Exhibit 71

The Singer Manufacturing Co.
Singer Building
149 Broadway
New York 6, N. Y.

Division of Research

In Replying please refer to EH:V18

November 10, 1959.

Memorandum to: Mr. M. L. Waterman

Evaluation of Vigorelli Machines (by E. Herbst)

I. Sales Features

A. Positive

1. The writer can't help but be impressed by the decorative capabilities of this machine. It's the type of design that could be put to maximum use by the artisan. With many improvements, this design would be especially popular in Europe and have sales appeal for a significant percentage of American women who want to go beyond the decorative performance of the 401 machine. As Miss Hutton has pointed out to the writer, there is a percentage of American women who make their clothes to be distinctive. This limited market would be attracted by a machine of this type design.

2. The buttonholing capabilities of the machine would be a sales feature that could be promoted. —Currently the cam of the machine is not designed properly and this area would have to be studied to develop a design which (a) would enable the operator to start at any point and (b) would have instructive devices which would be a great deal simpler to follow.

B. Negative Sales Features

1. Complexity of Controls
The average housewife would have difficulty in readily mastering the use of the controls. This condition could be greatly improved by making some of the controls different in the manner they are actuated. For example, the controls for engaging the followers on the feed and zig-[fol. 5318] zag cams could be push button type. The feed control and the slide control could possibly be combined into one. (Initial turning of knob would engage feed follower and latter turning would graduate throw of slide.) Part of the latitude of decorative stitching would be lost, however, unless compensated with more cams.

2. Hook and Bobbin Case
The bobbin case can readily fall out of the cradle which hinges it into position in the hook. If the bobbin case is not positioned properly, the cradle is subject to damage. Possible corrective designs for this condition would be:
(1) use 401 Hook which would necessitate opening throat plate slot up an additional .006".
(2) Use 306 Hook with slant needle to give as much accessibility to bobbin case as possible.
The use of a special needle with a scarf to satisfy loop seizure is undesirable.

3. Base Design
The leaf to the left of the operator and the compartments for cam storage are attractive. However, the machine is too far from the operator and the required removal of the machine from base for storage is unacceptable.

II. Technical (Design) and Performance Characteristics

A. Positive Characteristics

1. The writer likes the use of the heart shaped cam for plain zigzaging as distinguished from a

multi-peaked cam we now use on the 401 Machine. Variations between peaks can show up in satin stitching. This has been a serious problem on the 403 Machine and has occurred in instances on "wild" 401 Machines.—The heart shaped cam construction permits a pendulum timing on the machine where there is no danger of the needle moving while it is in the material.

2. The use of 4 amplitude control devices of similar or same construction is good designing.

[fol. 5319] 3. The heart shaped cam design also permits more common parts between the plain stitching zigzag machine and the fully automatic zigzag machine.

B. Negative Characteristics

1. Construction of Slide Mechanism

This is an area that should be studied very carefully. Current construction requires slide plate to be perfectly flat—4 point landing is recommended instead. The utilization of Belleville washers for spring loading (vertically) is unacceptable. This construction would be improved by utilizing compression springs (with washers) in place of the Belleville washers for better spring action. (In case of Belleville washer use on feed regulator we have gone to compression spring.) Vigorelli indicated that the slide is positioned in the ways (on the bed) by the shoulders on the retaining screw running in the two slots. However, this construction on the machine isn't in evidence. It appears as though the ways position the slide in the bed requiring a good fit in manufacture. The latter construction is undesirable while the former is more acceptable.

In actuating the follower of the slide mechanism, it felt heavy while actuation below the bed was greatly improved. Indications are that the mechanical advantage of this system should be improved.

2. Sheet metal Construction
There are parts fabricated in sheet metal that would be more formidable in other materials (C.I. or Al.) and thereby eliminate hand fitting operations.
3. Reverse Feed Stop Nut
The nylon nut used to set the length of reverse stitching is an undesirable construction. It could be turned down to a short stitch length and if the cam controlled feet is actuated, the mechanism could be jammed. A better construction would be a push button riding in a cylinder which could be adjusted in height thereby serving as a control for reverse stitch with manual control.
4. Bobbin Case Ejection Device
Unacceptable in its present form.

[fols. 5320-5334] C. Questionable Features

1. Nylon Gears
Running nylon against nylon is questionable. Our tests have only indicated successful use with nylon running against steel. The effect of moisture with two nylon gears against each other is doubled.
2. Clutch Mechanism
The design appears to be similar to Hosiery Seamers.' However, its performance and construction is an area that we have had little experience with in family machine use.
3. Slide Position For Straight Stitching
For straight stitching use, the follower continues to track in the slide actuating cam with the amplitude control set at zero. The writer has the feeling that she would be a lot happier if there was a more positive means of guaranteeing that the slide was stationary during straight stitching.
4. Assembly and Zeroing Out
This should be reviewed with the Vigorelli people.

III. The machine is more complex than the 401 Machine as far as the number of parts involved. However, the use of the same amplitude generating device in four places enables a mechanic to more readily pick up the construction details of the mechanism than would be possible if these constructions were different. The writer had the feeling that the construction "made sense" when reviewed and is inclined to feel the same reaction may be experienced by the mechanics.
The machine would be more expensive to manufacture than the 401 Machine.

IV. Servicing Problems would be increased.
More mechanism— more servicing.
The machine is subject to more needle breakage if wrong throat plate is used.

V. General Comments
The writer can't help but feel that an automatic zig-zag machine incorporating the decorative potential of the Vigorelli Machine, should be developed. This is a machine that at least should be completed for the "availability list."

E. Herbst.

[fol. 5235] IN UNITED STATES DISTRICT COURT

DEFENDANT'S EXHIBIT 76

Company Confidential

December 28, 1959.

Memorandum to: Mr. M. L. Waterman

Vigorelli Embroidery Machine

. . . . . .

[fol. 5236] More than this, I feel that we have reached the point of diminishing returns in the market attractiveness of a greater variety of automatic ornamental sewing. Most purchasers of automatic ornamental sewing machines find they

---

have very little use for this feature and there is a question in the minds of a growing portion of the public as to whether the feature is worth the price. While there will always be a market for machines incorporating the greatest versatility and ornamental features, I feel that this market is shrinking as such machines become more complex and more costly. On the other hand, I feel that there is a growing market for a simple type of zigzag machine—one which is first of all a top quality straight stitching machine, as that will continue to be the most common use for a home sewing machine. In addition, the machine of the future to my mind should have incorporated in it the ability to do plain zigzag stitching, which is the next most important use in home sewing. If then such a machine could have only one automatic feature to give it real sales appeal, that feature should be the ability to make a buttonhole automatically.

* * * * * * * * *

D. G. Robbins

cc: Mr. M. C. Lightner 12 30 59.

[fol. 5337] In United States District Court

Defendant's Exhibit 77

January 18, 1960

Mr. Arnaldo Vigorelli
Spett. A. Vigorelli S.p.A.
Fabbrica Macchine per Cucire
Viale Partigiani 48
Pavia, Italy

Dear Mr. Vigorelli:

Please refer to my letter to you of November 27, 1959, in which I stated that I would write to you further concerning your automatic embroidery machine.

We have now completed our consideration of this matter, from both the mechanical aspect and the question of infringement of the patents of others, and our conclusion is

that we will not embody the mechanical features of the machine which you submitted to us in any of our present machines. However, at some time in the future, we may wish to manufacture and sell a machine having the control for the zigzag needle and the feed-dog which is embodied in your machine. Therefore, we would be interested in acquiring a non-exclusive license from you on any patent or patent application which you may have filed covering this feature. If you would be interested in granting to us such a license on a royalty basis or any other basis, would you please let us hear from you.

We are preparing your sample machines for shipment to you and will give special attention, because of the nature of them, that they may be securely packed. You will be advised of the date and manner of shipment when they will be going forward to you and, at the same time, the drawings which were left with us will be returned to you.

Very sincerely, ——, ——, Vice President.

Noted by Mr. A. J. Pettit

[fol. 5338] IN UNITED STATES DISTRICT COURT

DEFENDANT'S EXHIBIT 78

President's Office Received November 17, 1955, Answered

Western Union
International Communications
W. P. Marshall, President

1955 NOV 17 PM 3:51

Received Via Western Union Cables

CD102 31 PD Intl FR-CD Milano Via WU Cables 17 2015

Singer for Lightener (for Lightener CR Singer Mfg. Co.)
NYK (149 Broadway 34th fl.)
(IF CLSD Del Drman 83 Liberty St.):

Agreement signed mailing copy stop tried every way Frankfurt Karlsuhe Wiesbaden to get a look at, Messrschitz none in dealers hands yet for sale only samples

Waterman

Karlsuhe Weisbaden Messrschitz

[fol. 5339] IN UNITED STATES DISTRICT COURT

DEFENDANT'S EXHIBIT 79

Received Patent Department, May 11, 1956, Answered—

Tuesday, May 9th.

Dear Colleagues:

After much discussion with Mr. W. C. F. yesterday I am heading for home tonight.

Am a bit concerned over the Messerschmitt situation. Apparently they have filed in many countries Great Britain being an example. Strange as it may seem all of those Japanese patent applications which are published for opposition are received at the Pat. Office in London about 6

weeks after publication. When received they become publications within the United Kingdom and are references. As an example P.A. Ser. No. 4588/1950 of Kokichi Matsudo filed April 10, 1950. Published May 11, 1953 became a reference in the United Kingdom on June 26, 1953.

Talked with Heggie today about the Pique M/C—also—Mr. MLW is taking up stand with Birchell as I leave too early in the morning to discuss it.

Had dinner with Mr. Lightner in London Sunday night—he arrives here in Scotland tomorrow. I think he is per- [fol. 5340-5342] turbed over Messerschmitt; unduly so.

. . . . . .

Typewritten copy prepared by Defendant.

JBS.

[fol. 5343] IN UNITED STATES DISTRICT COURT

DEFENDANT'S EXHIBIT 80

May 22, 1956.

Dr. S. Lando,
Compagnia Singer per Macchine da Cucire,
Via Dante 18,
Milan, Italy.

Dear Dr. Lando:

We thank you for your letter of May 16, 1956 enclosing a copy of Italian patent No. 530,381 of Messerschmitt together with the relative English translation.

This will confirm the fact that we have this day sent you the following cablegram:

> Can claims of Messerschmitt Italian Patent No. 530381 be infringed by machine like Class 319 whose feeding mechanism is not controlled by cams?

Since our Company is now preparing to manufacture in Italy the Class 319 machine as described in this Company's Perla U.S. patent application Serial No. 473,855, December 8, 1954, the question arises as to whether this machine

would infringe in Italy any claims of the above noted Messerschmitt Italian patent No. 530,381. We would be pleased if you would, at your earliest opportunity, discuss this question with our Italian patent attorneys and advise us of their conclusions.

We believe that you have available to you a specimen Class 319 machine. By referring to this machine and or to Italian Perla patent application Serial No. 88/64, May 25, 1955 (Corresponding to the above noted U.S. Perla application Serial No. 473,855) you will readily appreciate [fol. 5344] that the Class 319 machine differs from that disclosed in the Messerschmitt patent in that its feeding mechanism is not controlled by a rotary cam mechanism and, furthermore, its cam pack which controls the lateral needle movements is not designed to be readily removed from the machine.

Although it may not be pertinent to the present issue, it is interesting to note that the latest Messerschmitt automatic zigzag machine sold in the U.S. is similar to our Class 319 machine in that its feeding mechanism is not cam controlled and its cam pack is not designed to be readily removed from the machine.

In order to be of some assistance to your attorneys in determining the scope of the Messerschmitt claims we have hereinbelow discussed each of the claims in the light of the most pertinent prior art patents.

Claim 1

This claim calls for cam-controlled needle mechanism "and or" cam-controlled feeding mechanism. Our literal interpretation of this portion of the claim would be that the claimed machine comprises one of three constructions, to wit: (1) a cam-controlled needle only, (2) a cam-controlled feed only, or (3) both a cam-controlled feed and a cam-controlled needle. We do not know whether this claim would be so interpreted by the Italian courts par- [fol. 5345] ticularly since the specification indicates that the invention is in the provision of the combination of a cam-controlled needle and a cam-controlled feed.

This claim also calls for cams in the form of "replaceable packs".

The Class 319 machine, as above noted, has no cam-controlled feeding mechanism nor is its cam pack readily replaceable. The Vigorelli Italian patent No. 497,557 filed January 28, 1953, discloses a machine with a cam-controlled needle mechanism and a replaceable cam pack. Therefore, if this claim must include a cam-controlled feeding mechanism it cannot be infringed by our Class 319 machine, and if it is not necessary to include the cam-controlled feed in such claim then the claim is apparently anticipated by the Vigorelli patent disclosure.

Claim 2

We do not know whether the cam-controlled feeding mechanism is positively or alternatively included in this claim. In any event, it would appear to us that this claim primarily calls for a plurality of "finger-shaped" cam followers which may be selectively shifted into and out of operative relation with the cams, and means for operatively connecting such fingers with the needle and/or the feed.

Broadly interpreted, without reference to claim 1 and without including the cam-controlled feed, this claim would appear to be infringed by the Class 319 machine. How-[fol. 5346] ever, the Italian Gegauf-Bernina patent No. 501,172, filed May 30, 1953, discloses in Figs. 9, 17 and 18 the use in an ornamental stitching machine of a plurality of cams in combination with a plurality of cam followers.

Thus, this claim standing by itself and without including a cam-controlled feeding mechanism would appear to be anticipated by the Gegauf-Bernina Italian patent disclosure.

Claim 3

This claim apparently broadly calls for the idea of providing a plurality of cam followers which may be shifted independently of each other or in combination into engagement with the corresponding cams so that at least two of the followers can be cam-operated in unison.

As broadly interpreted and without reference to claims 1 and 2, this claim would be infringed by our Class 319 machine. We know of no prior art which would function in Italy fully to anticipate claim 3. However, Vigorelli Ital-

ian patent No. 507,862, filed September 29, 1953, broadly discloses the idea of engaging two cams with a single cam follower so that the needle can be shifted laterally in accordance with the combined cam action.

Claim 4

This claim apparently broadly calls for a plurality of cam followers which can be independently actuated so as to be engaged with or disengaged from their associated cams. In other words, it would appear that this claim at-
[fol. 5347] tempts to differentiate the cam follower construction of the Messerschmitt machine from that construction disclosed in Figs. 9, 17 and 18 of the above noted Italian Gegauf-Bernina patent No. 501,172.

As in the case of claim 3, above discussed, we know of no prior art which would function, in Italy as a complete anticipation for claim 4.

Claim 5

We do not know the exact meaning of claim 5 but it would appear to us that it is primarily concerned with the broad idea of providing a machine of the type described with a plurality of cam followers mounted upon a rocker which may, together with all of the cam followers, be readily removed from the machine. If this interpretation is correct, claim 5 appears to be innocuous for the Class 319 machine is not provided with a removable rocker.

Claim 6

This claim calls for an interlocking mechanism provided with the cam follower members so that as one follower is engaged with its associated cam the remaining followers will automatically be shifted into their inoperative positions. No such interlocking mechanism is provided in the Class 319 machine and thus this claim would appear to be innocuous.

Claim 7

This claim apparently is concerned with the idea of having all of the cam followers act either singly or in com-
[fol. 5348] bination upon a single rocking member which controls either the needle or the feed. Standing by itself

without reference to any of the preceding claims, claim 7 would apparently be infringed by the Class 319 machine. However, if so interpreted this claim would appear to be anticipated by the mechanisms disclosed in Figs. 9, 17 and 18 of the above noted Italian Gegauf-Bernina patent No. 501,172.

Claim 8

There appears to be no question but that this claim positively calls for a cam-controlled feeding mechanism and thus the claim cannot be infringed by the Class 319 machine which incorporates therein no cam controlling means for its feeding mechanism.

Claim 9

Apparently this claim positively recites mechanism which permits the packs of cams to be removed from their cam shafts in a direction axially of such shafts in order that the packs may be readily replaced. We do not believe that the single removable outboard cam of the Class 319 machine can be considered as a "cam-pack" in the sense that this term is used in claim 9. Also, since the inboard cam pack of the Class 319 machine is not readily removable from its cam shaft it would appear that this claim, standing by itself, cannot be infringed by this machine. Furthermore, claim 9 without reference to any of the preceding claims would appear to be substantially anticipated by Vigorelli [fol. 5349] Italian patent No. 497,557 filed January 28, 1953.

Claim 10

Since this claim appears positively to call for a particular type of stitch-length adjusting mechanism which is not incorporated in the Class 319 machine there is little doubt but that this machine does not infringe claim 10.

Summary

It would appear that if all of the Messerschmitt claims must be interpreted as including within their purview a cam-controlled feeding mechanism, then such claims cannot be infringed by our Class 319 machine. On the other hand if all of these claims need not be interpreted as including a cam-controlled feeding mechanism then the primary ques-

tion would appear to be whether the claims define sufficient invention over the above noted Vigorelli and Gegauf-Bernina patents to be infringed by the Class 319 machine.

As noted above we would appreciate receiving from you as soon as possible the opinion of our Italian patent attorneys regarding the infringement status in Italy of our Class 319 maching with reference to the Italian patent No. 530,381. You will note that in our above discussion we mentioned as prior art material only the several Vigorelli and Gegauf-Bernina Italian patents. As you well know there are other pertinent reference patents which could be employed against the subject Messerschmitt patent and [fol. 5350] we would be pleased to send copies of them to you if necessary. However, it would appear to us that the above noted Vigorelli and Gegauf-Bernina patents are the most pertinent to the present issue.

We thank you for any cooperation and assistance which you can extend to us in this matter.

Yours very truly, The Singer Manufacturing Company, ——, ——, Patent Department.

CC: M. L. Waterman.

[fol. 5351] IN UNITED STATES DISTRICT COURT

DEFENDANT'S EXHIBIT 81

Received Patent Department, May 28, 1956, Answered—

Compagnia Singer
Per Macchine Da Cucire

Direzione Generale

Milano
Via Dante, 18

24th May, 1956.

J. G. Stanford, Esq.,
Patent Department,
Elizabethport F, N. J.

Dear Mr. Stanford:

We confirm having received your cable of the 21st worded as follows:

> "'Can claims of Messerschmitt Italian Patent 530381 be infringed by machine like class 319 whose feeding mechanism is not controlled by cams'"

to which we replied today:

> "'According to our patent advisers mere fact that feeding is not controlled by cams is not sufficient as alone to exclusive infringement stop Report follows'"

Because of the technical nature of your question, we thought it advisable to ask Ing. Faraggiana, of Messrs. Barzano & Zanardo, to compare the drawings of Italian Patent Messerschmitt 530.381 with a 319 Class machine. The technical devices of this machine were explained to us by an operative of Monza Factory, who obviously has not been informed of the purpose of our investigation. Enclosed is Ing. Faraggiana's report.

We are at your disposal for any further information you may need on the matter and beg to remain,

Yours very truly, ——, ——, Compagnia Singer, per Macchine da Cucire,

Encl.

[fol. 5352] IN UNITED STATES DISTRICT COURT

DEFENDANT'S EXHIBIT 82

Received Patent Department, May 28, 1956, Answered—

Ing. Barzano & Zanardo
Studio Tecnico e Legale
per
Brevetti d'Invenzione
e Marchi di Fabbrica

Milano 23.5.1956.

Spett. Singer
Macchine da cucire
Milano
Via Dante, 18

To the attention of Dr. Lando—

We have considered the cable received by you in connection with Italian Patent 530381 and in order to have the most clear idea of the question we have considered also the structure of the machine inspected together with you in your factory in Monza.

Actually the question raised in the telegram can be intended under two different standpoints. The first is a purely juridical one. Considering that the main claim of Patent 530 381 recites a machine in which two sets of cams control the transversal motion of the needle and the feeding device respectively, the question can be laid whether a machine including only one of such sets of cam is to be automatically considered, owing to this very fact, as not infringing the patent; this is quite a general question, regardless of the novelty of the subject matter recited by the claim. The answer to this question, according to the Italian Law and practice, is negative. The claim is no limitation in an Italian patent, and any novel subject matter disclosed even only in the specification or the drawings can be validly covered by the Italian patent, unless it is in obvious contradiction with the claims (which is not the case in the present instance) or it is clearly excluded from the pro-

tection by a positive statement contained in the specification.

If the question is intended under the above aspect, the answer is that the mere circumstance that the feeding [fol. 5358] mechanism of a certain zigzag machine is not controlled by cams is not sufficient as alone to exclude infringement of the Italian patent by such machine.

The question, however, can be regarded also from a further technical standpoint, that is whether a machine generally similar to the machine disclosed in the Italian patent in which, however, the feeding mechanism is not controlled by cams is to be considered as validly protected by the so broadly interpreted Italian patent, whereby such a machine can be held to be an infringement thereof.

This is a question involving not only the knowledge of the general Italian Law and practice, but also the particular subject matter of the Italian patent as well as the prior art pertaining to the same scope. Moreover the answer would bear on a subjective opinion rather than an objective information.

We are writing this letter as an immediate answer to your question and we did not go through the prior art at our disposal by this time, but it is our impression that the broad idea of a set of cam controlling the lateral displacement of the needle bar was not novel in November 1954, so that such broad idea could not be covered by the Italian patent. We wonder whether the construction involving a plurality of fingers to be brought in contact with a plurality of cams to form combination just as described and illustrated in the Italian patent can be considered as novel in view of Harris and Vigorelli. We are very doubtful on this point; a question of this nature, however, should be proposed in very full and detailed terms, but perhaps the cable received by you was not aiming to an answer under such aspect.

Anyhow it is obvious that whether the Italian patent can validly cover also machines without cams controlling the feeding mechanism is quite a questionable matter.

Yours faithfully, Ing. Barcano & Zanardo, by Ri. Genarofalie.

[Vol. 5354] IN UNITED STATES DISTRICT COURT

DEFENDANT'S EXHIBIT 84

Received Patent Department June 18, 1956, Answered—

Ing. Barzano & Zanardo
Studio Tecnico e Legale
per
Brevetti d'Invenzione
e Marchi di Fabbrica

Milano 7.6.1956.

Spett.
Singer
Macchine per cucire
Milano
Via Dante, 18

Alla cortese attentione del Dr. Lando—
Italian Patent 530381 Messerschmitt.

Dear Dr. Lando,

further to our letter of May 23, we have carefully reconsidered the remarks of Messrs Singer Mfg Co. contained in their letter of May 22 addressed to you and we summarize our views hereunder.

Claim 1—Literally the claims call for packs of cams controlling the lateral movement of the needle and/or the cloth feed. Personally, we have some doubt whether the expression "and/or", in any language is the most adapted to qualify also the presence of the first element alone, but as far as we know, the literal interpretation contained in said letter is universally accepted also in Italy.

Whether the so broad interpretation would be taken as correct in this actual case, is another question, because the whole specification must be taken into account.

The first paragraph of the specification clearly states that the invention relates to machines having both zigzag and feeder automatically controlled. In the third paragraph it is acknowledged that previous machines were existing in which a plurality of cams on a single shaft were provided

for controlling the transversal movement of the needle. The fourth paragraph, as a consequence, concludes that the invention provides a control by a plurality of cams both for the zig-zag and the feeder.

[fol. 5355] In our opinion, a correct interpretation of claim 1 should refer to the combination of the two controls, because the specification fairly indicates that such was the inventor's idea, although claim 8 might be taken as a contrary argument.

We cannot be sure, however, that a Court would not accept the meaning of this claim in the broader sense, especially if taken in combination with claim 3, as we shall discuss hereinafter.

Anyhow, the broad idea of a plurality of cams selectively controlling the zig-zag motion of the needle is obviously anticipated by Vigorelli and we wonder how could a Court have any doubt on this circumstance.

As a conclusion we are of the opinion that a correct judgment according to the Italian practice should decide that the invention validly covered by claim 1 is to be intended as referred to both controls, either for formal reasons in view of the specification or for reasons of novelty in view of the prior art or for both reasons taken in combination.

Claim 2—In our opinion this claim, as referred to claim 1 in any sense but excluding the statement of claim 3, contains no subject matter. The claim broadly states that the cams cooperate with followers. If a mechanism is controlled by cams, obviously corresponding followers must be provided. A single shiftable follower for several cams would be a subsequent step in an inventor's mind. Claim 1 implicitly includes the idea of followers moved by the cams, otherwise the provision of cams would be useless. The term "finger-shaped members" is presumably a translation of some German term.

In our mind, this claim adds nothing inventive to claim 1 and, therefore, is anticipated not only by Gegauf, but also by Vigorelli, in spite of the fact that Vigorelli shows a single follower. The remarks of said letter in this respect, however, are quite correct.

Claim 3—This claim contains a clause which, taken in combination with the broadest interpretation of claim 1,

originates perhaps the most delicate point of the whole question. This clause is the possibility of engaging a plurality of followers provided on a single member each with the respective cam so as to obtain the effect as of a cam corresponding to the superposition of several cams.

[fol. 3356] If we assume that, at least with respect to the clause of claim 3, a Court reads the patent as not limited to the existence of both zig-zag and feeder controls, we must conclude that Class 319 machine incorporating such feature falls within the scope of the patent.

The question here is whether in view of the prior art a Court would hold said feature as broadly defined hereabove to be inventive subject matter. Our opinion in this respect is that Vigorelli sufficiently teaches to utilize the profile of two cams simultaneously for obtaining the result mentioned hereinbefore. We wonder whether a mechanism including a plurality of actuating cams and an actuated member provided with a plurality of followers each of which can be optionally engaged with the respective cam so as to cause either one or more followers to be operative is disclosed in a prior art whatsoever different from sewing machines. If by chance this is the case, it would be very scarce invention, if any, to use such device instead of using the single follower of Vigorelli in the intermediate position. It must be observed incidentally that using a second cam in addition to another cam simultaneously may give rise to a substantially new profile, but using a further cam in addition to a considerable number of other cams simultaneously would lead either to a very slight change in the sewing line or to something very similar to a mere straight sewing. We mean that the improvement in embroidery designs becomes less important as far as the number of simultaneously operating cams increases.

Anyhow, claim 3 contains the most questionable feature in connection with the problem raised by said letter.

Our opinion is that an Italian Court would rather hold this feature not patentably novel in view of the prior art, especially in these times when our Courts seem to get perhaps more severe in recognizing inventiveness. This is, however, only an opinion of ours, and perhaps a search through more or less similar arts might afford some further argument.

Claim 4—The statement of this claim is already included as an alternative in claim 3. Although a complete anticipation has not been found, our opinion is that such a construction would be a plain equivalent of Vigorelli or Gegauf, if it is intended that only one cam is to be used at a time.

Claim 5—This claim refers to the followers mounted on a shaft 38, on which each follower can be rocked so as to [fol. 5357] become operative (39) or to be withdrawn (40). We do not remember exactly whether the followers of Class 319 are mounted in this manner, but our opinion is that this feature as above does not show inventiveness; it may be considered as a particular embodiment of claim 3, supposing the latter is held valid.

Claim 5 mentions also the optional feature according to which the shaft bearing the followers is mounted on a tiltable rocker (35). This secondary feature does not appear to be incorporated in Class 319 Machine, as far as we remember.

Claim 6—We agree that the Class 319 machine does not interfere with this claim, which recites an embodiment in contradiction to Claim 3.

Claim 7—It is right that the broad idea recited by this claim, that is a single rocking member bearing a plurality of followers, is anticipated by Figs. 9, 17, 18 of Gegauf; this claim should be considered only in combination with claim 3, in which case, however, it would add nothing further patentable to the latter.

Claim 8—The technical feature recited by this claim has no interest in the question, because it is strictly related to the existence of two cam-controlled mechanisms. The only interesting passage of this claim is the condition expressed in optional form "when two packs of cams are provided"; this might support the interpretation that the existence of a cam-controlled feeding mechanism is not imperative according to the patent.

Claim 9—This claim is apparently referred to the provision of two controlling mechanisms, comprising two sets of cams born by a shaft on the two opposite sides of a gear wheel fixed on the shaft, whereby each of said two sets of cams can be removed from the shaft independently from the other. We do not feel that this claim can be given a

broader meaning than that; consequently, it could not be considered as infringed by Class 319 Machine.

Claim 10. This claim, with its redundant wording, recites, as far as we understand, the provision of a conventional hand operated stitch length regulator in addition to the cam-operated feed regulator, so as to use either at will.

[fol. 5358] Class 319 Machine shows nothing similar.

Summarizing our views, the substantial danger that the Class 319 Machine is declared by a Court to be an infringement of the Italian Patent 530381 depends upon whether the Court would hold this patent to cover a construction substantially defined by the following more or less formal claim:

"A sewing machine for automatic embroidery including a rocking member actuating the transversal oscillations of the needle bar, a plurality of cams on a rotating shaft, and a plurality of followers on said rocking member each of which can be set into engagement with one of said cams, whereby the movement of said rocking member can be governed by any number of said cams simultaneously."

In our opinion the structure roughly outlined hereabove is actually disclosed in the Italian Patent; there would be the doubt, however, whether the whole of the Italian text shows that the provision of a single set of cams is positively excluded from the protection or not. Although the more sensible interpretation of the specification would lead to exclude said broad protection, the possibility exists that a Court would accept the broader interpretation.

In this latter case, the question of inventiveness would arise. In our opinion it would be within the range of an expert to use several followers instead of a single one either in Vigorelli or in Gegauf, especially in view of Vigorelli's teaching that two cams simultaneously can be used for combining the two designs given by the single cams into one.

Although this opinion can be reasonably supported with good chances of having it accepted by an Italian Court, some risk must still be taken into account, since this is a question of merits to be evaluated by human brains.

Anyhow we feel that some prior art showing the use of

several cams used in selective combination simultaneously in machines of not too different sort, such as textile or knitting machines, would be of considerable help in obtaining a decision of invalidity in connection with the invention outlined by us in the lines hereabove.

Yours truly, Ing. Barzano & Zanardo, by: ——

———

[fol. 5359] In United States District Court

Defendant's Exhibit 85

Received Patent Department, June 20, 1956, Answered.

L. Adamson
Frankfurt Am Main
Gutleutstrasse 42-44
Singer-Haus

June 15th, 1956.

J. G. Stanford, Esq.
The Singer Manufacturing Company
Patent Department
Elizabethport F, N. J.

Dear Mr. Sfanford,

Multiple-Cam Ornamental Stitch Sewing Machine—
Messerschmitt

With reference to the visit of patent agent Dipl. Ing. Busselmeier of Augsburg, Grottenau 2, and the chief designer of the Messerschmitt A.G. of Augsburg, on May 25th, 1956, and the inspection by them of the 319 W Machine the following letter has been received by us from Mr. Busselmeier.

"Mr. Brandt of the firm Messerschmitt and I as permanent counsellor in patent law matters and representative of the Messerschmitt A.G. ascertained that the ornamental stitch automatic of the type 319 W agrees identically in its essential principles with the ornamental stitch automatic for which the firm Mes-

serschmitt A.G. filed patent applications some considerable time ago already. In the constructional details too we found surprising conformities and identities.

The similarity of principle must inter alia be seen in that several feeler followers located together on a rocker may be combined at choice so that a great number of possible combinations is given if a stack of gangs is connected with the followers. The constructional similarities concern in particular the construction of the rocker and the arrangement of the feeler followers on the rocker.

The patent law questions connected with these ascertainments should best be discussed between the mutual patent counsellors with the aim to arrive at an amicable settlement ("Applanierung") of the situation. For this the way may perhaps be chosen that the two counsellors for patent law matters prepare and formulate conjointly a proposition for such a settlement ("Applanierung") which is to be submitted to the boards of directors.

I may repeat yet that patent applications for the ornamental stitch automatic of Messerschmitt have not been filed in Germany and USA only but also in a number of foreign countries so that in the case of an agreement it should be desirable to come to a global arrangement.

[fol. 5360] I beg to ask, also in the name of my clients, the Messerschmitt A.G., for your suggestions for another conference.

I thank you at the same time, also in the name of Mr. Brandt and likewise in the name of the board of directors of the Messerschmitt A.G., for the kind reception we had by you and remain,

With kind regards. Yours very respectfully. Sgd. R. Busselmeier."

Kindly note.

As you will see this letter confirms the remarks of Mr. Busselmeier when he called on us and which we reported

to you on the 25th ult. Nothing is mentioned now, however, of who is to pay the possible expenses of Mr. Busselmeier and where a further conference is to take place. In conformity with the suggestion in your letter of June 8th, we have not communicated anything of its contents to Mr. Busselmeier or the Messerschmitt A.G. up to now.

I await now your further advices how you wish to deal with this matter and the proposal of Mr. Busselmeier of a further conference of your goodself with him.

Yours very truly, L. Adamson.

Copy to Mr. M. L. Waterman.

[fol. 5361] IN UNITED STATES DISTRICT COURT

DEFENDANT'S EXHIBIT 86

air mail

June 27, 1956.

L. Adamson, Esq.,
Singer Nähmaschinen Akt.-Ges.,
Gutleutstrasse, 42,
16 Frankfurt a Main 1,
Germany.

Dear Mr. Adamson:

Multiple-Cam Ornamental Stitch Sewing Machine—Messerschmitt.

Thank you for your letter of June 15th advising us as to the contents of a letter you have received from Mr. Busselmeier.

I quite agree with Mr. Busselmeier that an amicable settlement of this entire matter should be reached, for only our competitors would profit from extended and costly litigation between Singer and Messerschmitt.

Messerschmitt's repeated statement that it has patent applications filed in a number of countries is of interest. As stated in my last letter to you, we have filed patent applications in some twenty countries of the world and

this fact should be made known to Mr. Busselmeier and, if possible, inquiry should be made as to the number of countries in which they have made application.

I expect to be in Europe again in the latter part of July or in the month of August, and if this is satisfactory to Mr. Busselmeier I shall be glad to discuss this matter [fol. 5362] with him at that time. On the other hand, Mr. Busselmeier may feel that an earlier meeting is desirable and, if so, his suggestions would be appreciated.

The reading of Mr. Busselmeier's letter leaves me with the impression that he feels that Messerschmitt's position is favorable and, no doubt, this attitude was fostered by the fact that we approached Messerschmitt last May. Within a week or two, we believe a conflict between the United States patent applications of Singer and Messerschmitt should develop, and we feel that it will be to our advantage if it develops before either you or we have any further talks with Busselmeier. Accordingly, we suggest that, for the moment, no urgency be displayed in this matter, for we believe that upon learning from the U. S. Patent Office of such a conflict Busselmeier will be stimulated into making further inquiries of Singer.

Yours very truly, The Singer Manufacturing Company, ——, ——, Patent Department.

CC:Mr.M.L. Waterman.

[fol. 5363] IN UNITED STATES DISTRICT COURT

DEFENDANT'S EXHIBIT 87

July 10, 1956.

M. L. Waterman, Esq., Vice-President,
The Singer Manufacturing Company,
Singer Building, New York.

Dear Mr. Waterman:

Multiple-Cam Ornamental Stitch Sewing Machine—Messerschmitt A.G.

We have learned from the United States Patent Office that our United States Perla patent application Serial No. 473,855, relating to the Class 319 machine, interferes with an application of an unnamed adversary, which we have no doubt is Messerschmitt. Messerschmitt's United States attorney will, no doubt, waste no time in advising his client of this interference.

The burden of going forward with this interference now rests with Messerschmitt who undoubtedly has been given the usual 30 days in which to indicate to the United States Patent Office whether it wishes to enter or withdraw from a possible interference. The purpose of the interference is to determine which of the two interfering parties should be awarded a patent covering the interfering subject matter of both applications. If Messerschmitt chooses not to enter the contest then the Perla application would issue as a patent containing claims which in the United States [fol. 5364] would be infringed by the Messerschmitt machine. We fully expect Messerschmitt to proceed with the interference.

Neither Singer nor Messerschmitt will be advised by the Patent Office as to the identity of the other party until Messerschmitt indicates to the Patent Office that it will enter the interference. However, Messerschmitt, like ourselves, should have no doubt as to the identity of its unnamed adversary.

We would expect to prevail in such an interference because the invention date of the Perla application is prior to the earliest patent application date which Messerschmitt

can establish. However, as you know, the reverse situation obtains in Europe where Messerschmitt can establish a patent application date prior to any that Singer could establish. It is for this reason that it would be to our best interest to enter into an agreement with Messerschmitt.

In view of this latest development we believe that it would be well for us to ask Mr. Adamson to answer Mr. Busselmeier's letter in the manner suggested in a draft letter which we are enclosing.

Yours very truly, The Singer Manufacturing Company, ——, ——, Patent Department.

Enclosure—
Draft Letter

In triplicate

[fol. 5365] In United States District Court

Defendant's Exhibit 89

Received Patent Department, August 9, 1956, Answered—

The Singer Manufacturing Co.
Singer Building
149 Broadway
New York 6, N.Y.

In Replying please refer to 31-021

August 8, 1956.

L. Adamson, Esq.,
Frankfurt a/Main, Germany.

Dear Mr. Adamson:

Multiple-Cam Ornamental Stitch Sewing Machine—Messerschmitt A.G.

Both Mr. Stanford and I were pleased to receive your letter of August 3rd, addressed to Mr. Stanford and advising that Mr. Busselmeier would like to see Mr. Stanford

when he is in Europe the latter part of August. First, I would like to say that both Mr. Stanford and I will be coming to Germany to partake in the talks with Mr. Busselmeier and representatives of the Messerschmitt Company.

We had hoped very much that Mr. Busselmeier would have received certain information from the United States Patent Office before we would begin discussions with him, and we would prefer to confer with him, therefore, shortly after the first of September, as by that date we believe that he will surely have heard from that Office. However, I would caution you that the knowledge we have that he will be receiving this information from the Patent Office, probably through his New York attorneys, is of a very confidential nature and, whenever you may be talking with him in any manner, we would not wish any mention made of the fact that we have knowledge that he will be receiving this information. We would prefer and hope that he would first bring to your attention the fact that he or his attorneys have had word from Washington. If and when he should first happen to mention having received such a communication, please cable me this fact so that I will know of it at the earliest possible moment.

. . . . . .

[fol. 5366] If you agree with the preceding plan and you can be present, as we would very much like to have you there, and it can be arranged that Dr. Weigand can be present on the dates that I have mentioned, and you find that arrangements can be made with Mr. Busselmeier and representatives of the Messerschmitt Company for our conversations to take place beginning Wednesday, September 5th, approximately, please proceed to make such arrangements. I suggest that any conversations you have with Mr. Busselmeier be of a nature that will not imply to him any anxiety on our part in this matter but will just express our desire to arrive at an amicable agreement, as we have previously mentioned. If, when arranging for the conference, any information is elicited from Mr. Busselmeier concerning any word he may have received from the United States through his attorneys, and without you in

any way mentioning the U.S. Patent Office or any letter from it, we would be most interested to learn of it. I realize this last is repetitious but, in view of the confidential nature of some of the information that we have received, we cannot refrain from making this statement once again.

. . . . . .

[fol. 5367] M. L. Waterman, Vice President.

. . . . . .

[fol. 5368] In United States District Court

Defendant's Exhibit 90

Received Patent Department, March 4, 1957, Answered

Toulmin & Toulmin
Attorneys at Law
Corporation and Patent Law
Washington 4, D. C.

March 1, 1957.

Singer Manufacturing Company
Elizabeth F, New Jersey

Re: Agreement Singer Mfg. Co.—Messerschmitt

Gentlemen:

We have been forwarded the attached contract in quadruplicate, for the purpose of submitting it to you for your signature. We are not familiar, except generally, with the negotiations that have taken place between yourself and Messerschmitt, but we understand that this signed contract is in accordance with the negotiations that have been conducted.

This has been confirmed by a cable from our Belgian office from Mr. H. W. Herzfeld who is now there for the next several months dealing with our European clients.

Will you kindly sign the contract and return two copies to us, retaining the original and a duplicate for your files.

If we can be of any further service to Messerschmitt or yourself, please advise.

Very truly yours, H. A. Toulmin, Jr.

Encl. Agreement (4 copies)

cc: Brussels office
cc: Dayton office
cc: Busselmeier

[fol. 5369] Agreement

Agreement dated as of February Eleventh, Nineteenhundred Fiftyseven, between the Singer Manufacturing Company (hereinafter called "Singer"), a corporation organized and existing under the laws of the State of New Jersey, United States of America, and Messerschmitt, A. G., (hereinafter called "Messerschmitt"), a corporation organized and existing under the laws of Western Germany for them and their respective assignees and successors.

1. Singer will not bring any infringement action against Messerschmitt under the rights derived from patents now issued or to be issued in any country with respect to subject matter disclosed in Messerschmitt German Patent Applications and when embodied in sewing machines manufactured and sold by Messerschmitt and/or its customers.

2. Messerschmitt will not bring any infringement action against Singer under the rights derived from patents now issued or to be issued in any country with respect to subject matter disclosed in Singer's German patent application Serial No. S 46,780 and when embodied in sewing machines manufactured and sold by Singer and/or its customers.

3. Singer and Messerschmitt each agrees not to institute any opposition, nullity or invalidation proceedings in any country against or otherwise to attack the others above noted patents or patent applications in any country and immediately to withdraw any such proceeding if it has already been instituted provided, however, that if such patents and patent applications are or have become involved in a patent office priority-determining proceedings such as a United States interference or a Canadian conflict proceeding, then both parties will work together in order to settle

such proceeding in accordance with the laws and regulations of the patent office concerned and in the spirit of this agreement.

4. Singer and Messerschmitt each hereby releases the [fol. 5370] other from any and all claims for infringement of patents in respect of subject matter coming under the terms of this agreement and manufactured and/or sold in any country prior to the date of this agreement.

5. Singer, as designated in the agreement, shall be understood as including the Singer Manufacturing Company, Singer Sewing Machine Company, their present and future subsidiary, affiliated, and associated companies, licensees and customers throughout the world. Messerschmitt, as designated in this agreement, shall be understood as including Messerschmitt A.G., its present and future subsidiary, affiliated, and associated companies, licensees and customers throughout the world.

In Witness Whereof, the parties have executed this agreement as of the day and year written above.

The Singer Manufacturing Company. By , ,
Vice President.

Witness:

——, ——

Messerschmitt A.G. By [Copy Illegible].

Witness:

[Copy Illegible]

[fol. 5371] IN UNITED STATES DISTRICT COURT

DEFENDANT'S EXHIBIT 91

March 8, 1957.

Toulmin & Toulmin,
Pennsylvania Building,
Washington 4, D. C.

Gentlemen:

Singer-Messerschmitt Patent Agreement

Thank you for your letter of March 1, 1957, enclosing in quadruplicate a proposed Singer-Messerschmitt agreement.

We are in favor of the agreement in its present general form and we would have had it executed by Singer but for the wording of a single clause of paragraph (1). To avoid any possible misunderstanding as to its meaning, we would suggest that this paragraph contain some specific reference to the type of Messerschmitt machine or machines covered by the agreement. Our suggestion is that in paragraph (1) the clause "disclosed in Messerschmitt German Patent Applications" be altered to—disclosed in Messerschmitt German Patent Application Serial No. 25,287 VII 52a—. In the event that the above identified Messerschmitt patent aplication does not adequately or completely disclose the Messerschmitt machine forming the subject of the agreement, paragraph (1) could properly contain a reference [fol. 5372] to other pertinent pending patent applications. If your clients prefer, photographs or drawings of the subject Messerschmitt machine could be made a part of the agreement with reference to the photographs or drawings being made in paragraph (1).

We would appreciate it if you would pass on to our Messerschmitt friends our suggestion as to paragraph (1). In the event that they favor the suggestion they may wish to redraft the agreement *and send it on to us* for execution.

Alternatively; they may prefer to discuss the matter further with Singer. Our Vice-President, Mr. Max L. Waterman, expects to be at the Frankfurt Office sometime shortly after April 15 and if our Messerschmitt friends should be desirous of further discussion satisfactory ar-

rangements can be made for Mr. Waterman to see them.

We are pleased that your client is favorable to this type of patent agreement for it permits each party to continue to manufacture and sell its respective machine, throughout the world, without the necessity of costly interference and opposition proceedings as well as protracted patent litigation.

Yours very truly, The Singer Manufacturing Company, ——, ——, Patent Department.

cc: MLW (Blnd)

Copies sent to W. Niemann and L. Adamson 3 14 57.

[fol. 5373] IN UNITED STATES DISTRICT COURT

DEFENDANT'S EXHIBIT 92

Received Patent Dept., May 20 1957. Answered—

Dr. E. Wiegand
München
Dipl.-Ing. W. Niemann
Hamburg
Patentanwälte

14th May 1957.

By Air-Mail!

The Singer Manufacturing Company
Patent Department
Elizabethport F, N.J.

Attention—Mr. Stanford

W.17130 57 Dr. EW DM

Re: Singer-Messerschmitt Patent Agreement (US-Serial No 548 481)

Dear Mr. Stanford,

with reference to the prior correspondence I am reporting that on the 10th inst. a conference has taken place between Mr. Fuchshuber, Mr. Busselmeier and the writer in Munich in the works of Messerschmitt A.G.

In the said conference the whole subject matter has been thoroughly discussed.

The result was the following:

Messerschmitt is willing to execute an agreement on the general lines of the document (3) and is willing to accept a "nonexclusive, *nontransferable* and royalty-free license" as regards US-Patent Application Serial No. 548 481 provided that

1) in the "premises" of the agreement a statement is included that the provisions of the agreement dated April 16th, 1957 (Frankfurt am Main) remain unaltered, and
2) a slight formal amendment is effected in paragraph 3 of the document (3), and
3) a slight amendment is effected on page 2, paragraph 2 of the said document.
("Document (3)" in this connection means the agreement (3) submitted by SNAG to Mr. Bässelmeier).

As a matter of precaution I am enclosing herewith a copy of the said document (3) (Agreement).
[fol. 5374] The details of the conference are to be seen from the enclosed "Aktennotiz," translation of which is also enclosed in duplicate.

The main objection of Messerschmitt was made to the word "nontransferable license." I succeeded, however, in overcoming this objection by suggesting a reference to the agreement of April 16th, 1957 (Frankfurt am Main), in order to make clear that Messerschmitt's right to grant licenses as regards their constructions Kl. 52 KE, Kl. 53 KE and Kl. 54 KE remains unaltered.

The Board of Messerschmitt had objected to the third paragraph of the document (3), which objection, however, may be overcome by inserting the word "therefor" or "in consideration thereof" or the like in the first line of paragraph 3 of document (3).

The slight amendment on page 2, paragraph 2, line 2, ("efforts" instead of "endeavours") is due to an animosity of Mr. Fuchshuber to the word "endeavours"; I think you will not have any objections against "efforts."

The following steps now have to be taken:

(a) Messerschmitt will at once examine whether in fact the US Application Serial No 548 481 has been already assigned to Messerschmitt. Singer is also requested to examine whether the assignment has been correctly recorded at the US Patent Office.
(b) Messerschmitt will execute the assignment according to document (2) before the US Consul (document (2) sent by SNAG) as soon as it is clear that in fact the assignment of Willy Messerschmitt and Kurt Brandt to "Messerschmitt" is recorded.
(c) Messerschmitt is awaiting an amended agreement (new document (3)).

I think that it will furthermore be necessary to ask for a further extension of term as regards the interference proceedings.

[fol. 5375] I am enclosing herewith a draft for a new document (3); I would be pleased, however, if you would bring it into idiomatic English.

Very truly yours, by Ernest Wiegand

Encl.:

Copy of document (3) sent by SNAG (to follow)
Aktennotiz with translation i.duplo (to follow)
draft for new document (3) in duplo (to follow)
c.c. SNAG, Frankfurt Main.

[fol. 5376] In United States District Court

Defendant's Exhibit 93

Received Patent Department, May 20, 1957. Answered May 21, 1957

16th May 1957.

Dr. E. Wiegand
München
Dipl.-ing. W. Niemann
Hamburg
Patentanwälte

By Air-Mail

The Singer Manufacturing Company
Patent Department
Elizabethport, N. J.

Attention—Mr. Stanford

W.17130/57 DM

Re: Singer-Messerschmitt Patent Agreement (US-Serial No. 548 481)

Dear Mr. Stanford,

following my letter of the 14th inst. I am enclosing herewith the following papers:

1) copy of document (3) sent by SNAG.
2) Aktennotiz of the 10th inst.
3) translation thereof in duplicate
4) draft for new document (3) in duplicate.

Very truly yours, by Ernest Wiegand.

Encls. as above

[fol. 5377] Agreement

Agreement dated as of —, 1957 between The Singer Manufacturing Company, hereafter called "Singer", a corporation organized and existing under the laws of the State of New Jersey, United States of America, and Messerschmitt A.G., hereinafter called "Messerschmitt", a corporation

organized and existing under the laws of the Federal Republic of Germany, for them and their respective assignees and successors.

Whereas, Singer is the sole owner by virtue of assignment date — , 1957 from Messerschmitt of an application for United States patent and of the inventions claimed therein, which application was filed in the United States Patent Office by Willy Messerschmitt and Kurt Brandt on or about November 22, 1955 under Serial No. 548,481 and bearing as its title "Zigzag-Type Sewing Machine with Automatic Means for Machine-Made Decorative Effects" and had been assigned to Messerschmitt by the said inventors.

Whereas, Messerschmitt is desirous of acquiring (therefor) for the territory of the United States of America a nonexclusive, nontransferable and royalty-free license to manufacture and sell sewing machines as disclosed in the said United States patent application Serial No. 548,481 and any and all United States patents which may be granted therefor.

Now, therefore, in consideration of the premises the parties agree as follows:

(1) Singer hereby grants unto Messerschmitt an irrevocable, nonexclusive, nontransferable and royalty-free license to manufacture and sell in the United States of America sewing machines of the type disclosed and/or claimed in [fol. 5378] United States patent application Serial No. 548,481 and as disclosed and/or claimed in any United States patents which may be granted therefor.

(2) Singer hereby agrees that it shall use its best efforts to prosecute the said application Serial No. 548,481 before the United States Patent Office for the purpose of acquiring if possible a good and valid patent therefor.

In witness whereof, the parties have executed this agreement as of the day and year written above.

The Singer Manufacturing Company, By —, —.

Witness:

—, —.

Messerschmitt A.G., By —, —.

Witness:

—, —.

[fol. 5379] Translation

Memorandum

Conference between Assessor Fuchshuber of Munich, Patent Attorney Busselmeier of Augsburg, Patent Attorney Dr. E. Wiegand of Munich.

Re:—Agreement Singer Messerschmitt re U.S. Patent Application Serial No. 548 481

1. Mr. Busselmeier states that the assignment of the patent application by the inventors to Messerschmitt AG. has most probably already been recorded in the U.S. Patent Office. The assignment by Willy Messerschmitt and Kurt Brandt was executed before the American Consul in Munich at the end of 1955 and was sent to the United States by Mr. B. with registered letter of 4th January, 1956.

2. Mr. B. therefore thinks that there are no objections to the wording of the assignment, Document (2).

3. Re:—Agreement:

Mr. Fuchshuber declares that Messerschmitt has the following objections to the draft of the agreement (see Document (3):

(a) it was not made sufficiently clear that Messerschmitt's rights according to the agreement of 16th [fol. 5380] April, 1957 are fully maintained, particularly with respect to the provision that Messerschmitt has the right to grant licenses for the manufacture of the machines according to drawings KL 52 KE, KL 53 KE, KL 54 KE in all countries of the world (including the United States).

Further, Messerschmitt formally objects to the wording of paragraph 3 on page 2 of the agreement and would in this respect prefer a somewhat amended wording. Therefore, the following amendment is proposed for the agreement, enclosure (3), page 1, paragraphs 2 and 3:

(aa) Singer and Messerschmitt have agreed by agreement of 16th April, 1957, No. 1 thereof, that Singer will not derive any rights against Messerschmitt from any patents insofar as articles are concerned which are disclosed in the drawings annexed to said agreement (KL 52 KE, KL 53 KE, KL 54 KE).

"Messerschmitt" according to No. 5 of said agreement means: Messerschmitt AG., its present and future subsidiary, affiliated, and associated companies, licensees and customers (insofar as the use of the sewing machines is concerned), in the whole world.
[fol. 5381] These provisions of said agreement remain unaltered.

(bb) Messerschmitt has transferred U.S. patent application Serial No. 548 481 to Singer by assignment of and is desirous of obtaining therefor (in return) a nonexclusive, nontransferable, royalty-free license for the manufacture and sale of sewing machines according to said U.S. patent application.

(cc) The remainder of the agreement may follow unaltered. Only on page 2, paragraph 2, line 2 of the agreement the word "endeavors" is to be replaced by "efforts".

4. Dr. W. will send a report to Singer and undertakes to have new papers for the agreement, Document (3), prepared and dispatched.

Munich, 10th May, 1957
Fu:Co.

[fol. 5382] Draft for new document (3)

Agreement

Agreement dated as of , 1957 between The Singer Manufacturing Company, hereafter called "Singer," a corporation organized and existing under the laws of the State of New Jersey, United States of America, and Messerschmitt A.G., hereinafter called "Messerschmitt," a corporation organized and existing under the laws of the Federal Republic of Germany, for them and their respective assignees and successors.

Whereas, Singer and Messerschmitt have agreed by agreement dated as of April 16, 1957 (Frankfurt am Main) number (1) that Singer will not enforce against Messerschmitt any rights derived from any patents in any country

with respect to subject matter disclosed in the drawings Kl. 52 KE, Kl. 53 KE and Kl. 54 KE annexed to the said agreement. "Messerschmitt" includes according to number (5) of the said agreement dated as of April 16, 1957 (Frankfurt am Main): Messerschmitt AG., its present and future subsidiary, affiliated, and associated companies, licensees, and customers, as far as the use of the sewing machines is concerned, throughout the world.

Whereas, Singer and Messerschmitt agree that the provisions of the said agreement dated as of April 16, 1957 (Frankfurt am Main) shall remain unaltered.

Whereas, Messerschmitt has assigned to Singer, its successors and assignees, for the territory of the United States of America, the entire right, title and interest in and to the United States Patent Application Serial No 548,381, all [fol. 5383] inventions disclosed therein and in and to any and all United States Patents which may hereafter be granted therefor and in and to any and all extensions, divisions or reissues of said patents, and Messerschmitt is desirous of acquiring therefor (in return) for the territory of the United States of America a nonexclusive, nontransferable and royalty-free license to manufacture and sell sewing machines as disclosed in the said United States patent application Serial No 548 481 and any and all United States patents which may be granted therefor.

Now, therefore, in consideration of the premises the parties agree as follows:

(1) Singer hereby grants unto Messerschmitt an irrevocable, nonexclusive, nontransferable and royalty-free license to manufacture and sell in the United States of America sewing machines of the type disclosed and or claimed in United States patent application Serial No. 548 481 and as disclosed and or claimed in any United States patents which may be granted therefor.

(2) Singer hereby agrees that it shall use its best efforts to prosecute the said application Serial No. 548 481 before the United States Patent Office for the purpose of acquiring if possible a good and valid patent therefor.

In Witness Whereof, the parties have executed this agreement as of the day and year written above.

The Singer Manufacturing Company, By ——, ——
Vice President.

Witness:
——, ——.

Messerschmitt A.G., By ——, ——

Witness:
——, ——.

——

[fol. 5384] In United States District Court

Defendant's Exhibit 94

Received Patent Department, May 20, 1957. Answered.

Dr. E. Wiegand
Munchen
Dipl.-Ing. W. Niemann
Hamburg
Patentanwälte

14th May, 1957.

The Singer Manufacturing Company
Patent Department
Elizabethport F, N.J.

Attention—Mr. Stanford

By Air-Mail:

W.17130/57 Dr. EW/DM

Re: Singer-Messerschmitt Patent Agreement
(foreign Patents)

Dear Mr. Stanford,

In the conference on the 10th inst. in the works of Messerschmitt A.G., Munich, I have already discussed the question whether Messerschmitt is willing to assign all other Patents and Patent Applications corresponding to US Serial No 548 481 to Singer.

Mr. Fuchshuber and Mr. Busselmeier informed me that they personally agree to an assignment of the said rights. They wish, however, to defer the execution of this assignment until the assignment (2) and the agreement (3) have been executed.

This standpoint is inter alia due to tactical considerations. Mr. Fuchshuber informed me that he wishes to avoid the impression that all rights of Messerschmitt are assigned to Singer at once in consideration of the sum of 1 Dollar.

Mr. Fuchshuber further informed me that he must take regard of the new directors of Messerschmitt who are not familiar with the details, but he thinks that later on also the new Board of Messerschmitt will agree that it would be best to assign all rights in question to Singer and to [fol. 5385] let them take the necessary steps for prosecuting the applications and pay the money for maintaining the rights (!).

Very truly yours, by Ernest Wiegand.

1 copy

c.c. SNAG, Frankfurt-Main 1.

[fol. 5386] In United States District Court

Defendant's Exhibit 95

Translation

Hamburg, October 17th, 1957.

Memorandum for File

Conference at Frankfurt/Main on October 14th, 1957 between Mr. Waterman, Mr. Stanford, the chief of the Patent Department of The Singer Manufacturing Company, Patent Agent Dipl.-Ing. R. Busselmeier, Augsburg, Mr. Kruger (who was absent for some time) and Patent Agent Dipl.-Ing. W. Niemann.

I

The firm Messerschmitt which up to now has been occupied with the manufacture of cabin scooters, the production of sewing machines, and the production of aeroplanes will

probably separate these three different lines of manufacture, respectively has already started on this. The main activities of the Messerschmitt works will be in future in the field of the manufacture of aeroplanes. According to Patent Agent Busselmeier the branch which has been building cabin scooters has already been separated and the sewing machine section is also likely to be separated.

Negotiations which have been going on in the meantime [fol. 5387] have shown that Singer is interested to acquire the important foreign applications and also the German patent application relating to the new sewing machine of Messerschmitt, after the corresponding US-application has already been assigned to Singer by way of agreement.

The previous negotiations which have been conducted comparatively loosely have not had any tangible result so far, were to lead, however, to Singer taking over also the aforesaid foreign applications and the German application, and giving for same to the firm Messerschmitt a royalty-free license to co-use the subject matter of the applications in the eight countries and in all other countries of the world.

The discussion shows that there does not exist yet complete clearness on the modalities of the transfer of the rights of the firm Messerschmitt to Singer, and these points were determined in detail during the conference.

For this purpose Patent Agent Busselmeier handed at the beginning a list of the foreign applications corresponding to the German application and states the amount of $2.000 as the costs which have been caused up to now for the applications per country. This amount is called by us to be very high, Mr. B. replies that also certain development costs at Messerschmitt's are contained in these $2.000. [fol. 5388] It is argued on our part repeatedly that a sum of DM 8.000,— must appear very high as weight of costs for patent applications, for even with voluminous applications these costs would be within about DM 2.000,—.

It is pointed out by us that the following facts must be compared with this price:

a) It is open yet, whether and to what extend patents will be granted in the various countries (in particular in those countries in which an examination for novelty is made).

b) Singer must take over the additional costs for the grant of the protection rights.
c) Singer must pay the annuities and
d) Singer must also prosecute possible infringements.

In consideration of these facts it is proposed that Singer will only pay a total amount of $8.000 instead of a price of $16.000 (8 x $2.000).

Mr. Stanford had in the meantime put forward a draft of an agreement in which some points are missing yet, however. At first the modalities of the acquisition of the rights by Singer according to a first draft are debated on and the following discussed in doing so.

1. Messerschmitt is to be entitled to make an agreement for an exclusive license with one *sole* licencee in each one of the countries concerned with the condition that this licencee does not have the right to grant sublicenses.
[fol. 5389] 2. The exclusive licencee is entitled to make and sell sewing machines according to the corresponding patent application in the respective country, an export of machines from that country is, however, not permitted.
3. In case Messerschmitt should have made an agreement of this kind regarding an exclusive licence with a licencee in a country, Messerschmitt looses the right to export machines into that country.
4. Messerschmitt is entitled to make an agreement with the exclusive licencee to the effect that the exclusive licencee also exports the machines in question from his country into one or several other of the eight countries. In such a case Messerschmitt is, however, bound not to export any machines into that respective country or into the respective countries, and furthermore Messerschmitt is not entitled to make any agreement for either a nonexclusive or for an exclusive license for the respective country (i.e. the country into which the machines have been imported by the exclusive licencee of another country).
[fol. 5390] During an interval of the conference in which the gentlemen Waterman and Stanford had an appointment regarding a different matter, the above mentioned principles were drafted and translated into English by Patent Agent Niemann and Patent Agent Mr. Busselmeier.
When the gentlemen returned from their meeting and

read over the wording of the above statements, Mr. Waterman made the objection that the way proposed would under no circumstances be acceptable, because this wording would mean a clear infringement of the anti-trust-law in USA. It was tried then to find a more simple wording of the above mentioned points or to fix this wording without it becoming expressly contents of the agreement to be made. But against this too Mr. Waterman has apprehensions, because such agreements must be made complete and according to the truth and because he would, when questioned on the completeness of the agreement, not be able to declare with a good conscience that no additional arrangements have been made.

II

During the conference in the forenoon the question had also been raised whether the legal transfer of the applications (inclusive of the German application) to Singer could [fol. 5391] be made on a different basis, and in this connection the following was discussed:

1. Messerschmitt assigns to Singer the foreign applications and Messerschmitt is given the right to export machines with the characteristics of these applications for each royalty-free into the respective country.

2. Messerschmitt renounces to making any license agreement in any of the countries named.

3. The question is discussed whether the German application could also be transfered because it should make no difference to Messerschmitt whether it manufactures in Germany according to the own application or patent, or manufactures royalty-free according to the application or patent and transfers the right to the German application to Singer.

4. Then the question is talked about whether in case of such an agreement a total amount of $25,000 would be considered acceptable by the firm Messerschmitt.

5. In this connection Patent Agent Busschueier mentions that the firm Messerschmitt has already been in contact regarding this with a firm in one or two countries and that this firm would pay to Messerschmitt an amount which exceeds considerably the amount of $25,000, in this case would, however, the detailed constructional draw-

[fol. 5392] ings have to be placed at the disposal of the licencee and likewise engineers to start the manufacture in the country in question. Patent Agent Busselmeier agreed, however, to use his influence with his client that the amount of $25.000 is a reasonable remuneration.

6. The question of recompense of the inventor is likewise discussed in this connection. Patent Agent Busselmeier mentions that this question has so far not been definitely settled yet with the inventor, neither for Austria nor for Germany. Singer expresses the opinion that this question is a matter of Messerschmitt.

For the conclusion of an agreement on this general basis, Patent Agent Busselmeier and Patent Agent Niemann have during the absence of Mr. Waterman and Mr. Stanford drawn up a supplement to the draft of an agreement of Mr. Stanford which contains essentially the following points:

a) Messerschmitt is not entitled to make any license agreement in one of the eight countries but its rights are limited to the manufacture and selling of the machines in Germany and to the selling of the machines into the respective countries.

b) Messerschmitt is, however, given the right in case of giving up the (this!) business in its entirety to transfer this right of use to the buyer.

c) As remuneration Singer makes one payment of an amount of $25.000.

[fol. 5393] This version of the agreement is discussed in detail after the first version and meets in principle with the approval of Mr. Waterman, although according to his view the price of $25.000 must be considered as relatively high in this connection.

III

In connection with the proposition II there is furthermore discussed the question whether an option should be given to Singer regarding the acquisition of the business in case Messerschmitt should give up the sewing machine business altogether. This is per se not of any special interest to Singer, seeing that Singer has the right to

manufacture and sell its own machines according to the patent applications or patents. There is furthermore discussed the question whether the right to transfer the right of use of Messerschmitt should be included in the agreement.

The concluding discussion of these two points had the result that there points should not be included in the agreement but that this transfer and the option should be mentioned in a letter of confirmation between the patent agents.

IV

The conference resulted in the following:

Patent Agent Niemann is instructed to send the agreement of which a draft of Mr. Stanford is existent to [fol. 5394] Singer in taking into consideration the proposition made above under II. Singer will then say, whether this agreement answers its wishes. As soon as the agreement will have such a form that Singer is prepared to sign it, this agreement is to be sent to Patent Agent Mr. Busselmeier as a draft. Patent Agent Busselmeier will submit this agreement to the Board of Directors of Messerschmitt and advise, whether Messerschmitt accepts the agreement in this form. In the affirmative Messerschmitt will sign the two copies. The two copies will be sent to Singer who will return then one signed copy to Busselmeier.

It is furthermore agreed that Patent Agent Busselmeier once more checks the list of foreign applications and confirms to Patent Agent Niemann that the particulars stated in this list inclusive of the German application are correct.

sgd. Patent Agent Niemann.

[fol. 5395] IN UNITED STATES DISTRICT COURT

DEFENDANT'S EXHIBIT 96

Agreement

Agreement dated as of —, 1957 between The Singer Manufacturing Company, hereinafter called "Singer", a corporation organized and existing under the laws of the State of New Jersey, United States of America, and Messerschmitt A.G., hereinafter called "Messerschmitt", a corporation organized and existing under the laws of the Federal Republic of Germany, for them and their respective assignees and successors.

Whereas, Messerschmitt is the sole owner, by virtue of assignments from Willy Messerschmitt and Kurt Brandt, of certain patents and patent applications and the inventions claimed therein, which patents and patent applications are hereinafter called "Subject Patents and Applications" and are noted below:

1. Patent Application in Germany No. M 25 287 VII 52a "Zigzag sewing machine with ornamental stitch automatic" and Petty Patent Application (Gebrauchsmusterhilfsanmeldung) M 17043 52a Gm

   Filing Dates: 25th November, 1954

   Applicant: Messerschmitt AG.

2. Patent in Italy No. 530 381

   "Zigzag sewing machine with ornamental stitch automatic"

   Filing Date: 14th March, 1955

   Granted: 8th July, 1955

   Priority: 25th November, 1954 from M 25 287 VII 52a

   Owner Messerschmitt AG.

Copy of this agreement sent to MLW 1/7/58

[fol. 5396] 3. Patent of Addition in Italy No. 566985 Addition to Italian Patent No. 530 381

"Zigzag Sewing Machine with Ornamental Stitch Automatic"
Filing Date: 28th June, 1956
Granted: 28th September, 1957
Priority: 13th July, 1955
Applicant: Messerschmitt AG.

4. Patent in Belgium No. 543 073

"Zigzag Sewing Machine with Ornamental Stitch Automatic"
Filing Date: 24th November, 1955
Granted: 15th December, 1955
Priorities: 25th November, 1954 from M 25 287 VII 52a 13th July, 1955
Owner: Messerschmitt AG.

5. Patent Application in the Netherlands No. 202 236 Ned. "Zigzag Sewing Machine with Ornamental Stitch Automatic"

Filing Date: 22nd November, 1955
Priorities: 25th November, 1954 from M 25 287 VII 52a 13th July, 1955
Applicant: Messerschmitt AG.

6. Patent Application in Switzerland No. 26511 "Zigzag Sewing Machine with Ornamental Stitch Automatic"

Filing Date: 14th November, 1955
Priorities: 25th November, 1954 from M 25 287 VII/52a 13th July, 1955
Applicant: Messerschmitt AG.

7. Patent Application in Great Britain No. 33 932/55 "Zigzag Sewing Machine with Ornamental Stitch Automatic"

Filing Date: 25th November, 1955
Priorities: 25th November, 1954 from M 25 287 VII 52a 13th July, 1955
Applicant: Messerschmitt AG.

[fol. 5397] 8. Patent Application in Austria No. A 6266 55 "Zizgaz Sewing Machine with Ornamental Stitch Automatic". Filing Date: 14th November, 1955. Priorities: 25th November, 1954 from M 25 287 VII 52a 13th July, 1955.

Applicant: Messerschmitt AG.

9. Patent Application in Sweden No. 10 533 1955 "Zigzag Sewing Machine with Ornamental Stitch Automatic". Filing Date: 22nd November, 1955 Priorities: 25th Novmber, 1954 from M 25 287 VII/52a 13th July, 1955

Applicant: Messerschmitt AG.

10. Patent in France No. 1 139 759 "Zigzag Sewing Machine with Ornamental Stitch Automatic" Filing Date: 24th November, 1955. Granted: 18th February, 1957. Priorities: 25th November, 1954 from M 25 287 VII 52a 13th July, 1955

Owner: Messerschmitt AG.

Whereas, Singer is the sole owner, by virtue of an assignment from Messerschmitt dated June 4, 1957, of United States patent application Serial No. 548,481 filed November 22, 1955, and the inventions claimed therein, which application corresponds to each of the Subject Patents and Application!

Whereas, Singer is desirous of acquiring the entire right, title and interest in and to each of the Subject Patents and Applications, in and to the inventions claimed therein, in and to any and all patents which may correspond thereto and in and to any and all extensions, divisions or reissues of such patents.

[fol. 5398] Whereas, in accordance with an agreement dated as of June 4, 1957, between Singer and Messerschmitt, Messerschmitt has an irrevocable, nontransferable, nonexclusive, and royalty-free license to manufacture and sell in the United States sewing machines of the type as disclosed and or claimed in the Singer-owned United States patent application No. 548,481 and as disclosed and or claimed in any United States patents which may be granted therefor.

Whereas, Messerschmitt is desirous of acquiring from Singer, in return for the assignment to Singer of the subject Patent and Applications a nonexclusive, nontransferable and without privilege of sublicensing and royalty-free license to manufacture and sell in all countries of the world sewing machines of the type as disclosed and or claimed in the Subject Patents and Applications, as disclosed and or claimed in any and all patents which may correspond thereto and as disclosed and or claimed in any and all extensions, divisions or reissues of such patents.

Now, Therefore, in consideration of the premises Singer and Messerschmitt agree as follows?

(1) Messerschmitt hereby sells, assigns and sets over unto Singer, its successors and assignees the entire right, title and interest in and to each of the Subject Patents and Applications, in and to the inventions disclosed and or claimed therein, in and to any and all patents which correspond thereto and in and to any and all extensions, divisions and reissues of said patents, the same to be held and enjoyed by Singer for its own use and the use of its successors and assignees, to the full end of the terms for [fol. 5399] which said patents may be granted, as fully and entirely as the same would have been held and enjoyed by Messerschmitt had this assignment and sale not been made.

(2) Singer hereby grants unto Messerschmitt an irrevocable, nontransferable and without privilege of sublicensing, nonexclusive and royalty-free license to manufacture and sell in all countries of the world sewing machines of the type disclosed and or claimed in the Subject Patents and Applications, as disclosed and or claimed in any and all patents which may correspond thereto and as disclosed and or claimed in any and all extensions, divisions or reissues of such patents.

(3) Singer hereby agrees that it shall use its best efforts to prosecute before the respective patent offices each of the patent applications which comes within the terms of this agreement for the purpose of acquiring, if possible, good and valid patents therefor.

(4) Singer hereby agrees to pay to Messerschmitt the sum of $25,000 (twenty five thousand dollars) for acquiring the entire right, title and interest in and to each

of the Subject Patents and Applications and in and to the inventions disclosed and/or claimed therein and to any and all patents which may correspond thereto and in and to any and all extensions, divisions or reissues of such patents within the terms of this agreement.

(5) Singer and Messerschmitt agree that the provisions of the two agreements dated as of April 16, 1957 and as of June 4, 1957 between Singer and Messerschmitt shall remain unaltered.

[fol. 5400] In Witness Whereof, the parties have executed this agreement as of the ~~day~~ and year written above.

The Singer Manufacturing Company, By ——, ——,
Vice President.

Witness:
——, ——.

Messerschmitt A.G., By ——, ——.

[fol. 5401] IN THE UNITED STATES DISTRICT COURT

DEFENDANT'S EXHIBIT 97

Received Patent Department, February 5, 1958, Answered February 13, 1958

L. Adamson
Frankfurt Am Main
Gutleutstrasse 42-44
Singer-Haus

January 30th, 1958.

J. G. Stanford, Esq.
The Singer Manufacturing Company
Patent Department
Elizabethport F., N.J.

Dear Mr. Stanford,

Re.: Agreement Between Messerschmitt A.G. and The Singer Manufacturing Company (Foreign Patents)

I beg to acknowledge receipt of your telegram of 28th inst. running as follows:

> Reurletter 24 January We Agree to Purchase Patents Without Business Under Modified Busselmeier Plan if Patent Owner Agrees Send us Copy of Agreement for Approval
>
> J G Stanford Patent Department.

As Mr. Niemann is away from Hamburg this week we phoned with Mr. Busselmeier after we had drafted a new paragraph for the agreement and read it out to him on the phone asking him whether same would be satisfactory. Mr. Busselmeier affirmed this and declared that it is not necessary to also include in the agreement the other items of the supplementary understanding, viz. about the option of Singer to purchase the sewing machine business and about the costs of the transfer of the foreign patents and patent applications.

We were not quite certain whether the request made in your telegram to send you copy of agreement for approval

if patent owner agrees, meant that you first wanted to see the modified agreement after its wording had been accepted by Messerschmitt, be it for reasons which have to do with regulations over there or other grounds not known to us.

We therefore also got in touch with Mr. Waterman, who likewise thought the wording in order but suggested that we should phone to you to make sure that it would be in order if we had the re-written pages 5 and 6 for the agreement including the additional paragraph, which we had numbered "2a", sent to Mr. Busselmeier so that he could try without delay to get the modified agreement signed by the directors of Messerschmitt, instead of first asking them [fol. 5402] whether they agree with the wording and then send it to you for approval, thus loosing time, in which they might change their mind again if there should be any new developments.

I have been pleased to learn from to-day's telephone conversation between you and Mr. Krüger that you approve of the wording of paragraph 2a as read out to you and of its immediate submission to Messerschmitt included in the re-written pages 5 and 6 for the agreement.

We accordingly have at once given written instructions to the office of Dr. Wiegand and Mr. Niemann to send the pages 5 and 6 re-written on the same paper as used for the original draft this week yet to Mr. Busselmeier and not to await the return of Mr. Niemann to Hamburg, advising them at the same time that we had informed Mr. Busselmeier over the telephone that he would get the re-written pages at once from your patent agents.

Enclosed please find a copy of the pages 5 and 6 which we sent to the office of your patent agents at Hamburg, including the paragraph 2a as read out to you.

A like copy has been sent to Mr. Waterman to-day.

I hope that the endeavors of Mr. Busselmeier to get the modified agreement signed will be successful in the near future and shall advise you as soon as we hear anything further.

Yours very truly, L. Adamson.

Enclosure: pages 5 and 6 (modified)

cc. Mr. M. L. Waterman, New York
cc: Mr. M. L. Waterman, Zurich

[fol. 5403] * * * of such patents.

Now, Therefore, in consideration of the premises Singer and Messerschmitt agree as follows:

(1) Messerschmitt hereby sells, assigns and sets over unto Singer, its successors and assignees the entire right, title and interest in and to each of the Subject Patents and Applications, in and to the inventions disclosed and/or claimed therein, in and to any and all patents which correspond thereto and in and to any and all extensions, divisions and reissues of said patents, the same to be held and enjoyed by Singer for its own use and the use of its successors and assignees, to the full end of the terms for which said patents may be granted, as fully and entirely as the same would have been held and enjoyed by Messerschmitt had this assignment and sale not been made.

(2) Singer hereby grants unto Messerschmitt an irrevocable, nontransferable and without privilege of sublicensing, nonexclusive, and royalty-free license to manufacture and sell in all countries of the world sewing machines of the type disclosed and/or claimed in the Subject Patents and Applications, as disclosed and/or claimed in any and all patents which may correspond thereto and as disclosed and/or claimed in any and all extensions, divisions or reissues of such patents.

(2a) In case Messerschmitt should sell the sewing machine business in its entirety Singer will grant unto the pur-[fol. 5404] chaser the same irrevocable, nontransferable and without privilege of sublicensing, nonexclusive, and royalty-free license as granted unto Messerschmitt according to the above paragraph (2).

(3) Singer hereby agrees that it shall use its best efforts to prosecute before the respective patent offices each of the patent applications which comes within the terms of this agreement for the purpose of acquiring, if possible, good and valid patents therefor.

(4) Singer hereby agrees to pay to Messerschmitt the sum of $25,000 (twenty-five thousand dollars) for acquiring the entire right, title and interest in and to each of the Subject Patents and Applications and in and to the inventions disclosed and/or claimed therein and to any and all patents which may correspond thereto and in and to any

and all extensions, divisions or reissues of such patents within the terms of this agreement.

(5) Singer and Messerschmitt agree that the provisions of the two agreements dated as of April 16, 1957 and as of June 4, 1957 between Singer and Messerschmitt shall remain unaltered.

In Witness Whereof, the parties have executed this agreement as of the day and year written above.

The Singer Manufacturing Company, By ——, ——, Vice President.

Witness:

——, ——.

Messerschmitt A.G., By ——, ——.

[fol. 5405] IN UNITED STATES DISTRICT COURT

DEFENDANT'S EXHIBIT 114B

BORLETTI 1102 super-de luxe-automatic

instruction book

EXHIBIT
U. S. Dist. Court
S. D. of N. Y.
JUN 2 0
DEFENDANT'S
114 13

[fol. 5406]

INSTRUCTION BOOK

BORLETTI 1102

SUPER - DE LUXE - AUTOMATIC

[fol. 5407]

Congratulations

You are now the proud owner of a machine
that is ***the ultimate***
in technological advancement.
Light in weight
yet full size and sturdy,
this sewing machine places
a limitless variety of stitching effects
at your finger tips.
Your new machine has
many entirely new built-in features
that you will
easily become familiar
with by reading
these step-by-step instructions.
This knowledge of your new machine
will allow you
to enjoy fully
the pleasure and satisfaction
of sewing with it.

[fol. 5408]

Features of the BORLETTI 1102 *Super*

1 Hanging needle bar and connecting rod with flexible joint.

2 Link take-up lever.

3 Special nylon gear driven hook, reducing noise.

4 The hook position allows the fitting of double and triple needles for parallel stitching and ornamental work.

5 The very large sliding plate provides easy access to the bobbin case.

6 The built-in bobbin winder—concealed when not used—adds to the simplicity and beauty of the styling.

7 Feed dog mechanism easily dropped with spring-loaded return action.

8 Clean simple lines .... acclaimed by everyone as the most beautiful sewing machine in the world.

9 The controls are grouped on a panel. They are well placed from both the esthetic and practical standpoint, as all controls will be found just where they are needed, and their accessibility gives an unusual ease of control.

10 The top cover slips off easily, exposing all parts for quick and easy oiling.

11 Built-in thread cutter snips threads cleanly and evenly and holds the right amount of thread ready for the next stitch.

12 Exclusive hinged based lamp spotlights your work eliminating any possibility of eye strain.

De Luxe Automatic Zig-zag Sewing Machine

13 The electric motor is built-in, easily accessible—yet out of sight.

14 The simple speed control is faster, more accurate, and istantly adjusts to your choice of speeds.

15 Round stitch length control knob with automatic reverse lever for back tacking.

16 A simple shift of a lever will change from zig-zag, to automatic, or to straight stitching without stopping the machine.

17 When you are doing straight sewing the zig-zag and automatic mechanisms are disengaged (actually out of gear) thereby reducing wear.

18 Instantaneous control of the width of your designs—even while the machine is running—is particularly useful when sewing with two needles.

19 Finger-tip control of cams by spring-clip action provides for quick and easy cam change.

20 All automatic devices and reversing mechanisms are completely built-in, providing an infinite variety of designs of elegance and distinction.

21 The automatic cloth movement control permits you to change from one decorative stitch to another without changing cams.

22 Each single cam will produce 16 different decorative stitches—but, when used conjunctively in the front and in the back, an endless variety of designs are achieved.

5 *Automatic Sewing*

The automatic sewing machines can be classified in two different categories: The first being those in which the needle only can be automatically controlled (similar to our Model 1101), and the second being those superautomatics (similar to our Model 1102) in which both the needle and the feed-dog can be automatically controlled. The plain automatics are capable of executing decorative stitches similar to the following ones, in which the material will forward only.

The superautomatics can, in addition, produce drawings like the following, in which the material has to move both backwards and forwards:

The No. 1102 super deluxe automatic is, moreover, one of the few machines in the world that can also execute automatically some of the most intricate designs of outstanding beauty, such as:

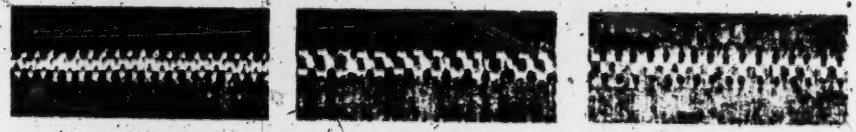

The most amazing feature of this machine is that every single cam produces over sixteen different decorative stitches; but, when used conjunctively in the front and back of the machine, every two cams will produce as many as 156 different patterns.

The cloth movement control will change your patterns, both in rhythm and in form—and without changing the cams—to an extent where every one of the sixteen cams delivered with the machine will produce thousands of beautiful patterns.

[fols. 5450-5467]

NOTE: Jobs that can be made with the automatic control of the needle:

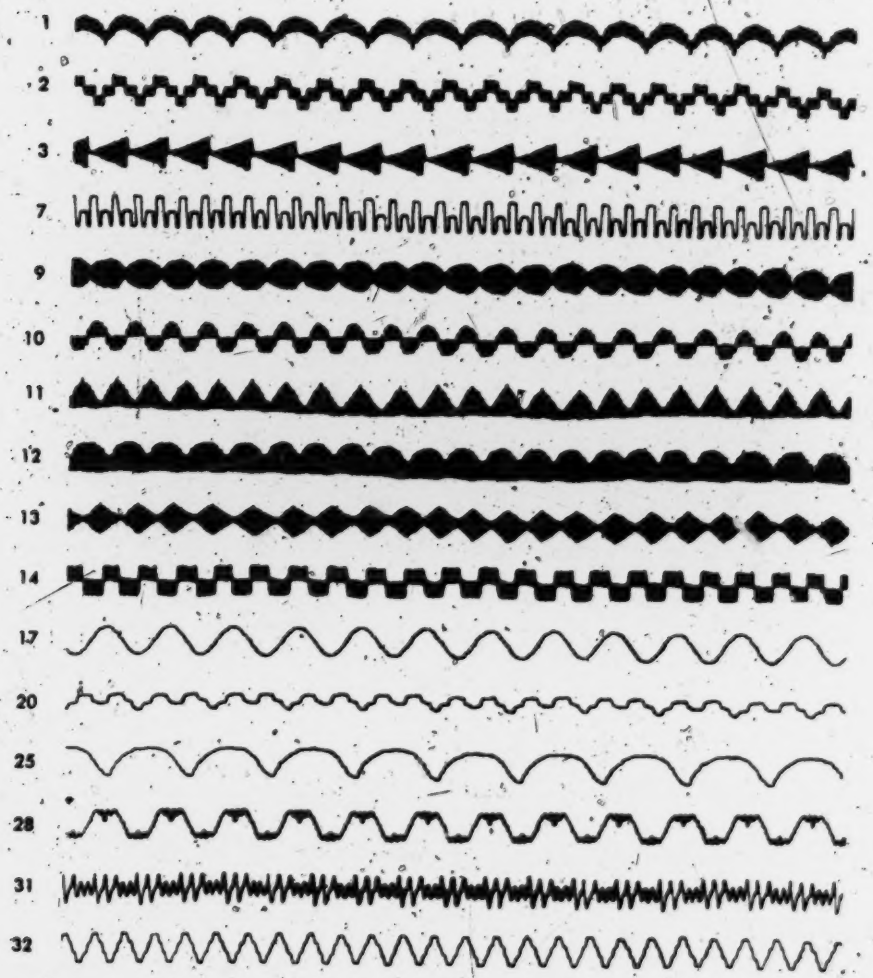

SUMMARY: The jobs made with the automatic control of the needle are classified by the following variations:

A	Variations due to can changes.
B	Variations due to the knob □.
C	Variations due to the red button.
D	Variations due to the gray button.

[fols. 5468-5499] In United States District Court

Defendant's Exhibit 119

Patent Notice Employed by Singer on Its 401 Machine Commencing with the Year 1958

This sewing machine has exclusive features which are manufactured under issued and pending United States patents, including one or more of the following issued patents:

2,394,510	2,448,500	2,617,375	2,706,956	2,788,759
2,394,511	2,450,837	2,677,042	2,710,949	2,832,302
2,444,826	2,478,551	2,705,055	2,781,012	2,833,235
		D-180,373		

The Singer Manufacturing Company, Elizabeth, New Jersey, U.S.A.

[fols. 5500-5508] In United States District Court

Defendant's Exhibit 124

In the United States District Court for the Southern District of New York

Civil Action No. 133-350

The Singer Manufacturing Company, Plaintiff,

vs.

Brother International Corporation, Defendant.

Defendant's Motion For Stay

Now comes the defendant Brother International Corporation, by its attorneys, and moves this Court for an order staying all further proceedings in this action pending notice of the decision by this Court in a co-pending action entitled, *United States of America* v. *The Singer Manufacturing Company, Civil Action* No. 154-108, wherein the present plaintiff is defendant.

• • • • • • •

[fols. 5509-5537] Exhibit A

United States Tariff Commission
Washington
Public Information

For release January 12, 1960.

Tariff Commission Postpones Decision in Sewing Machines Investigation,

The United States Tariff Commission has decided to hold in abeyance its decision on the merits in the investigation instigated by the Singer Manufacturing Company under section 337 of the Tariff Act of 1930, pending the outcome of an antitrust action filed by the Department of Justice against Singer on December 22, 1959 in the United States District Court for the Southern District of New York.

Singer filed a complaint with the Tariff Commission alleging unfair methods of competition and unfair acts in the importation of certain foreign manufactured automatic zigzag sewing machines, principally from Japan, in violation of section 337. The Commission conducted an investigation and held extensive hearings in connection therewith. The charge of unfair import practice was predicated on the importation of automatic zigzag sewing machines, principally from Japan, that were alleged to have been made in accordance with the invention disclosed in the Singer-owned "Gegauf" patent, a United States patent which had been assigned to Singer by Gegauf, a Swiss citizen. If the Commission should find in favor of Singer, it would recommend to the President that he exclude imports of the patented machines from entry into the United States.

In the antitrust action against Singer, the Department of Justice charges, among other things, that Singer entered into arrangements with Gegauf and an Italian sewing-machine manufacturer whereby Gegauf would assign his patent rights to Singer for the purpose of enabling Singer to prevent Japanese imports; that Singer would use the Gegauf patent rights along with its own to exclude imports, and the parties would determine which European

manufacturer would be permitted to export household automatic zigzag sewing machines to the United Sates; and that Singer, in carrying out the attempt to monopolize, obtained and used patent rights for these exclusionary purposes.

[fol. 5538] IN UNITED STATES DISTRICT COURT

DEFENDANT'S EXHIBIT 127

Received Patent Department, August 14, 1959, Answered August 20, 1959

The Singer Manufacturing Co.
Singer Building
149 Broadway
New York 6, N.Y.
Division of Research

In Replying Please Refer to TK:V7

August 13, 1959.

J. G. Stanford, Esq.,
Elizabethport, New Jersey.

Dear Mr. Stanford:

Husqvarna Automatic Class 21A (Improved)—Examination

We are forwarding to you a recently purchased improved variety of Husqvarna automatic machine, Class 21A, Serial No. M18359. It appears the improvements consist of a new take-up housing, a one-turn upper thread tension knob, a graduated knob for stitch length control, a push button knob for reverse sewing, a stop limiting the zigzag bight, a quick presser bar release and a reduction gear knob causing the machine to sew at about 1/5 of its normal speed. The machine also features some parts made of powdered metal.

After you have had an opportunity to examine the machine, kindly advise Mr. Waterman of your findings and forward the machine to Mr. King for research evaluation.

Very truly yours, The Singer Manufacturing Co.,
T. Krzyzaniak.

Lefter in triplicate.

CC: Mr. W. King.

[fol. 5539] IN UNITED STATES DISTRICT COURT

DEFENDANT'S EXHIBIT 128

August 20, 1959.

M. L. Waterman, Esq., Vice-President,
The Singer Manufacturing Company,
Singer Building, New York.

Dear Mr. Waterman:

Husqvarna Automatic Class 21A (Improved) Zigzag Machine Made in Sweden. (Serial No. M18359).

We have received Mr. Krzyzaniak's letter of August 13, 1959, TK:V7, together with a specimen Husqvarna machine identified above.

We have examined this machine and determined that it infringes claims of each of the three Singer-owned patents identified below:

U.S. No. 2,832,302, Apr. 29, 1958, Gegauf,
U.S. No. Re.24,370, Oct. 8, 1958, Harris,
Canadian No. 552,072. Jan. 21, 1958, Harris

Singer owns no other patents, United States or foreign, which would be infringed by this machine.

Since this machine infringes the claims of Gegauf patent No. 2,832,302, it would be barred from entry into the United States in the event that we are fortunate enough through our Tariff Action to acquire a Presidential exclusion order based upon such Gegauf patent.

As requested, we are sending this machine on to Mr. Walter King.

Yours very truly, The Singer Manufacturing Company, ——, ——, Patent Department.

In triplicate.

Machine sent to W. King 8/20.

[fol. 5540] IN UNITED STATES DISTRICT COURT

DEFENDANT'S EXHIBIT 129

Milan, 22nd June 1955.

J. G. Stanford, Esq.,
The Singer Manufacturing Co.,
Patent Department
149 Broadway
New York, 6

Dear Sir,

Italian Patent Law

On receipt of your letter (ref.Caw-z) of June 16th, which had our most careful attention, we are pleased to give you our views on the subject as follows.

Once a patent has been obtained in Italy, it is not possible to bring any additions to it, even if only of an interpretative nature. Should a dispute be taken to Court, a statement covering the various reasons and integral explanations relative to the patent can be submitted to the Magistrate.

On the other hand, as you know that the granting of a patent in Italy is not subordinate to an examination of its technical novelty, a more or less accurate or complete description of a claim has relative importance because whatever is new and revealed by the patent is considered by Law as fully protected, independently from the claim.

In other words, if, for example, the drawings pertaining to a patent show without the slightest doubt a new device, its protection can be called for in Court and, if recognized, cannot be subsequently patented by others.

If we can therefore demonstrate that a patent belonging to the Company and issued before January 28, 1953, gives a graphic or written description of the device we are interest in (even if specific request for protection was not included in the application) the Company would be in a position of privilege towards competition, privilege which the technical aspect of the problem can best evaluate.

Yours very truly, ——, ——.

CC: Mr. M. L. Waterman

[fol. 5541] IN UNITED STATES DISTRICT COURT

DEFENDANT'S EXHIBIT 130

air mail

November 28, 1956.

Mr. Charles D. Reed, General Manager,
Singer Sewing Machine Company,
Management Office,
Caixa Postal 1624,
Rio de Janeiro, Brazil.

Dear Mr. Reed:

Opposition to Brazilian Patent Application No. 67,354 of Brutsch & Co.—Sewing Machine with Zigzag Device.

We thank you for your letter of November 19, 1956, 560/File 495-C(4), quoting a letter received from our Brazilian attorneys with reference to the above noted application which was allowed over our opposition.

Enclosed with your letter was an English translation of the Brazilian Patent Office's notice in which it was stated that the subject application was allowed over our opposition. You have asked us whether an appeal from this decision should be made.

Throughout this entire opposition proceeding the Brazilian Patent Office has apparently not seen fit to furnish our Brazilian attorneys with any information concerning the briefs filed by the applicant or the explicit grounds on which our opposition was refused. Under these circumstances, it would be difficult to file an intelligent ap-[fols. 5542-5544] peal brief.

In view of all those circumstances and particularly in view of the fact that one can apparently bring a nullity proceeding against a Brazilian patent at any time throughout the life of such patent, we have decided not to continue the present opposition proceeding by filing an appeal from this recent Patent Office decision. Furthermore, since the Patent Office decision appeared to be completely arbi-

trary we suspect that we would have little if any chance to reverse this decision before the same tribunal by way of an appeal.

Yours very truly, The Singer Manufacturing Company, ——, ——, Patent Department.

CC: Mr. M. L. Waterman

Latin American Dept.

[fol. 5545] IN UNITED STATES DISTRICT COURT

DEFENDANT'S EXHIBIT 131

In The United States Patent Office
Division 24

In re application of Messerschmitt Et Al

Serial No.: 548,481
Filed: November 22, 1955
For: Zig-Zag-Type Sewing Machine With Automatic Means for Machine-Made Decorative Effects

Letter

Hon. Commissioner of Patents, Washington 25, D. C.

Sir:

Will you kindly advise the date upon which the above-entitled patent application became abandoned?

Respectfully submitted, Messerschmitt Et Al, By Chester A. Williams, Attorney.

[fol. 5546] IN UNITED STATES DISTRICT COURT

DEFENDANT'S EXHIBIT 132

U. S. Department of Commerce
Patent Office
Washington

Mailed May 9, 1961, Patent Division 24

Received Patent Department, May 10, 1961, Answered—
Joel G. Stanford
% The Singer Mfg. Company
Patent Department
149 Broadway
New York 6, New York

Applicant: Willy Messerschmitt et al.
Ser. No.: 548,481
Filed: November 22, 1955
For: Zizgaz-Type Sewing Machine With Automatic Means for Machine-Made Decorative Effects

Please find below a communication from the Examiner in charge of this application.
David L. Ladd, Commissioner of Patents.

Responsive to letter filed May 9, 1961.
This application became abandoned on May 4, 1961 for failure to prosecute within the six month statutory period from the last Office action. See Rule 135 of the Rules of Practice.

Examiner.

[fol. 5547]

IN UNITED STATES DISTRICT COURT

DEFENDANT'S EXHIBIT 133

	Singer-Vigorelli License Agreement	Singer-Gegauf License Agreement
License Provisions	**Vigorelli** will not bring any infringement action against Singer under the rights derived from patents now issued or to be issued in any country with respect to the subject matter disclosed in U.S. patents No. 2.693.778 and in the U.S. patent applications by Johnson, Serial No. 471.766, and by Perla, Serial No. 386,684, and when embodied in sewing machines manufactured and sold by Singer, copies of which are at disposal for inspection by Vigorelli at the Office of Messrs. Barzano and Zanardo in Milan. **Singer** will not bring any infringement action against Vigorelli under the rights derived from patents now issued or to be issued in any country with respect to subject matter disclosed in Italian patents No. 497.557 and No. 507.862 and when embodied in sewing machines manufactured and sold by Vigorelli.	Gegauf undertakes not to attack Singer, either directly or indirectly, in any country, on the basis of any of its above-mentioned patents or patent applications. Singer undertakes not to attack Gegauf, either directly or indirectly, in any country: a) on the basis of any of its above mentioned patents or patent applications b) for the present construction of the Bernina sewing machine as shown on the photograph attached to the present agreement and signed on the back by both parties Singer undertakes not to manufacture or sell a construction which would be a slavish copy either of the present construction of the Bernina Sewing Machine—taken as a whole—which is shown on the attached photograph, or of the feeler and multiple cams mechanism the said Bernina construction includes
Opposition and Nullity Provisions	Each of the two parties mutually agree not to institute any opposition, nullity or invalidation proceedings in any country against or otherwise to attack each other's above-noted patents or patent applications and immediately to withdraw any such proceedings if it has already been instituted,	Singer and Gegauf each undertakes not to do anything, either directly or indirectly and in any country, the result of which might restrict the scope of the claims of the other party relating to the subject matter of the above mentioned patents and patent applications.
Interference and Conflict Provisions	provided, however, that if such two parties patents and patent applications are or have become involved in a patent office priority-determining proceedings such as a United States interference or a Canadian conflict proceeding, then both parties will work together in order to settle such a proceeding in accordance with the laws and regulations of the patent office concerned and in the spirit of this agreement.	Singer and Gegauf each undertakes, in accordance with the laws and regulations of the Patent Office concerned, to facilitate the allowance in any country of claims as broad as possible, as regards the subject matter of the patents and patent applications referred to above.

Singer-Messerschmitt
License Agreement

Messerschmitt

Will not bring any infringement action against Singer under the rights derived from patents now issued or to be issued in any country, with respect to subject matter disclosed in Singer's German patent applications No. S.46,453 VII/52a as filed on 23rd November, 1955, and shown in the annexed drawing (Figures 1–62) and No. S.46,580 VII/52a as filed on 2nd December, 1955, and shown in the annexed drawings (Figures 1–13) and when embodied in sewing machines manufactured and sold by Singer.

Singer

will not bring any infringement action against Messerschmitt under the rights derived from patents now issued or to be issued in any country with respect to subject matter disclosed in the annexed drawings Kl. 52 KE of 14.1.55, Kl. 53 of 10.XII.54 and Kl. 54 KE of 6.VI.55, and when embodied in sewing machines manufactured and sold by Messerschmitt.

Singer and Messerschmitt each agrees not to institute in any country any opposition, nullity or invalidation proceedings against or otherwise to attack in any country the other's patents or patent applications corresponding to Messerschmitt's constructions as illustrated in the drawings indicated in paragraph 1 and to Singer's German applications indicated in paragraph 2, and to immediately withdraw any such proceeding if it has already been instituted

provided, however, that if such patents and patent applications are or have become involved in a patent office priority-determining proceedings such as a United States interference or a Canadian conflict proceeding, then both parties will work together in order to settle such proceeding in accordance with the laws and regulations of the patent office concerned and in the spirit of this agreement.

Defendant's Exhibit
133 for Identification

[fol. 5548] IN UNITED STATES DISTRICT COURT

DEFENDANT'S EXHIBIT 134

Singer Patents	Singer Machines Covered
Gegauf No. 2,832,302 Govern. No. 174 Swiss priority May 31, 1952 (S. 12) Filed in U.S. May 29, 1953 (¶ 87) Issued in U.S. April 29, 1958	401 Machine
Harris No. Re. 24,370 Govern. No. 172 U.S. filing date June 16, 1955 (S. 13) Issued in U.S. October 8, 1957 (¶ 87)	None
Johnson No. 2,862,468 Govern. No. 183 U.S. invention date April 29, 1953 (S. 14) U.S. filing date November 29, 1954 (¶ 87) Issued December 2, 1958	401, 319 and 320 Machines
Gegauf No. 2,877,726 Govern. No. 177 Swiss priority May 31, 1952 (S–16) Issued in U.S. March 17, 1959 (¶ 87)	319 and 320 Machines
Perla No. 2,810,360 Govern. No. 179 U.S. invention date May 10, 1954 (S–15) U.S. filing date December 8, 1954 (¶ 87) Issued October 22, 1957	319 and 320 Machines

[fol. 5549] IN UNITED STATES DISTRICT COURT

DEFENDANT'S EXHIBIT 135

Dates of License Agreements, Assignments and Conferences

1955	Jun.	Harris Patent Purchase Conference June 9th. Agreement executed June 10th.
	Jul.	
	Aug.	
	Sep.	
	Oct.	
	Nov.	Vigorelli Cross-License Agreement Conference November 16th and 17th. Agreement executed November 17th.
	Dec.	
1956	Jan.	
	Feb.	
	Mar.	
	Apr.	Gegauf Cross-License Agreement Conference April 12th and 14th. Agreement executed April 14th.
	May	Messerschmitt Cross-License Agreement Conference May 2nd. No agreement executed.
	Jun.	
	Jul.	
	Aug.	
	Sep.	Gegauf Purchase Conference September 23rd. No agreement executed. Messerschmitt Cross-License Conference September 24th. No agreement executed.
	Oct.	
	Nov.	
	Dec.	
1957	Jan.	
	Feb.	
	Mar.	
	Apr.	Messerschmitt Cross-License Conference and Agreement executed April 16th.
	May	
	Jun.	Messerschmitt Assignment executed June 4th.
	Jul.	
	Aug.	
	Sep.	
	Oct.	Gegauf Purchase Conference October 16th. No agreement executed.
	Nov.	Gegauf Purchase Conference November 15th. No agreement executed.
	Dec.	Gegauf Purchase Conference December 4th. Agreement executed December 5th.

[fol. 5552] IN UNITED STATES DISTRICT COURT

DEFENDANT'S EXHIBIT 138

Hotel Vier Jahreszeiten-Restaurant Walterspiel

Sunday

Just a line to let you know that we saw Gegauf and his entire staff. Gegauf wants a million marks for his patent, $250,000. Says Leon Strauss told him that it was a very valuable patent. Too bad but we didn't get it. See Busselmeier tommorrow.

___, ___.

Received Patent Department, September 26, 1958, Answered—___

[fol. 5550] In United States District Court

Defendant's Exhibit 136

ELEMENT NO.	MECHANICAL ELEMENTS OF GEGAUF PATENT No. 2,832,302 AS DESCRIBED IN CLAIM 1	ELEMENTS FOUND IN HARRIS CLAIMS ?	MECHANICAL ELEMENTS OF HARRIS REISSUE PATENT APPLICATION SERIAL No. 516,058 AS DESCRIBED IN CLAIM 22
INTRODUCTION	*An ornamental stitch sewing machine for selectively producing a plurality of different stitch patterns and comprising,*		*An ornamental stitch sewing machine for selectively producing a plurality of different stitch patterns and comprising,*
1.	*a hollow frame,*	YES	*a hollow frame,*
2.	*a needle pivotally carried by said frame and mounted for endwise reciprocation and for lateral swinging movements,*	YES	*a needle pivotally carried by said frame and mounted for endwise reciprocation and for lateral swinging movements,*
3.	*a rotary shaft mounted in said frame for reciprocating said needle,*	YES	*a rotary shaft mounted in said frame for reciprocating said needle,*
4.	*means for rotating said shaft,*	YES	*means for rotating said shaft,*
5.	*a series of rotary cams having different stitch patterns carried by said frame and mounted about a common axis,*	YES	*a series of rotary cams having different stitch patterns carried by said frame and mounted about a common axis,*
6.	*means connected with said shaft for rotating said cams about said common axis,*	YES	*means connected with said shaft for rotating said cams about said common axis,*
7.	*a cam follower,*	YES	*a cam follower,*
8.	*means mounting said cam follower in said frame for movement radially of said common axis*	YES	*means mounting said cam follower in said frame for movement radially of said common axis,*
9.	*said follower having a single cam-engaging head with its one end engaging and responding to the surface of a cam of said series,*	YES	*said follower having a single cam-engaging head with its one end engaging and responding to the surface of a cam of said series,*
10.	*means enabling a selected cam to be engaged by said single cam-engaging head,*	YES	*means enabling a selected cam to be engaged by said single cam-engaging head,*
11.	*spring means normally urging said single cam-engaging head into engagement with said selected cam surface,*	YES	*spring means normally urging said single cam-engaging head into engagement with said selected cam surface,*
12.	*means releasably locking said cam-engaging head and said selected cam surface against movement relative to each other lengthwise of said common cam axis during the normal operation of the machine,*	YES	*means releasably locking said cam-engaging head and said selected cam surface against movement relative to each other lengthwise of said common cam axis during the normal operation of the machine,*
13.	*a manually operable member carried within said frame and having a portion positioned adjacent to and movable with said cam follower for withdrawing said cam-engaging head from and radially of said selected cam surface,*	YES	*a manually operable member carried within said frame and having a portion positioned adjacent to and movable with said cam follower for withdrawing said cam-engaging head from and radially of said selected cam surface,*

DEFENDANT'S EXHIBIT 137

ELEMENT NO.	MECHANICAL ELEMENTS OF GEGAUF PATENT No. 2,832,302 AS DESCRIBED IN CLAIM 1	ELEMENTS FOUND IN HARRIS CLAIMS ?	MECHANICAL ELEMENTS OF HARRIS PATENT NO RE 24,370 AS DESCRIBED IN CLAIM 5
INTRODUCTION	*An ornamental stitch sewing machine for selectively producing a plurality of different stitch patterns and comprising,*		*An ornamental stitch sewing machine for selectively producing a plurality of different stitch patterns and comprising,*
1.	*a hollow frame,*	YES	*a hollow frame,*
2.	*a needle pivotally carried by said frame and mounted for endwise reciprocation and for lateral swinging movements,*	YES	*a needle pivotally carried by said frame and mounted for endwise reciprocation and for lateral swinging movements,*
3.	*a rotary shaft mounted in said frame for reciprocating said needle,*	YES	*a rotary shaft mounted in said frame for reciprocating said needle,*
4.	*means for rotating said shaft,*	YES	*means for rotating said shaft,*
	Statement of Facts (# 29)		
5.	*a series of rotary cams having different stitch patterns carried by said frame and mounted about a common axis,*	YES	*a series of rotary cams having different stitch patterns carried by said frame mounted for rotation about a common axis and shiftable lengthwise of said axis,*
6.	*means connected with said shaft for rotating said cams about said common axis,*	YES	*means connected with said shaft for rotating said cams about said common axis,*
7.	*a cam follower,*	YES	*a cam follower,*
8.	*means mounting said cam follower in said frame for movement radially of said common axis,*	YES	*means mounting said cam follower in said frame for movement radially of said common axis,*
9.	*said follower having a single cam-engaging head with its one end engaging and responding to the surface of a cam of said series,*	YES	*said follower having a single cam-engaging head with its one end engaging and responding to the surface of a cam of said series,*
10.	*means enabling a selected cam to be engaged by said single cam-engaging head,*	YES	*means enabling a selected cam to be engaged by said single cam engaging head,*

MECHANICAL ELEMENTS OF HARRIS PATENT NO RE 24,370 AS DESCRIBED IN CLAIM 5	MECHANICAL ELEMENTS OF HARRIS PATENT NO RE 24,370 AS DESCRIBED IN CLAIM 6	MECHANICAL ELEMENTS OF HARRIS PATENT NO RE 24,370 AS DESCRIBED IN CLAIM 7
An ornamental stitch sewing machine for selectively producing a plurality of different stitch patterns and comprising,	*An ornamental stitch sewing machine for selectively producing a plurality of different stitch patterns and comprising,*	*An ornamental stitch sewing machine for selectively producing a plurality of different stitch patterns and comprising*
a hollow frame,	*a hollow frame,*	*a hollow frame,*
a needle pivotally carried by said frame and mounted for endwise reciprocation and for lateral swinging movements,	*a needle pivotally carried by said frame and mounted for endwise reciprocation and for lateral swinging movements,*	*a needle pivotally carried by the frame and mounted for endwise reciprocation and for lateral swinging movements,*
a rotary shaft mounted in said frame for reciprocating said needle,	*a rotary shaft mounted in said frame for reciprocating said needle,*	*a first rotary shaft mounted horizontally in the frame for reciprocating the needle,*
means for rotating said shaft,	*means for rotating said shaft,*	*means for rotating the shaft,*
	means including a constantly rotatable eccentric for imparting swinging movements to said needle driven by said rotating means,	
		a second shaft carried vertically by the frame,
		gears connecting the first and second shafts whereby the second is driven by the first,
		a third shaft carried by the frame in parallelism with and at a location below the first shaft,
		gears connecting the second and third shafts whereby the third is driven by the second,
a series of rotary cams having different stitch patterns carried by said frame mounted for rotation about a common axis and shiftable lengthwise of said axis,	*a series of rotary cams having different stitch patterns carried by said frame and mounted about a common axis,*	*a series of rotary cams having different stitch patterns carried by and rotatable with the third shaft,*
means connected with said shaft for rotating said cams about said common axis,	*means connected with said shaft for rotating said cams about said common axis,*	(recurd in these connections)
a cam follower,	*a cam follower,*	*a cam follower,*
means mounting said cam follower in said frame for movement radially of said common axis,	*means mounting said cam follower in said frame for movement radially of said common axis,*	*means mounting the cam follower in the frame at a location beneath the first shaft for movement radially of the third shaft,*
said follower having a single cam-engaging head with its one end engaging and responding to the surface of a cam of said series,	*said follower having a single cam-engaging head with its one end engaging and responding to the surface of a cam of said series,*	*said follower having a single cam-engaging head with its one end engaging and responding to the surface of a cam of the series,*
means enabling a selected cam to be engaged by said single cam-engaging head,	*means enabling a selected cam to be engaged by said single cam-engaging head,*	*means enabling a selected cam to be engaged by the single cam-engaging head,*

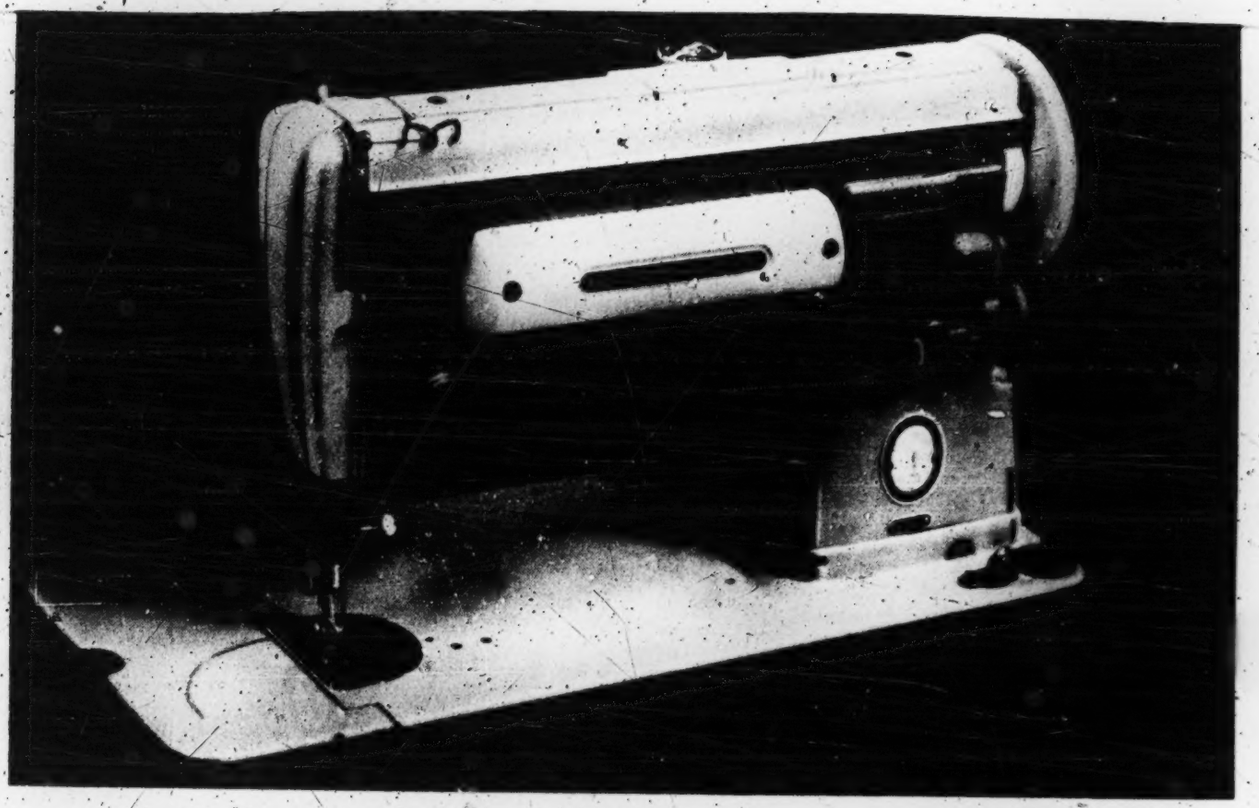

Now—the famous Slant-Needle **SINGER**®
does *zigzag stitching* as well as straight stitching!

- **Comes complete with exclusive SINGER Automatic Zigzagger!**
- **Costs up to $100 less than many zigzag-needle machines!**

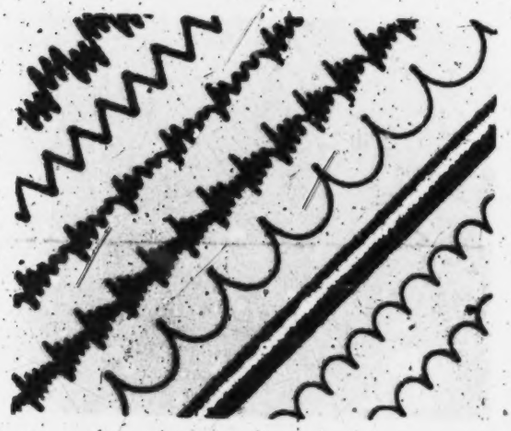

Yes, the SINGER Slant-Needle *automatically* does arrowheads, dominoes, scallops, monograms, finishing stitches for mending, hemming, overcasting seams! Saves you time—as well as money.

Just think! Without spending the extra money for an automatic zigzag machine, you can do perfect straight stitching and beautiful fashion stitching *automatically!*

Only SINGER has the Slant-Needle* Machine, the newest, most streamlined, straight-stitching machine—specially designed to make it easier to *see* as you sew!

And now the Slant-Needle comes with its own Automatic Zigzagger—an amazing, exclusive SINGER feature. It does *dozens* of fashion stitches automatically—perfectly, beautifully.

Here is truly the most versatile, most trouble-free machine ever offered for so little money. Stop in or phone for free home demonstration. Take advantage of this exciting value now!

SINGER SEWING CENTERS

Also headquarters for SINGER* Vacuum Cleaners

Listed in your phone book under SINGER SEWING MACHINE CO.

*A Trademark of THE SINGER MANUFACTURING COMPANY

THIS ADVERTISEMENT APPEARS IN THE FOLLOWING MAGAZINES:

Progressive Farmer—April 19, 1957 ***(On Sale March 15th)***
Successful Farming—April, 1957 ***(On Sale March 18th)***
Farm Journal—April, 1957 ***(On Sale March 23rd)***
Electricity on the Farm—April, 1957 ***(On Sale April 1st)***

1545

1.	a hollow frame,	YES	a hollow frame,
2.	a needle pivotally carried by said frame and mounted for endwise reciprocation and for lateral swinging movements,	YES	a needle pivotally carried by said frame and mounted for endwise reciprocation and for lateral swinging movements,
3.	a rotary shaft mounted in said frame for reciprocating said needle,	YES	a rotary shaft mounted in said frame for reciprocating said needle,
4.	means for rotating said shaft,	YES	means for rotating said shaft,
5.	a series of rotary cams having different stitch patterns carried by said frame and mounted about a common axis,	YES	a series of rotary cams having different stitch patterns carried by said frame and mounted about a common axis,
6.	means connected with said shaft for rotating said cams about said common axis,	YES	means connected with said shaft for rotating said cams about said common axis,
7.	a cam follower,	YES	a cam follower,
8.	means mounting said cam follower in said frame for movement radially of said common axis,	YES	means mounting said cam follower in said frame for movement radially of said common axis,
9.	said follower having a single cam-engaging head with its one end engaging and responding to the surface of a cam of said series,	YES	said follower having a single cam-engaging head with its one end engaging and responding to the surface of a cam of said series,
10.	means enabling a selected cam to be engaged by said single cam-engaging head,	YES	means enabling a selected cam to be engaged by said single cam-engaging head,
11.	spring means normally urging said single cam-engaging head into engagement with said selected cam surface,	YES	spring means normally urging said single cam-engaging head into engagement with said selected cam surface,
12.	means releasably locking said cam-engaging head and said selected cam surface against movement relative to each other lengthwise of said common cam axis during the normal operation of the machine,	YES	means releasably locking said cam-engaging head and said selected cam surface against movement relative to each other lengthwise of said common cam axis during the normal operation of the machine,
13.	a manually operable member carried within said frame and having a portion positioned adjacent to and movable with said cam follower for withdrawing said cam-engaging head from and radially of said selected cam surface,	YES	a manually operable member carried within said frame and having a portion positioned adjacent to and movable with said cam follower for withdrawing said cam-engaging head from and radially of said selected cam surface,
14.	a handle formed on said member and extending outside the confines of said frame, said series of cams and said single cam-engaging head being relatively shiftable lengthwise of the common cam axis after said cam follower has been withdrawn radially from a selected cam thereby to effect a partial or a complete traverse of said series of rotary cams whereby the single cam-engaging head can be manually engaged with one cam after the other in any desired sequence, and	YES	a handle formed on said member and extending outside the confines of said frame, said series of cams and said single cam-engaging head being relatively shiftable lengthwise of the common cam axis after said cam follower has been withdrawn radially from a selected cam thereby to effect a partial or a complete traverse of said series of rotary cams whereby the single cam-engaging head can be manually engaged with one cam after the other in any desired sequence, and
15.	a pitman having one end connected with said needle at a point spaced from the pivot and its other end operatively connected with the other end of said single cam-engaging head thereby to impart lateral swinging movement to said needle in response to the surface of said selected cam.	YES	a pitman having one end connected with said needle at a point spaced from the pivot and its other end operatively connected with the other end of said single cam-engaging head thereby to impart lateral swinging movement to said needle in response to the surface of said selected cam

4.	means for rotating said shaft,	YES	means for rotating said shaft,
	Statement of facts (P 29)		
5.	a series of rotary cams having different stitch patterns carried by said frame and mounted about a common axis,	YES	a series of rotary cams having different stitch patterns carried by said frame mounted for rotation about a common axis and shiftable lengthwise of said axis,
6.	means connected with said shaft for rotating said cams about said common axis,	YES	means connected with said shaft for rotating said cams about said common axis,
7.	a cam follower,	YES	a cam follower,
8.	means mounting said cam follower in said frame for movement radially of said common axis,	YES	means mounting said cam follower in said frame for movement radially of said common axis,
9.	said follower having a single cam-engaging head with its one end engaging and responding to the surface of a cam of said series,	YES	said follower having a single cam-engaging head with its one end engaging and responding to the surface of a cam of said series,
10.	means enabling a selected cam to be engaged by said single cam-engaging head,	YES	means enabling a selected cam to be engaged by said single cam engaging head,
11.	spring means normally urging said single cam-engaging head into engagement with said selected cam surface,	YES	spring means normally urging said single cam-engaging head into engagement with said selected cam surface,
12.	means releasably locking said cam-engaging head and said selected cam surface against movement relative to each other lengthwise of said common cam axis during the normal operation of the machine,	YES	means releasably locking said cam-engaging head and said selected cam surface against movement relative to each other lengthwise of said common cam axis during the normal operation of the machine,
13.	a manually operable member carried within said frame and having a portion positioned adjacent to and movable with said cam follower for withdrawing said cam-engaging head from and radially of said selected cam surface,	YES	a manually operable member carried within said frame and having a portion positioned adjacent to and movable with said cam follower for withdrawing said cam-engaging head from and radially of said selected cam surface,
14.	a handle formed on said member and extending outside the confines of said frame, said series of cams and said single cam-engaging head being relatively shiftable lengthwise of the common cam axis after said cam follower has been withdrawn radially from a selected cam thereby to effect a partial or a complete traverse of said series of rotary cams whereby the single cam-engaging head can be manually engaged with one cam after the other in any desired sequence, and	YES	a handle formed on said member and extending outside the confines of said frame, means enabling a selected cam of said series to be shifted lengthwise of said common axis and disposed in operative engagement with said single cam-engaging head after said cam follower has been withdrawn radially from a selected cam thereby to effect a partial or a complete traverse of said series of rotary cams whereby the single cam-engaging head can be manually engaged with one cam after the other in any desired sequence, and
15.	a pitman having one end connected with said needle at a point spaced from the pivot and its other end operatively connected with the other end of said single cam-engaging head thereby to impart lateral swinging movement to said needle in response to the surface of said selected cam.	YES	a pitman having one end connected with said needle at a point spaced from the pivot and its other end operatively connected with the other end of said single cam-engaging head thereby to impart lateral swinging movements to said needle in response to the surface of said selected cam.

		gears connecting the first and second shafts whereby the second is driven by the first,
		a third shaft carried by the frame in parallelism with and at a location below the first shaft,
		gears connecting the second and third shafts whereby the third is driven by the second,
a series of rotary cams having different stitch patterns carried by said frame mounted for rotation about a common axis and shiftable lengthwise of said axis,	a series of rotary cams having different stitch patterns carried by said frame and mounted about a common axis,	a series of rotary cams having different stitch patterns carried by and rotatable with the third shaft,
means connected with said shaft for rotating said cams about said common axis,	means connected with said shaft for rotating said cams about said common axis,	(found in these connections)
a cam follower,	a cam follower,	a cam follower,
means mounting said cam follower in said frame for movement radially of said common axis,	means mounting said cam follower in said frame for movement radially of said common axis,	means mounting the cam follower in the frame at a location beneath the first shaft for movement radially of the third shaft,
said follower having a single cam-engaging head with its one end engaging and responding to the surface of a cam of said series,	said follower having a single cam-engaging head with its one end engaging and responding to the surface of a cam of said series,	said follower having a single cam-engaging head with its one end engaging and responding to the surface of a cam of the series,
means enabling a selected cam to be engaged by said single cam-engaging head,	means enabling a selected cam to be engaged by said single cam-engaging head,	means enabling a selected cam to be engaged by the single cam-engaging head,
spring means normally urging said single cam-engaging head into engagement with said selected cam surface,	spring means normally urging said single cam-engaging head into engagement with said selected cam surface,	spring means normally urging the single cam-engaging head into engagement with the selected cam surface,
means releasably locking said cam-engaging head and said selected cam surface against movement relative to each other lengthwise of said common cam axis during the normal operation of the machine,	means releasably locking said cam-engaging head and said selected cam surface against movement relative to each other lengthwise of said common cam axis during the normal operation of the machine,	means releasably locking said cam-engaging head and said selected cam surface against movement relative to each other lengthwise of the third shaft during the normal operation of the machine,
a manually operable member carried within said frame and having a portion positioned adjacent to and movable with said cam follower for withdrawing said cam-engaging head from and radially of said selected cam surface,	a manually operable member carried within said frame and having a portion positioned adjacent to and movable with said cam follower for withdrawing said cam-engaging head from and radially of said selected cam surface,	manually operable means disposed adjacent to and movable with the cam follower for withdrawing the cam-engaging head from and radially of a selected cam surface, said last mentioned means including a horizontal rod reciprocatingly mounted in the frame with a portion thereof extending outside the confines of the frame and with a knob provided upon the exposed end of the rod for imparting reciprocating movements thereto,
a handle formed on said member and extending outside the confines of said frame,	a handle formed on said member and extending outside the confines of said frame,	
means enabling a selected cam of said series to be shifted lengthwise of said common axis and disposed in operative engagement with said single cam-engaging head after said cam follower has been withdrawn radially from a selected cam thereby to effect a partial or a complete traverse of said series of rotary cams whereby the single cam-engaging head can be manually engaged with one cam after the other in any desired sequence, and	said series of cams and said single cam-engaging head being relatively shiftable lengthwise of the common cam axis after said cam follower has been withdrawn radially from a selected cam thereby to effect a partial or a complete traverse of said series of rotary cams whereby the single cam-engaging head can be manually engaged with one cam after the other in any desired sequence, and	said series of cams and said single cam-engaging head being relatively shiftable lengthwise of the third shaft after the cam follower has been withdrawn radially from a selected cam thereby to effect a partial or a complete traverse of the series of rotary cams whereby the single cam-engaging head can be manually engaged with one cam after the other in any desired sequence, and
a pitman having one end connected with said needle at a point spaced from the pivot and its other end operatively connected with the other end of said single cam-engaging head thereby to impart lateral swinging movement to said needle in response to the surface of said selected cam.	means operatively connecting the other end of said cam-engaging head with said needle swinging means whereby the patterns of lateral swinging movements imparted to said needle by said rotating eccentric are automatically varied.	a pitman having one end connected with the needle at a point spaced from the pivot and its other end operatively connected with the other end of the single cam-engaging head thereby to impart lateral swinging movement to the needle in response to the surface of the selected cam

DEFENDANT'S EXHIBIT 152

Do zigzag stitching *automatically* . . . and save up to $100!

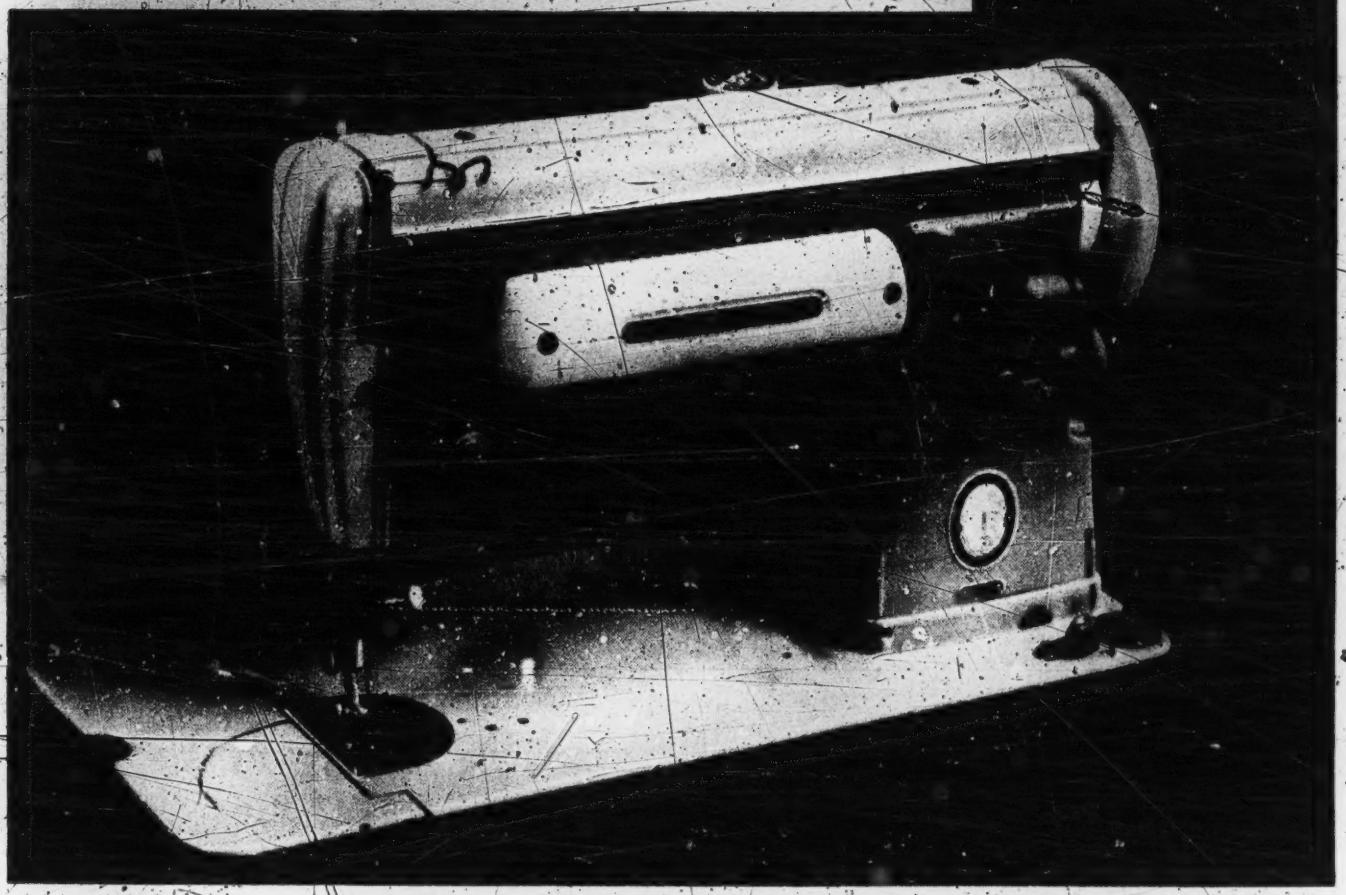

Now—the famous Slant-Needle **SINGER***

does *zigzag stitching* as well as straight stitching!

- **Comes complete with exclusive SINGER Automatic Zigzagger!**
- **Costs up to $100 less than many zigzag-needle machines!**

[fol. 5557]

In United States District Court

Defendant's Exhibit 153

Dollar Amount of Advertising Expenditures For Defendant's Class 404, 403 and 401 Household Sewing Machines During the Period 1957 Through 1960

Class	Description	1957	1958	1959	1960
404	Straight Stitch with Zigzag Attachment	—	—	$ 584,997.21	$ 131,617.81
403	Replaceable Cam	—	—	$ 544,568.40	$ 121,312.77
401	Machine-Carried Multiple Cam	$2,145,001.27	$1,270,897.16	$1,343,971.60	$1,399,482.59

1547

[Fols. 3553-3554] In United States District Court
Defendant's Exhibit 1462B

here's a feature-by-feature com

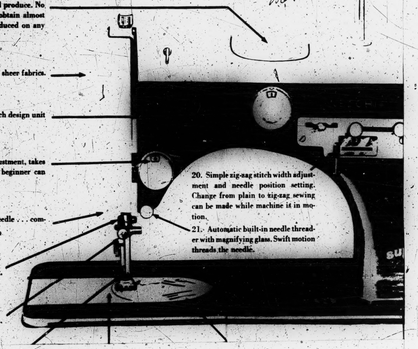

1. Easy changeable disc mechanism. Each preassembled triple action disc is clearly marked as to the design it will produce. No manipulation of complicated knobs necessary to obtain almost limitless variations of design that cannot be produced on any other machine.

2. Calibrated presser bar . . . important for sewing sheer fabrics.

3. Tuning knob for elongation of design units. Each design unit can be elongated from ¼" to 1½".

4. Red dot shows position for normal tension adjustment, takes guesswork out of tension setting so that even a beginner can adjust tension easily.

5. Built-in 12-volt shockproof light right over needle . . . completely illuminates sewing area.

6. Thread cutter holds two threads after cutting. machine is always ready to begin sewing.

7. New automatic needle changer. Press button, insert needle, no screw driver needed.

20. Simple zig-zag stitch width adjustment and needle position setting. Change from plain to zig-zag sewing can be made while machine is in motion.

21. Automatic built-in needle threader with magnifying glass. Swift motion threads the needle.

comparison of the fully automatic NECCHI and a

Before you buy any machine, compare each feature on

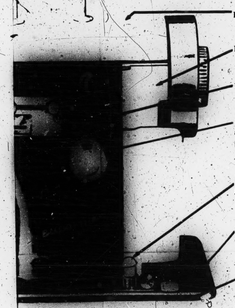

12. One-point self oiling system.

13. Built-in bobbin winder.

14. Push-button reverse.

15. Modern, easiest to use tuning knob for stitch adjustment. Red dot on stitch regulator knob shows position for satin stitch.

16. Push-button drop feed allows free flow of fabrics on an even, flat surface.

17. Two-speed motor, useful to beginners or when doing intricate work.

18. Patented shock-absorbing rim around machine, reduces vibration and protects enamel from chipping.

19. Award winning modern design in choice of three, two-tone pastel colors. Has all parts fully enclosed in the frame of the machine. Easily kept clean.

11. Pre-set easy to install double needle allows sewing zig-zag or smocking, for decorative value.

1. Automatic mechanism has seven built-in producing seven limited decorative stitches changeable single action discs to produce five tive stitches. Automatic stitches, of limited de be produced by difficult manipulations of t scale, plus lever adjustment.

2. No calibrated presser bar . . . adjustment work.

3. No provision for design elongation. Ever same size (approximately ¼").

4. Old fashioned type of tension adjustmen red dot for normal tension setting.

5. Light placed in front of the arm, tends the hand on the work. Non-shockproof ligh out quickly because of 110 volt power.

6. Thread cutter does not hold two thread must be brought together by hand.

7. Needle changed manually. You have to l the change.

8. A needle that slants has a longer motion material. It is liable, in some cases, to caus venience, in sewing certain materials.

NECCHI and a leading competitive semi-auto

pare each feature on this chart . . .

1. Automatic mechanism has seven built-in single action discs producing seven limited decorative stitches, plus five interchangeable single action discs to produce five additional decorative stitches. Automatic stitches, of limited decorative value, may be produced by difficult manipulations of two knobs on letter scale, plus lever adjustment.

2. No calibrated presser bar . . . adjustment is a matter of guesswork.

3. No provision for design elongation. Every design unit is the same size (approximately ¼").

4. Old fashioned type of tension adjustment. No clearly marked red dot for normal tension setting.

5. Light placed in front of the arm, tends to throw shadows of the hand on the work. Non-shockproof light heats up and burns out quickly because of 110 volt power.

6. Thread cutter does not hold two threads after cutting. They must be brought together by hand.

7. Needle changed manually. You have to loosen a screw to make the change.

8. A needle that slants has a longer motion in going through the material. It is liable, in some cases, to cause trouble and inconvenience, in sewing certain materials.

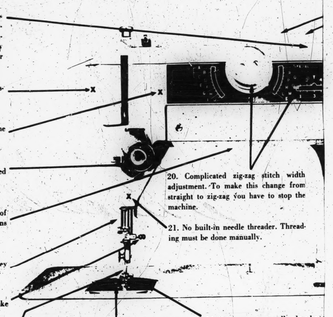

20. Complicated zig-zag stitch width adjustment. To make this change from straight to zig-zag you have to stop the machine.

21. No built-in needle threader. Threading must be done manually.

9. Bobbin is changed from the top in front of needle. Very difficult to adjust lower tension because it must be done within the machine.

10. Separate extra needle plate has to be inserted for straight-stitch sewing on fine fabrics.

titive semi-automatic machine

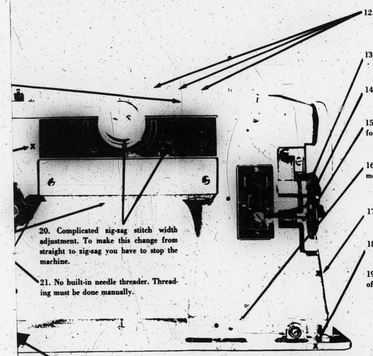

12. Numerous oil holes; not clearly marked.

13. Exposed bobbin winder detracts from appearance.

14. Must set a lever for reverse sewing.

15. Lever for stitch length adjustment and complicated process for setting satin stitch.

16. No drop feed. Throat plate raises instead which makes free movement of fabric difficult because of uneven surface.

17. Only one motor speed available.

18. No vibration-absorbing rim.

19. Sharp angular design with cluttered appearance. No choice of color.

20. Complicated zig-zag stitch width adjustment. To make this change from straight to zig-zag you have to stop the machine.

21. No built-in needle threader. Threading must be done manually.

10. Separate extra needle plate has to be inserted for straight-stitch sewing on fine fabrics.

11. Difficult to install double needle (consists of two single needles). Does not provide for zig-zag sewing or smocking.

X indicates area where a comparison could not be made because device does not exist.

S1. Carrying case does not convert to a full size work table.

S2. Does not have a free arm for tubular sewing.

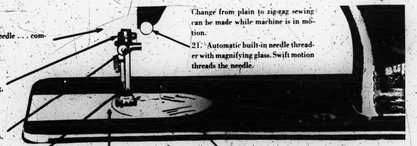

5. Built-in 12-volt shockproof light right over needle . . . completely illuminates sewing area.

6. Thread cutter holds two threads after cutting. machine is always ready to begin sewing.

7. New automatic needle changer. Press button, insert needle, no screw driver needed.

8. Mechanical engineers agree that the most efficient way of sewing is with a straight needle because the most direct way through the fabric is vertically.

Change from plain to zig-zag sewing can be made while machine is in motion.

21. Automatic built-in needle threader with magnifying glass. Swift motion threads the needle.

9. Bobbin can be changed easily from left side of machine. Bobbin case comes out for easy adjustment of lower tension.

10. All-stitch circular needle plate. Only machine with a needle plate that never needs to be changed. For all sewing needs.

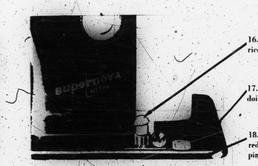

16. Push-button drop feed allows free flow of fabrics on an even, flat surface.

17. Two-speed motor, useful to beginners or when doing intricate work.

18. Patented shock-absorbing rim around machine, reduces vibration and protects enamel from chipping.

19. Award winning modern design in choice of three, two-tone pastel colors. Has all parts fully enclosed in the frame of the machine. Easily kept clean.

11. Pre-set easy to install double needle allows sewing zig-zag or smocking, for decorative value.

4. Old fashioned type of tension adjustmen red dot for normal tension setting.

5. Light placed in front of the arm, tends the hand on the work. Non-shockproof ligh out quickly because of 110 volt power.

6. Thread cutter does not hold two thread must be brought together by hand.

7. Needle changed manually. You have to l the change.

8. A needle that slants has a longer motion material. It is liable, in some cases, to caus venience, in sewing certain materials.

4. Old fashioned type of tension adjustment. No clearly marked red dot for normal tension setting.

5. Light placed in front of the arm, tends to throw shadows of the hand on the work. Non-shockproof light heats up and burns out quickly because of 110 volt power.

6. Thread cutter does not hold two threads after cutting. They must be brought together by hand.

7. Needle changed manually. You have to loosen a screw to make the change.

8. A needle that slants has a longer motion in going through the material. It is liable, in some cases, to cause trouble and inconvenience, in sewing certain materials.

20. Complicated zig-zag stitch width adjustment. To make this change from straight to zig-zag you have to stop the machine.

21. No built-in needle threader. Threading must be done manually.

9. Bobbin is changed from the top in front of needle. Very difficult to adjust lower tension because it must be done within the machine.

10. Separate extra needle plate has to be inserted for straight-stitch sewing on fine fabrics.

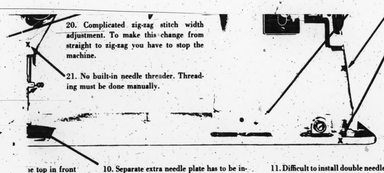

20. Complicated zig-zag stitch width adjustment. To make this change from straight to zig-zag you have to stop the machine.

21. No built-in needle threader. Threading must be done manually.

10. Separate extra needle plate has to be inserted for straight-stitch sewing on fine fabrics.

11. Difficult to install double needle (consists of two single needles). Does not provide for zig-zag sewing or smocking.

X indicates area where a comparison could not be made because device does not exist.

18. No vibration-absorbing rim.

19. Sharp angular design with cluttered appearance. No choice of color.

S1. Carrying case does not convert to a full size work table.

S2. Does not have a free arm for tubular sewing.

S3. Does not have a calibrated scale to adjust lower tension.

S4. Cannot make Turkish Hemstitch

S5. Cannot make Point de Paris.

the secret of NECCHI "triple-action" control

The Triple Disc is the secret of amazing "Triple-action" Control. As you see, each unit actually consists of 3 individual discs, each controlling a different automatic function.

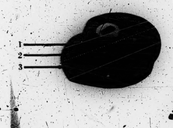

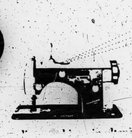

Disc #1 controls the positioning of the needle; disc #2 controls the swing of the needle; and disc #3 controls the movement of the fabric.

Because of "Triple-action" Control, with the fully automatic NECCHI you can make:

AUTOMATIC buttonholes and button sewing . . . one exclusive disc makes instant buttonholes in one continuous operation—without having to turn the fabric. The same disc sews on buttons automatically. No levers to set!

AUTOMATIC darning and mending. Weaves rips and tears like new. You don't have to move the fabric back and forth as on other machines.

AUTOMATIC decorative stitches. No machine can duplicate all of these delicate stitches . . . more than 200,000 different variations of design to choose from.

AUTOMATIC tapering that allows beautiful monograms with ease and precision. Ideal for personalizing every item in your home and wardrobe.

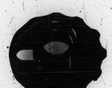

Ordinary single discs control only the swing of needle. Therefore, all designs are variations of satin stitch like this:

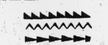

* You cannot make delicate embroidery stitches.

* You cannot make a buttonhole in one continuous operation.

Ordinary single discs control only the swing of the needle. Therefore, all designs are variations of the satin stitch like this:

* You cannot make delicate embroidery stitches.

* You cannot make a buttonhole in one continuous operation.

compare the *portable* ELNA, too! →

E1. Carrying case converts into a full size work table — in seconds.

E2. Free arm ideal for all tubular sewing such as sleeves, trousers, and baby things.

E3. Only machine that has a simple calibrated scale to adjust lower tension.

E4. Makes delicate Turkish Hemstitching.

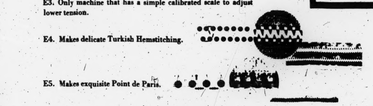

E5. Makes exquisite Point de Paris.

plus almost all of the NECCHI automatic features

[fol. 5555] In United States District Court

Defendant's Exhibit 151

SINGER

STITCH PATTERN COMPARISON CHART
401 AND 403 MACHINES

401

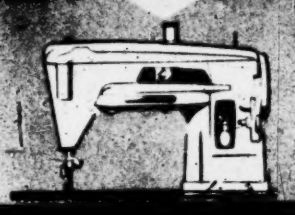

403

STITCH PATTERNS		
Primary Pattern B L	ZIGZAG	DISC (0)
Primary Pattern B O	BLIND STITCH	DISC (8)
Primary Pattern B Q	MULTI ZIGZAG	DISC (9)
Primary Pattern B M	BALL / BALL	DISC (10)
Combination Pattern D S (2) 3	SCALLOP / SCALLOP	DISC (6)
Combination Pattern F O 3	ICICLE / ICICLE	DISC (7)
DISC (11)	RIBBON	DISC (11)
DISC (1)	ARROWHEAD	DISC (1)
DISC (5)	BANNER	DISC (5)
DISC (2)	24 STITCH SCALLOP	DISC (2)
DISC (3)	DIAMOND	DISC (3)
DISC (4)	SOLID SCALLOP	DISC (4)

FASHION® Discs

Furnished with machine—
Zigzag Disc (0) on holder in machine
Eight additional Discs in Attachment Box

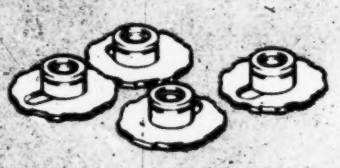

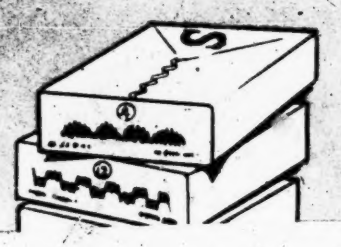

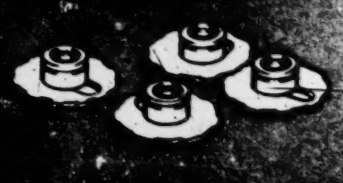

STITCH PATTERNS		
DISC (11)	RIBBON	DISC (11)
DISC (1)	ARROWHEAD	DISC (1)
DISC (5)	BANNER	DISC (5)
DISC (2)	24 STITCH SCALLOP	DISC (2)
DISC (3)	DIAMOND	DISC (3)
DISC (4)	SOLID SCALLOP	DISC (4)

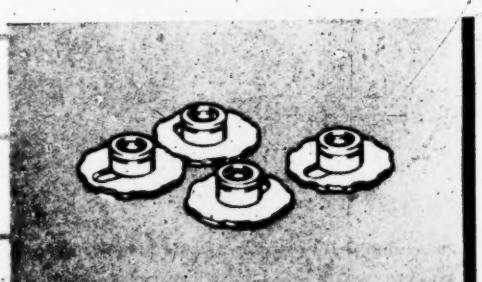

FASHION® Discs

Individually packaged
Available for
separate purchase

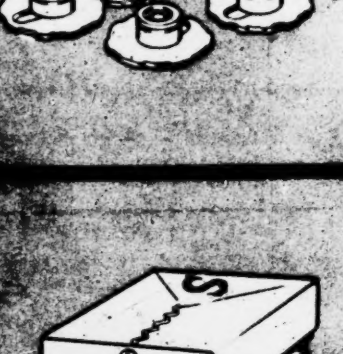

STITCH PATTERNS		
Combination Pattern H L 3	DOMINO	DISC (12)
Variation Pattern I L 2	FAGOTING / FAGOTING	DISC (13)
Combination Pattern G L 3	COMB	DISC (14)
Variation Pattern F O 2	SHAG	DISC (16)
Combination Pattern G R 3	CURLIQUE	DISC (17)
Primary Pattern B N	PYRAMID	DISC (18)
DISC (19)	BLOCK	DISC (19)
DISC (20)	WALLS OF TROY	DISC (20)
DISC (21)	CHEVRON	DISC (21)
DISC (15)	THUNDERBIRD	DISC (15)

FASHION® Discs

Individually packaged
Available for
separate purchase

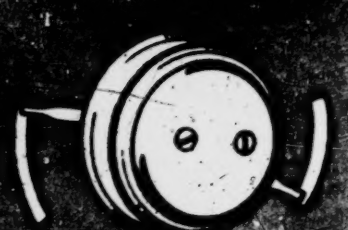

FASHION Discs

EXHIBIT
U. S. Dist. Court
S. D. of N. Y.
DEFENDANT'S
JUN - 5 1961

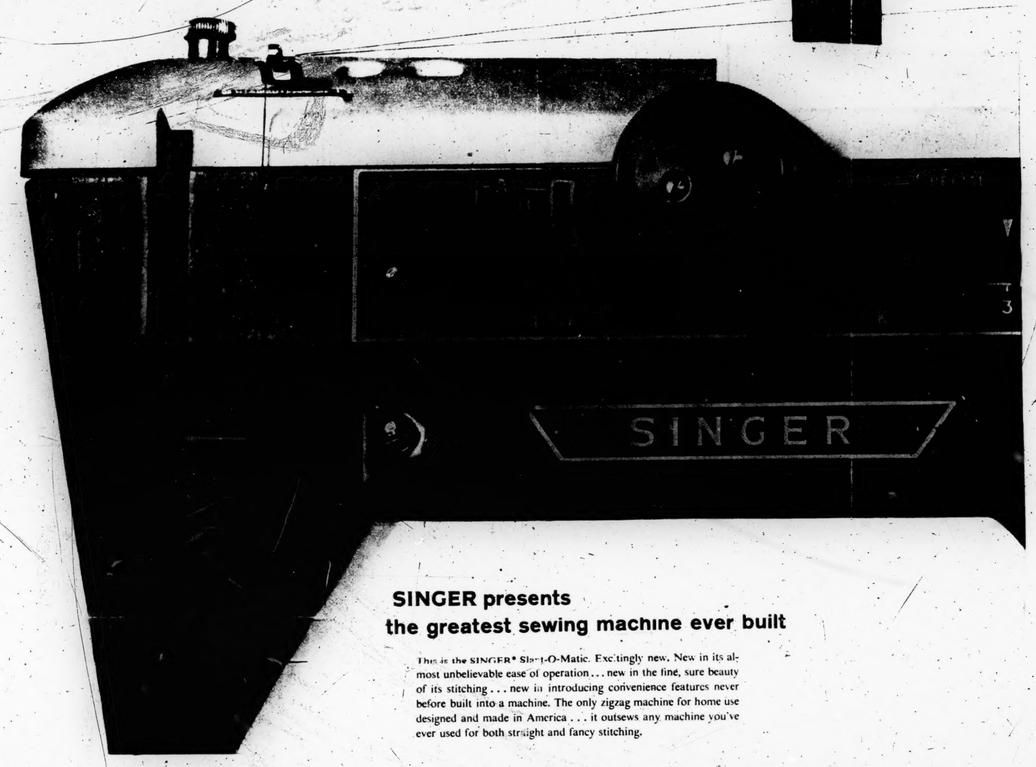

SINGER presents
the greatest sewing machine ever built

This is the SINGER* Slant-O-Matic. Exc'tingly new. New in its almost unbelievable ease of operation . . . new in the fine, sure beauty of its stitching . . . new in introducing convenience features never before built into a machine. The only zigzag machine for home use designed and made in America . . . it outsews any machine you've ever used for both straight and fancy stitching.

First automatic with a slant-needle and gear motor drive for easiest sewing, smoothest sewing ever. No stalling.

First automatic with a "[illegible] in" bobbin in *front* of needle. Fingertip control lifts throat plate for embroidery.

First automatic with a snap-up stitch chart on top, that lets you "tune" knob for all kinds of fancy stitches.

S* Y2 SINGER exclusives! See them at your

SINGER SEWING CENTERS

Listed in your phone book under SINGER SEWING MACHINE CO. *Trademark of THE SINGER MANUFACTURING CO.

Slant-O-Matic shown one-third larger than actual size.

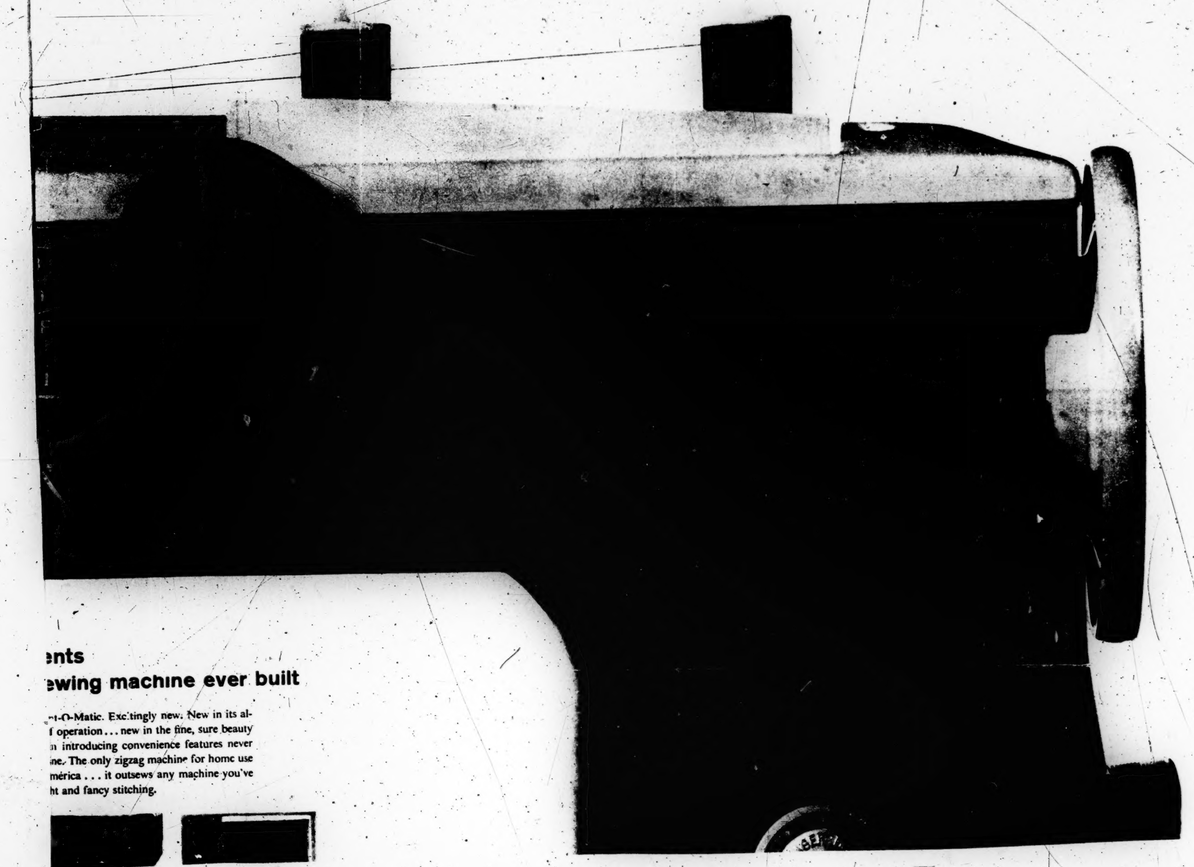

ents
ewing machine ever built

-t-O-Matic. Exc'tingly new. New in its al-
f operation . . . new in the fine, sure beauty
n introducing convenience features never
ne. The only zigzag machine for home use
mérica . . . it outsews any machine you've
ht and fancy stitching.

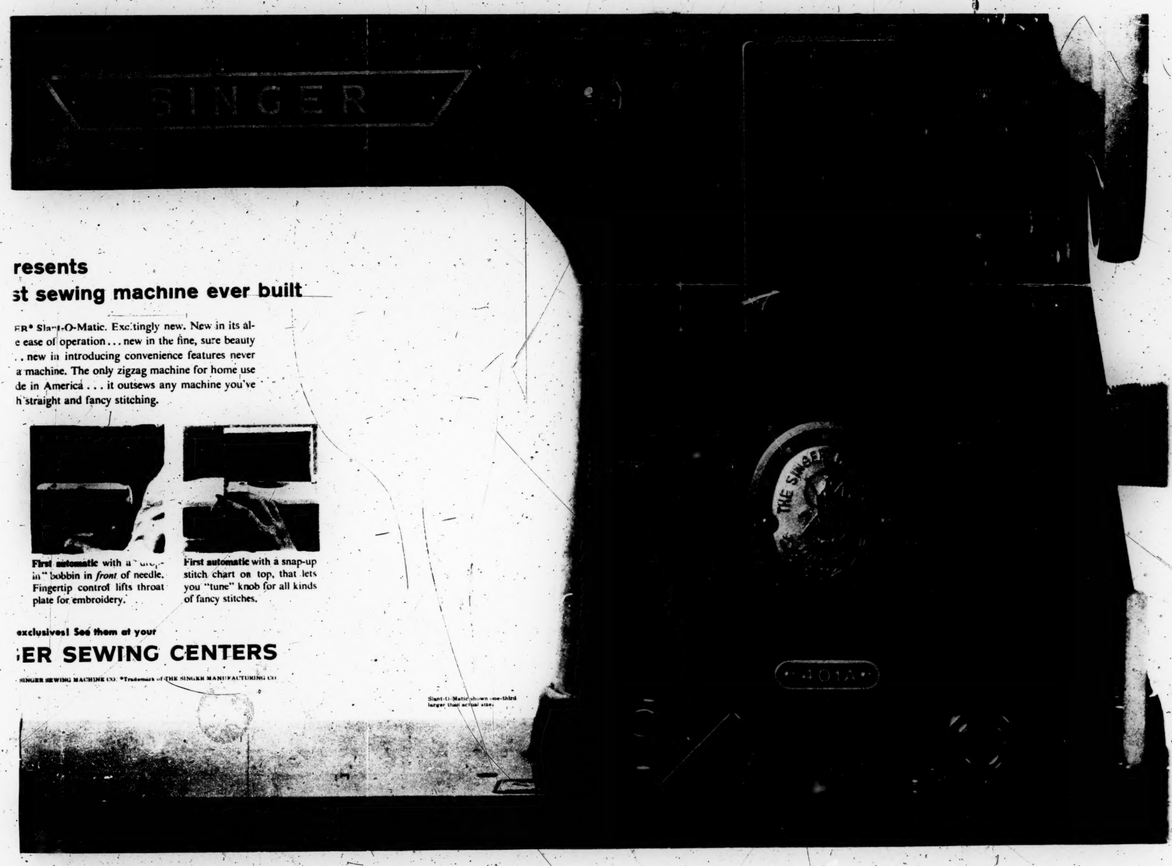

resents
st sewing machine ever built

ER* Slant-O-Matic. Exc'tingly new. New in its al-
e ease of operation . . . new in the fine, sure beauty
. . new in introducing convenience features never
a machine. The only zigzag machine for home use
de in America . . . it outsews any machine you've
h straight and fancy stitching.

First automatic with a "[illegible] in" bobbin in *front* of needle. Fingertip control lifts throat plate for embroidery.

First automatic with a snap-up stitch chart on top, that lets you "tune" knob for all kinds of fancy stitches.

exclusives! See them at your

ER SEWING CENTERS

SINGER SEWING MACHINE CO. *Trademark of THE SINGER MANUFACTURING CO.

Slant-O-Matic shown one-third larger than actual size.

Over 60 million people will see and read about the fabulous new Singer Slant-O-Matic in the following pu

	Circulation	Readers
Life—September 16, 1957 (*On Sale September 12th*)	5,738,000	12,602,000
Look—September 17, 1957 (*On Sale September 3rd*)	4,191,000	8,769,000
Ladies Home Journal—October, 1957 (*On Sale September 24th*)	5,320,000	6,327,000
McCall—October, 1957 (*On Sale September 26th*)	4,830,000	6,322,000
Good Housekeeping—October, 1957 (*On Sale September 19th*)	3,815,000	4,827,000
Woman's Day—October, 1957 (*On Sale September 24th*)	3,141,000	5,057,000
Parents—October, 1957 (*On Sale September 25th*)	1,686,000	2,356,000
Farm Journal—October, 1957 (*On Sale September 15*		
Progressive Farmer—October, 1957 (*On Sale Septem*		
Successful Farming—October, 1957 (*On Sale Septemb*		
McCall's Pattern Book—Winter, 1957 (*On Sale Octob*		
Vogue Pattern Book—Autumn-Winter, 1957 (*On Sale*		
What's New in Home Economics—October, 1957 (*On*		

on people will see and read about the fabulous new Singer Slant-O-Matic in the following publications:

	Circulation	Readers
2th)	5,738,000	12,602,000
rd)	4,191,000	8,769,000
September 24th)	5,320,000	6,327,000
)	4,830,000	6,322,000
ptember 19th)	3,815,000	4,827,000
24th)	3,141,000	5,057,000
)	1,686,000	2,356,000
Farm Journal—October, 1957 (*On Sale September 16th*)	3,624,000	7,248,000
Progressive Farmer—October, 1957 (*On Sale September 15th*)	1,315,000	2,898,000
Successful Farming—October, 1957 (*On Sale September 15th*)	1,305,000	3,073,000
McCall's Pattern Book—Winter, 1957 (*On Sale October 20th*)	257,000	514,000
Vogue Pattern Book—Autumn-Winter, 1957 (*On Sale September 5th*)	332,000	664,000
What's New in Home Economics—October, 1957 (*On Sale October 1st*)	40,000	80,000
TOTALS:	35,594,000	60,737,090

Please post this reprint on the bulletin board

Presenting the

SINGER SLANT-O-MATIC...

The finest sewing machine ever built for home or school use

Dramatically new and different in every way, the SINGER® Slant-O-Matic outsews any other machine for both straight and fancy stitching.

It's the most durable automatic zigzag machine you can buy, mechanically perfected for years of service-free operation. With unmatched ease and beauty, it sews on the finest to the most rugged of fabrics without slipping or stalling.

And every sewing group . . . from beginners to the most advanced students . . . will enjoy the Slant-O-Matic's amazing ease of operation. This versatile machine has convenience features never built into any machine before!

Available at school discounts for classroom use and special discounts for clothing teachers' personal use. Portable, cabinet and classroom table models.

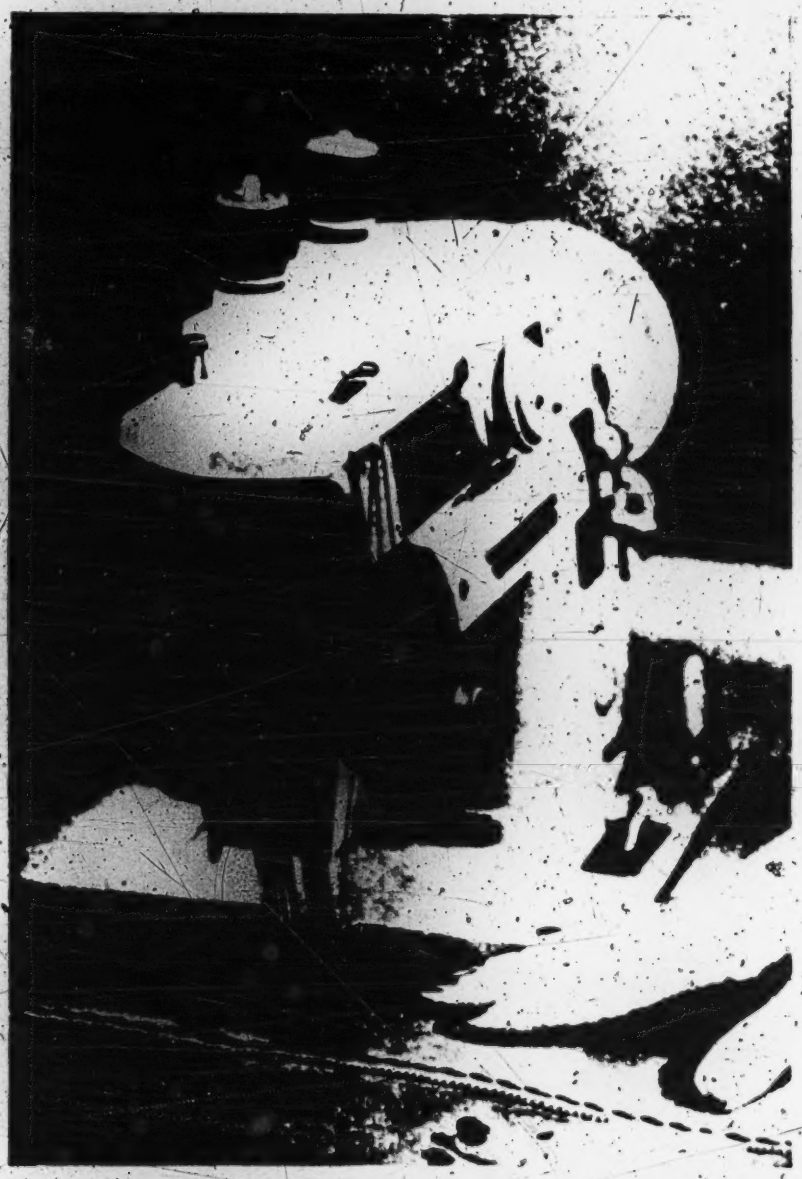

Only the Slant-O-Matic has all these exciting features!

- Only zigzag sewing machine with Slant-Needle for better vision, precise stitching
- Exclusive "drop-in" bobbin in *front* of needle
- Fixed bobbin case—prevents dropping, chipping
- Exclusive elevator throat plate raises by finger-tip control—no feed to drop for darning and embroidery; no tools needed for cleaning, superior fabric handling
- "Tune-in" knob for instant change from straight stitching to hundreds of decorative stitches, buttonholing, overcasting, zigzag seaming
- Snap-up eye-level stitch chart that guides you as you "tune in" infinite decorative stitches
- Only machine with a built-in threading diagram that snaps open for instant instruction
- Gear motor drive for smoothest sewing ever—no belt to wear out or slip
- This machine actually *disengages* its zigzag mechanism to allow superior straight stitching
- Micro-stitch length control that produces up to 200 stitches per inch
- Zero-to maximum tension in one turn for simple tension regulation
- Built-in "safety" thread cutter, scored throat plate for guiding stitching, flexible steel seam guide and many other extras.
- The only zigzag machine made in America for home sewing!

For free folders fully describing the Slant-O-Matic and other supplies and services offered by SINGER write to SINGER SEWING MACHINE CO., Educational Dept., 149 Broadway, N.Y. 6, N.Y. Ask for a demonstration at your SINGER SEWING CENTER.

SINGER SEWING CENTERS

*A trademark of THE SINGER MANUFACTURING CO.
Listed in your phone book under SINGER SEWING MACHINE CO

Catholic School Journal - Feb., '58
What's New In Home Econ. - Feb., '58
Educational Business - Feb., '58
School Management - Feb., '58
Practical Home Economics - Feb., '58

1958

[fol. 5560] IN UNITED STATES DISTRICT COURT

DEFENDANT'S EXHIBIT 156

A present with a future . . . if it's a **SINGER**

New **SINGER Slant-O-Matic** ....

greatest sewing machine ever built

The brilliant new Slant-O-Matic outsews all other sewing machines for both straight and fancy stitching . . . yet it's amazingly *easy* to operate.

It has 24 fabulous features, including the exclusive Slant-Needle for easier seeing, smoother sewing; an exclusive "drop-in" bobbin . . . in *front* of the needle where it's easy to reach; a built-in stitch chart that shows how to "tune in" the fancy stitch you select at the turn of a knob; gear motor drive for *stall-free* sewing.

The only automatic zigzag machine for home use made in America, the SINGER* Slant-O-Matic is built for a *lifetime* of sewing. Comes in cabinets or portable case.

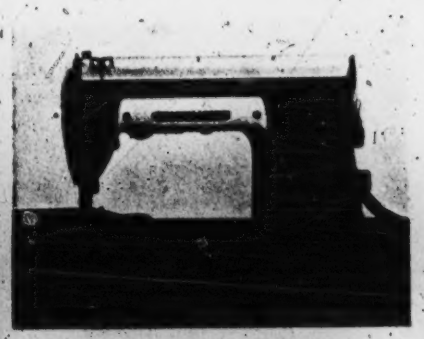

Popular Slant-Needle SINGER. Only straight-stitching machine with a needle that slants forward for better vision, easier sewing. Available with Automatic Zigzagger attachment for decorative stitching.

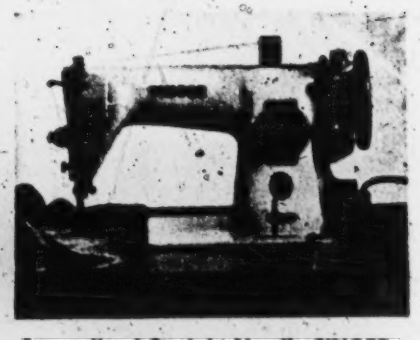

Streamlined Straight-Needle SINGER. Completely modern in every way—does perfect straight stitching. Like every SINGER, it's backed by over 100 years' experience in making the most dependable machines.

Famous FEATHERWEIGHT* Portable. An 11-lb. wonder that travels easily, stores easily, and does the work of a full-sized SINGER even on heavy fabrics! Sturdily built, with all the modern conveniences.

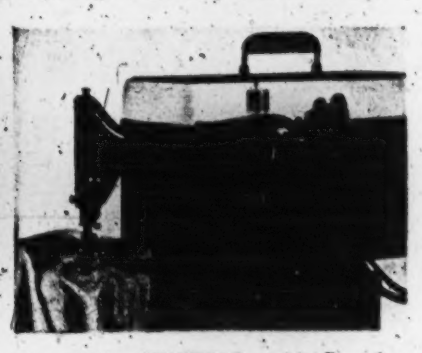

Extra-Value SINGER* Portable. Buy of a lifetime . . . to last a lifetime! Like every new SINGER, comes with a *free* sewing course. SINGER machines available on easy budget terms, with generous trade-in allowance.

A gift for every purse . . . from **SINGER**

SINGER* Sewing Boxes These come in a variety of fabrics, forms and colors to delight young and old alike. From $1.98.

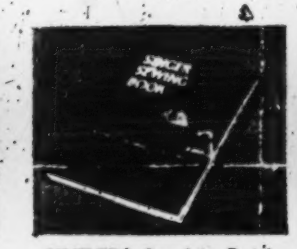

SINGER* Sewing Book 237 pages and pictures of how-to-sew fun for the homemaker. Richly bound. Only $3.95.

SINGER SEWHANDY* For the little lady on your list—a miniature SINGER that really sews! Safe for tiny fingers. Only $9.95.

New **SINGER** Slant-O-Matic ...

greatest sewing machine ever built

The brilliant new Slant-O-Matic outsews all other sewing machines for both straight and fancy stitching . . . yet it's amazingly *easy* to operate.

It has 24 fabulous features, including the exclusive Slant-Needle for easier seeing, smoother sewing; an exclusive "drop-in" bobbin . . . in *front* of the needle where it's easy to reach; a built-in stitch chart that shows how to "tune in" the fancy stitch you select at the turn of a knob; gear motor drive for *stall-free* sewing.

The only automatic zigzag machine for home use made in America, the SINGER* Slant-O-Matic is built for a *lifetime* of sewing. Comes in cabinets or portable case.

Famous FEATHERWEIGHT* Portable. An 11-lb. wonder that travels easily, stores easily, and does the work of a full-sized SINGER even on heavy fabrics! Sturdily built, with all the modern conveniences.

Extra-Value SINGER* Portable. Buy of a lifetime . . . to last a lifetime! Like every new SINGER, comes with a *free* sewing course. SINGER machines available on easy budget terms, with generous trade-in allowance.

A gift for every purse . . . from **SINGER**

SINGER* Sewing Boxes These come in a variety of fabrics, forms and colors to delight young and old alike. From $1.98.

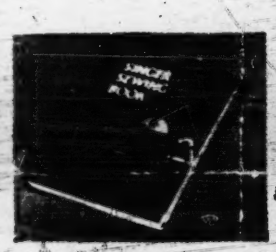

SINGER* Sewing Book 237 pages and pictures of how-to-sew fun for the homemaker. Richly bound. Only $3.95.

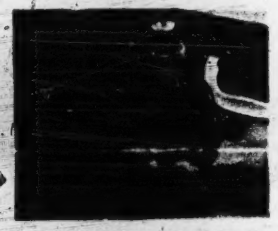

SINGER 'SEWHANDY* For the little lady on your list—a miniature SINGER that really sews! Safe for tiny fingers. Only $9.95.

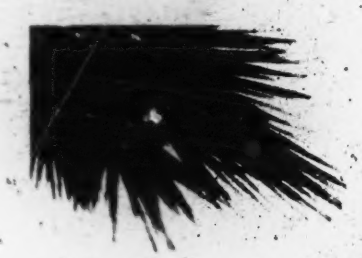

SINGER SEWING CENTERS

Listed in your phone book under SINGER SEWING MACHINE CO.

*A trademark of THE SINGER MANUFACTURING COMPANY

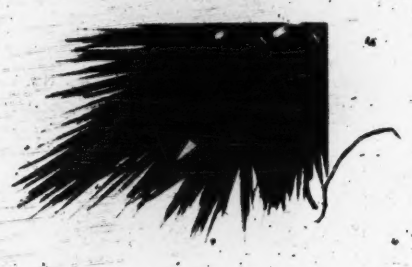

Handsome setting for any **SINGER** . . . one of these new "Designer" Cabinets!

Early American Console. Honey-tone or Salem maple finishes. Note matching stool.

French Provincial Console. Warm, glowing fruitwood finish; flowing lines.

Modern Console. Blond or walnut finish. Both console and stool are brass-tipped.

American Modern Desk. Blond, walnut or mahogany finishes—roomy drawers.

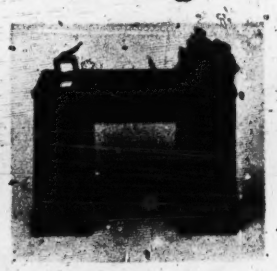

Traditional Desk. Rich mahogany finish, with graceful tiered drawers.

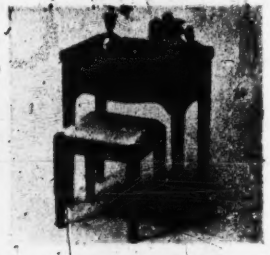

Bow Front Console. Deep or casual mahogany finish—gleaming brass pulls.

This colorful ad featuring Singer Gift Suggestions will appear as follows:

MAGAZINE	ISSUE DATE	APPEARANCE DATE
GOOD HOUSEKEEPING	December, 1957	November 21, 1957
FARM JOURNAL	December, 1957	November 23, 1957
SUCCESSFUL FARMING	December, 1957	November 18-29, 1957
LIFE	December 2, 1957	November 28, 1957
LOOK	December 10, 1957	November 26, 1957
LADIES' HOME JOURNAL	December, 1957	November 26, 1957
McCALL'S	December, 1957	November 21, 1957
PROGRESSIVE FARMER	December, 1957	November 15, 1957
ELECTRICITY ON THE FARM	December, 1957	December 1, 1957

These magazines have a combined readership of over 52,000,000.

Defendant's Exhibit 157

What is zig-zag sewing?

What is zig-zag sewing?

It's what lets a woman breezily pick a designer pattern with "complicated insides." (Zig-zag snips hours off tedious finishing and facings.)

Zig-zag is how you sew smoother seams in drapes, believe it or not . . . and give Johnny's corduroy shirt a new elbow that doesn't stick out like a sore thumb.

It's the modern way to sew on buttons, and add years to the life of every seam. It's what the SLANT-O-MATIC* Machine by SINGER (with its exclusive Slant-Needle) does easier—and better—than any other machine. Why don't you come in and find out about this exciting zig-zag way to sew?

SINGER SEWING CENTERS

Also headquarters for SINGER* Vacuum Cleaners, Rug Cleaner-Floor Polishers
Listed in your phone book under SINGER SEWING MACHINE COMPANY

*A TRADEMARK OF THE SINGER MANUFACTURING COMPANY

PLEASE POST THIS AD REPRINT ON YOUR SHOP BULLETIN BOARD

THIS ADVERTISEMENT APPEARS IN THE FOLLOWING MAGAZINES

WITH A TOTAL CIRCULATION OF 38,555,000

MAGAZINE	DATE ON SALE	MAGAZINE	DATE ON SALE
TRUE STORY—September, 1960	August 4th	PROGRESSIVE FARMER—October, 1960	September 15th
SIMPLICITY PATTERN BOOK—August, 1960	August 15th	FARM JOURNAL—October, 1960	September 17th
EVERY WOMAN'S FAMILY CIRCLE—September, 1960	August 18th	GOOD HOUSEKEEPING—October, 1960	September 20th
SUCCESSFUL FARMING—September, 1960	August 19th	McCALL'S—October, 1960	September 21st
WOMAN'S DAY—September, 1960	August 19th	PARENTS'—October, 1960	September 26th
McCALL'S PATTERN BOOK—August, 1960	August 20th	BUTTERICK PATTERN BOOK—October, 1960	October 1st
LADIES' HOME JOURNAL—September, 1960	August 30th	VOGUE PATTERN BOOK—October, 1960	October 29th
ELECTRICITY ON THE FARM—September, 1960	September 1st		

Defendant's Exhibit 158

DESIGNED EXCLUSIVELY FOR MC CALL'S BY PAULINE TRIGERE—PATTERN NO. 5588

What's the newest slant on holiday sewing?

It has to do with a special needle...and you, of course.

The needle slants forward—so you don't have to. No stretch, no eye strain seeing where you're sewing. (It pierces the fabric *clearly* an inch ahead of the old style straight up and down needles.)

With this slant, lively silks are more controllable. Spirited holiday taffetas stitch up submissively. You can put in a gusset with more than blind faith. Do ticklish top-stitching—boldly.

It's a slant you get *only* with SINGER* Sewing Machines. It's part of what makes the SLANT-O-MATIC* by SINGER the greatest zig-zag machine ever built. Discover this new angle to sewing... now at...

SINGER SEWING CENTERS

Also headquarters for SINGER* Rug and Floor Cleaning Equipment
Listed in your phone book under SINGER SEWING MACHINE CO.
*A Trademark of THE SINGER MANUFACTURING CO.

What's the newest slant on holiday sewing?

It has to do with a special needle:..and you, of course.

The needle slants forward—so you don't have to. No stretch, no eye strain seeing where you're sewing. (It pierces the fabric *clearly* an inch ahead of the old style straight up and down needles.)

With this slant, lively silks are more controllable. Spirited holiday taffetas stitch up submissively. You can put in a gusset with more than blind faith. Do ticklish top-stitching—boldly.

It's a slant you get *only* with SINGER* Sewing Machines. It's part of what makes the SLANT O-MATIC* by SINGER the greatest zig-zag machine ever built. Discover this new angle to sewing ... now at...

SINGER SEWING CENTERS

Also headquarters for SINGER* Rug and Floor Cleaning Equipment
Listed in your phone book under SINGER SEWING MACHINE CO.

*A Trademark of THE SINGER MANUFACTURING CO.

AD #679

WHAT'S THE NEWEST SLANT ON HOLIDAY SEWING?

THIS ADVERTISEMENT WILL APPEAR IN THE FOLLOWING MAGAZINES

WITH A TOTAL CIRCULATION OF 33,400,000

PUBLICATION	DATE ON SALE
TRUE STORY, October, 1960	September 6, 1960
VOGUE PATTERN BOOK, Autumn-Winter, 1960	September 15, 1960
WOMAN'S DAY, October, 1960	September 16, 1960
EVERY WOMAN'S FAMILY CIRCLE, November, 1960	October 20, 1960
McCALL'S PATTERN BOOK, Winter, 1960	October 20, 1960
GOOD HOUSEKEEPING, November, 1960	October 20, 1960
McCALL'S, November, 1960	October 21, 1960
SUCCESSFUL FARMING, November, 1960	October 21, 1960
PARENTS, November, 1960	October 25, 1960
LADIES HOME JOURNAL, November, 1960	October 27, 1960
ELECTRICITY ON THE FARM, November, 1960	November 1, 1960

1553

[fol. 5563] IN UNITED STATES DISTRICT COURT

DEFENDANT'S EXHIBIT 159

Comparative Sales of all Singer Household Sewing Machines for the Years 1958-60

Machine	1958	1959	1960
401	147,446	155,422	155,832
319	4,199	1,028	
404	123	91,922	119,643
301	101,853	34,876	1,851
403		50,269	88,553
306	9,927	13,308	10,399
185	11,670	86,128	82,662
99	115,717	23,884	2,517
192		51,091	64,002
221	47,669	41,432	28,616
15	39,620	16,761	4,822
201	21,785	14,169	6,833
66	13,894	2,487	
Misc.	3,621	1,523	4,619
Total	517,524	584,309	570,349

Source: Singer Statistics.

[fol. 5564]

IN UNITED STATES DISTRICT COURT

DEFENDANT'S EXHIBIT 160

COMPARATIVE SALES OF THE SINGER 401, 403, AND 404 SEWING MACHINES & THEIR PREDECESSORS FOR THE YEARS 1958 - 1960

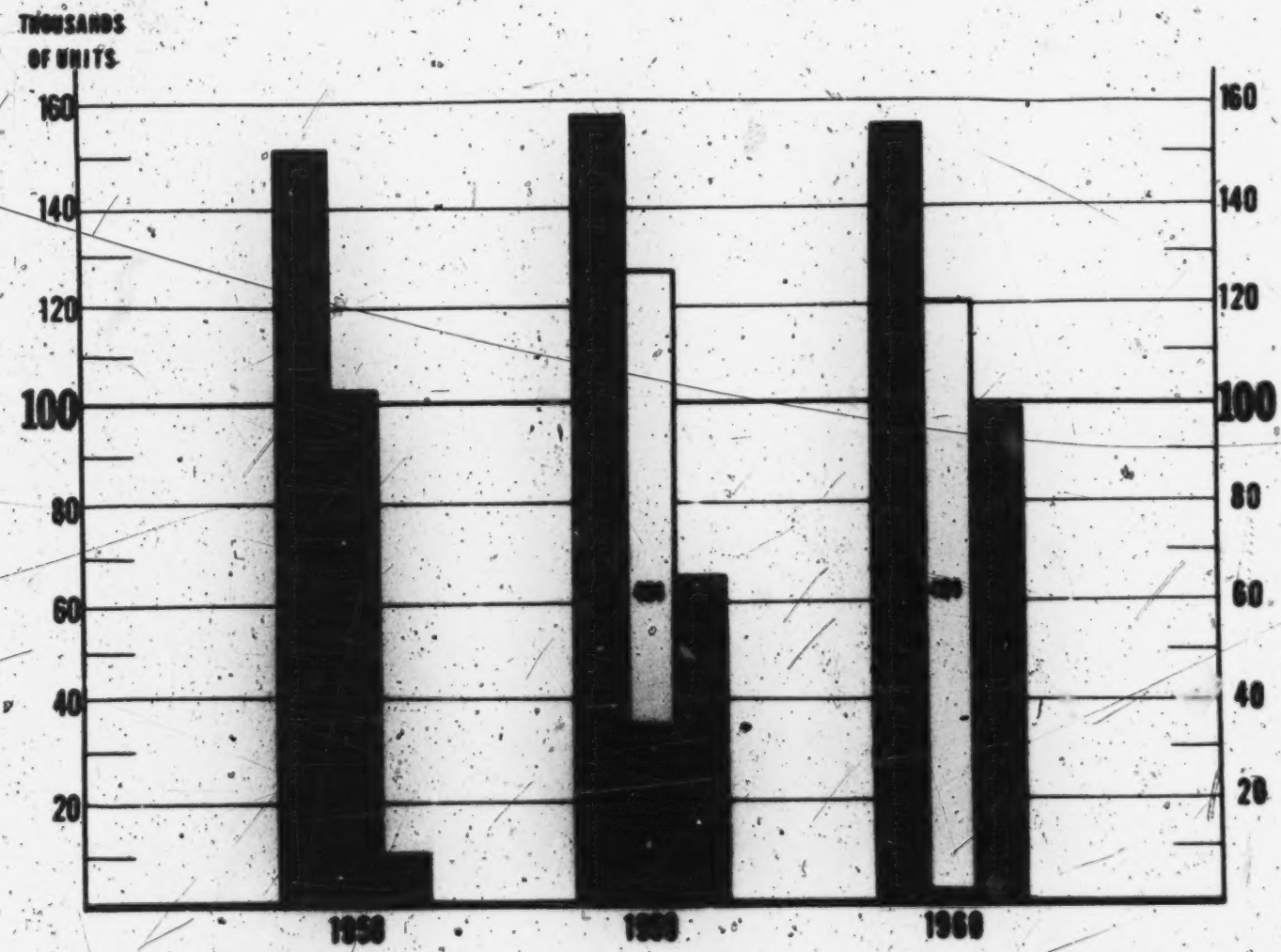

SOURCE: SINGER STATISTICS

[fol. 5565]

IN UNITED STATES DISTRICT COURT

DEFENDANT'S EXHIBIT 161

COMPARISON OF SALES WITH ADVERTISING EXPENDITURES OF THE SINGER 401, 403, & 404 SEWING MACHINES & THEIR PREDECESSORS FOR THE YEARS 1958-1960

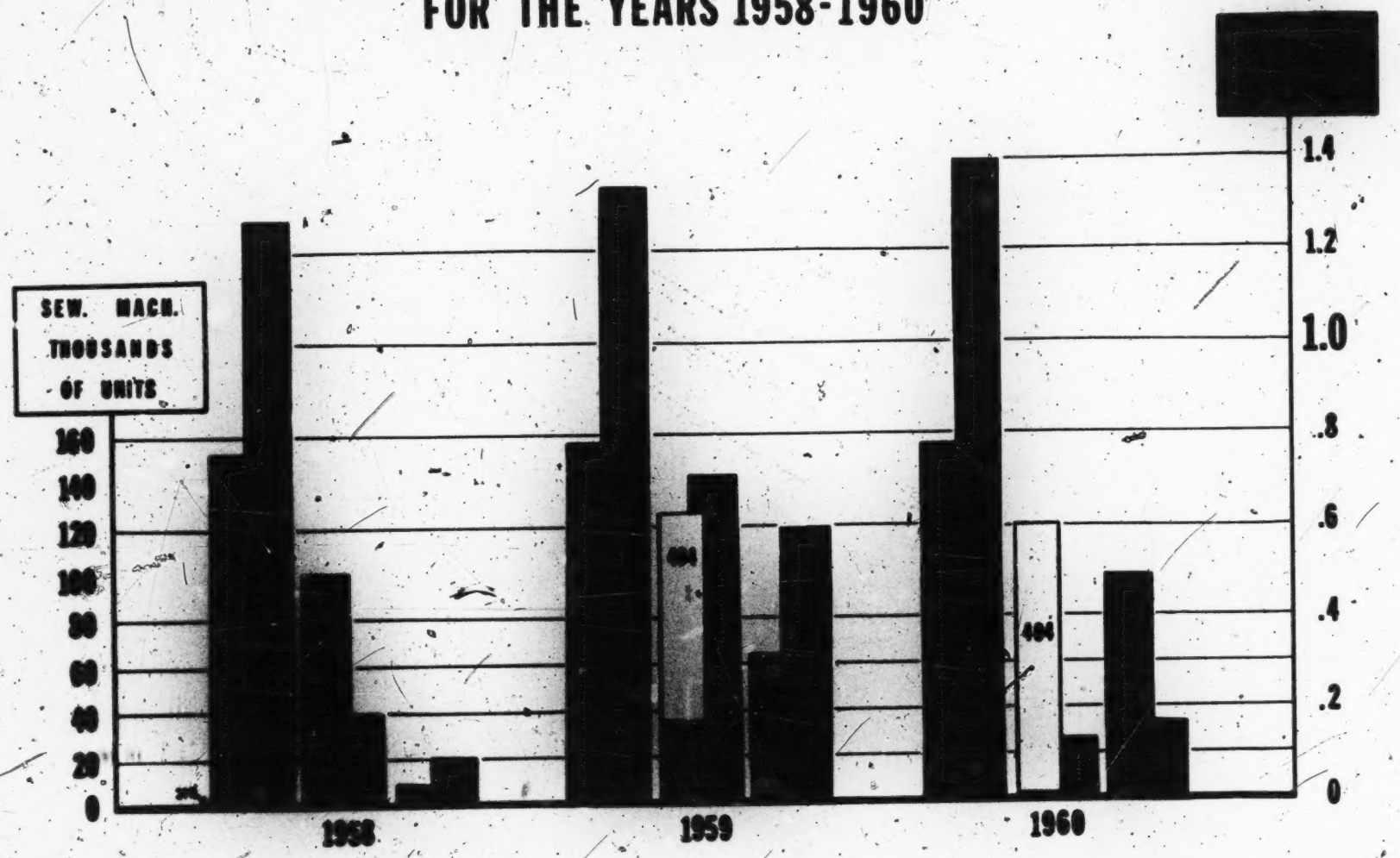

SOURCE: SINGER-STATISTICS

[fol. 5566] IN UNITED STATES DISTRICT COURT

DEFENDANT'S EXHIBIT 162

COMPARATIVE SALES OF ALL SINGER HOUSEHOLD SEWING MACHINES FOR THE YEARS 1958-1960

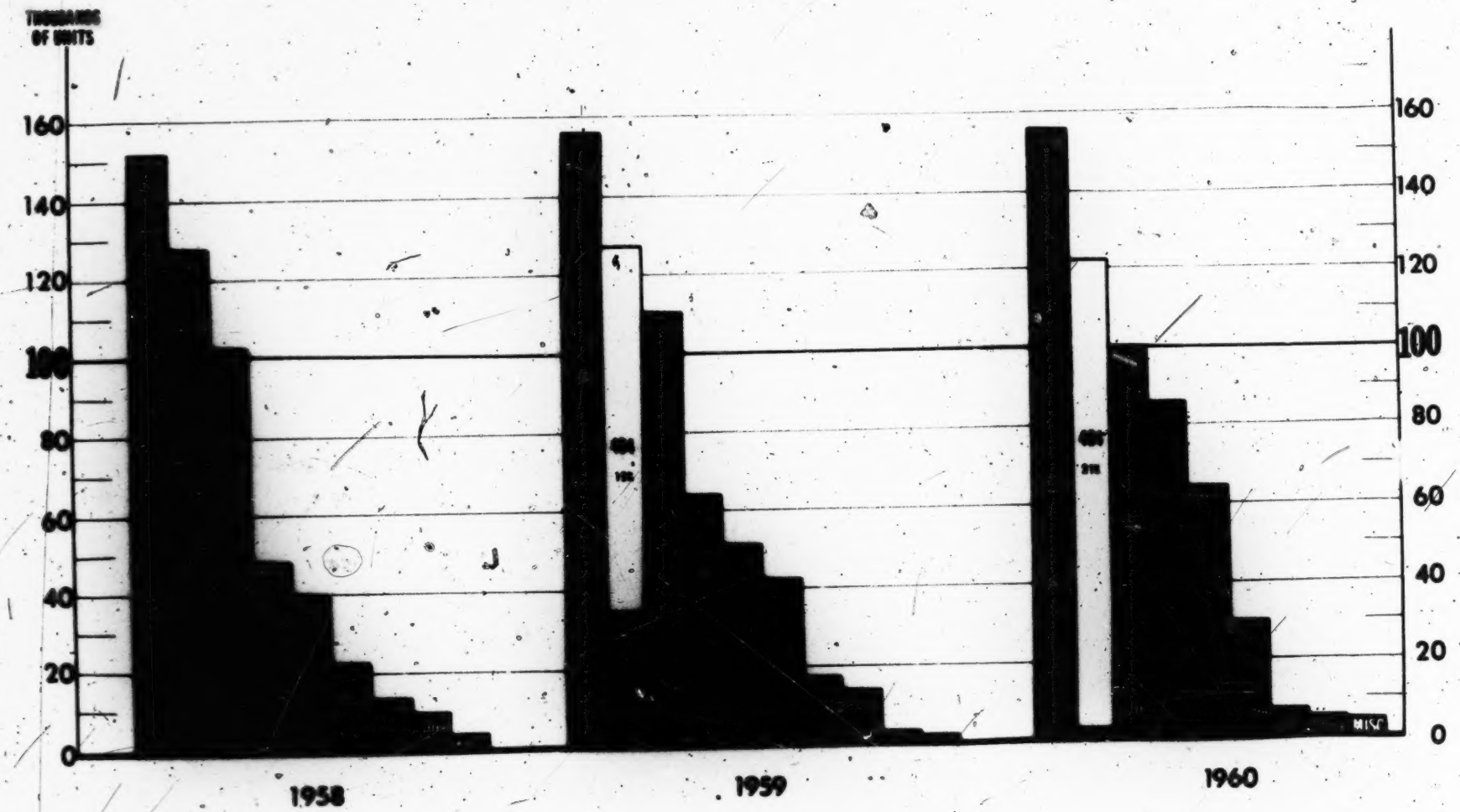

SOURCE: SINGER STATISTICS

[fol. 5567] IN UNITED STATES DISTRICT COURT

DEFENDANT'S EXHIBIT 163

Comparison of Sales with Advertising Expenditures of the Singer 401, 403, and 404 Sewing Machines and Their Predecessors for the Years 1958–1960

	1958	1959	1960
Sales:			
401	147,446	155,422	155,832
219	4,199	1,028	
Advertising:			
401	$1,270,897.16	$1,343,971.60	$1,399,482.59
Sales:			
404	123	91,922	119,643
301	101,853	34,876	1,851
Advertising:			
404		$ 584,997.21	$ 131,617.81
301	$ 197,425.20	$ 127,109.18	
Sales:			
403		50,269	88,553
306	9,927	13,308	10,399
Advertising:			
403		$ 544,568.40	$ 121,312.77
306	$ 103,050	$ 52,288.11	$ 44,365.94

Source: Singer Statistics.

Defendant's Exhibit 164

SINGER

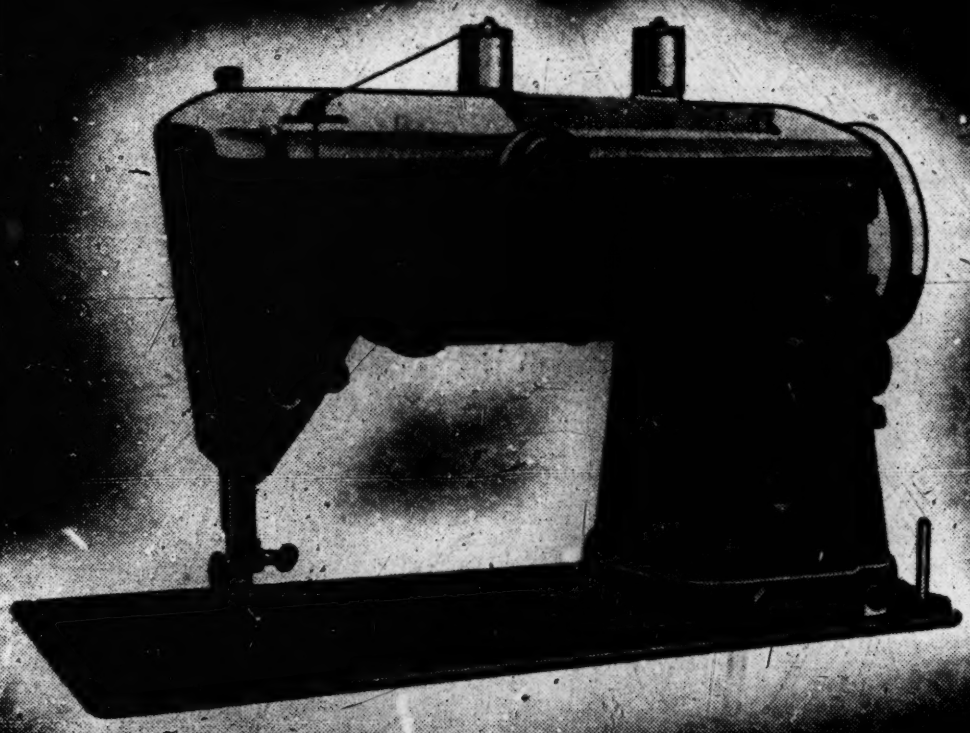

The World's Finest Sewing Machine

YOURS
FOR 3 WHOLE DAYS
to use to your heart's content!

- Try its beautiful decorative stitch patterns!
- Make buttonholes with it!
- Mend, darn, monogram with it!
- Sew on buttons with it!
- Overcast, applique with it!
- Above all, sew with it!

to use to your heart's content!

- Try its beautiful decorative stitch patterns!
- Make buttonholes with it!
- Mend, darn, monogram with it!
- Sew on buttons with it!
- Overcast, applique with it!
- Above all, sew with it!

PHONE TODAY...
IN YOUR HOME TOMORROW!

We want the women of America to know what this marvelous machine will do—what a wonderful new experience *SLANT-O-MATIC* sewing can be!

No deposit required—absolutely no obligation of any kind!

THE SAME OFFER applies to the two beautiful sisters of the fabulous *SLANT-O-MATIC**

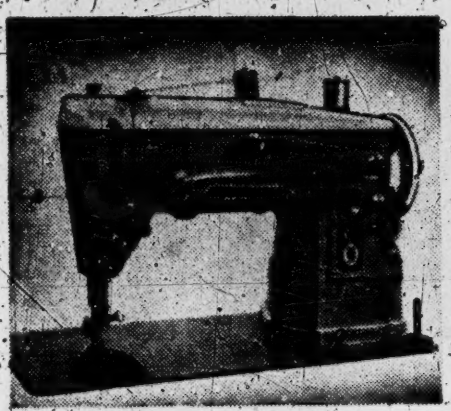

The *SLANT-O-MATIC Special* — lower priced zigzag machine with many *SLANT-O-MATIC* features

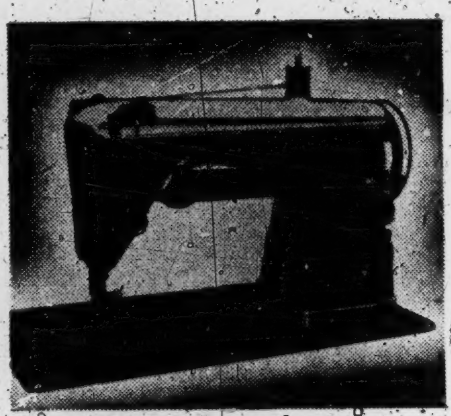

The *SLANT NEEDLE Deluxe*, the world's finest straight stitch machine with a marvelous zigzag attachment

ONLY SINGER* ZIGZAG MACHINES

- ✓ Assure you expert service whenever, wherever you need it
- ✓ Feature a handy drop-in front bobbin, slant-needle sewing, stall-proof gear motor drive, micrometric stitch length adjustment
- ✓ Are made in America by American craftsmen

No matter what you may be told, no sewing machines imported from Japan are made by **SINGER**, *or with* **SINGER*** *parts*

When you can own a machine made by

THE SAME OFFER applies to the two beautiful sisters of the fabulous *SLANT-O-MATIC**

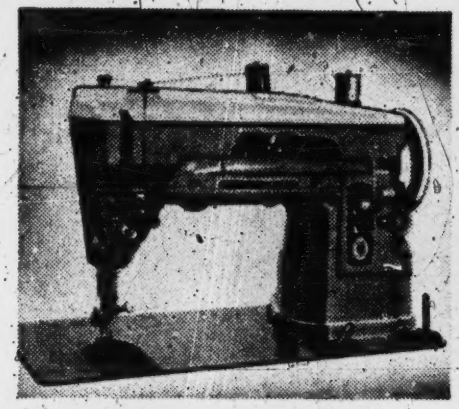

The ***SLANT-O-MATIC Special*** — lower priced zigzag machine with many ***SLANT-O-MATIC*** features

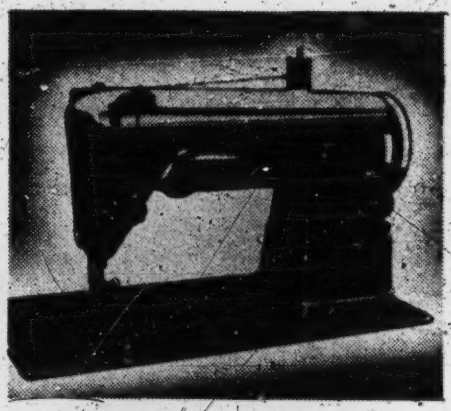

The ***SLANT NEEDLE Deluxe***, the world's finest straight stitch machine with a marvelous zigzag attachment

ONLY SINGER*
ZIGZAG MACHINES

- ✓ Assure you expert service whenever, wherever you need it
- ✓ Feature a handy drop-in front bobbin, slant-needle sewing, stall-proof gear motor drive, micrometric stitch length adjustment
- ✓ Are made in America by American craftsmen

No matter what you may be told, no sewing machines imported from Japan are made by SINGER, or with SINGER* parts

When you can own a machine made by SINGER for as little as $48.88†

...*WHY SETTLE FOR LESS?*

(†Spartan model not illustrated)

Easy Terms on the SINGER Save-as-You-Pay Plan — up to 30 months to pay

SINGER SEWING CENTER

HEADQUARTERS FOR ALL YOUR SEWING AND FLOOR CARE NEEDS

(Listed in phone book under SINGER SEWING MACHINE COMPANY)

*A Trademark of THE SINGER MANUFACTURING COMPANY

[fol. 5574]

IN UNITED STATES DISTRICT COURT

DEFENDANT'S EXHIBIT 168

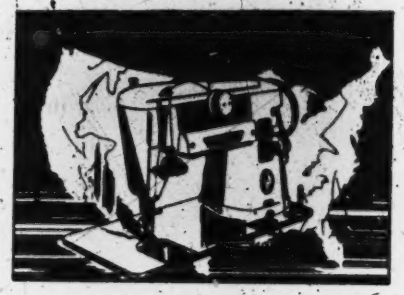

Compare

These important features of the SINGER Slant-o-Matic with machines from 4 other sources

CHECK THESE FEATURES ▶	Slant Needle	Drop-in Top "Front" Bobbin	Positive-Gear Drive Throughout	Full Rotary Sewing Mechanism	Zero to Maximum Tension in 1 Turn	Positive Non-Slip Feeding on all materials	Elevator Throat Plate	Built-in Operating and Threading Charts	Parallel Twin Needle Sewing with 2 standard needles	Ball Joint-Needle Bar Suspension
Slant-o-Matic	Yes	Yes	Yes	Yes	Yes	Yes	Yes	Yes	Yes	Yes
Machine "N"	No	No	No	No	No	No	No	No	No	No
Machine "E"	No	No	No	Yes	Yes	No	No	No	No	No
Machine "P"	No	No	No	Yes	Yes	Yes	No	No	No	No
Machine "V"	No	No	No	Yes	Yes	Yes	No	No	No	No

5031

FORM 900—167 SC

LITHO. IN U.S.A.

[fol. 5575]

In United States District Court

Defendant's Exhibit 169

EXHIBIT
U. S. Dist. Court
S. D. of N. Y.
JUN 5 1
DEFENDANT'S
169

Shop Meeting Guide

SELLING SINGER SUPERIORITY

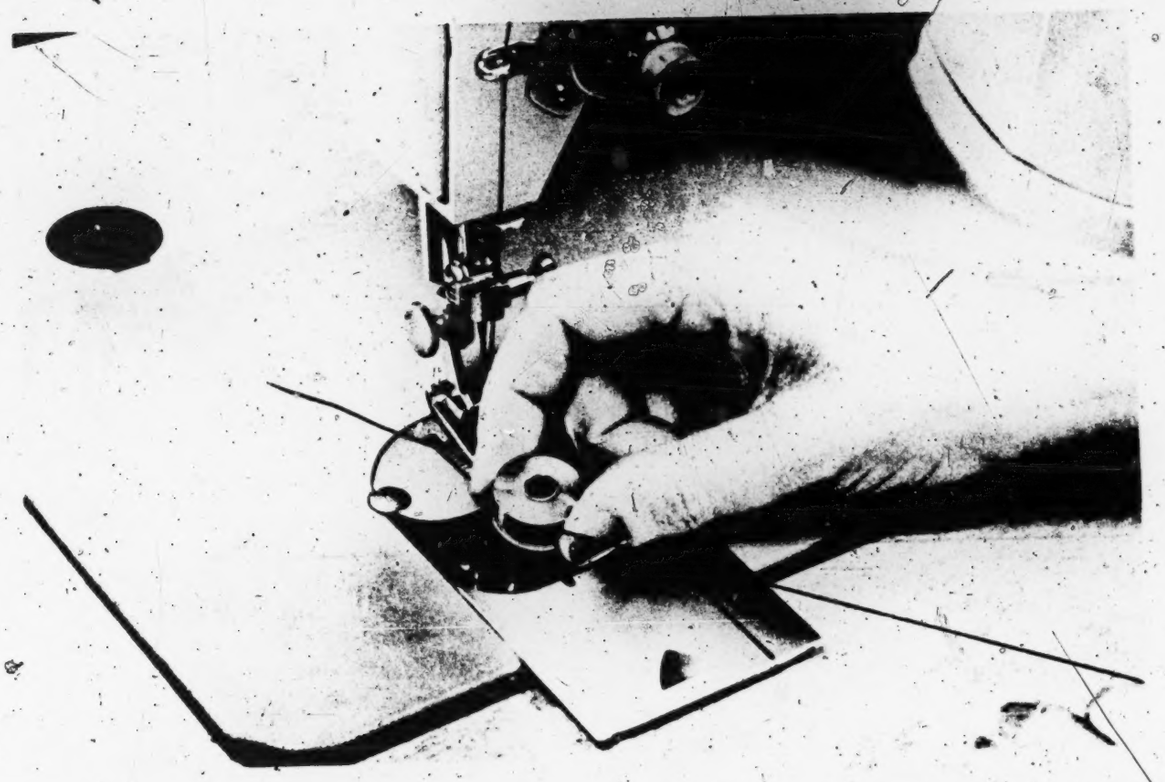

There is a time for creative selling; a time for product selling and a time for persuasive selling. And a good Singer Salesperson knows how and when to use each.

1565

CREATIVE selling is used to build a prospect's desire for a sewing machine and it usually follows the story presented in the first nine pages of FASHIONOMICS emphasizing the fashion advantages of home sewing and the benefits of the wonderful Singer sewing Course Program.

PERSUASIVE selling is used to convince a person whose desire for a sewing machine and preference for a *SINGER* has been established, that *the time to buy is now!* This follows our FASHIONOMICS presentation on Page 11, through the close of the sale.

PRODUCT selling is usually employed after the desire for a Sewing machine has been *acknowledged* and may be used to *prevent* the customer from considering any competitive machine, or in cases where the prospect indicates that she has already been considering a competitive machine.

We recently engaged the services of an independent research organization, which arranged for skilled interviewers to visit 22 Singer Shops located in widely scattered parts of the country. The results of this survey indicate that Singer Salespeople, while fairly competent in creative selling and persuasive selling, are *very weak in product salesmanship.* This probably stems from the fact that many of us are so convinced of Singer product superiority that we assume every prospect feels the same way. This must not be taken for granted and we must assume, whether the prospect mentions it or not, that she may have considered the possibility of the purchase of a competitive machine.

In each of the 22 Shops surveyed, the interviewer named another make machine which she was seriously considering buying and, with one or two exceptions, our people talked in vague generalities about Singer Service, American-produced raw materials, etc. and gave very few concrete reasons why the prospect should select a SINGER.

The story of Singer superiority is only partially covered in the double-page spread on Page 10 of FASHIONOMICS. Here is a checklist of specific points to cover in a good product selling presentation. The more the customer indicates that she is considering another machine, the more thoroughly this checklist should be covered:

Section "A"
The Slant Needle Series

1. **Full-geared rotary mechanism.**
   a. **Whisper-quiet.**
   b. **No vibration.**
   c. **Longer trouble-free operation.**
   d. **Higher speed.**
   e. **More accurate speed control.**
2. **Automotive type gear-motor drive.**
   a. **No belt to slip, stretch or break.**
   b. **The motor has a firm positive grip and can do a better job of driving the machine.**
3. **Exclusive Slant Needle construction.**
   a. **Sit better, see better, sew better. The needle pierces the material at an angle as in hand sewing. This is especially important when sewing delicate, sheer fabric.**
4. **Made in America—with American 'know how' by skilled Singer American craftsmen.**

Section "B"
All Singer Sewing Machines

5. **A matched team of machine, motor and speed controller. In many competitive machines these three elements are made in different factories and, according to independent testing laboratories, this is a potential source of trouble.**
6. **Die-cast aluminum body (except the "185" and the SPARTAN model "192"). This is rugged construction, but the machines are light and *really* portable. In most cases, our machines, as portables, are 20 lbs. lighter than many competitive models. Some competitive models have to provide a special derrick-type lifting device to simply lift the head into a sewing position on the cabinet. No derrick is provided for lifting the portable from the floor to the table. This is one of the greatest weaknesses of competitive portable machines.**

[Fol. 5577]

Singer Superiority Check List

Section "A"
The Slant Needle Series

1. Full-geared rotary mechanism.
   a. Whisper-quiet.
   b. No vibration.
   c. Longer trouble-free operation.
   d. Higher speed.
   e. More accurate speed control.
2. Automotive type gear-motor drive.
   a. No belt to slip, stretch or break.
   b. The motor has a firm positive grip and can do a better job of driving the machine.
3. Exclusive Slant Needle construction.
   a. Sit better, see better, sew better. The needle pierces the material at an angle as in hand sewing. This is especially important when sewing delicate, sheer fabric.
4. Made in America—with American 'know how' by skilled Singer American craftsmen.

Section "B"
All Singer Sewing Machines

5. A matched team of machine, motor and speed controller. In many competitive machines these three elements are made in different factories and, according to independent testing laboratories, this is a potential source of trouble.
6. Die-cast aluminum body (except the "185" and the SPARTAN model "192"). This is rugged construction, but the machines are light and *really* portable. In most cases, our machines, as portables, are 20 lbs. lighter than many competitive models. Some competitive models have to provide a special derrick-type lifting device to simply lift the head into a sewing position on the cabinet. No derrick is provided for lifting the portable from the floor to the table. This is one of the greatest weaknesses of competitive portable machines.
7. SINGER machines are built by SINGER from precision parts made by SINGER, not just assembled from parts purchased from various manufacturers. Thus, Singer quality is controlled from beginning to end.
8. Because parts are truly precision-made, a replacement never requires expensive 'filing and fitting'.
9. Singer parts and service are always available everywhere.
10. The broadest guarantee in the industry, covering motor as well as machine, and backed by the most dependable company in the industry. The same company makes, sells and guarantees the machine.
11. Maximum resale value.
12. Competent instruction in the care and use of the machine.
13. SINGER sewing machines are used in over 90% of all schools and colleges in North America.
14. Continuity of manufacture. Singer factories will always be making SINGER sewing machines. Some factories making competitive sewing machines may suddenly switch to other products.
15. SINGER machines have a hand-rubbed, electrostatic, jewel-like finish (glareproof) that lasts for years, and years and years.
16. Most SINGER machines have a convenient "drop-in-top" bobbin. No lost or broken bobbin cases, pinched fingers or awkward bobbin case manipulation.
17. Micro-stitch length control.
18. Calibrated single turn tension dial.
19. Full range speed control from a crawl to top speed. Like a modern car, it requires no shifting for low or high speeds.
20. SINGER light — rated outstanding by independent testing laboratories.
21. 110 years of specialized and dedicated skill and experience.
22. SINGER machines operate "like new" for years and they cost far less to own than any other make regardless of their *initial* cost.

15577

PRINTED IN U.S.A.

7. SINGER machines are built by SINGER from precision parts made by SINGER, not just assembled from parts purchased from various manufacturers. Thus, Singer quality is controlled from beginning to end.

8. Because parts are truly precision-made, a replacement never requires expensive 'filing and fitting'.

9. Singer parts and service are always available everywhere.

10. The broadest guarantee in the industry, covering motor as well as machine, and backed by the most dependable company in the industry. The same company makes, sells and guarantees the machine.

11. Maximum resale value.

12. Competent instruction in the care and use of the machine.

13. SINGER sewing machines are used in over 90% of all schools and colleges in North America.

14. Continuity of manufacture. Singer factories will always be making SINGER sewing machines. Some factories making competitive sewing machines may suddenly switch to other products.

15. SINGER machines have a hand-rubbed, electrostatic, jewel-like finish (glareproof) that lasts for years, and years and years.

16. Most SINGER machines have a convenient "drop-in-top" bobbin. No lost or broken bobbin cases, pinched fingers or awkward bobbin case manipulation.

17. Micro-stitch length control.

18. Calibrated single turn tension dial.

19. Full range speed control from a crawl to top speed. Like a modern car, it requires no shifting for low or high speeds.

20. SINGER light — rated outstanding by independent testing laboratories.

21. 110 years of specialized and dedicated skill and experience.

22. SINGER machines operate "like new" for years and they cost far less to own than any other make regardless of their *initial* cost.

CONCLUSION Each of us will be supplied with this overwhelming checklist of facts to use in product salesmanship, for insertion in our FASHIONOMICS binder. At our next meeting, everyone will be asked to list these facts from memory. Let's see who can do the best job and let's resolve that from here on in we will be just as effective in our product salesmanship as we are in our creative and persuasive salesmanship.

[fols. 5599-5600] IN UNITED STATES DISTRICT COURT

DEFENDANT'S EXHIBIT 172

Production and Sales in the United States of Singer Household Sewing Machines for the Years 1947 Through 1959

Year	Production	Sales
1947	349,932	291,515
1948	438,370	359,121
1949	275,858	379,156
1950	588,559	530,288
1951	528,035	496,278
1952	503,975	519,760
1953	477,454	510,220
1954	444,486	584,740
1955	561,299	587,462
1956	534,981	570,843
1957	330,333	507,417
1958	321,818	517,524
1959	365,074	584,295

[fol. 5601] IN UNITED STATES DISTRICT COURT

DEFENDANT'S EXHIBIT 173

150. Exhibits S-432 to S-500 are true copies of genuine original advertisements which respectively appeared in the mail order catalog listed below, which catalog was distributed in the United States to the public during the period set forth opposite the Exhibit number:

S-432	Wards	Fall-Winter 1960
S-433	Wards	Fall-Winter1960
S-434	Wards	Spring-Summer 1960
S-435	Wards	Spring-Summer 1960
S-436	Wards	Fall-Winter 1959
S-437	Wards	Fall-Winter 1959
S-438	Wards	Spring-Summer 1959
S-439	Wards	Spring-Summer 1959
S-440	Wards	Fall-Winter 1958
S-441	Wards	Fall-Winter 1958
S-442	Wards	Spring-Summer 1958
S-443	Wards	Spring-Summer 1958
S-444	Wards	Fall-Winter 1957
S-445	Wards	Fall-Winter 1957
S-446	Wards	Spring-Summer 1957
S-447	Wards	Spring-Summer 1957
S-448	Sears	Fall-Winter 1960
S-449	Sears	Fall-Winter 1960
S-450	Sears	Fall-Winter 1960
S-451	Sears	Fall-Winter 1960
S-452	Sears	Spring-Summer 1960
S-453	Sears	Spring-Summer 1960
S-454	Sears	Spring-Summer 1960
S-455	Sears	Spring-Summer 1960
S-456	Sears	Fall-Winter 1959
S-456A	Sears	Fall-Winter 1959

[fol. 5602]

S-457	Sears	Fall-Winter 1959
S-458	Sears	Fall-Winter 1959
S-459A	Sears	Spring-Summer 1959
S-459	Sears	Spring-Summer 1959
S-460	Sears	Spring-Summer 1959
S-461	Sears	Spring-Summer 1959
S-462	Sears	Fall-Winter 1958
S-463	Sears	Fall-Winter 1958
S-464	Sears	Fall-Winter 1958
S-465	Sears	Spring-Summer 1958
S-466	Sears	Spring-Summer 1958
S-467	Sears	Spring-Summer 1958
S-468	Sears	Fall-Winter 1957
S-469	Sears	Fall-Winter 1957
S-470	Sears	Fall-Winter 1957
S-471	Sears	Spring-Summer 1957
S-472	Sears	Spring-Summer 1957
S-473	Sears	Spring-Summer 1957
S-474	Spiegels	Fall-Winter 1960
S-475	Spiegels	Fall-Winter 1960

S–477A	Spiegels	Fall-Winter 1959
S–478A	Spiegels	Fall-Winter 1959
S–478	Spiegels	Spring-Summer 1959
S–479	Spiegels	Spring-Summer 1959
S–480	Spiegels	Fall-Winter 1958
S–481	Spiegels	Fall-Winter 1958
S–484	Spiegels	Spring-Summer 1957
S–485	Spiegels	Spring-Summer 1957
S–486	Aldens	Fall-Winter 1960
S–487	Aldens	Fall-Winter 1960

[fols. 5603-5604]

S–490	Aldens	Fall-Winter 1959
S–491	Aldens	Fall-Winter 1959
S–492	Aldens	Spring-Summer 1959
S–493	Aldens	Spring-Summer 1959
S–494	Aldens	Fall-Winter 1958
S–495	Aldens	Fall-Winter 1958
S–496	Aldens	Spring-Summer 1958
S–496A	Aldens	Spring-Summer 1958
S–497	Aldens	Fall-Winter 1957
S–498	Aldens	Fall-Winter 1957
S–499	Aldens	Spring-Summer 1957
S–499A	Aldens	Spring-Summer 1957
S–500	Aldens	Spring-Summer 1957

EXHIBIT S-433

5-433

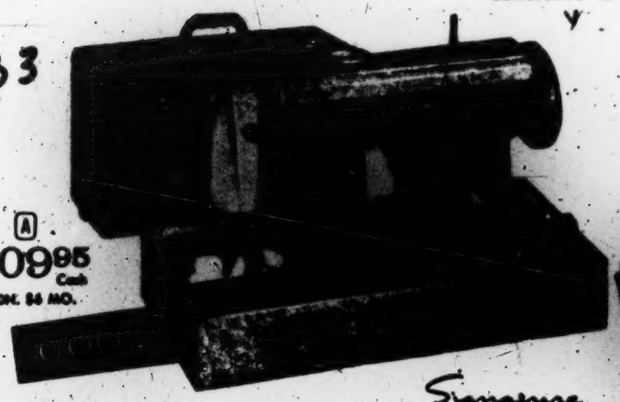

(A) $109.95 Cash
$5 DN. $6 MO.

Signature

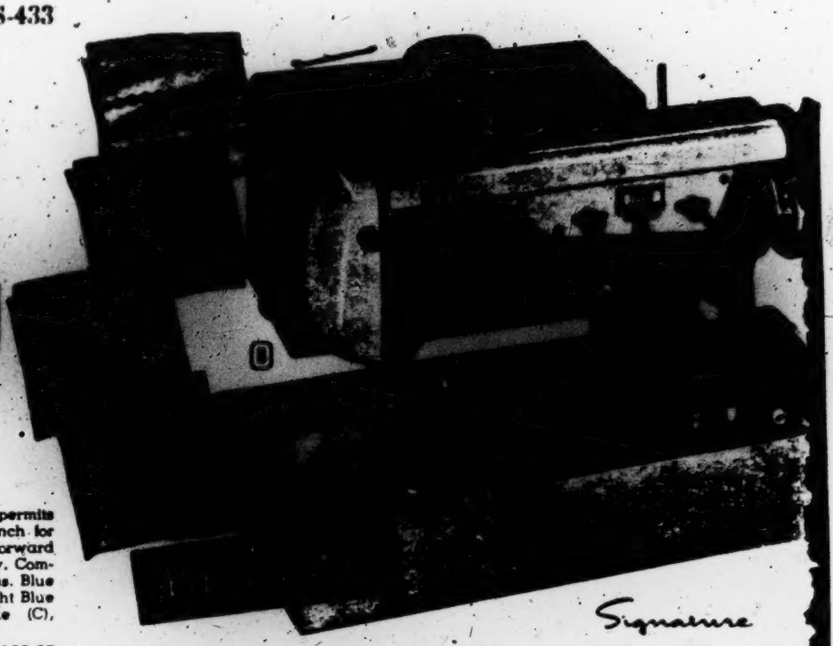

Signature

Automatic 8-Cam Zig-Zag

(A) **Fully Automatic 8-Cam Zig-Zag for Only $109.95!** Gives a truly remarkable performance for this low price.

Make Thousands of Fancy Stitches, blind hem, mend, darn, sew on buttons and lace, make buttonholes, applique, embroider—all these without using a single attachment. So simple, so easy to operate.

Simply Drop One of the 8 Cams on the Spindle and sew. Each cam is marked with its own distinctive design to help start its pattern at the beginning. Performs all-important straight-sewing too, with really professional-looking results.

Has All Features Described in Panel Below, plus built-in light with off/on switch to light your work, thread cutter, variable speed foot control. Handy stitch control permits adjustment from 6 to 36 stitches per inch for infinite variety. Handy lever controls forward and reverse—makes backtacking easy. Complete with accessory kit and instructions. Blue enamel head—chrome-plated trim; Light Blue Pyroxylin-covered carrying case like (C), opposite page.

85 C 1989 R—Ship. wt. 47 lbs. . . . Cash **$109.95**

Deluxe Manual Zig-Zag for the price of many straight-stitch machines, Like (A), except zig-zag stitching is controlled manually by a lever conveniently located on front of machine. Accessories, case like (C).

85 C 1789 R—Wt. 46 lbs. $5 Mo. . . . Cash **$84.95**

All Machines by Pct., Tel., or Exp. unless Mail is stated. UL-appr. 110-120-V. AC.-DC.

Automatic 16-Cam Zig-Zag

$129.95 $5 DOWN, $7 MONTHLY

(B) **Here It Is . . . Only $129.95!** Finest medium priced automatic zig-zag we know of. Compare feature for feature.

Each Magic-Jewel Cam has its own distinctive design—each engineered to start pattern at the beginning, not in the middle. No "trial-test" on separate material; just drop on your pattern cam and sew.

All Features Listed Below PLUS Built-in light with on/off switch; snap-lock darner release; thread cutter, snap-out race; rotary-link take-up is easy to thread, lessens noise and vibration.

Push-Button Reverse Feed for instant, easy back-tacking. Pushbutton drop feed makes darning easy. Foot control.

Fine Straight Sewing, too. Blind hemming can scarcely be told from hand work. Overcasts edges perfectly, gives professional finish, protects seams from raveling.

Thousands of Fancy Stitches Without Effort. Also darns; mends; makes buttonholes; sews on lace, piping and buttons; appliques and embroiders—all without attachment.

Enjoy Your New Machine as You Pay for It—with the money you save by making clothes for yourself and family; gifts for others; expensive looking table linens, curtains, etc. This machine can pay for itself in savings.

For a Few Dollars More a Month own this machine in a handsome cabinet, below.

Modern head, enameled in beautiful decorator Coral-Pink and Off-White. Two-tone Brown, lightweight Pyroxylin-covered case. Accessory Kit and instructions.

85 C 1780 R—Wt. 47 lbs. . . . . Cash **$129.95**

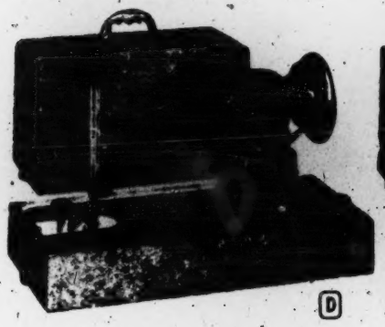

(D)

(E)

Straight Stitch . . . Full Size

$39.50 Head and Base
ONLY $4 MONTHLY

$59.95 Head, Base and Case
ONLY $5 MONTHLY

(D) **Has all features at right, plus many features of our higher priced models.** Forward-reverse control—back-tacks easily. Stitch control adjusts from 6 to 36 stitches per inch. Thread cutter on needle bar; snap-out race; snap-lock darner; variable-speed foot control.

So easy even a beginner can run it after a few minutes practice. Accessory kit included: bobbins, needles, screw drivers and oil can. Instructions. To further your sewing pleasure order attachments (M) (N) (P), facing page.

Same head in a handsome Console or Desk sold below—at unusually low prices and only a few dollars more a month. Head finished in glossy Black porcelain enamel with triple-plated chrome trim on Light-Blue base. Ship. wt. 39 lbs. *Mailable.*

85 C 1018 YO—$4 Down, $4 Mo. . . . Cash **$39.50**

(D) With Carrying Case Like (C). $5 Down.

85 C 1118 YO—Ship. wt. 44 lbs. . . . . Cash **$59.95**

(E) **New, Modern Design in a Low-Priced Straight Stitch Machine.** This deluxe unit will perform smoothly, easily for the beginner as well as the experienced woman who wants a straight-stitch machine. Designed to perform all the functions of machine at left with greater ease.

Add to Your Sewing Pleasure, Productivity with accessories (M) (N) and (P), sold on opposite page. Has all features described in panel at right.

For Only a Few Dollars More Per Month you can own this beautiful sewing head complete with one of the handsome cabinets sold in the ordering table, below. Choose from four elegant cabinet styles, three hardwood finishes.

Accessory Kit Includes: Bobbins, needles, screw drivers, oil can and instructions. Head finished in attractive Beige and Tan with triple-plated chrome trim—matching carrying case covered with Pyroxylin. Wt. 45 lbs.

85 C 1717 MO—*Mailable*. . . . . Cash **$59.95**

Signature Does

YOU DO THE CREATING . . .

ALL WARDS MACHINES HAVE

AUTOMATIC BOBBIN WINDER winds thread evenly, disengages when bobbin is full.

HINGED PRESSER FOOT floats over pins and heavy fabrics—eliminates tedious basting.

ROUND BOBBIN ACTION is smooth, fast and quiet. Bobbin is easily refilled, threaded and replaced.

Make Thousands of Fancy Stitches, blind hem, mend, darn, sew on buttons and lace, make buttonholes, applique, embroider—all these without using a single attachment. So simple, so easy to operate.

Simply Drop One of the 8 Cams on the Spindle and sew. Each cam is marked with its own distinctive design to help start its pattern at the beginning. Performs all-important straight-sewing too, with really professional-looking results.

Has All Features Described in Panel Below plus built-in light with off/on switch to light your work, thread cutter, variable and reverse—makes buttonholes, darns, plete with accessory kit and instructions. Blue enamel head—chrome-plated trim; Light Blue Pyroxylin-covered carrying case like (C), opposite page.

85 C 1989 R—Ship. wt. 47 lbs....Cash **$109.95**

Deluxe Manual Zig-Zag for the price of many straight-stitch machines. Like (A), except zig-zag stitching is controlled manually by a lever conveniently located on front of machine. Accessories, case like (C).

85 C 1789 R—Wt. 46 lbs. $5 Mo....Cash **$84.95**

All Machines by Frt., Trk., or Exp. unless Mail is stated. Uit-oppr. 110-120-V. AC.-DC.

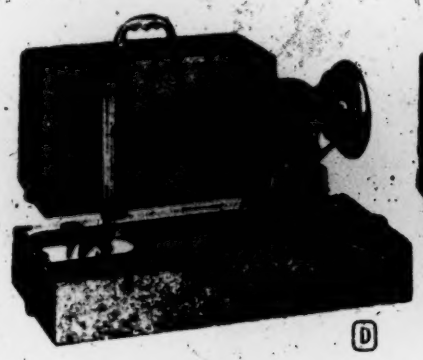

(D)

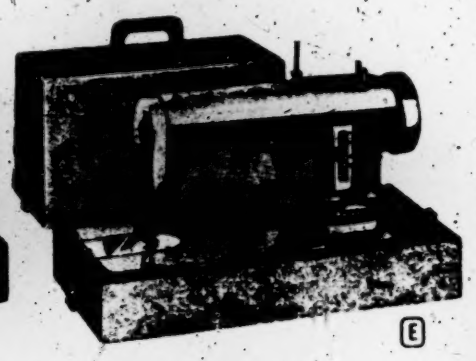

(E)

Straight Stitch . . . Full Size

$39.50 Head and Base — ONLY $4 MONTHLY

$59.95 Head, Base and Case — ONLY $5 MONTHLY

(D) **Has all features at right, plus many features of our higher priced models.** Forward-reverse control—back-tacks easily. Stitch control adjusts from 6 to 36 stitches per inch. Thread cutter on needle bar; snap-out race; snap-lock darner; variable-speed foot control.

So easy even a beginner can run it after a few minutes practice. Accessory kit included: bobbins, needles, screw drivers and oil can. Instructions. To further your sewing pleasure order attachments (M) (N) (P), facing page.

Same head in a handsome Console or Desk sold below—at unusually low prices and only a few dollars more a month. Head finished in glossy Black porcelain enamel with triple-plated chrome trim on Light-Blue base. Ship. wt. 39 lbs. *Mailable.*

85 C 1018 YO—$4 Down, $4 Mo....Cash **$39.80**

(D) With Carrying Case Like (C). $5 Down.

85 C 1118 YO—Ship. wt. 44 lbs.....Cash **$59.95**

(E) **New, Modern Design is a Low-Priced Straight Stitch Machine.** This deluxe unit will perform smoothly, easily for the beginner as well as the experienced woman who wants a straight-stitch machine. Designed to perform all the functions of machine at left with greater ease.

Add to Your Sewing Pleasure, Productivity with accessories (M), (N) and (P), sold on opposite page. Has all features described in panel at right.

For Only a Few Dollars More Per Month you can own this beautiful sewing head complete with one of the handsome cabinets sold in the ordering table, below. Choose from four elegant cabinet styles, three hardwood finishes.

Accessory Kit Includes: Bobbins, needles, screw drivers, oil can and instructions. Head finished in attractive Beige and Tan with triple-plated chrome trim—matching carrying case covered with Pyroxylin. Wt. 45 lbs.

85 C 1717 MO—*Mailable*.....Cash **$59.95**

BETTER

Signature

Automatic 16-Cam Zig-Zag

$129.95 $5 DOWN, $7 MONTHLY

(B) **Here It Is . . . Only $129.95!** Finest medium priced automatic zig-zag we know of. Compare feature for feature.

Each Magic Jewel Cam has its own distinctive design—each engineered to start pattern at the beginning, not in the middle. No "trial-test" on separate material; just drop on your pattern cam and sew.

All Features Listed Below PLUS Built-in light with on/off switch; snap-lock darner release; thread cutter, snap-out race; rotary-link take-up is easy to thread, lessens noise and vibration.

Push-Button Reverse Feed for instant, easy back-tacking. Pushbutton drop feed makes darning easy. Foot control.

Fine Straight Sewing, too. Blind hemming can scarcely be told from hand work. Overcasts edges perfectly, gives professional finish, protects seams from raveling.

Thousands of Fancy Stitches Without Effort. Also darns; mends; makes buttonholes; sews on lace, piping and buttons; appliques and embroiders—all without attachment.

Enjoy Your New Machine as You Pay for It—with the money you save by making clothes for yourself and family; gifts for others; expensive looking table linens, curtains, etc. This machine can pay for itself in savings.

For a Few Dollars More a Month own this machine in a handsome cabinet, below.

Modern head, enameled in beautiful decorator Coral-Pink and Off-White. Two-tone Brown; lightweight Pyroxylin-covered case. Accessory Kit and instructions.

85 C 1780 R—Wt. 47 lbs.....Cash **$129.95**

Signature Does

YOU DO THE CREATING...

ALL WARDS MACHINES HAVE

AUTOMATIC BOBBIN WINDER winds thread evenly, disengages when bobbin is full.

HINGED PRESSER FOOT floats over pins and heavy fabrics—eliminates tedious basting.

ROUND BOBBIN ACTION is smooth, fast and quiet. Bobbin is easily refilled, threaded and replaced.

BUY WISELY—BUY AT WARDS . . . SATISFACTION

Four Fine Furniture Sewing Cabinets of Real Wood . . .

(F) TO (L) **Only A Little More Each Month** buys any of the sewing heads described above complete with a fine real wood cabinet.

Ward Cabinets Are Built Solid with genuine hardwood veneers of your choice. They are delivered to you completely assembled—legs firmly attached—no "screw-ins."

Top Folds Out to form large, convenient worktable on all models except (F), which has 40-in. width and performs triple duty as vanity, desk and sewing console. 19½x24½-in. mirror available to complete vanity ensemble—see chart. All models include variable-speed knee control, leaving both hands free to guide fabrics.

(H) 360° Swivel Chair. Black tubular steel. White, Black, Gold Duran padded seat. 18 in. high. Ship. wt. 11 lbs.

85 C 607—*Mailable*....$6.95

Cabinet Type	Catalog No.	Machine	Ship. wt.	Dn.	Mo.	Cash
(F) Vanity Desk Console. 17x40x29 in. high. 2 spacious drawers. Desk pad included. *State Finish:* Mahogany, Walnut or Blond.	85 C 4718R	(D)	78 lbs.	$5	$5	899.95
	85 C 4717R	(E)	80 lbs.	5	6	109.95
	85 C 4779R	(A) Manual	81 lbs.	5	7	134.95
	85 C 4789R	(A) Automatic	82 lbs.	5	8	159.95
	85 C 4780R	(B)	82 lbs.	5	9.50	179.95
	85 C 4728R	(C)	82 lbs.	10	10.50	209.95
(G) Mirror for (F).	85 C 650R *State Finish:* Mah., Wal. Bind, Wt. 17 lbs.					14.95
(J) Console Styling. 17x22x30½ in. high. Top opens to 44 in. *State Finish:* Mahogany or Walnut.	85 C 4618R	(D)	62 lbs.	5	5	89.95
	85 C 4617R	(E)	64 lbs.	5	5	79.95
	85 C 4679R	(A) Manual	65 lbs.	5	6	104.95
	85 C 4689R	(A) Automatic	66 lbs.	5	7	129.95
	85 C 4680R	(B)	66 lbs.	5	7	149.95
	85 C 4628R	(C)	66 lbs.	5	9.50	184.95
(K) Modern, 2 Drawer Kneehole Desk. 17x29¼x30½ in. high. Top opens to 48¼ in. Recessed hand grips. *State Finish:* Mahogany, Walnut or Blond.	85 C 4518R	(D)	87 lbs.	5	6	119.95
	85 C 4517R	(E)	89 lbs.	5	7	129.95
	85 C 4579R	(A) Manual	90 lbs.	5	8	154.95
	85 C 4589R	(A) Automatic	91 lbs.	5	9.50	179.95
	85 C 4580R	(B)	91 lbs.	5	10	189.95
	85 C 4528R	(C)	91 lbs.	10	11.50	224.95
(L) Traditional Console. 17¾x22x30½ in. high. Top opens to 44 in. Hinged storage door with plastic tray. *State Finish:* Mahogany, Walnut or Blond.	85 C 4218R	(D)	65 lbs.	5	5	79.95
	85 C 4217R	(E)	67 lbs.	5	5	89.95
	85 C 4279R	(A) Manual	68 lbs.	5	6	114.95
	85 C 4289R	(A) Automatic	69 lbs.	5	7	139.95
	85 C 4280R	(B)	69 lbs.	5	8	159.95
	85 C 4228R	(C)	69 lbs.	5	10	194.95

EXHIBIT S-452

5-452

and more with a Kenmore Sewing Machine

Pleating · Attaching lace · Attaching braid · Attaching zippers · Quilting · Cording · Darning

Do all this quickly, professionally, easily at no extra cost!

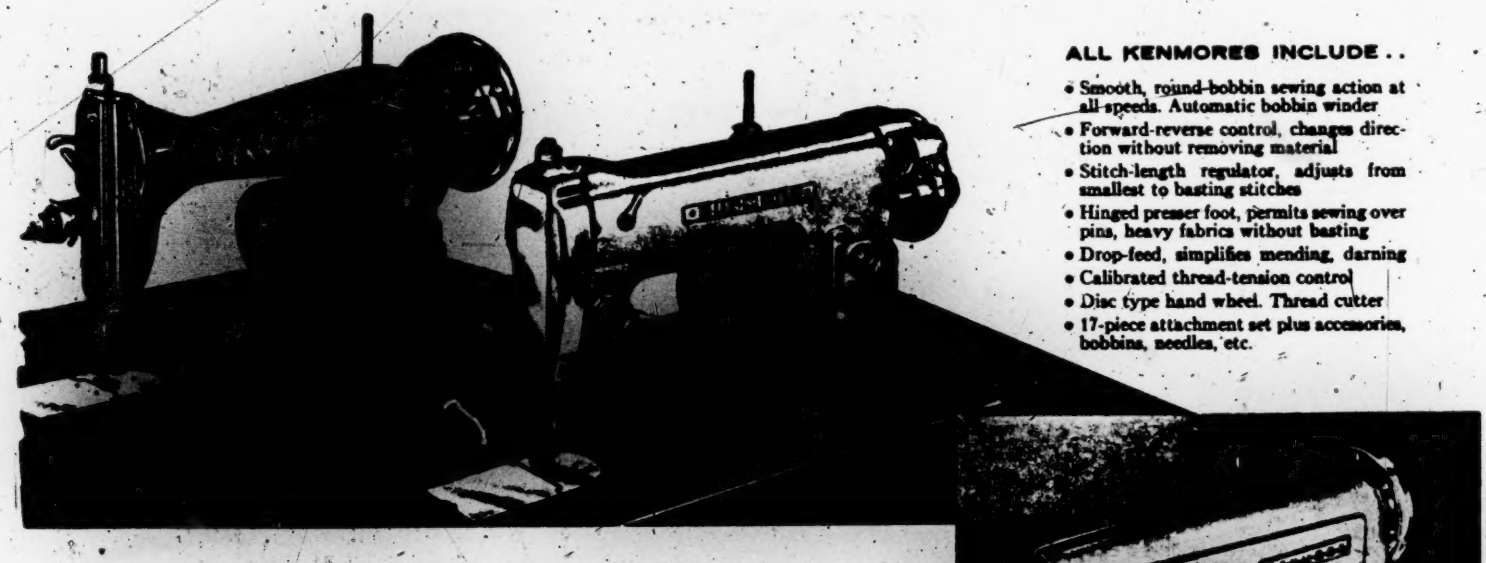

ALL KENMORES INCLUDE . .

- Smooth, round-bobbin sewing action at all speeds. Automatic bobbin winder
- Forward-reverse control, changes direction without removing material
- Stitch-length regulator, adjusts from smallest to basting stitches
- Hinged presser foot, permits sewing over pins, heavy fabrics without basting
- Drop-feed, simplifies mending, darning
- Calibrated thread-tension control
- Disc type hand wheel. Thread cutter
- 17-piece attachment set plus accessories, bobbins, needles, etc.

Kenmore Straight-stitch Sewing Machines

Head with Wood Base **$39.95** Low as $4.00 down

Head with Carrying Case **$67.50** Only $5 down

Model A. Don't do without a sewing machine when you can get one backed and guaranteed by Sears at so low a price. So easy to use, even a beginner can sew, darn and do backtacking after just a few minutes practice. Sews a strong double lockstitch both forward and reverse. Includes features described above at right. Black enamel finish with chrome-plated trim. *$5 monthly on Sears Special Easy Terms for appliances.*

20 K 2001K2—Sewing Head with fabric-covered Wood Base. Shpg. wt. 39 lbs. $39.95

20 K 2002L2—Sewing Head with Carrying Case and attachable light. Shpg. wt. 45 lbs. $49.95

20 K 2700N2—Sewing Head with Cabinet 1 (see page 863). *State blonde or mahogany finish.* Shipping weight 66 pounds $69.95

20 K 2703N2—Sewing Head with Cabinet 2 (see page 863). *State blonde or mahogany finish.* Shipping weight 86 pounds $99.95

Model B. Features link thread take-up for greater smoothness and speed of operation. Modern styling. Includes all features described above at right plus built-in light, 2 spool pins (1 retractable for winding bobbin without unthreading machine) and seam guide. Blue enamel finish with chrome-plated trim. *Low as $5 per month.*

20 K 2005L2—Sewing Head with Carrying Case. Shipping weight 51 pounds $67.50

20 K 2710N2—Head with Cabinet 1 (page 863). *State blonde or mahogany finish.* Wt. 75 lbs. $87.50

20 K 2720N2—Head with Cabinet 2 (page 863). *State blonde or mahogany finish.* Wt. 84 lbs. $117.50

20 K 2800N2—Sewing Head with Cabinet 3 (page 863). *State mahogany, walnut, limed oak or fruitwood (lt. brown) veneer.* Shpg. wt. 84 lbs. $117.50

20 K 2810N2—Sewing Head with Cabinet 4 (page 863). *State mahogany, walnut, limed oak or fruitwood (lt. brown) veneer.* Shpg. wt. 121 lbs. $172.50

Zig-zag plus Straight-stitching

Head with Carrying Case **$84.95** Only $5 dn.

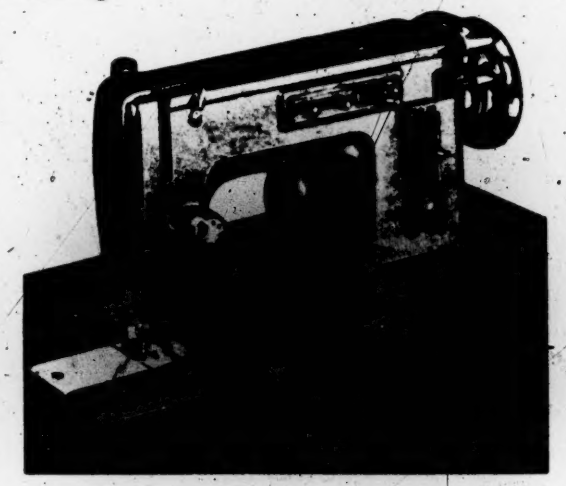

Model C. Will sew an almost unlimited variety of beautiful decorative stitches as well as straight-stitching. Hand lever swings needle, stitch regulator varies the patterns. You're limited only by the amount you practice and the skill you wish to acquire.

Sews lace edges, monograms and applique stitches and does backtacking, too. Even sews on buttons. Includes features described at upper right-hand corner of page. Blue enamel finish with chrome-plated trim. *Low as $5 per month.*

20 K 2006L2—Head with Carrying Case. Shpg. wt. 52 lbs. $84.95

20 K 2701N2—Head with Cabinet 1 (see page 863). *State blonde or mahogany finish.* Shpg. wt. 74 lbs. $104.95

20 K 2704N2—Head with Cabinet 2 (see page 863). *State blonde or mahogany finish.* Shpg. wt. 93 lbs. $134.95

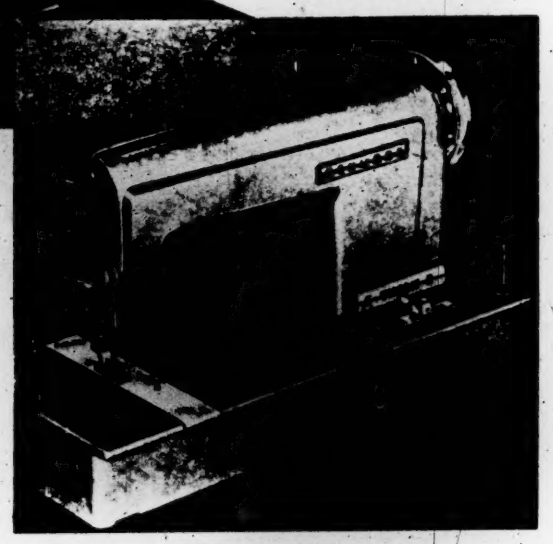

Light, sturdy aluminum, weighs only 17½ pounds!

$119.95 Only $5 down

Model J. Lightweight for carrying ease, rugged cast aluminum for durability. Full rotary jam-proof shuttle for smoothest, uninterrupted sewing action, forward or reverse.

Includes all features at top of page *plus:* built-in carbon pile knee control (permits sewing at any speed), simplified one-hand threading, calibrated seam guide, lever-controlled bobbin winder, large hand hole opening for easy bobbin access, stitch length selector, built-in motor, built-in light, enclosed base. Bronze and desert sand enameled finish. Cocoa tan plastic coated carrying case. Made in U.S.A. *Only $6 monthly on Easy Terms*

20 K 2009L2—Shipping weight 30 pounds $119.95

SPECIAL NOTE

All KENMORE sewing machines are imported from Japan unless otherwise stated. All are for 110-120-volt, 60-cycle AC or DC, and include instruction manual. All cabinet models are shipped partially assembled via freight (rail or truck) or express.

1574

[fols. 5625-5647] EXHIBIT S-453

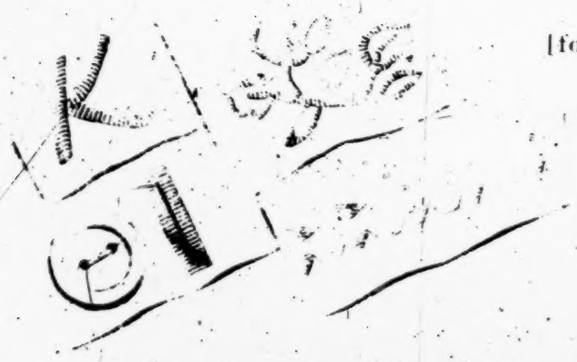

Fashion details at your fingertips

Kenmore Automatic Zig-zag Sewing Machines

Sears has a full selection of the finest American-made and fine imported sewing machines

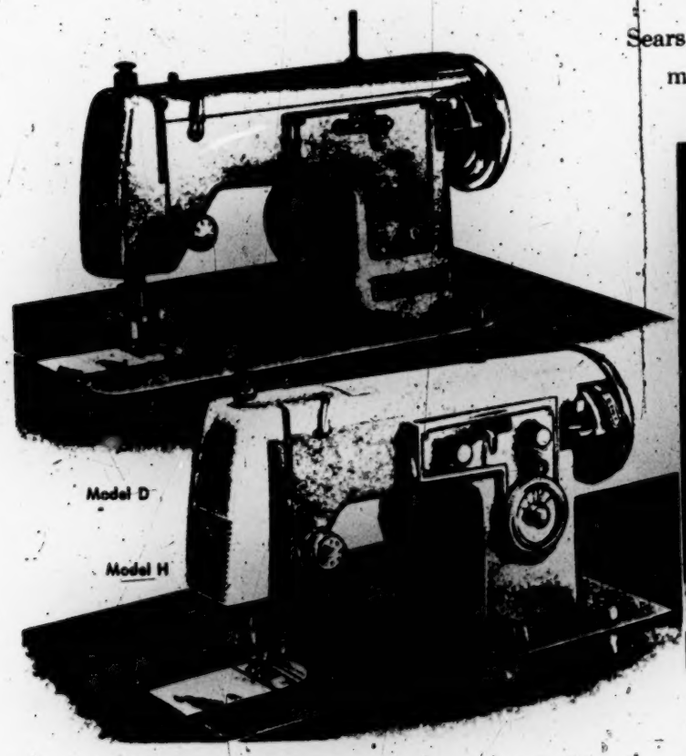

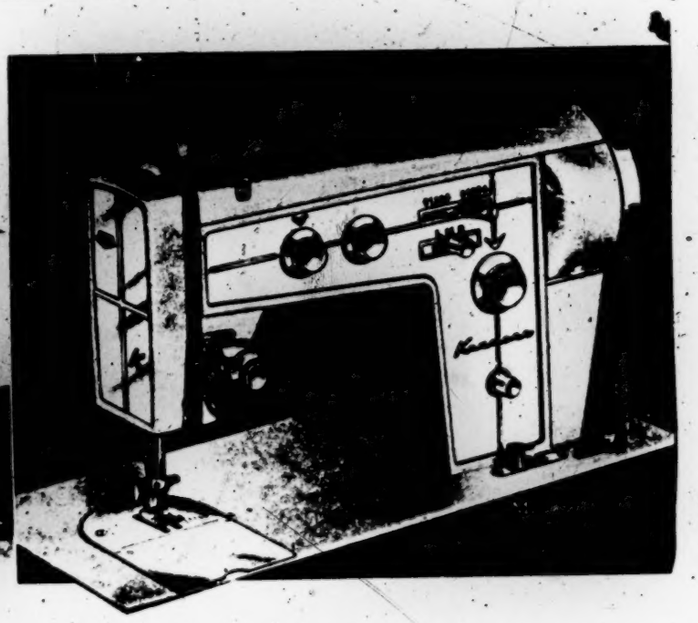

8 discs produce variety of decorative stitches

Head with Carrying Case **$109.95** Only $5 down

Model D. If you can thread a needle, you can do beautiful decorative stitching with this precision Kenmore automatic zig zag machine. All you do is slip in one of the discs and guide the fabric. You can also do appliques, monograms, scallops, blind hems, sew on buttons or make buttonholes, darn, mend, overcast raw seams or do superb straight stitching.

Includes all features described at top of preceding page plus: stitch width regulator (allows for many variations of basic pattern); calibrated seam guide in needle plate for easy measuring of hems etc.; concealed built-in light. Green enamel finish, chrome plated trim. *Low as $6 monthly on Sears Special Easy Terms.*

20 K 2007L2—Sewing Head with Carrying Case. Shipping weight 56 pounds $109.95

20 K 2702N2—Sewing Head with Cabinet 1 (opposite page). *State blonde or mahogany finish.* Shipping weight 79 pounds $129.95

20 K 2705N2—Sewing Head with Cabinet 2 (opposite page). *State blonde or mahogany finish.* Shipping weight 100 pounds $159.95

16 discs, plus handy push-button control

Head with Carrying Case **$129.95** Low as $5 down

Model H. Twice as many discs as model at left give you twice as many basic stitches and you can vary each by simply dialing a different length and width (64 variations shown in guide booklet and that's only the beginning). Has all features of model at left plus push-button reverse, dial-type stitch length control, locking stitch-width control. Deep coral and beige finish, chrome-plated trim.

20 K 2008L2—Sewing Head with Carrying Case. Shipping weight 53 pounds $129.95

20 K 2713N2—Sewing Head with Cabinet 1 (opposite page). *State blonde or mahogany finish.* Shipping weight 75 pounds $149.95

20 K 2719N2—Sewing Head with Cabinet 2 (opposite page). *State blonde or mahogany finish.* Shipping weight 92 pounds $179.95

20 K 2809N2—Sewing Head with Cabinet 3 (opposite page). *State walnut, mahogany limed oak, fruitwood veneer.* Shpg. wt. 87 lbs. $179.95

20 K 2813N2—Sewing Head with Cabinet 4 (opposite page). *State walnut, mahogany, limed oak, fruitwood veneer.* Shpg. wt. 126 lbs. $234.95

30 discs, plus stitch expander, 3-position single and double-needle

Head with Carrying Case **$189.95** Low as $5 down

Model F. An almost infinite number of stitches in one or two colors! 30 basic stitches can be varied by (1) Setting the 3-position needle to center the design or swing it to right or left (2) Sewing twin needle patterns in one or two colors (3) Doubling size of pattern with the stitch expander (stitch does not thin out). Switches quickly to straight stitching, too. Includes built-in motor; concealed bobbin winder; adjustable drive belt tension control, calibrated foot tension control and darning release (for materials of varying thicknesses); drop feed control. Driftwood and desert beige finish with chrome plated trim.

20 K 2012L2—Sewing Head with Carrying Case. Shipping weight 60 pounds $189.95

20 K 2716N2—Sewing Head with Cabinet 1 (opposite page). *State blonde or mahogany finish.* Shpg. wt. 83 lbs. $209.95

20 K 2726N2—Sewing Head with Cabinet 2 (opposite page). *State blonde or mahogany finish.* Shpg. wt. 102 lbs. $239.95

20 K 2806N2—Sewing Head with Cabinet 3 (opposite page). *State walnut, mahogany, limed oak or fruitwood (light brown) veneer.* Shipping weight 96 pounds $239.95

20 K 2816N2—Sewing Head with Cabinet 4 (opposite page). *State walnut, mahogany, limed oak or fruitwood (light brown) veneer.* Shipping weight 132 pounds $294.95

FREE! Ask at your Catalog Sales Office or send a postcard for our folder with some of the many beautiful stitches you can sew with a KENMORE zig-zag machine. Write Sears, Dept. 139. Ask for folder 6722K.

SPECIAL NOTE. All KENMORE Machines on these two pages include all of the features and attachments described at the top of the preceding page: All are for 110-120 volt, 60 cycle AC or DC and are imported from Japan unless otherwise stated.

SHIPPING NOTE: All cabinet sewing machines shipped partially assembled by freight (rail or truck) or express from mail order house

1575

[fols. 5579-5580] IN UNITED STATES DISTRICT COURT

DEFENDANT'S EXHIBIT 170

Annual Report for the Year Ending December 31, 1957

. . . . . .

[fols. 5581-5598] White Sewing Machine Corporation
Cleveland 11, Ohio

Since 1876

March 28, 1958

To the Stockholders of White Sewing Machine Corporation:

. . . . . .

Both White and Sears, Roebuck and Company had been fighting a side by side but losing battle over the past five or six years in trying to sell White's lines of fine, though necessarily more costly, U.S.A.-made sewing machines in competition with foreign-built imports. When Sears left our side to pursue the import route, it was obvious that White had no chance of supporting its sewing machine manufacturing facilities on a volume suddenly reduced nearly in half. In this situation, management decided to have our line of sewing machines built for us in Japan and Germany, and to dispose of our principal sewing machine manufacturing facilities. This decision was based upon the conviction that it offered the most logical and quickest route to profitable operations and increased sales in the sewing machine division.

. . . . . .

EXHIBIT S-474

S-474

SEW EASIER, SEW BETTER WITH Vogue Stitch

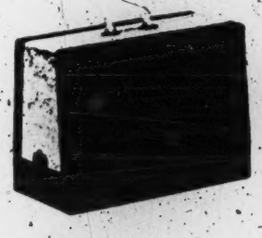

Portable Models with Case

Each of the 5 fine quality sewing machines on these pages comes complete with its own easy-to-carry, dustproof luggage case.
Leather-like covers—washable, scuff-resistant. Cases are easy to care for, stay new looking . . . help protect your new sewing machine from dust, dirt, mars.
Cases match sewing machine finish—perfect companion for the machine of your choice. All have sturdy handles, snap locks.

Veneered, Hand Polished Console Models

Combine sewing machines A thru D with any of the 3 handsome cabinets shown below. The cost is small, and you have a fine cabinet of lasting beauty—one which will serve as a handsome lamp table—one which will stand proudly beside your nicest furniture.
Each cabinet is carefully crafted of select 5-ply veneered hardwood . . . hand rubbed and polished to a lustrous finish. Choose from Modern, Traditional or Scandinavian influenced styles . . . in choice of finish to blend beautifully with your decorating scheme.

Complete Parts and Service

Parts list included with every sewing machine on these pages. Repair parts are always available . . . see page 646 for "How to Order" information. For additional information or service write "Spiegel, Inc., Department 156." You will receive prompt, courteous service. All sewing machines guaranteed (see right).
Also included with every sewing machine: informative, generous, illustrated booklet with many tips to help you sew easier, better.

Portable
with case
54.95
or $5 monthly

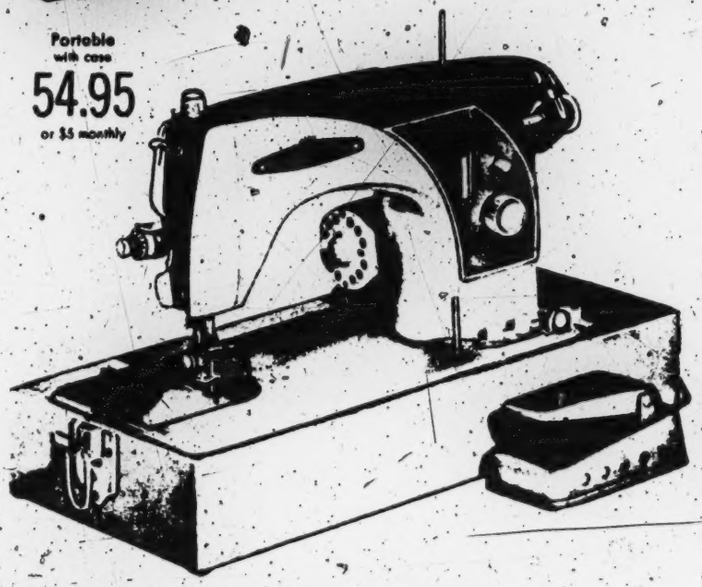

Portable
with case
79.95
or $5 monthly

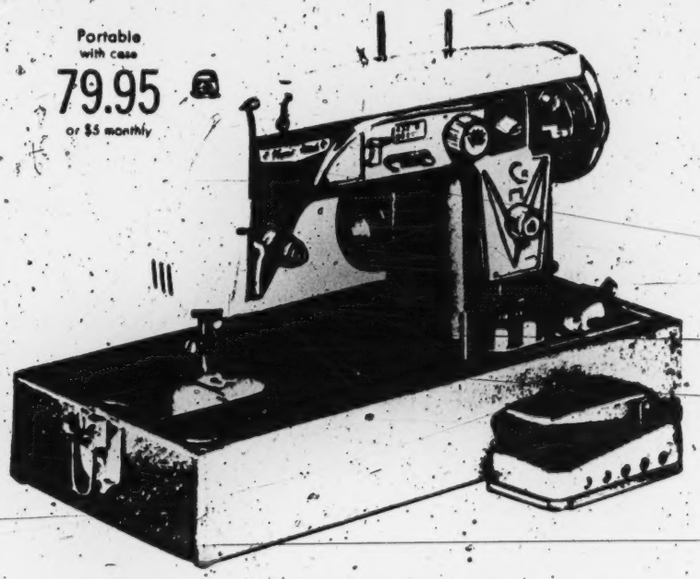

Vogue Stitch Full Size Head Sewing Machine—Low Cost

A

- Save $12.00—same quality sells to $66.95 elsewhere
- Push a button for drop feed, forward or reverse sewing
- Built-in sewing light, 14-piece accessory set included

Streamlined round bobbin Vogue Stitch sewing machine gives you fine quality performance, yet the price is extremely low!
Sews a tight, uniform double lockstitch, has stitch length and thread tension regulators. Hinged presser foot floats over pins and seams—no basting! Bobbin winder trips off automatically when bobbin is full. Attachments adapt machine for many tasks.
Air cooled universal motor powers smooth running bobbin mechanism. Cast iron head finished in baked enamel with chrome plated fittings. Cast iron and steel working parts.
Needles, bobbin available. Information packed booklet included.

Portable with Machine (A) in matching leather-like case. Variable speed foot control included. 18x10x14 in. high.
H78 X 2722W. Mailable. (51 lbs.) . . . **54.95**

Economy Portable. Model (A) Machine as pictured above without case top, attachment set. Foot control included.
H78 X 2725W. Mailable. (50 lbs.) 48.95

Console with Machine (A). Sold in three cabinet styles below and on facing page.

Vogue Stitch Push Button Zig Zag Sewing Machine

B

- Save $16.00—same quality machine costs $95.95 elsewhere
- Built-in blind stitch cam lets you cuff, hem so easily
- Pushbutton forward reverse, drop feed—automatic bobbin

Better sewing, better savings in this wonderful new 1960 model! More features than ever before—automatic pushbutton lets you switch instantly between forward and reverse; push-button drop feed lets you mend and darn quickly and easily. Built-in blind stitch cam gives you hidden stitches.
Sew professionally without attachments. Sew buttons, buttonholes, monograms, tucks, pipes, patches, appliques do a wide variety of zig zag and fancy stitches. Accurate thread tension, stitch adjustment controls—sew straight and true every time. Hinged pressure foot lets you stitch over pins, thick seams, double thicknesses. Shuttle case, removes for easy thread clearing.
Handsomely enameled cast iron head has chrome plated controls and fittings. Light over sewing area. Sewing booklet included.

Portable with Machine (B) in matching leather-like case. Variable speed foot control included. 18x9x13 in. high.
H78 X 2794W. Mailable. (45 lbs.) . . . **79.95**

Console with Machine (B). Sold in three cabinet styles below, and on facing page.

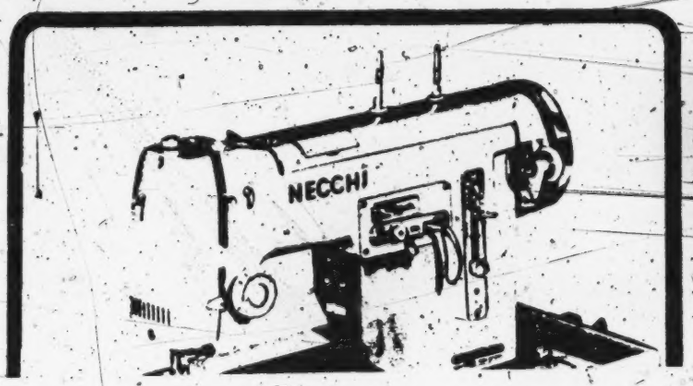

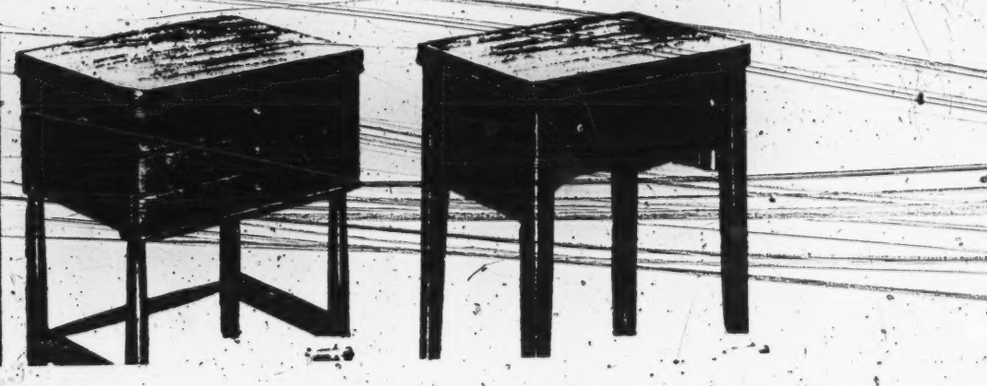

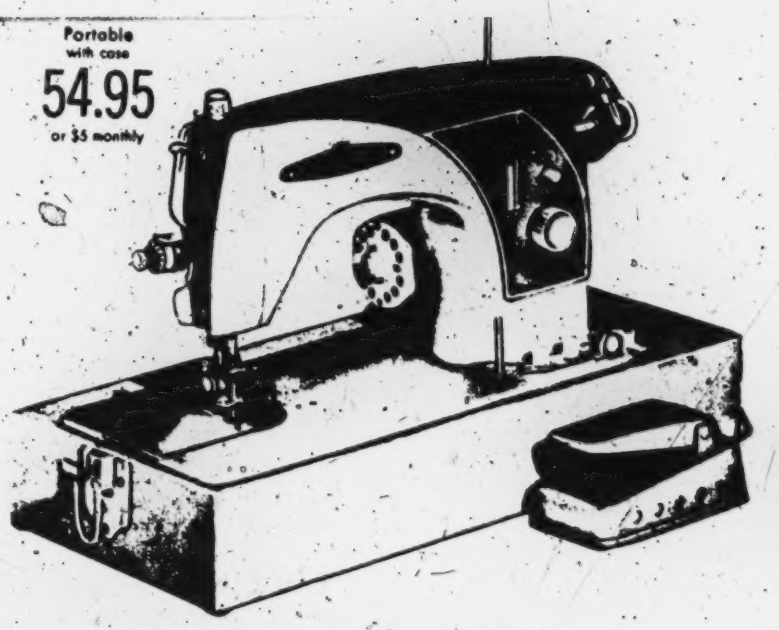

Portable with case
54.95
or $5 monthly

Vogue Stitch Full Size Head Sewing Machine—Low Cost

A

- Save $12.00—same quality sells to $66.95 elsewhere
- Push a button for drop feed, forward or reverse sewing
- Built-in sewing light, 14-piece accessory set included

Streamlined round bobbin Vogue Stitch sewing machine gives you fine quality performance, yet the price is extremely low!
Sews a tight, uniform double lockstitch, has stitch length and thread tension regulators. Hinged presser foot floats over pins and seams—no basting! Bobbin winder trips off automatically when bobbin is full. Attachments adapt machine for many tasks.
Air cooled universal motor powers smooth running bobbin mechanism. Cast iron head finished in baked enamel with chrome plated fittings. Cast iron and steel working parts. Needles, bobbin available. Information packed booklet included.

Portable with Machine (A) in matching leather-like case. Variable speed foot control included. 18x10x14 in. high.
H78 X 2722W. Mailable. (51 lbs.) . . . 54.95

Economy Portable. Model (A) Machine as pictured above without case top, attachment set. Foot control included.
H78 X 2725W. Mailable. (50 lbs.) 48.95

Console with Machine (A). Sold in three cabinet styles below and on facing page.

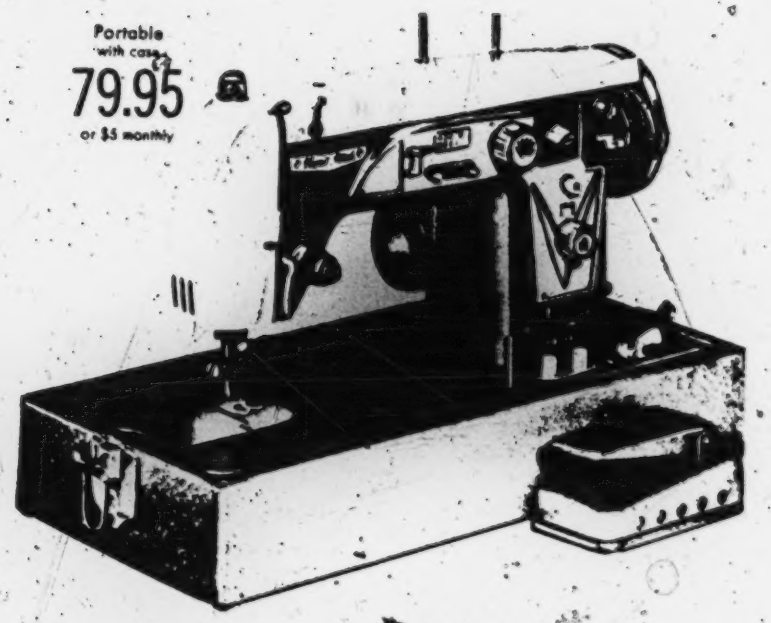

Portable with case
79.95
or $5 monthly

Vogue Stitch Push Button Zig Zag Sewing Machine

B

- Save $16.00—same quality machine costs $95.95 elsewhere
- Built-in blind stitch cam lets you cuff, hem so easily
- Pushbutton forward, reverse, drop feed—automatic bobbin

Better sewing, better savings on this wonderful new 1960 model! More features than ever before—automatic pushbutton lets you switch instantly between forward and reverse; push-button drop feed lets you mend and darn quickly and easily. Built-in blind stitch cam gives you hidden stitches.
Sew professionally without attachments. Sew buttons, buttonholes, monograms, tucks, pipes, patches, appliques, do a wide variety of zig zag and fancy stitches. Accurate thread tension, stitch adjustment controls—sew straight and true every time. Hinged pressure foot lets you stitch over pins, thick seams, double thicknesses. Shuttle case removes for easy thread clearing.
Handsomely enameled cast iron head has chrome plated controls and fittings. Light over sewing area. Sewing booklet included.

Portable with Machine (B) in matching leather-like case. Variable speed foot control included. 18x9x13 in. high.
H78 X 2794W. Mailable. (45 lbs.) . . . 79.95

Console with Machine (B). Sold in three cabinet styles below, and on facing page

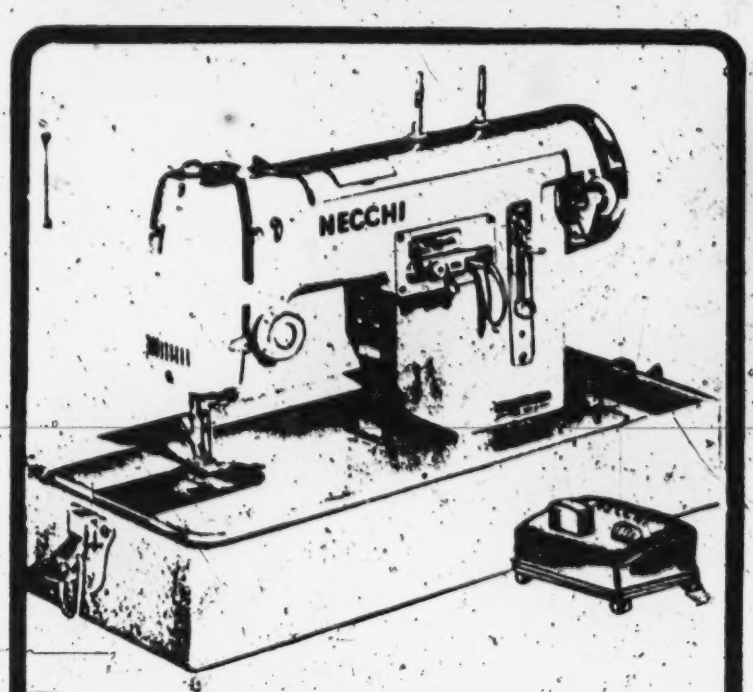

Necchi Twin Needle Automatic Zig Zag Machine

With Case
249.50
or $13 monthly

- 12 cams—sew hundreds of designs, automatically
- 3-color special-effect sewing . . . 3 needle positions
- Automatic needle threader . . . dial controls
- Adjust stitches for best results on any type fabric

The famous Necchi sewing machine from Italy—prized the world over for excellence, advanced design.
Twin needle, 3 color sewing for special decorating effects. Sew with 1, 2 or 3 thread colors. Use either 1 or 2 needles for all sewing jobs. 3 needle positions permit design to be centered or shifted to right or left—without stopping machine.
Simple controls let you sew monograms, embroidery, appliques, hemstitching, piping, button holes, buttons—hundreds of designs. Sews a tight double lockstitch forward or reverse at any speed. Hinged presser foot floats over pins—no basting! Stitch length and thread tension regulators let you adjust stitches for best results on any type of fabric.
Automatic bobbin winder; drop feed for darning or mending. Sewing light. Baked-on enameled cast iron head; bright plated fittings. Matching leather-like luggage case—washable, scuff-resistant. Informative sewing booklet included. Mailable.
H78 X 3662W. (53 lbs.) 249.50

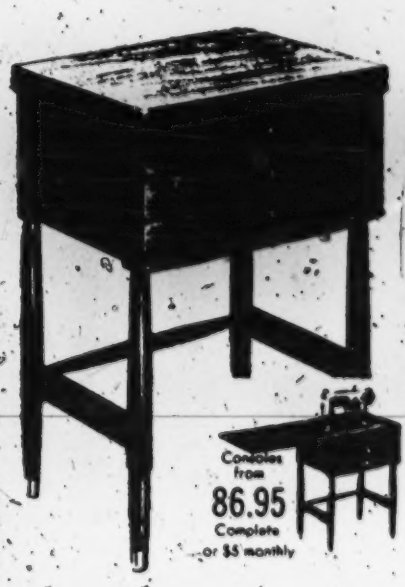

Consoles from
86.95
Complete
or $5 monthly

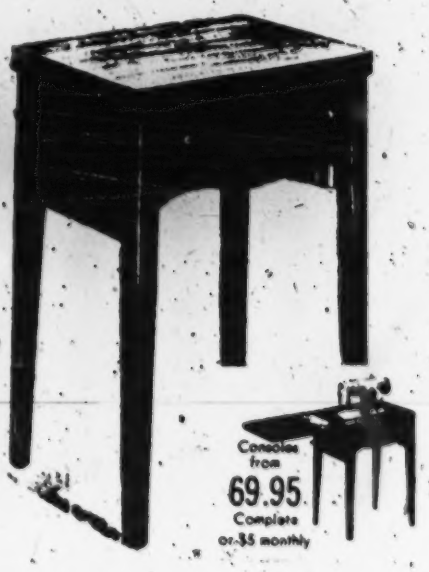

Consoles from
69.95
Complete
or $5 monthly

Vogue Stitch Console Styled Sewing Machines—With Your Choice

SCANDIA MODERN CONSOLE . . . transitional styling reflects the popular Scandinavian influence . . . blends beautifully with all furniture.
Select 5 ply veneer on hardwood, polished and finished with 3 coats of lacquer, hand rubbed to a lasting lustre. Tapered hardwood legs. Built-in variable speed knee control. 18x23x31 in. high, top opens to convenient 45-in. workspace.
Easy to assemble. See descriptions of machines above, and facing page. Walnut, Mahogany or Limed Oak finish. State finish. Freight. (80 lbs.)

Console with Sewing Machine (A).
B78 X 2782W. $104.95 elsewhere 86.95

With Sewing Machine (B).
B78 X 2771W. $139.95 elsewhere 116.95

With Sewing Machine (C).
B78 X 2772W. $169.95 elsewhere 134.95

With Sewing Machine (D).
B78 X 2779W. $219.95 elsewhere 179.50

TRADITIONAL CONSOLE . . . same fine construction as found in more expensive models, yet priced to save you most. Ideal as extra table.
Built for lasting beauty. 5 ply veneered hardwood with lustrous 3-coat lacquer finish . . . carefully hand rubbed and polished to stand proudly beside your nicest furniture. Built-in variable speed knee control. 22x17x31 in. high; opens to 43 in. work space. Easy to assemble. See descriptions of sewing machines above and far right. Choice of Walnut or Mahogany finish. State finish. Freight. (78 lbs.)

With Sewing Machine (A).
B78 X 2791W. $84.95 elsewhere 69.95

With Sewing Machine (B).
B78 X 2795W. $120.95 elsewhere 99.95

With Sewing Machine (C).
B78 X 2762W. $142.95 elsewhere 119.95

With Sewing Machine (D).
B78 X 2777W. $192.95 elsewhere 159.50

Wonderful new improvements in Sewing Machines have made them better than ever! Order your new 1960 Model—on Budget Power.

EXHIBIT S-486

ONLY $3 DOWN BUYS SEWING MACHINE

ZIG-ZAGS
Does All These Better, Faster!

Monograms Beautifully, Personalizes Dresses.

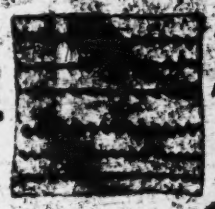

Zig-Zags Makes Many Intricate Designs

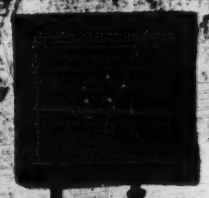

Appliques Lovely Flowers, Contrasting Trims . . . So Individual

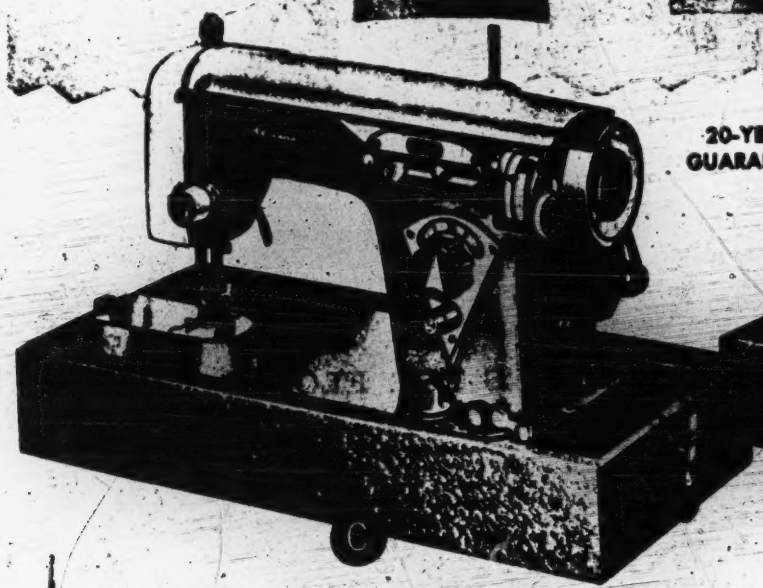

20-YEAR GUARANTEE

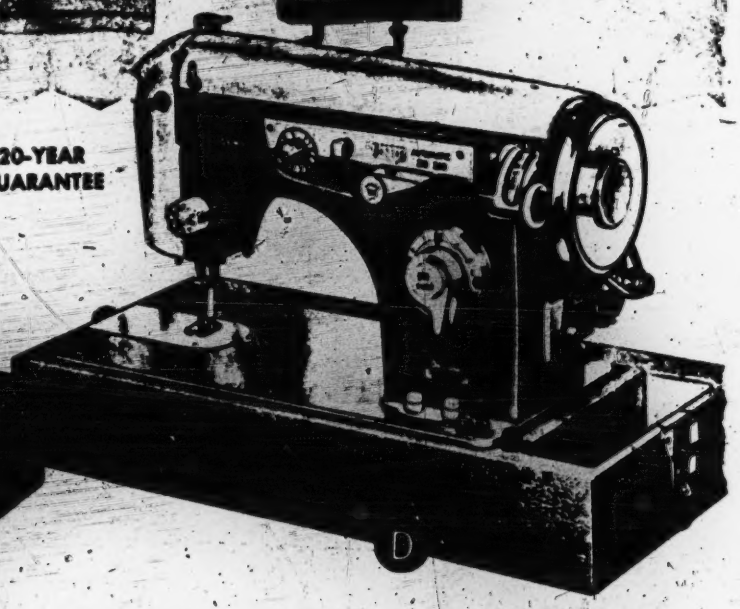

Semi-Automatic Zig-Zag Push-Button Reverse 79.95 3.00 Down

A new way to create beauty is open to you with this energetic semi-automatic 1-position zig-zag portable sewing machine. You'll be amazed at the sewing tasks it performs—in addition to straight sewing it will monogram, embroider, darn, sew on buttons, and make buttonholes. All you do is guide the lever—the machine does the rest in a really professional style! Other features include a push-button forward and reverse, automatic bobbin wind, pressure regulator, drop feed dial tension and sewing light; plus accessories and instructions. Machine is Blue enamel, with 2-tone carrying case. Guaranteed for 20 years. 110-120 volt, AC-DC. 41 N 4663R—Shipped freight or express. Shipping weight 53 lb.....79.95

Fully Automatic Zig-Zag 14 Built-in-Designers Discs 99.95 3.00 Down

No sewing task is too difficult for this fully automatic 1 position zig-zag portable sewing machine—you simply choose from 14 built-in discs to make beautiful designs—make buttonholes or sew on buttons! Do beautiful straight sewing, too! You save $40, for comparable machines sell for 139.95 elsewhere. You don't have to be a mechanic to operate it, either—sews as easily automatically as an ordinary machine straight sews. Push button reverse; built-in needle light for shadowless sewing—conveniences which assure you relaxed comfort after hours of sewing. Comes with instructions and 20 year guarantee in a 2-tone carrying case. 110V, AC-DC. 41 N 4633R—Shipped freight or express. Shipping weight 54 lb.....99.95

Straight Sew Round Bobbin Machines

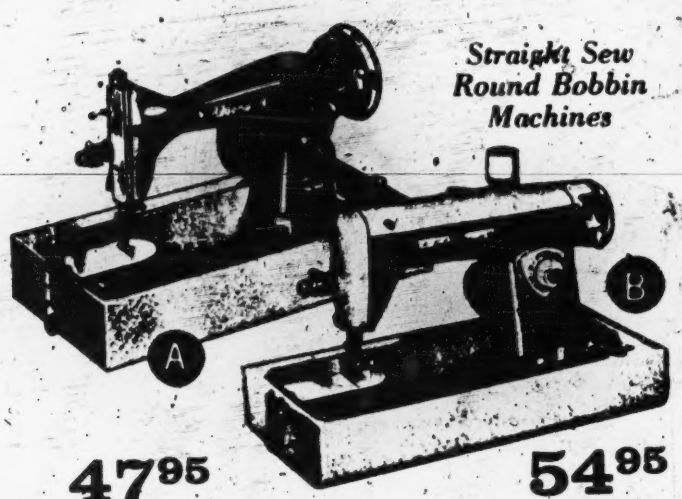

47.95

ECONOMY ROUND BOBBIN Portable has forward and reverse lever, automatic darner, bobbin winder, adjustable stitch regulator. Hinged presser foot and 7-speed foot control. Black enamel with chrome trim; 2-tone case, 20 year guarantee. 110-120 Volt, AC-DC. Shipped Frt./Exp. 41 N 4621R—Wt. 44 lb. 47.95

722-ALDENS

54.95

DELUXE ROUND BOBBIN Portable has push-button reverse for bartacking, built-in thread tension, automatic bobbin winder, light, stitch regulator, presser foot and 7-speed foot control. Comes with 2-tone case, instructions, and 20 year guarantee. Modern machine, old-fashioned price. 110V, AC-DC. Frt./Exp. 41 N 4638R—Wt. 46 lb.....54.95

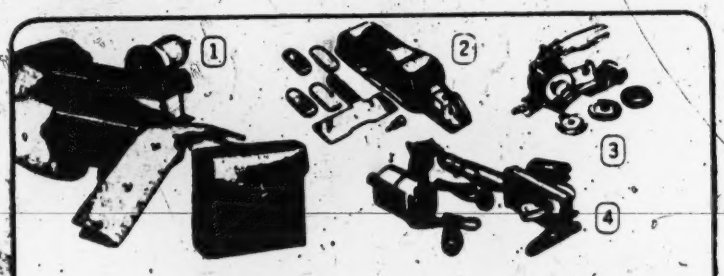

Sewing Accessories For Every Need

1 **HAND SEWING MACHINE.** Sews buttons, bastes, hems, mends automatically by depressing bar. Use for small jobs. Book of hints, carrying case included. 41 N 4584—Mail. Wt. 9 oz.....3.79

2 **GRIEST BUTTONHOLER** with 4 templates. Fits all Aldens Round Bobbin or Long Shuttle machines. Handy accessory. Mail. 41 N 4616—Wt. 1 lb. 9 oz.....8.99

3 **ZIG-ZAG and FANCY STITCH ATTACHMENT** has 3 zig-zag discs, 1 template. Fits all round bobbin machines except White, Free, Westinghouse. 6.95 value. 41 N 4457—Ship. wt. 6 oz....4.95

4 **TREADLE CONVERSION KIT** will convert all treadle machines to electric. Self-oiling AC-DC motor, hardware, and controls included. 110-120 volts. Mailable. 41 N 4666—Wt. 5 lb. 5 oz....14.95

Following Supplies Not Shown.
GRIEST ATTACHMENT SET.— 18 pieces, with sewing light. Mail. 41 N 4612—Wt. 1 lb. 7 oz.....4.99
SEWING LIGHT fits any machine. Clamps on. Tubular bulb; cord. 41 N 4649—Mail. Wt. 8 oz.....1.49
RUBBER Belt for electric machines. 41 N 4665—Mail. 3 oz...3 for 49c
Round Bobbins for U.S. machines. 41 N 4622—Mail. 2 oz. 3 for 39c
ROUND BOBBINS for Singer No. 15 machine and Aldens imports. 41 N 4614—Mail. 2 oz. 6 for 49c
LONG BOBBINS for Singer No. 15 machine and Aldens imports. 41 N 4623—Mail. 2 oz. 3 for 25c
NEEDLES for American machines only. Mailable. Handy extras! 41 N 4619—Wt. 2 oz.....12 for 99c
NEEDLES for Singer No. 15 machine and Aldens import machines. 41 N 4609—Mail. 2 oz. 25 for 99c

5658
5674

1577

[fol. 5675] IN UNITED STATES DISTRICT COURT

DEFENDANT'S EXHIBIT 175

JAPANESE SEWING MACHINES IMPORTED INTO UNITED STATES

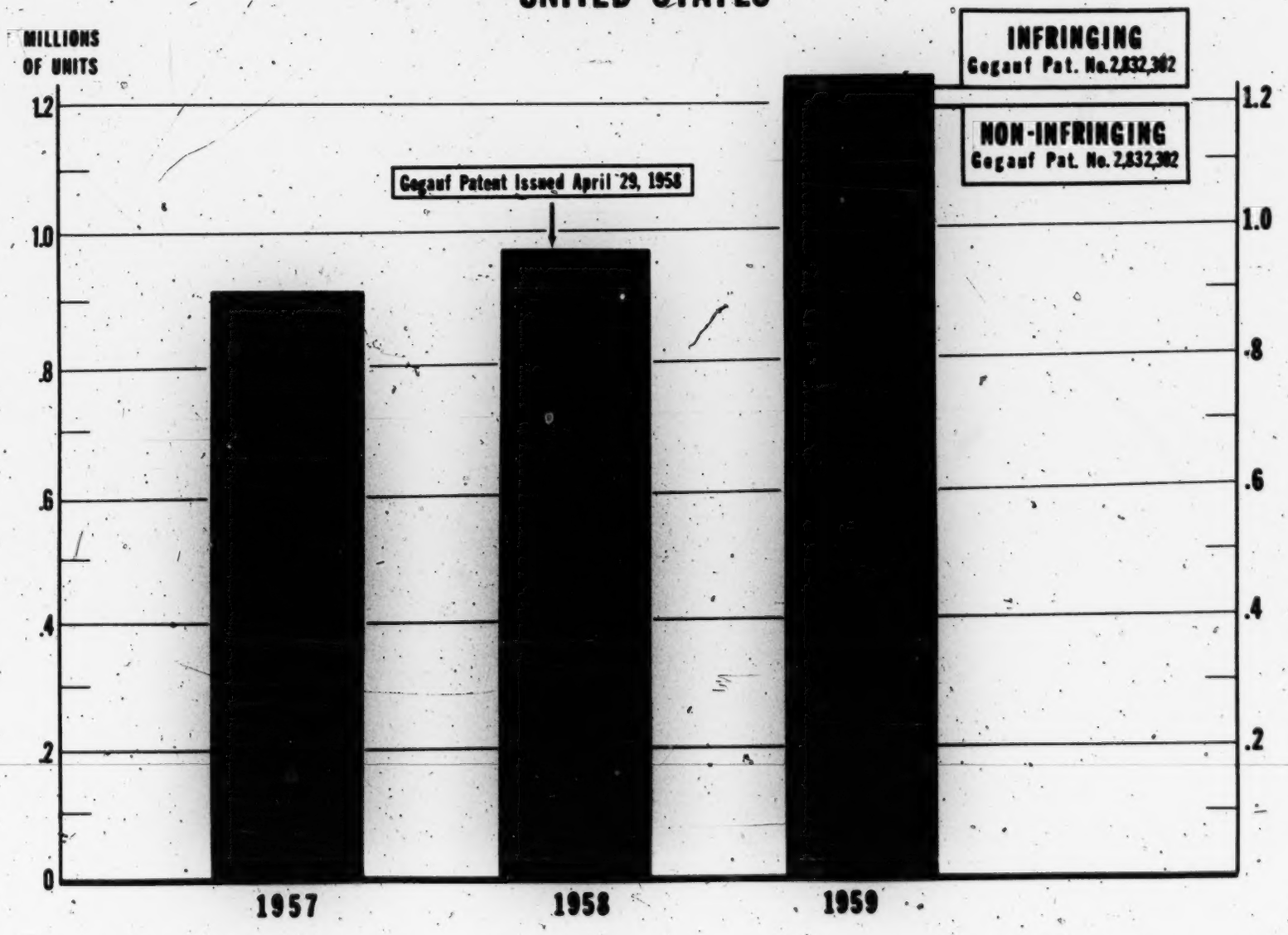

SOURCE: STIPULATION OF FACTS

[fols: 5745-5746]

IN UNITED STATES DISTRICT COURT

DEFENDANT'S EXHIBIT 185

U. S. Department of Commerce
Bureau of the Census
Washington 25, D. C.

United States Imports of Sewing Machines for Consumption
Calendar Years 1947 Through 1959

Commodity description and Period covered	United Kingdom Quantity (number)	United Kingdom Value (dollars)	West Germany[1] Quantity (number)	West Germany[1] Value (dollars)	Switzerland Quantity (number)	Switzerland Value (dollars)	Italy Quantity (number)	Italy Value (dollars)	Japan Quantity (number)	Japan Value (dollars)	All Others Quantity (number)	All Others Value (dollars)	Total Imports Quantity (number)	Total Imports Value (dollars)
Sewing Machines, Not Specifically Provided for, Including Heads:														
Valued Over $10 and Not Over $75 Each[2]:														
1947	949	56,775	.....	.....	1	75	.....	.....	.....	.....	160	5,092	1,110	61,942
1948	797	28,662	613	32,753	.....	.....	11,796	570,303	3,028	74,345	724	29,331	16,958	735,394
1949	96,647	4,151,568	4,866	253,521	351	22,485	5,682	347,624	15,980	411,155	4,704	275,947	128,230	5,462,300
1950	12,480	259,900	16,241	1,005,338	4,489	212,465	3,643	187,116	64,407	1,296,013	59,999	1,489,150	161,259	4,449,982
1951	2,915	111,795	36,118	2,095,201	5,041	295,888	49,562	2,954,950	312,581	5,662,469	37,253	1,090,900	443,470	12,211,203
1952	9,921	300,700	67,593	4,132,361	6,244	395,913	83,851	4,565,896	515,348	9,115,133	29,914	1,135,263	712,871	19,645,266
1953	46,539	1,500,429	62,528	3,698,926	7,819	563,644	84,252	5,089,409	439,570	8,179,094	30,949	1,253,882	671,657	20,285,384
1954	102,183	2,594,348	57,938	3,401,786	3,166	224,862	75,339	4,083,814	385,845	6,839,448	10,923	572,360	635,394	17,716,618
1955	138,215	2,387,220	56,372	3,265,272	10,736	756,18	71,995	4,069,455	652,274	12,206,630	8,107	494,788	937,699	23,179,552
1956	177,600	3,208,505	68,361	3,679,940	6,487	441,072	67,497	3,832,626	648,574	12,931,056	24,721	868,964	993,240	24,962,163
1957	108,415	2,060,128	60,764	3,410,902	10,138	741,052	57,371	3,143,645	843,576	18,376,144	13,002	665,691	1,093,266	28,397,562
1958	87,055	1,952,653	39,933	2,084,680	9,804	654,913	52,727	2,738,964	933,720	20,174,826	11,335	471,445	1,134,574	28,077,481
1959	192,656	3,955,593	43,734	2,747,788	11,571	776,618	47,141	2,314,407	1,092,928	25,468,472	9,837	536,382	1,397,867	35,799,260
Valued Over $75 Each[2]:														
1947	1,080	158,492	.....	.....	11	1,385	3	560	.....	.....	116	18,372	1,210	178,809
1948	875	138,621	100	8,725	1,010	77,572	28	5,179	1	90	1,003	112,963	3,017	343,150
1949	15,258	318,571	333	36,737	396	30,678	321	34,161	129	17,836	2,900	294,071	19,337	732,054
1950	600	84,673	1,544	157,111	2,455	213,711	105	9,168	2	301	293	39,128	4,999	504,092
1951	936	115,640	8,234	737,354	728	64,864	271	23,712	1,390	33,576	497	60,372	12,056	1,035,518
1952	9,223	171,987	8,319	699,129	1,714	150,777	1,604	101,952	316	6,843	2,676	275,879	23,852	1,406,567
1953	392	60,920	1,836	216,189	21,486	1,901,357	2,189	169,573	800	13,100	2,630	278,952	29,333	2,640,091
1954	377	42,142	9,957	963,487	20,655	1,761,822	7,644	578,079	375	43,290	3,295	303,688	42,303	3,692,418
1955	400	43,692	21,991	1,944,868	26,252	2,064,720	4,254	321,235	6	510	4,613	409,351	57,516	4,784,376
1956	912	98,120	30,518	2,792,422	17,972	1,444,230	128	11,183	691	61,472	4,935	411,311	55,156	4,818,738
1957	825	107,569	15,757	1,522,519	7,752	621,496	2,306	190,480	1,462	134,748	4,159	355,281	32,261	2,932,093
1958	127	18,589	11,987	1,217,781	6,659	564,310	484	55,293	541	46,806	3,449	343,795	23,247	2,246,574
1959	242	67,324	10,267	1,094,355	4,949	420,282	1,897	204,557	143	22,188	3,654	294,111	21,152	2,102,817
Total Imports Over $10[3]:														
1947	2,029	215,267	.....	.....	12	1,460	3	560	.....	.....	276	23,464	2,320	240,751
1948	1,672	167,283	713	41,478	1,010	77,572	11,824	575,482	3,029	74,435	1,727	142,294	19,975	1,678,544
1949	111,905	4,470,139	5,199	290,258	747	53,163	6,003	381,785	16,109	428,991	7,604	570,018	147,567	6,194,354
1950	13,080	344,573	17,785	1,162,449	6,944	426,176	3,748	196,284	64,409	1,296,314	60,292	1,528,278	166,258	4,954,074
1951	3,851	227,435	44,352	2,832,555	5,769	360,752	49,833	2,978,662	313,971	5,696,045	37,750	1,151,272	455,526	13,246,721
1952	19,144	472,687	75,912	4,831,490	7,958	546,690	85,455	4,667,848	515,664	9,121,976	32,590	1,411,142	736,723	21,051,833
1953	46,931	1,561,349	64,364	3,915,115	29,305	2,465,001	86,441	5,258,982	440,370	8,192,194	33,579	1,532,834	700,990	22,925,475
1954	102,560	2,636,490	67,895	4,365,273	23,821	1,986,694	82,983	4,661,893	386,220	6,882,738	14,218	876,048	677,697	21,409,136
1955	138,615	2,430,912	78,363	5,210,140	36,988	2,820,907	76,249	4,390,690	652,280	12,207,140	12,720	904,139	995,215	27,963,928
1956	178,512	3,306,625	98,879	6,472,362	24,459	1,885,302	67,625	3,834,809	649,265	12,992,528	29,656	1,280,275	1,048,390	29,780,901
1957	109,240	2,167,697	76,521	4,933,421	17,890	1,362,548	59,677	3,334,125	845,038	18,510,892	17,161	1,020,972	1,125,527	31,329,655
1958	87,182	1,971,242	51,920	3,302,461	16,463	1,219,223	53,211	2,794,257	934,261	20,221,632	14,784	815,240	1,157,821	30,324,055
1959	192,898	4,022,917	54,001	3,842,143	16,520	1,196,900	49,038	2,518,964	1,093,071	25,490,660	14,491	830,493	1,319,019	37,902,077

[1] Prior to January 1, 1952, East and West Germany were combined.
[2] 1947 through 1959 include imports of household and industrial type sewing machines reported as one combined total.
[3] Note.—The above data do not reflect revisions made after publication. Some of these are described in the attached issues of the *Foreign Trade Statistics Notes* for July 1950, May 1951 and May 1956.
Source: U. S. Department of Commerce, Bureau of the Census; 1947 through 1958, Report FT 110, statistical classification numbers 7550 300 and 7550 500, and 1959, Table IM 145, statistical classification numbers 7550 300 and 7550 500.

June 9, 1961

[fol. 5747]

IN UNITED STATES DISTRICT COURT

DEFENDANT'S EXHIBIT 186

U. S. Department of Commerce
Bureau of the Census
Washington 25, D. C.

United States Imports of Sewing Machines for Consumption
Calendar Years 1948 Through 1960

Commodity description and Period covered	United Kingdom Quantity (number)	United Kingdom Value (dollars)	West Germany[1] Quantity (number)	West Germany[1] Value (dollars)	Switzerland Quantity (number)	Switzerland Value (dollars)	Italy Quantity (number)	Italy Value (dollars)	Japan Quantity (number)	Japan Value (dollars)	All Others Quantity (number)	All Others Value (dollars)	Total Imports Quantity (number)	Total Imports Value (dollars)
Sewing Machines, Not Specially Provided for, Including Heads:														
Valued Over $10 and not Over $75 Each[2]:														
1948	797	28,662	613	32,753	.....	.....	11,796	570,303	3,028	74,345	724	29,331	16,958	735,394
1949	96,647	4,151,568	4,866	253,521	351	22,485	5,682	347,624	15,980	411,155	4,704	275,947	128,230	5,462,300
1950	12,480	259,900	16,241	1,005,338	4,489	212,465	3,643	187,116	64,407	1,296,013	59,999	1,489,150	161,259	4,449,982
1951	2,915	111,795	36,118	2,095,201	5,041	295,888	49,562	2,954,950	312,581	5,662,469	37,253	1,090,900	443,470	12,211,203
1952	9,921	300,700	67,593	4,132,361	6,244	395,913	83,851	4,565,896	515,348	9,115,133	29,914	1,135,263	712,871	19,645,266
1953	46,539	1,500,429	62,528	3,698,926	7,819	563,644	84,252	5,089,409	439,570	8,179,094	30,949	1,253,882	671,657	20,285,384
1954	102,183	2,594,348	57,938	3,401,786	3,166	224,862	75,339	4,083,814	385,845	6,839,448	10,923	573,360	635,394	17,716,618
1955	138,215	2,387,220	56,372	3,265,272	10,736	756,187	71,995	4,069,455	652,274	12,206,630	8,107	494,788	937,699	23,179,552
1956	177,600	3,208,505	68,361	3,679,940	6,487	441,072	67,497	3,832,626	648,574	12,931,056	24,721	868,964	993,240	24,962,163
1957	108,415	2,060,128	60,764	3,410,902	10,138	741,052	57,371	3,143,645	843,576	18,376,144	13,002	665,691	1,093,266	28,397,562
1958	87,055	1,952,653	39,933	2,084,680	9,804	654,913	52,727	2,738,964	933,720	20,174,826	11,335	471,445	1,134,574	28,077,481
1959	192,656	3,955,593	43,734	2,474,688	11,571	776,618	47,141	2,314,407	1,092,928	25,468,472	9,837	536,382	1,397,867	35,799,260
1960[3]													1,000,155	27,338,205
Household Type	100,672	2,397,869	25,396	1,455,721	9,685	600,091	31,770	1,484,411	778,041	19,483,418	54,591	1,916,695	40,401	1,200,855
Industrial Type	1,011	35,835	949	50,809	560	41,408	891	56,111	42,817	1,013,971	173	2,721		
Valued Over $75 Each[2]:														
1948	875	138,621	100	8,725	1,010	77,572	28	5,179	1	90	1,003	112,963	3,017	343,150
1949	15,258	318,571	333	36,737	396	30,678	321	34,161	129	17,836	2,900	294,071	19,337	732,054
1950	600	84,673	1,544	157,111	2,455	213,711	105	9,168	2	301	293	39,128	4,999	504,092
1951	936	115,640	8,234	737,354	728	64,864	271	23,712	1,390	33,576	497	60,372	12,056	1,035,518
1952	9,223	171,987	8,319	699,129	1,714	150,777	1,604	101,952	316	6,843	2,676	275,879	23,852	1,406,567
1953	392	60,920	1,836	216,189	21,486	1,901,357	2,189	169,573	800	13,100	2,630	278,952	29,333	2,640,091
1954	377	42,142	9,957	963,487	20,655	1,761,832	7,644	578,079	375	43,290	3,295	303,688	42,303	3,692,518
1955	400	43,692	21,991	1,944,868	26,252	2,064,720	4,254	321,235	6	510	4,613	409,351	57,516	4,784,376
1956	912	98,120	30,518	2,792,422	17,972	1,444,230	128	11,183	691	61,472	4,735	411,311	55,156	4,818,738
1957	825	107,569	15,757	1,522,519	7,752	621,496	2,306	190,480	1,462	134,748	4,159	355,281	32,261	2,932,093
1958	127	18,589	11,987	1,217,781	6,659	564,310	484	55,203	541	46,806	3,449	343,795	23,247	2,246,574
1959	242	67,324	10,267	1,094,355	4,949	420,282	1,897	204,557	143	22,188	3,654	294,111	21,152	2,102,817
1960[3]														
Household Type	298	37,348	8,675	774,922	3,895	354,721	4,904	378,122	205	21,122	4,675	374,966	22,652	1,941,201
Industrial Type	301	36,138	2,588	386,961	507	48,858	929	209,363	322	39,160	122	15,632	4,769	736,112
Total Imports Over $10[3]:														
1948	1,672	167,283	713	41,478	1,010	77,572	11,824	575,482	3,029	74,435	1,727	142,294	19,975	1,078,544
1949	111,905	4,470,139	5,199	290,258	747	53,163	6,003	381,785	16,109	428,991	7,604	570,018	147,567	6,194,354
1950	13,080	344,573	17,785	1,162,449	6,944	426,176	3,748	196,284	64,409	1,296,314	60,292	1,528,278	166,258	4,954,074
1954	3,851	227,435	44,352	2,832,555	5,769	360,752	49,833	2,978,662	313,971	5,696,045	37,750	1,151,272	455,526	13,246,721
1952	19,144	472,687	75,912	4,831,490	7,958	546,690	85,455	4,667,848	515,664	9,121,976	32,590	1,411,142	736,723	21,051,833
1953	46,931	1,561,349	64,364	3,915,115	29,305	2,465,001	86,441	5,258,982	440,370	8,192,194	33,579	1,532,834	700,990	22,925,475
1954	102,560	2,636,490	67,895	4,365,273	23,821	1,986,694	82,983	4,661,893	386,220	6,882,738	14,218	876,048	677,697	21,409,136
1955	138,615	2,430,912	78,363	5,210,140	36,988	2,820,907	76,249	4,390,690	652,280	12,207,140	12,720	904,139	995,215	27,963,928
1956	178,512	3,306,625	98,879	6,472,362	24,459	1,885,302	67,625	3,843,809	649,265	12,992,528	29,656	1,280,275	1,048,390	29,780,901
1957	109,240	2,167,697	76,521	4,933,421	17,890	1,362,548	59,677	3,334,125	845,038	18,510,892	17,161	1,020,972	1,125,527	31,329,655
1958	87,182	1,971,242	51,920	3,302,461	16,463	1,219,223	53,211	2,794,257	934,261	20,221,632	14,784	815,240	1,157,821	30,324,055
1959	192,898	4,022,917	54,001	3,842,143	16,520	1,196,900	49,038	2,518,964	1,093,071	25,490,660	13,491	830,493	1,419,019	37,902,077
1960[3]														
Household Type	100,970	2,435,217	34,071	2,230,643	13,580	954,812	36,674	1,862,533	778,246	19,504,540	59,266	2,291,661	1,022,807	29,279,406
Industrial Type	1,312	71,973	3,537	437,770	1,067	90,266	1,820	265,474	43,139	1,053,131	295	18,353	51,170	1,936,967

[1] Prior to January 1, 1952, East and West Germany were combined.
[2] 1948 through 1959 include imports of household and industrial type sewing machines reported as one combined total.
[3] Effective with the January 1, 1960 statistics, imports of household and industrial type sewing machines were reported separately.

Note: The above data do not reflect revisions made after publication. Some of these are described in the attached issues of *Foreign Trade Statistics Notes for July 1950, May 1951 and May 1956.*

Source of Information:
U. S. Department of Commerce, Bureau of the Census; 1948 through 1958, Report FT 110, statistical classification numbers 7550 300 and 7550 500.
U. S. Department of Commerce, Bureau of the Census; 1959, Table IM 145, statistical classification numbers 7550 300 and 7550 500.
U. S. Department of Commerce, Bureau of the Census; 1960, Table IM 145, statistical classification numbers 7550 320, 7550 350, 7550 520 and 7550 550.

[fols. 5743-5744] IN UNITED STATES DISTRICT COURT

DEFENDANT'S EXHIBIT 184

Imports into the United States of Singer Household Sewing Machines Valued over $10 for the Years 1947 through 1959

Year	Imports
1947	0
1948	1,360
1949	74,299
1950	3,623
1951	1,717
1952	6,859
1953	23,416
1954	108,304
1955	136,127
1956	176,731
1957	104,547
1958	93,575
1959	193,842

[fols. 5748-5749]

IN UNITED STATES DISTRICT COURT

DEFENDANT'S EXHIBIT 187

Manufactures—Industry Statistics

Table 6A.—Quantity and Value of Products Shipped By All Manufacturing Establishments, for the United States: 1954 and 1947

Product code	Product	1954			1947		
		Production for all purposes	Total shipments including interplant transfers		Production for all purposes	Total shipments including interplant transfers	
			Quantity	Value		Quantity	Value
		(1,000 units)	(1,000 units)	($1,000)	(1,000 units)	(1,000 units)	($1,000)
3581	Household washing machines, driers, ironers, and wringers, total	xxx	xxx	596,349	xxx	xxx	433,851
35811	Household mechanical washing machines	xxx	xxx	435,853	xxx	xxx	344,716
	Washing machines, mechanical (includes those with dish-washer attachments):						
3581111	Small size	89	85	1,743	419	408	8,042
	Standard size, electrically driven:						
3581131	Full automatic	2,315	2,285	324,280	[1]1,305	[1]1,297	[1]158,285
3581133	Semiautomatic	88	82	7,522			
3581135	Nonautomatic, wringer type	1,191	1,245	101,896	2,441	2,443	168,763
3581137	Nonautomatic, spinner type				[1]	[1]	[1]
3581151	Standard size, gasoline driven	4	4	406	109	108	9,616
35812	Other household laundry equipment	xxx	xxx	122,639	xxx	xxx	42,249
	Driers, mechanical:						
3581211	Gas	242	246	28,907	65	65	7,416
3581215	Electric	646	661	68,951			
	Ironers, mechanical:						
3581231	Table (including cabinet models)	79	79	7,987	530	530	34,834
3581235	Portable	10	10	305			
3581251	Wringers for power washing machines (sold separately)	xxx	xxx	16,489	xxx	xxx	[2]
3581298	Other household laundry equipment	xxx	xxx	37,857	xxx	xxx	[1]46,886
3581311	Parts, accessories, and attachments for household laundry equipment	(Number of units)	(Number of units)		(Number of units)	(Number of units)	
3582	Commercial laundry, dry-cleaning and pressing machinery and equipment, total	xxx	xxx	98,637	xxx	xxx	93,078
	Commercial laundry equipment and laundry presses	xxx	xxx	50,007	xxx	xxx	50,545
3582011	Washers	7,074	7,022	12,946	8,017	7,984	12,907
3582012	Extractors	5,268	5,292	5,184	8,549	8,499	6,660
3582013	Drying tumblers	8,795	8,762	4,494	9,718	9,678	3,624
3582014	Ironers, flatwork	1,380	1,403	3,356	3,545	3,526	5,762
3582015	Presses, laundry	11,595	11,579	8,810	22,260	21,706	11,621
3582019	Other commercial laundry equipment and parts, accessories, and attachments (including combination washers and extractors)	xxx	xxx	15,217	xxx	xxx	9,968
	Dry-cleaning equipment and clothing presses	xxx	xxx	26,630	xxx	xxx	39,016
	Dry-cleaning units:						
3582031	Synthetic type	1,664	1,595	7,114	1,530	1,503	6,967
3582035	Other types	282	274	1,197			
3582051	Washers	276	276	668	3,792	3,787	4,348
3582053	Extractors	153	156	195	2,373	2,360	2,514
3582055	Drying tumblers	2,297	2,308	2,118	7,699	7,662	3,217
3582057	Dry-cleaning (tailor type) presses	8,847	8,941	5,167	25,344	25,302	10,119
3582081	Other dry-cleaning equipment and parts, accessories, and attachments (including stills, filters, and combination washers and extractors)	xxx	xxx	10,171	xxx	xxx	11,851
3582000	Commercial laundry, dry-cleaning and pressing machinery, not specified by kind	xxx	xxx		xxx	xxx	3,517
		(1,000 heads)	(1,000 heads)		(1,000 heads)	(1,000 heads)	
3583	Sewing machines, parts and attachments, total	xxx	xxx	107,492	xxx	xxx	97,182
35831	Household sewing machines (including heads for sale with cabinets or cases, and heads for sale separately):						
3583111	Electric cabinet	363	385	25,895	389	362	21,771
3583131	Electric portable	332	355	20,531	232	264	10,901
3583151	Other	xxx	116	28,017	xxx	175	30,971
3583211	Industrial sewing machines (except shoe sole stitching machines)	xxx	xxx	33,049	xxx	xxx	33,539
3583311	Sewing machine parts and attachments for household and industrial sewing machines (except cases and cabinets)	(1,000 units)	(1,000 units)		(1,000 units)	(1,000 units)	
3584	Vacuum cleaners, attachments and parts, total	xxx	xxx	144,182	xxx	xxx	150,647
35841	Household vacuum cleaners, including attachments and cleaning tools and parts:						
3584111	Hand type	113	120	1,953	135	133	1,469
3584131	Other types (upright, tank, canister, and other general purpose household types)	2,594	2,616	[1]119,551	4,075	3,920	[1]131,638
3584151	Attachments or cleaning tools	xxx	xxx		xxx	xxx	
3584171	Parts for household type vacuum cleaners	xxx	xxx	17,270	xxx	xxx	12,328
35842	Commercial and industrial vacuum cleaners, including attachments and parts:						
3584211	Portable	43	44	5,408	69	61	5,212
3584231	Central systems	xxx	xxx	(3)	xxx	xxx	(3)
3584251	Attachments for commercial and industrial vacuum cleaners						
3584271	Parts for commercial and industrial vacuum cleaners						

See footnotes at end of table.

[fol. 5750] IN UNITED STATES DISTRICT COURT

DEFENDANT'S EXHIBIT 188

Department of Commerce
Bureau of the Census
Washington 25, D.C.

June 12, 1961

Production, and Quantity and Value of Products Shipped by All Manufacturing Establishments, for the United States 1958

Product	Total Production	Total Shipments	
		Quantity	Value
Household sewing machines (including heads, for sale with cabinets or cases, and heads for sale separately)			
Electric cabinets	321,868	365,068	$27,821,000
Electric portable			
Nonelectric	0	0	0

Source: 1958 Census of Manufactures.

[fols. 5751-5752]

IN UNITED STATES DISTRICT COURT

DEFENDANT'S EXHIBIT 189

	1957		1958		1959	
	Units	% of Total Japanese Imports	Units	% of Total Japanese Imports	Units	% of Total Japanese Imports
Multiple-Cam	30,142	(3.3)	44,994	(4.6)	57,732	(4.6)
Infringing Gegauf Pat. No. 2,832,302	30,142	(3.3)	41,219	(4.2)	39,344	(3.1)
Non-infringing Gegauf Pat. No. 2,832,302	—	—	3,775	(.4)	18,388	(1.5)
Replaceable Cams	85,368	(9.3)	91,396	(9.3)	206,539	(16.6)
Manual	117,121	(12.8)	202,041	(20.6)	375,111	(30.1)
Zigzag Type Unknown*	1,925	(.2)	78	—	40,127	(3.2)
Straight Stitch	679,736	(74.3)	643,407	(65.5)	567,389	(45.5)
Total Imports	914,292		981,916		1,246,898	

* Zigzag type unknown comprises either sewing machines with replaceable cam devices or sewing machines with manual devices. They do not consist of sewing machines with machine carried multiple cam devices since the Government and the defendant have agreed to the total number of such machines imported into the United States in the years 1957 through 1959, listing the amount of imports by model name and by manufacturer of such machines.

DEFENDANT'S EXHIBIT 191

COMPARISON OF U.S. SINGER PRODUCTION & IMPORTS TO JAPANESE, EUROPEAN & OTHER NON-SINGER IMPORTS, & OTHER NON-SINGER U.S. PRODUCTION OF HOUSEHOLD SEWING MACHINES FOR THE YEARS 1947-'59

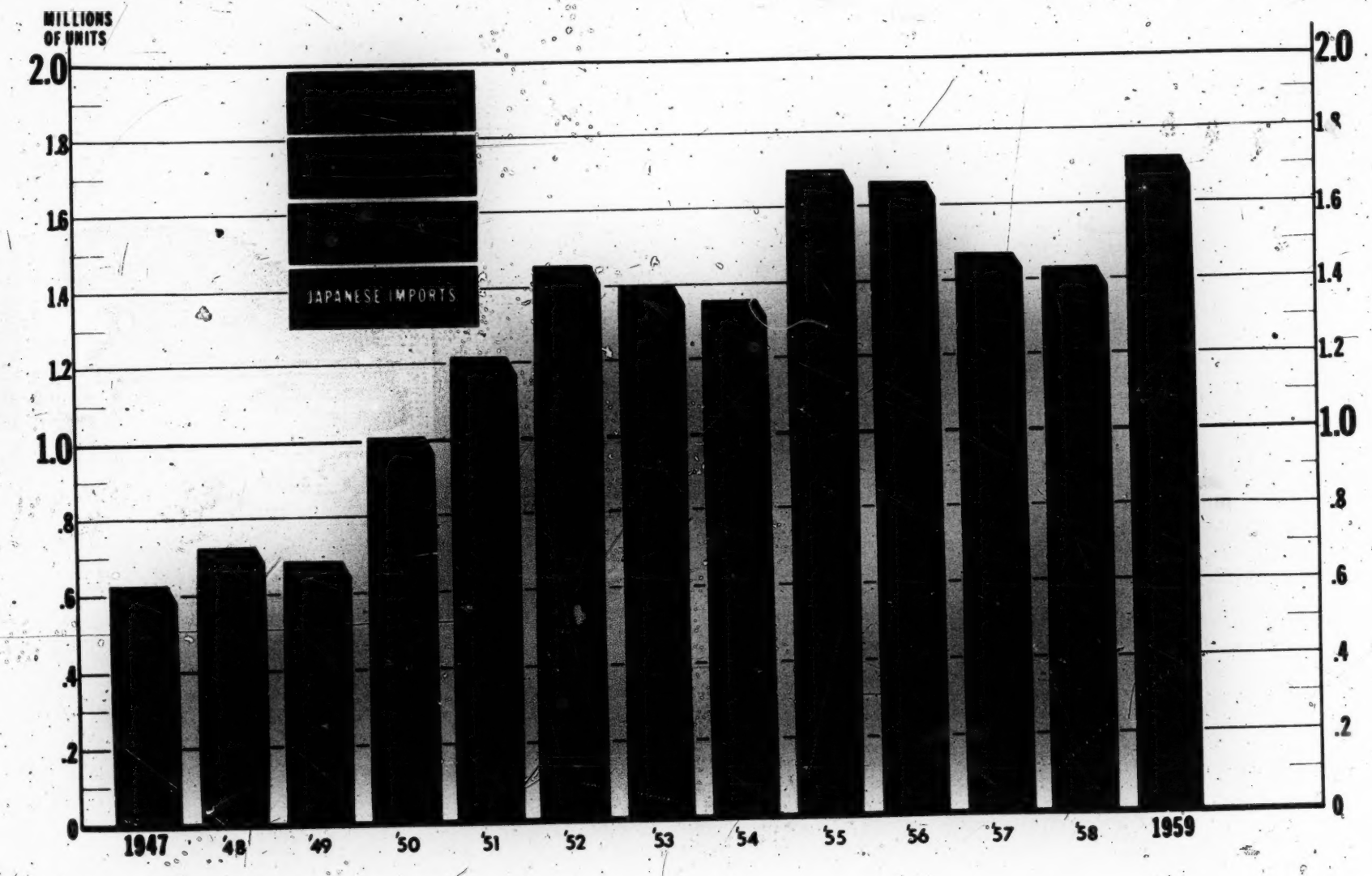

SOURCE: U.S. DEPT. OF COMMERCE & SINGER STATISTICS

In United States District Court

Defendant's Exhibit 192

N OF U.S. SINGER PRODUCTION & IMPORTS TO JAPANESE, EUROPEAN & OTHER NON-SINGER IMPORTS, R NON-SINGER U.S. PRODUCTION OF HOUSEHOLD SEWING MACHINES FOR THE YEARS 1947-'59

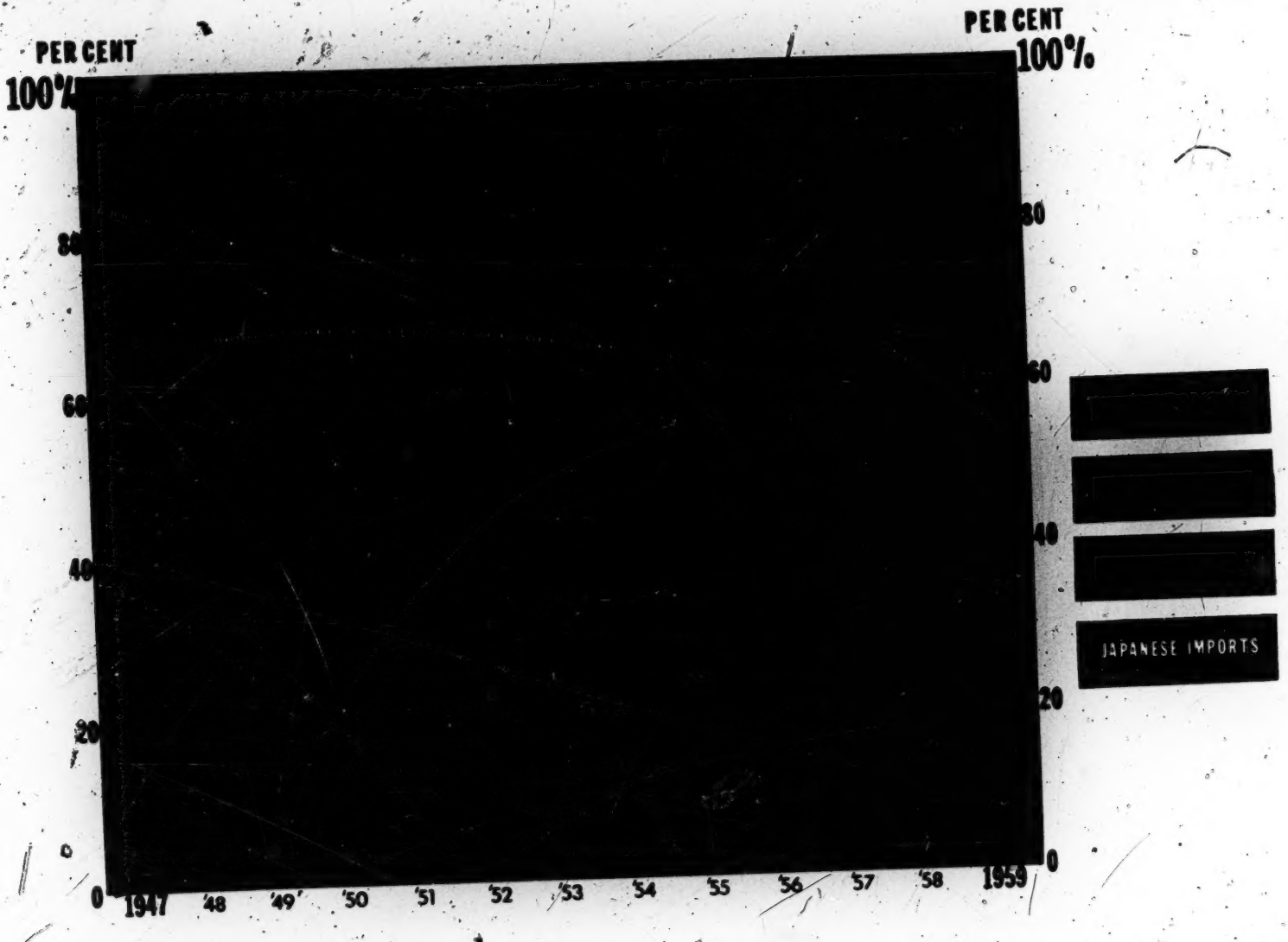

SOURCE: U.S. DEPT. OF COMMERCE & SINGER STATISTICS

[fol. 5756] IN UNITED STATES DISTRICT COURT

DEFENDANT'S EXHIBIT 194

"Behind The Scenes," November, 1958

Brother Markets Unit It Calls "Housewife Engineered"

A brand new zigzag model just added to the Brother line is earmarked for the most diversified merchandising push ever prepared to launch a new sewing machine. The model, Brother Flairmatic 190, is an ultra-simplified, all purpose sewing machine that has been designed to be a bulk seller in the Brother line.

The firm's decision to go all out on this type of model was a direct result of an extensive survey which gave the answers as to what the housewife really wanted in a sewing machine, and at her price, too. For this reason, this machine is called "housewife engineered."

Among its advanced features are twin needle sewing, push button reverse, ultra-simplified lubrication system, a new type automatic bobbin winder which winds while you are sewing and stops automatically when the bobbin is fully wound.

A particularly exciting feature is its transverse snapout race, which makes possible absolutely noiseless non-vibrating operation and provides easy cleaning and easy bobbin changing as well. Its streamlined surface is coated in a lustre beige and tan two-tone combination.

A complete promotion kit has been provided for exclusive Brother Flairmatic 190 dealers which includes new lead getting ideas, new ad mats, promotions, a Kathryn Murray testimonial, a national contest, as well as extensive sales training materials. The unit has a list price of $269.50.

EXHIBIT
U.S. Dist. Court
S.D. of N.Y.
DEFENDANT'S

DEFENDANT'S EXHIBIT 195

BROTHER SALES MAGIC!

HERE'S THE HOTTEST NEWS IN THE SEWING MACHINE BUSINESS!

PUSH BUTTON REVERSE, SINGLE OR TWIN NEEDLES, SIMPLIFIED LUBRICATION SYSTEM, ETC.

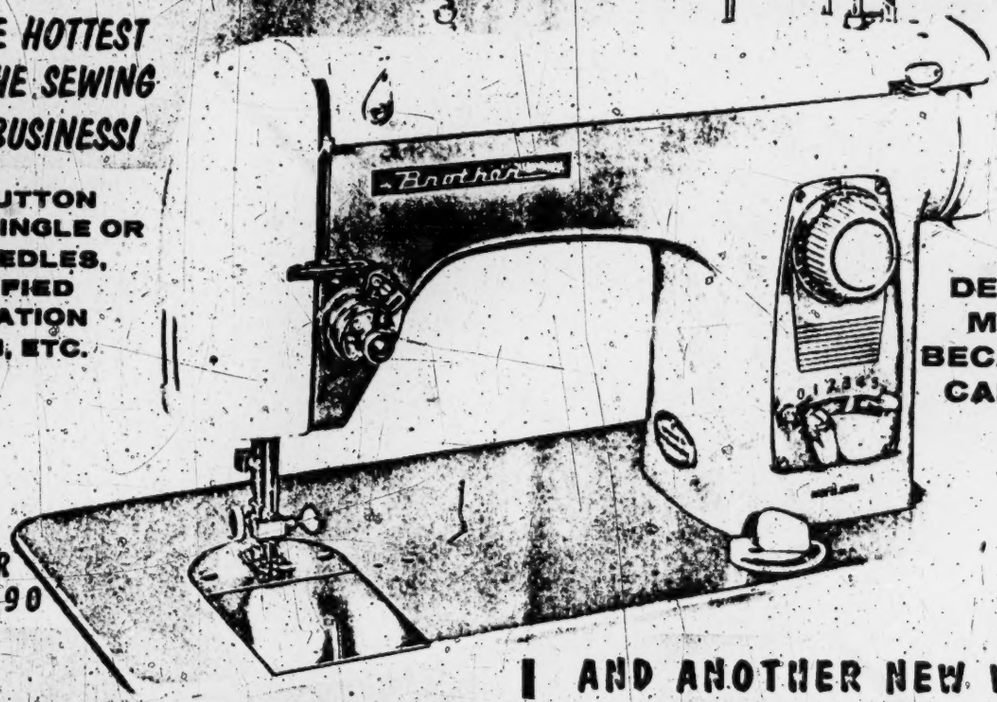

DESIGNED FOR MASS SALES... BECAUSE ANYONE CAN AFFORD IT!

The ALL NEW BROTHER Flairmatic 190

THE *ALL-PURPOSE* SEWING MACHINE!

THE MOST WANTED SELLING FEATURES!

Ultra-Simplified . . . Beautifully Designed . . . Sensationally Priced! IT'S ALL MACHINES IN ONE! INSTANT • Straight Stitching! • Fancy Stitching! • Automatic Designs! It's as simple as a straight stitcher . . . yet as versatile as the most advanced automatic!

FULLY BACKED BY:

• NATIONAL ADVERTISING • SALES PROMOTION • SALES AIDS • FAMOUS CONSUMER SERVICES

USE-TESTED

COMMENDED PARENTS

NOW'S THE TIME TO BE A BROTHER DEALER!

New York — 122 West 27th St.

Los Angeles — 1058 So. Flower St.

BROTHER *Sewing Machines*

AND ANOTHER NEW WINNER!

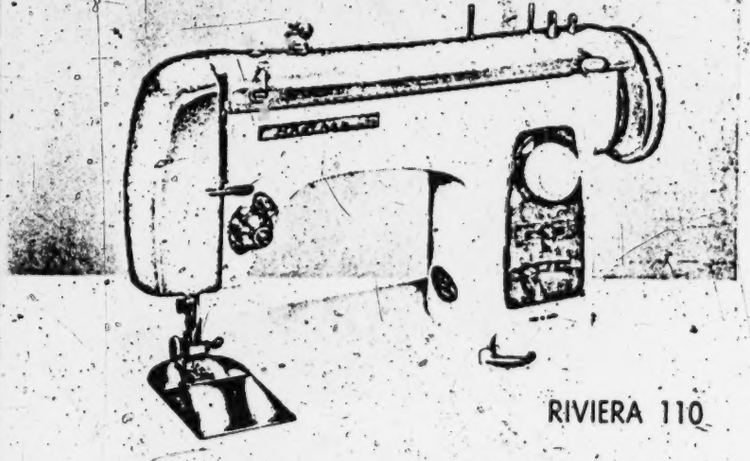

RIVIERA 110

A Beautifully Streamlined 3-Position Automatic Design . . . Jam-Packed With Advanced Features Such as Push-Button Reverse . . . Single or Twin Needle Sewing, Etc.

WRITE, PHONE or WIRE TODAY...

PLEASE RUSH ME FULL DETAILS ON NEW BROTHER MACHINES AND INFORMATION ON SENSATIONAL NEW MERCHANDISING KIT AND NEW LEAD-GETTING IDEAS.

Dealer's Name _____

Address _____

City _____ **Zone** _____

State _____

BROTHER

HAS AN ADVANCED DEGREE...

MASTER OF SEWING

DEFENDANT'S
JUN 27 1956
197

BROTHER sewing machines are nationally advertised

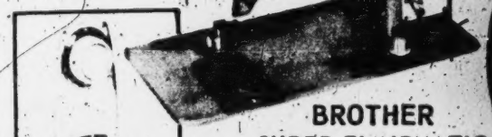

AUTOMATIC CONTROL PANEL FOR INSTANT
- straight stitching
- fancy stitching
- ornamental designs

IT'S ALL MACHINES IN 1

BROTHER SUPER FLAIRMATIC MODEL 190B

Ultra-simplified all-purpose sewing machine with world's only "self-contained" ONE-TOUCH AUTOMATIC BUTTONHOLE feature. Outstandingly engineered with sensational automatic features for straight and fancy sewing.

BROTHER COMPANION MODEL 220

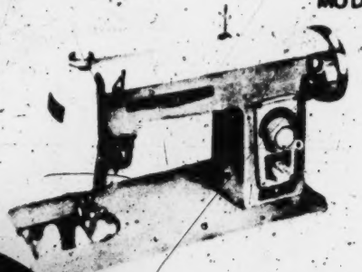

Deluxe straight stitcher with easy pushbutton reverse and dial drop feed. As advanced as it is beautiful.

BROTHER CITATION MODEL 180

Remarkably beautiful streamlined straight with many automatic features.

BROTHER PACESETTER MODEL 200

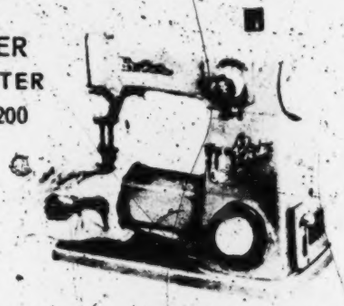

World's most advanced automatic with Miraculous "Wishing Dial".

CUSTOMATIC 240

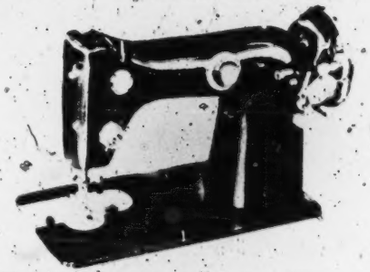

World's greatest value in zigzag sewing. Precision perfect zigzag for straight and fancy sewing.

BROTHER GALAXIE MODEL 230

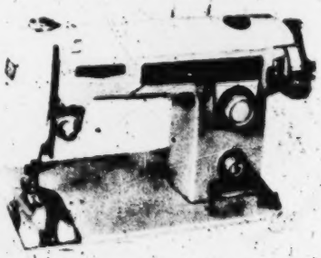

"A fully automatic streamliner for fancy or plain sewing. With pattern keys for hundreds of automatic designs and INSTANT AUTOMATIC BUTTONHOLES".

BROTHER SUPER SELECTOMATIC MODEL 100

DARNS SOCKS

SHELL STITCHES AND HEMS LACE FOR DAINTY LINGERIE AND BABY CLOTHES

100% streamlined automatic with all BUILT-IN features. You see the stitch you use on picture dial.

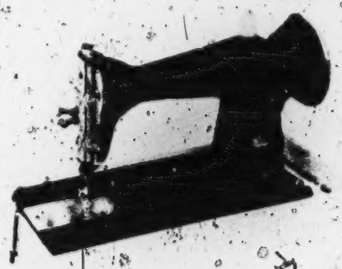

BROTHER CONVENTIONAL MODEL 40B

Value packed dependable straight with many advanced features

BROTHER ELECTRA MODEL 140

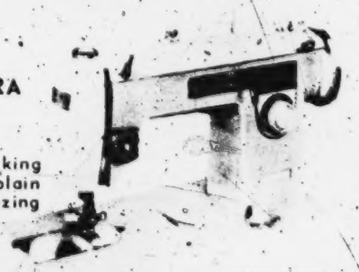

Attractive zigzag of striking design which performs plain or fancy sewing with amazing simplicity.

PARTS AND SERVICE ALWAYS AVAILABLE. NATIONWIDE DISTRIBUTION FROM COAST TO COAST THROUGH 2000 AUTHORIZED BROTHER DEALERS. FOR THE NAME OF YOUR NEAREST DEALER, WRITE DIRECT TO:

BROTHER

NEW YORK	CALIFORNIA	CHICAGO	CANADA
36-50-38TH ST. L.I. CITY	1058 SOUTH FLOWER ST., LOS ANGELES, CALIF.	444 NORTH LAKE SHORE DRIVE, CHICAGO, ILL.	5061 COTE DE LIESSE RD. MONTREAL, P.Q.

[fol. 5764] IN UNITED STATES DISTRICT COURT

DEFENDANT'S EXHIBIT 199

3.3 Radial Cam Layout Distortion

If the pitch curve of the displacement diagram is plotted on a radial cam, we see that it is distorted towards the cam center. That is, the displacement-diagram pressure angle is not the same as the pressure angle measured on the actual radial cam. As an example, in Fig. 3.1*a*, let us take a straight-line pitch curve *OB* in the displacement diagram.

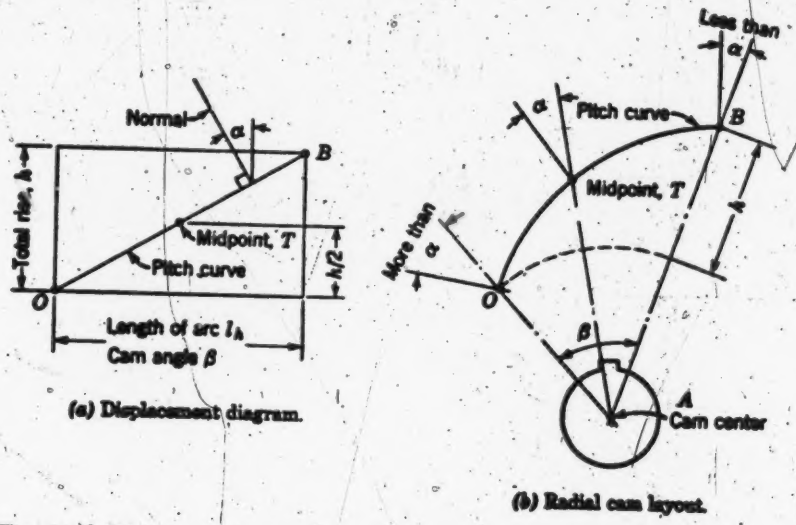

Fig. 3.1. Radial cam layout distortion. [Pressure angles different in (*a*) from those in (*b*).]

[fol. 5765] IN UNITED STATES DISTRICT COURT

DEFENDANT'S EXHIBIT 200

June 27, 1961.

Manufacture and Assembly of 401 Machine Cams

The 401 machine is provided with a stack of seven steel cams which are secured within the machine frame and are not adapted to be removed therefrom during the normal life of the machine. In order to remove the cam stack and then remove one of the cams, a mechanic supplied with the proper tools, must be employed.

Below are the manufacturing operations required for the manufacture and assembly of the seven steel cams:

1. Each of the seven cams is first rough punched by press with an appropriate die from a strip of steel material so that the cam, its four holes, and its peripheral cam surface, with its various hills and valleys, are formed in the rough. Since each of the seven cams has its own particular cam surface configerations, seven different punching operations are necessary in order to produce the seven rough cams. Naturally, in production, seven different punching dies are used, with the result that there are accumulated seven different groups of cams.

2. Rough cams have to be pressed flat in press fed by hand.

3. The opposite two flat faces of each of the cams are then ground on a grinding machine, fed by hand by an operator, so that the thickness of the cams are uniform. Again, the cams are maintained in groups, all of the cams of any one group having the same peripheral design.

4. The various cams are then individually shaved by an Essa press with an appropriate die, with the result that the peripheral cam edges of each cam are finished to size. This requires seven individual shaving operations, since there are seven different steel cams. Again, in production, we end up with seven different groups of cams.

[fols. 5766-5767] 5. The cams are then placed in a rumbling machine for the purpose of removing the rough edges of the cam surfaces. The cams are placed in the rumbling ma-

chines in groups with all of the cams in any one group having the same peripheral design.

6. Deburr center hole of cam.

7. Seven different cams comprising a set are then hand assembled together in proper sequence and placed in a jig with the seven cams being placed in proper phase relative to each other by means of a pin which is inserted into one of the two holes provided in the cam during the first punching operation.

8. Each unit of seven cams is then hand inserted into a boring machine for the purpose of boring the positioning hole to proper size, which hole receives the positioning pin.

9. Each unit of seven cams is then taken to the 401 machine assembly line and is hand inserted into a 401 machine so that the stack will be mounted upon a vertical shaft and thereafter locked upon such shaft by means of a plate and several locking screws.

[fol. 2479] IN UNITED STATES DISTRICT COURT

EXHIBIT S-11

Before the United States Tariff Commission

In the Matter of Unfair Methods of Competition and Unfair Acts Section 337, Tariff Act of 1930 as Amended

Household Automatic Zigzag Sewing Machines, and Parts Thereof

Complaint of The Singer Manufacturing Company

I Summary of Complaint

The Singer Manufacturing Company, hereinafter referred to as "Singer", is the owner of a duly issued and valid United States patent No. 2,832,302, covering a distinctive, new and improved household automatic zagzag sewing machine.

Singer has spent over nine million dollars in developing, promoting and marketing the automatic zigzag machine covered by said patent.

In complete disregard of Singer's United States patent rights a host of foreign-made automatic zigzag machines, primarily from Japan, are being imported into the United States, which infringing machines represent approximately 50% of Singer United States sales of automatic zigzag sewing machines and are increasing.

The tremendous volume of imports from Japan of household sewing machines other than automatic zigzag machines has eliminated all domestic manufacturers other [fol. 2480] than Singer and one small firm which, as an ancillary part of its machine tool business, manufactures small quantities of straight-stitch (not zigzag) sewing machines.

Unless early and effective relief is granted, the increasing volume of infringing imports similarly threaten to result in curtailment and ultimate cessation of manufacturing operations in the United States of automatic zig-

zag machines with heavy loss of highly paid, highly skilled labor and large capital investment.

Singer has filed court actions to enforce its patent rights, but the large number of importers, known and unknown, together with the numerous different sources of foreign supply, make the remedy at law wholly inadequate.

Section 337, as interpreted and applied by the Commission and the courts, affords the only remedy and thus Singer hereby prays that the Commission recommend to the President that household automatic zigzag sewing machines and parts thereof covered by the said United States patent No. 2,832,302, be excluded from entry into the United States for the term of said patent.

II Complaint

1. (a) Complaint is hereby made, pursuant to Section 337 of the Tariff Act of 1930, as amended, against unfair methods of competition and unfair acts in the importation into the United States and sale therein of household automatic zigzag sewing machines and parts thereof which embody, employ or contain the inventions covered by the claims of United States Letters Patent No. 2,832,302, dated April 29, 1958 (a copy of which is annexed hereto as Exhibit 1) duly issued to and owned by The Singer Manufacturing Company, complainant herein, hereinafter re- [fol. 2481] ferred to as "Singer". Said automatic zigzag sewing machines covered by said Exhibit 1 patent are referred to hereinafter as "automatic zigzag machines".

(b) Singer seeks by this complaint to obtain exclusion from entry into the United States of the aforesaid automatic zigzag machines which, as described in Paragraph 3 infra, are readily identifiable and distinguishable through visual examination alone from other types of zigzag machines as well as from other types of household sewing machines. Non-automatic zigzag machines, as well as all other types of household sewing machines, would be unaffected by the relief sought herein.

Singer Corporation Structure

2. (a) The complainant, Singer is a corporation organized under the laws of the State of New Jersey in 1873, and is the successor to The Singer Manufacturing Company organized under the laws of the State of New York in 1863, which was the successor to I. M. Singer & Company, a co-partnership formed in Boston, Massachusetts in 1850.

(b) Singer maintains an office and place of business at 107 Trumbull Street, Elizabeth, New Jersey, and executive offices at 149 Broadway, New York, New York.

(c) Singer's total invested capital in the United States is over $100,000,000.00.

(d) Singer owns, operates or otherwise controls factories in Bridgeport, Connecticut (industrial sewing machines); Elizabeth, New Jersey (household and industrial sewing machines and needles); Trumann, Arkansas and Pickens, South Carolina, (sewing machine cabinets and tables); and in Anderson, South Carolina, (manufacture and assembly of household sewing machines).

[fol. 2482] (e) Parts of the household automatic zigzag machines which are the subject of this complaint are manufactured in both the Elizabeth, New Jersey and Anderson, South Carolina plants, but all of such machines are assembled at the plant in Anderson, South Carolina.

In each of the aforesaid plants there is substantial idle plant capacity.

(f) Since its inception in 1850, the principal product of Singer has been a straight-stitch sewing machine principally adapted for use in the home. In the last several years, however, the most important United States product has become the automatic zigzag machine, the subject of this complaint, which enables the user not only to perform all of the sewing operations heretofore produced on the straight-stitch machine but, in addition, various ornamental and functional zigzag stitches.

(g) (I) In 1957, Singer employed a total of 24,000 persons with a payroll for that year amounting to $107,500,000. for all sewing machine manufacturing, distributing and sales operations in the United States. Of this number, approximately 15,000 workers were engaged directly or indirectly in the manufacture, assembly, distribution and

sales of the automatic zigzag machine, the subject of this complaint.

(II) Current wages of Singer employees engaged in the production and assembly of the aforesaid zigzag machines are in line with those paid in other comparable United States industries. For example, in Singer's largest United States factory at Elizabeth, New Jersey, such wages average about $2.25 per hour plus, in each case, fringe benefits of approximately $.68 per hour.

[fol. 2483] (III) Many of the aforesaid employees are of the highly skilled type of labor and attain that status only after long training of persons having high aptitudes for this art. The art and skills required in work on Singer machines of this type are soon lost and there is no other plant in the United States in which Singer workers can find comparable employment. Because of the availability of those skills in Singer plants, Singer was a notable source of manufacturing facilities for the manufacture, during World War II, of articles requiring such skills, and Singer continues to be a substantial manufacturer of products for the Armed Forces.

(h) Singer's four principal wholly-owned subsidiaries are:

(1) (I) Singer Sewing Machine Company, a New Jersey corporation which sells all Singer products in the Western Hemisphere, most of Africa, Australia, Asia, and other parts of the world. This selling organization is divided into the following five departments:

The Family Trade Department which supervises the operations of more than 1,800 Singer Sewing Centers plus a substantial number of independent appliance and department stores which sell Singer household sewing machines (including the automatic zigzag machine, the subject of this complaint) in the United States and Canada at the retail level; the Manufacturing Trade Department which markets (through branch offices in 44 United States and Canadian cities) the highly specialized machines which Singer makes for use in the needle trade (in most foreign countries a similar Manufacturing Trade Department organizational group exists); and the Latin America, Orien-

tal and European Departments which supervise selling operations in their respective territories.

[fol. 2484] (II) The Singer Sewing Centers operated by the Family Trade Department are all under the direct control of Singer Sewing Machine Company. With certain necessary limitations, they are alike in appearance and function. In addition to selling Singer products, they provide parts, service and sewing instructions. The sales personnel who operate these centers are salaried employees of Singer Sewing Machine Company.

The appliance and department stores which sell Singer products are independent of Singer ownership.

(2) Diehl Manufacturing Company, Singer's electrical division, which operates a factory at Finderne, New Jersey, for the manufacture of electrical motors, vacuum cleaners, fans and electrical products used in Singer sewing machines including the Singer automatic zigzag sewing machine, the subject of this complaint. These products are sold to the parent company and in certain cases to the electrical trade generally.

(3) Poinsett Lumber and Manufacturing Company which owns and operates timber lands, lumber mills and sewing machine cabinet factories in Trumann, Arkansas and Pickens, South Carolina, and a sewing machine factory in Anderson, South Carolina. The cabinets made in these factories are sold with and as a part of the Singer automatic zigzag sewing machine, the subject of this complaint.

(4) Haller, Raymond and Brown, Inc., a research and development company which has laboratories and other facilities in State College, Pennsylvania. It does research in the fields of electronic and mechanical engineering, sewing machines, applied physics and weapons system integration.

[fol. 2485] The Patented Machine

3. Essentially, United States patent No. 2,832,302, (Exhibit 1), discloses and claims an invention which enables an operator by a mere manipulation of one or more levers or knobs to preselect one of a great variety of ornamental stitch patterns which the machine, upon being actuated, will automatically reproduce in the material to be sewed. The use

of this invention entirely precludes the necessity for the operator to replace or substitute a different mechanism such as a cam or eccentric in a sewing machine each time it is desired to prepare the machine to produce a different type of ornamental stitch. More specifically, the invention defined by patent No. 2,832,302 provides an ornamental stitch sewing machine with a built-in stack of differently shaped rotary cams (each for forming a different pattern of needle movement transverse to the direction of movement of the material through the machine), a single cam follower with connections for swinging the needle transversely in response to the changes in profile of the selected cam, and, for pattern changes, an operator-responsive means to move the cam follower from engagement with a cam and thereafter relatively shift the follower and the cam stack lengthwise of the cam axis whereby the follower can be caused to engage and respond to any selected cam. Thus with each new cam selection the machine will be able to produce automatically a new ornamental stitch.

4. Singer has granted royalty-free licenses under said patent No. 2,832,302 to Arnaldo Vigorelli, S.p.A., Milan, Italy, and to Fritz Gegauf, A.G., Steckborn, Switzerland, for importation into the United States of certain designated models of automatic zigzag machines manufactured [fol. 2486] by said companies in Italy and Switzerland, respectively. Each of said licenses was granted in connection with the settlement of overlapping subject matter in applications for United States patents filed by the respective parties. Singer is presently in the process of granting a license under said patent No. 2,832,302 to Sears, Roebuck and Company of Chicago, Illinois, for importation into the United States but limited to a certain designated model automatic zigzag machine manufactured in Western Germany by Gritzner-Kayser A.G. No other licenses are in existence or in contemplation.

Imports under such licenses have been and are expected to continue to be very small.

Singer has been and remains concerned primarily with maintenance and expansion of its manufacturing operations in the United States and protection of said United States operations from destructive and unfair foreign competition.

History of Development and Singer's Research

5. Although non-automatic zigzag machines have been known since long prior to the turn of the century, the use of such machines in any notable degree in the home did not occur until after World War II. Cognizant of the limitations inherent in these machines, Singer has conducted a program of research to create a versatile zigzag machine automatic in its operation and free of the objectionable features of the then existing zigzag machines. This research culminated in the present Singer automatic zigzag machine and this product met immediate marketing success. The first seven months' sales of this machine, for example, were in excess of the total annual sales of any predecessor zigzag machine made by Singer, and at the present time, this machine constitutes Singer's most important product.

[fol. 2487] 6. (a) Singer has expended large sums of money for research, advertising and promotion in a continuous program of improving models of household sewing machines already on the market and in developing and introducing new models. In particular, Singer has expended large sums of money in developing, promoting, producing and marketing in the United States the aforesaid automatic zigzag machine. Said machine is advertised and sold under the trademark "Slant-O-Matic".

(b) In particular, since 1952, Singer has expended $7,000,000 in developing the design and preparing tools for production of the aforesaid automatic zigzag machine. The amount expended for advertising this specific machine alone, for the last year and one half, amounted to $2,430,000.00.

Singer's Good Will in Patented Machines

7. Singer household sewing machines, and in particular the aforesaid automatic zigzag machine, are favorably known throughout the trade and commerce of the United States and have acquired and possess a valuable good will. The consequent wide public acceptance of Singer's automatic zigzag machine concurrently with the decrease in sales of the Singer straight-stitch household machine due to foreign competition has resulted in the dollar volume of the sales of Singer's automatic zigzag machine being a very substantial part of all sales in the United States of

all Singer household sewing machines. Said good will and the maintenance of production in the United States of said automatic zigzag machine will be severely damaged unless the unfair competition through importation of infringing low-priced automatic zigzag machines is effectively restrained and prevented.

[fol. 2488] Foreign Imports of Infringing Machines

8. Household automatic zigzag sewing machines of foreign manufacture which are similar to the Singer product and which embody, employ or contain the inventions of the claims of said patent No. 2,832,302 are now being unfairly imported into the United States in sharply increasing volume. Said imported machines are being unfairly sold and offered for sale throughout the United States by a large number of importers and distributors, many unknown (all as will appear infra Paragraphs 26, 27 and 28), at extremely low prices which cannot be met by Singer (infra Paragraphs 12, 13, 14 and 15).

9. Imports of household automatic zigzag sewing machines are not separately reported by the United States Department of Commerce. On information and belief, such imports were small prior to 1957. On further information and belief, at or about and following the time when the Singer automatic zigzag machine was successfully introduced to the American market and a large advertising and promotional campaign therefor undertaken by Singer, imports sharply increased.

10. On information and belief, imports of the aforesaid automatic zigzag machines have come principally from Japan and now represent approximately 50% of sales by Singer of automatic zigzag machines and imports are increasing. The volume of imports of said household automatic zigzag sewing machines from countries other than Japan is unknown.

Singer's Retail Price of Patented Machines

11. Singer's aforesaid automatic zigzag machine is currently sold and offered for sale in the markets of the United States through its retail distributing centers and independent stores for a base retail price of $300.

[fol 2489] Retail U.S. Price of Foreign Machines

12. On information and belief, imported infringing machines are being sold and offered for sale throughout the markets of the United States at prices $100 or more below the said Singer price. No firm price exists for the sale and offer for sale of said imported machines of Japanese manufacture in the markets of the United States, and the quoted price of $100 or more below the retail price of Singer is seldom, if ever, adhered to. For example, a recent purchase from a United States retail store of such an automatic zigzag machine made in Japan by the Sanshin Company was made for $148 with no effort at all on the part of the purchaser to obtain a more favorable price. On further information and belief, a general practice exists of making reductions in any quoted price to insure a sale.

Japanese (MITI) "Check" Prices

13. As evidence of the ability of Japanese manufacturers to undersell the Singer products in the markets of the United States, on information and belief, the minimum or so-called "check" prices established by the Ministry of International Trade and Industry of Japan (MITI), for export from Japan of said automatic zigzag machines, range from $40 to $54 each.

Wholesale Prices in Japan

14. As further evidence of the ability of the Japanese manufacturers to undersell the Singer products in the markets of the United States, on information and belief, the current wholesale prices at which said Japanese-made automatic zigzag machines are sold and offered for sale for home consumption in Japan range from 11,050 to 17,270 yen, equivalent (at 360 yen—$1.00) to $30.70 to $48.00 each.

U.S. Wholesale Prices of Japanese Machines

15. The prices at which said automatic zigzag machines made in Japan are sold and offered for sale at wholesale throughout the United States are far below any price which can be set by Singer.

[fol. 2490] Other Foreign Machines

16. Imports of said machines from countries other than Japan are also sold and offered for sale throughout the markets of the United States at prices below the price of said Singer product.

U.S. Tariff Duty

17. The present tariff duty imposed upon the aforesaid machines under Paragraph 372, Tariff Act of 1930, as amended, is only 10% ad valorem. Any increase in such rate within the limits prescribed by existing law would be ineffective to restrain or prevent the unfair methods of competition and unfair acts herein complained against.

Singer Idle Capacity

18. Singer has idle plant capacity and equipment available in the United States (supra Paragraph 2 (e)) to increase its present production in the United States of said automatic zigzag machines by more than the amount of infringing and displacing imports. Any such increased domestic production would allow the employment of more American labor and reverse the trend of recent years forced upon Singer by severe import competition. For example, in the period 1950 to the present time, Singer has had to reduce its United States factory working force from 16,700 to 11,000 employees, a reduction of 5,700 employees.

Imports of Other Household Sewing Machines

19. The competitive situation which now faces Singer in attempting to maintain and expand production of automatic zigzag household sewing machines in the United States is illustrated by the recent history of the impact on American manufacturers of imports of other types and kinds of household sewing machines.

Prior to World War II, imports of household sewing machines into the United States were small and unim-[fol. 2491] portant. Such imports from Japan were negligible. The entire production of sewing machines in Japan prior to World War II was small, if not negligible.

20. Since World War II, production of household sewing machines in Japan has expanded enormously and that coun-

try has become an important factor in the world trade of this product. Since World War II, Japan has embargoed imports of every type of household sewing machine into that country. Imports into the United States from Japan, on the other hand, have shown a startling increase. From a total in 1948 of 3,029 machines, imports into the United States of all types and kinds of sewing machines in 1950 increased to 64,409 and in 1957, reached new record heights of well over 800,000 not including imports valued at and below ten dollars each. Imports have continued to increase in the year 1958. A tabulation of imports of all types and kinds of sewing machines from Japan, from other selected countries, and total imports from all sources for the years 1948 to and including six months of 1958, is attached hereto marked Exhibit 2.

Effect of Imports on Domestic Manufacturers

21. The tremendous volume of imports into the United States, as demonstrated by said Exhibit 2, has had a direct effect upon the sewing machine industry in the United States. In the period since World War II, on information and belief, the following companies which had theretofore been engaged in the manufacture in the United States of household sewing machines of various types have ceased such manufacturing operations.

United States Concerns Which Since World War II Have Discontinued the Manufacture in the United States of Household Type Sewing Machines

[fol. 2492] White Sewing Machine Corp.
11720 Berea Road
Cleveland 11, Ohio

Free Sewing Machine Company, Inc.
9855 W. Pico Boulevard
Los Angeles 35, California

The Bell Manufacturing Corp.
50 Church Street
New York 7, New York

Gellman Manufacturing Company, Inc.
1700 First Street
Rock Island, Illinois

22. Of the foregoing companies, on information and belief, the White Sewing Machine Corp., the Free Sewing Machine Company, Inc., and The Bell Manufacturing Corp. have become importers and distributors of foreign-made household sewing machines.

23. On further information and belief, Singer is with one small exception (New Process Gear Company of Syracuse, New York) the sole surviving manufacturer of household sewing machines in the United States.

Singer's Injury

24. (a) Singer has sustained injury from the increasing volume of foreign competition demonstrated by Exhibit 2. As a direct result of such increasing import volume and sale in the United States at low prices of such imported products, Singer has been forced steadily to reduce the number of household sewing machines manufactured by it in the United States. To meet such competition Singer has during the past ten years imported from its plants in Europe substantial numbers of sewing machines. To the date hereof Singer has not imported any of the aforesaid automatic zigzag machines. If the past pattern of severe competition continues unchecked, however, that alternative must be faced.

[fol. 2493] 25. Over the Years Singer has steadily increased its expenditures for research and development, has created and improved the latest manufacturing and production facilities and methods and systems of production, has maintained an efficient and highly integrated service department, and has produced and marketed constantly improved models of its products. In addition, Singer has expended large sums of money annually for advertising, education, and sales promotion through magazines, periodicals, newspapers, radio and television programs, all on a nation-wide basis (supra Paragraph 6). Despite these efforts, imports of household sewing machines particularly from Japan continue to increase.

Known Importers

26. On information and belief, automatic zigzag machines which embody the invention covered by the claims of Singer's patent No. 2,832,302 have been and are being imported into the United States by the following importers:

United States Importers of Machines Which Embody the Inventions of Singer Patent No. 2,832,302

Daiichi Bussan Kaisha Ltd. Offices at:

530 Fifth Avenue
New York 36, New York
141 W. Jackson Boulevard
Chicago 4, Illinois
Burt Building
1700 Paterson Street
Dallas, Texas
510 W. Sixth Street
Los Angeles 14, California
610 Paydras Street
New Orleans 12, Louisiana
310 S. W. Fourth Avenue
Portland 4, Oregon
465 California Street
San Francisco 4, California
821 Second Avenue
Seattle 4, Washington
Seawol Distributors Inc.
2736 W. Pick Boulevard
Los Angeles 6, California
S. K. S. Machine Company
4448 Broadway
New York 33, New York

Standard Sewing Equipment Corp. Offices at:

76 Ninth Avenue
New York 14, New York
19-23 Halsted Street
Chicago, Illinois
135 Glass Street
Dallas, Texas

[fol. 2494] United States Importers of Machines Which Embody the Inventions of Singer Patent No. 2,832,302

Brother International Corp.
122 W. 27th Street
New York 1, New York
Brother International Corp. of California
1059 South Flower Street
Los Angeles 15, California
Modern Sewing Machine Company, Inc.
302 Saratoga Avenue
Brooklyn 33, New York
Free Sewing Machine Company, Inc.
9855 W. Pico Boulevard
Los Angeles 35, California
The Bell Manufacturing Corp.
50 Church Street
New York 7, New York
Morse Sewing Machine & Supply Corp.
122 W. 26th Street
New York 1, New York
Royal Sewing Machine Corp.
344-354 Junius Street
Brooklyn 12, New York
Kanematsu New York, Inc.
150 Broadway, Room 2020
New York 38, New York
606 S. Fall Street
Los Angeles, California

Consolidated Sewing Machine Corp. Offices at:

1115 Broadway
New York 10, New York
138 Glass Street
Dallas 7, Texas
560 W. Harrison Street
Chicago 7, Illinois
925 So. Grand Avenue
Los Angeles 15, California
Montgomery Ward & Company, Inc.
Chicago, Illinois

Modern Sewing Machine & Supply Corp.
253-255 Rosbury Street
Boston 19, Massachusetts
White Sewing Machine Corp.
11720 Berea Road
Cleveland 11, Ohio

Stradivaro Sewing Machine Corp. of America Offices at:

302 Saratoga Avenue
Brooklyn 33, New York
1629 W. Carroll Avenue
Chicago 12, Illinois
212 S. Liberty Street
Winston-Salem, North Carolina
Balin Export Company
15 Moore Street
New York, New York
Elize Mercantile Corp.
1140 Broadway
New York 1, New York
Rockford Sewing Machine Company
321 W. State Street
Rockford, Illinois
Atlas Sewing Centers, Inc.
7630 Biscayne Blvd.
Miami, Florida

Known Foreign Manufacturers

27. On information and belief, automatic zigzag machines which infringe the claims of said patent No. 2,832,302 imported into the United States by the persons listed in [fol. 2495] Paragraph No. 26, and others unknown to Singer, are manufactured by one or more of the following firms outside of the United States and/or by others unknown:

Manufacturers of Machines Which Are Imported Into the United States and Infringe Singer Patent No. 2,832,302

Located in Japan

Nippon Sewing Machine Manufacturing Company, Ltd.
No. 25, 9-chome, Horita-dori, Mizuho-ku, Nagoya, Japan

Aichi Kogyo Company, Ltd.
50 Nakayama, Shigehara, Kariya City, Aichi Pref., Japan

Bansyu Sewing Machine Manufacturing Company, Ltd.
No. 961, Takaoka Takino-cho, Kato-gun, Hyogo Pref., Japan

Mitsubishi Electric Manufacturing Company, Ltd.
Tokyo Building, No. 3, 2-chome, Marunouchi, Chiyoda-ku, Tokyo, Japan

Tokyo Juki Industrial Company, Ltd.
No. 23, Kabuki-cho, Shinjuki-ku, Tokyo, Japan

Nakajima Sewing Machine Manufacturing Company, Ltd.
No. 45, 4-Bancho, Kozu, Minami-ku, Osaka, Japan

Sanshin Sewing Machine Company, Ltd.
No. 1579, Inatsuke-Shimashita-cho, Kita-ku, Tokyo, Japan

Maruzen Sewing Machine Company, Ltd.
No. 53, 1-chome, Ikaino-Higashi, Ikuno-ku, Osaka, Japan

Fuji Precision Machinery Company, Ltd.
Bridgestone Building, No. 1, 1-chome, Kyobashi, Chuo-ku, Tokyo, Japan

Happy Sewing Machine Manufacturing Company, Ltd.
No. 373, Miyamachi, Yamagata City, Japan

Fukoku Sewing Machine Manufacturing Company, Ltd.
No. 4, 2-chome, Toyo-cho, Naka-ku, Nagoya, Japan

Nishizawa Super Sewing Machine Company, Ltd.
No. 31, 3-chome, Ikunotashima-cho, Ikuno-ku, Osaka, Japan

Kawaura Sewing Machine Company, Ltd.
No. 18, 1-chome, Hijie-cho, Nakamura-ku, Nagoya, Japan

Fukusuke Tabi Company, Ltd.
No. 1944 Mimihara-cho, Sakai, Osaka, Japan

Sankyo Seiki Industry Company, Ltd.
No. 32, Mikuriya, Fuse, Osaka, Japan

[fol. 2496] Manufacturers of Machines Which Are Imported Into the United States and Infringe Singer Patent No. 2,832,302

Koyo Seiko Company, Ltd.
No. 2, Unagidani, Nishino-cho, Minami-ku, Osaka, Japan
Feather Sewing Machine Manufacturing Company, Ltd.
No. 73, 2-chome, Shiroyama-cho, Joto-ku, Osaka, Japan

Located in Sweden

Husqvarna Vapenfabriks AB
Husqvarna, Sweden

Located in Western Germany

Gritzner-Kayser A.G.
Karlsruhe, West Germany
Phoenix Nahmaschinen A.G.
Bielefeld, West Germany
Meister-Werke G.m.b.H.
Schweinfurt/Main, West Germany

Located in Switzerland

Turissa Nahmaschinenfabrik A.G.
Zurich, Switzerland
Favta Aktiengesellschaft Nahmaschinenfabrik
Kreuzlingen, Switzerland
Nahmaschinen-Fabrik Helvetia, A.G.
Luzern, Switzerland
Apparatebau A.G.
Goldach, Switzerland

Located in Italy

Borletti
Milan, Italy
Industria Macchine Utensili E Per Cucire
Pavia, Italy

Located in Spain

Maquinas De Coser Alfa S.A.
Eibar, Spain

Known Foreign Exporters

28. On information and belief, automatic zigzag machines which embody the invention covered by the claims of Singer's patent No. 2,832,302 have been and are being exported [fol. 2497] to the United States by the following firms and/or by others unknown:

Exporters to the United States of Machines Which Infringe Singer Patent No. 2,832,302

Brother International Corporation
No. 1, 1-chome, Akasaka Tamachi, Minato-ku, Tokyo, Japan
Daiichi Bussan Kaisha, Ltd.
Nissan Building, No. 2, 1-chome, Shibatamura-cho, Minato-ku, Tokyo, Japan
Nichimen Company, Ltd.
No. 15, 2-chome, Nakanoshima, Kita-ku, Osaka, Japan
Elize Mercantile Corporation
No. 42-45, 2-chome, Bakuromachi, Higashi-ku, Osaka, Japan
Eastern Machinery Trading Company, Ltd.
No. 117, Sandanda-Chitose, Amagasaki, Osaka, Japan
Kanematsu & Company, Ltd.
Daiwa Building, No. 125, 4-chome, Minami-Kyutaromachi, Higashi-Osaka, Japan
Commercial Pacific Tokyo, Ltd.
Hotel Teito, Room 315
No. 10, 1-chome, Marunouchi, Chiyoda-ku, Tokyo, Japan
Masuyama Trading Company, Ltd.
Masonic Building, No. 13, Sakae-cho, Shiba, Minato-ku, Tokyo, Japan

29. On information and belief, automatic zigzag machines which are covered by the claims of said United States Letters Patent No. 2,832,302 are manufactured by a large number of foreign manufacturers unknown to Singer and are imported into and distributed and sold in the United States by a large number of persons unknown to Singer.

Typical Foreign Machines

30. On information and belief, there are a number of minor variations in the type and structure of household automatic zigzag sewing machines imported into the United States which infringe the claims of Singer's patent No. 2,832,302. The following, however, are believed to be typical and fairly representative of all infringing imports insofar as structure and appropriation of the invention of said patent No. 2,832,302 are concerned:

[fol. 2498] (a) The Pacesetter manufactured by Nippon Sewing Machine Manufacturing Company, Ltd. of Japan and distributed in the United Sates by Brother International Corporation of New York.

(b) The Select-O-Matic, also manufactured by the said Nippon Sewing Machine Manufacturing Company, Ltd. and distributed by the said Brother Corporation as above.

(c) The Sanshin machines manufactured in Japan by Sanshin Sewing Machine Company, Ltd. and distributed in the United States under various trade names, including, among other distributors, Gimbel's Department Store, New York, New York.

Pending Litigation

31. On May 20, 1958, Singer filed suit for infringement of said patent No. 2,832,302 in the United States District Court for the Southern District of New York against Brother International Corporation, an importer and distributor of automatic zigzag machines from Japan. A copy of said complaint and the amended answer and counterclaim filed by Brother International Corporation on August 11, 1958, are attached hereto as Exhibits 3-A and 3-B, respectively.

32. A second suit for infringement of said patent was filed on September 10, 1958, in the United States District Court, Western District of South Carolina, against John S. Landers and Willie M. Landers, doing business as Sewing Machine Exchange. This suit involved a machine made in Japan by Sanshin Sewing Machine Company, Ltd. and sold in the United States under the brand name Universal. A copy of the complaint filed in said action together with

a copy of the consent decree entered therein on November 25, 1958, are attached hereto as Exhibits 4-A and 4-B, respectively.

[fol. 2499] 33. A third suit for infringement of said patent was filed on December 2, 1958, in the United States District Court for the Eastern District of South Carolina, Civil Action No. AC-241 against Alco Appliance Distributing Company. This suit involved the same Japanese-made Sanshin machine noted in Paragraph 32 above, but in the present case, it is sold under the brand name Fleetwood. A copy of said complaint is attached hereto as Exhibit 5.

No Adequate Legal Remedy

34. Singer is actively seeking to enforce its patent rights in courts of law. The remedy available therein, however, is wholly inadequate to meet the situation herein disclosed. Federal courts face the biggest backlog in their history and, with the greatest expedition, it seems impossible to bring a case to trial in any Federal District Court at an early date. The multiplicity of suits required to proceed against each and every presently known importer in many diverse jurisdictions throughout the United States, not to mention the insuperable difficulty of discovering the many unknown importers, accents the difficulties which confront Singer in pursuing its remedy in the courts. An injunction once obtained, too, may prove inadequate as the foreign manufacturer or exporter has only to select new agents or distributors for its product to make the road of injunctive relief in the courts an endless and fruitless one.

Danger to Domestic Industry

35. The sharply increasing volume of infringing imports of said automatic zigzag machines and the low prices at which such products are sold and offered for sale throughout the United States will result in curtailment and possible cessation of manufacturing in the United States with [fol. 2500] consequent heavy loss of employment and capital investment, unless early and effective relief be granted.

36. Effective relief is not possible in the courts of law. Section 337, as interpreted and applied by the Commission

and the courts, affords the only remedy available and application of that Section is vital to continuance of the domestic industry.

Wherefore, Singer prays:

1—That the United States Tariff Commission institute an immediate investigation for the purposes of Section 337, Tariff Act of 1930, as amended, of unfair methods of competition and unfair acts in the importation and sale in the United States of household automatic zigzag sewing machines, and parts thereof.

2—That the United States Tariff Commission submit an immediate report to the President recommending that pursuant to the provisions of subdivision (f) of said Section 337, the President forbid entry, pending completion of an investigation by the Commission of household automatic zigzag sewing machines and parts thereof which embody the inventions and infringe the claims of United States patent No. 2,832,302.

3—That the Commission order a public hearing herein at the earliest practicable date.

4—That after completion of its investigation the Commission transmit its final findings to the President recommending that household automatic zigzag sewing machines and parts thereof, covered by the claims of said United States patent No. 2,832,302 can be excluded from entry into the United States for the term of said patent.

[fols. 2501-2573] Respectfully, The Singer Manufacturing Company, 149 Broadway, New York, New York, By Donald P. Kircher, President.

Barnes, Richardson & Colburn, 25 Broadway, New York New York, By: J. Bradley Colburn.

Brumbaugh, Free, Graves & Donohue, 90 Broad Street, New York New York, By: Granville M. Brumbaugh,

STATE OF NEW YORK,
County of New York, ss:

On this 8th day of January, 1959, before me personally appeared Donald P. Kircher, to me known to be the President of The Singer Manufacturing Company, who being duly sworn, stated that he has read the foregoing complaint and knows the contents thereof and that the facts alleged therein are known by him to be true, except where alleged on information and belief, and that as to such facts he believes them to be true.

Margaret K. Clark, Notary Public.

Margaret K. Clark, Notary Public, State of New York.
Qualified in New York County, No. 31-5709900.
Term expires March 30, 1960.

[fol. 2574] IN UNITED STATES DISTRICT COURT

EXHIBIT S-17

During the period from January 1957 to December 1959, the following United States companie have engaged in importing, assembling and/or distributing machine-carried multiple cam replaceable cam, and/or manual zigzag sewing machines manufactured in Japan by the manu facturers indicated below:

Importers, Assemblers and/or Distributors	Machine-Carried Multiple Cam	Replaceable Cam	Manual
Balin Export Company	Sanshin		
Best Built (Bega Brothers)		Nishizawa Aichi Kogyo	Sanshin
Brother International	Nippon	Nippon	Nippon
Brother International of California	Nippon	Nippon	Nippon
Consolidated	Sankyo Seiki	Manufacturer Unknown	Sankyo Seiki
Fleetwood Industries	Sanshin	Sanshin Aichi Kogyo	
Free Sewing Machine Co.	Koyo Seiko	Riccar	Koyo Seiko
Gamble-Skogmo Stores	Nippon	Nippon	Nippon
Gimbels	Sanshin		Manufacturer Unknown Manufacturer Unknown
Goodyear Tire & Rubber Co.	Nippon	Nippon	Nippon
Macy's	Sanshin Kyokuto	Manufacturer Unknown Manufacturer Unknown	Sanshin Manufacturer Unknown Manufacturer Unknown
Modern Sewing Machine Co.	Kyokuto		Maruzen Aichi Kogyo Feather
Montgomery Ward & Co.		Nishizawa Happy	Nishizawa Happy Fuji Maruzen
Morse		Aichi Kogyo	Aichi Kogyo
New Home Sewing Machine Co.	Banshu Koyo Seiko	Osaka	Janome Koyo Seiko Manufacturer Unknown
Rockford Sewing Machine Co.		Nishizawa Happy	Nishizawa Happy Fuji Maruzen
Royal Sewing Machine Corp.		Aichi Kogyo Feather Nishizawa	Feather
Sears Roebuck & Co.		Maruzen	Maruzen
Sewing Machine Exchange of Philadelphia	Nippon	Nippon	Nippon
SKS Machine Co.	Sanshin	Sanshin Aichi Kogyo	
Standard Sewing Machine Co.	Sanshin Feather	Sanshin Aichi Kogyo	Sanshin Aichi Kogyo Matsushita

Importers, Assemblers and/or Distributors	Machine-Carried Multiple Cam	Replaceable Cam	Manual
Stradivaro	Sankyo Seiki	Aichi Kogyo	Minato
Transworld Industries	Feather		
			Manufacturer Unknown
W. T. Grant	Nippon	Nippon	Manufacturer Unknown
Western Auto Supply Co.	Nippon	Nippon	Nippon
White Sewing Machine Co.		Aichi Kogyo	Nippon
		Nishizawa	Aichi Kogyo
		Fuji	Janome
			Hosei

[fols. 2575-2579] IN UNITED STATES DISTRICT COURT

EXHIBIT S-18

Japanese Manufacturers Exporting Zigzag Sewing Machines to U.S.	Model Names: Machine-Carried Multiple Cam	Replaceable Cam	Manual
Aichi Kogyo (Toyota)		White Model 670	White Model 2137
		Universal TAZ	Universal Model MIN
		Stradivaro Model 95	Morse Fotomatic
		Fleetwood Model 289	New Morse Fotomatic
		Morse Duomatic	
		New Morse Duomatic	
		Royal Model No. 1000***	
		Best-Built Model 289	
		State Model 289	
Banshu	New Home Model 8033*		
Feather	Universal TViewer Model FSZ 120***	Royal Model 770	Modern Model 130
			Royal Model 666 PERF
Fuji (Rhythm)		White Model 673	Ward's Zigzag Model 788
Fukoku	Vogue Stitch Model 88***		
Happy		Signature 23 Cams Automatic	Signature De Luxe Zigzag
		Signature 7 Cams Automatic	
Hosei			
Janome			White Model 265
			White Model 671
			White Zigzag
Koyo Seiko	Free-Westinghouse Model 803A*		New Home Model 370
			Free-Westinghouse Model 603
Kyukoto (Eastern)	Modern Model 116**		New Home Model 6033
	Vogue Stitch Model D**		
	Alden's Cam 3-in-1**		

Japanese Manufacturers Exporting Zigzag Sewing Machines to U.S.	Model Names: Machine-Carried Multiple Cam	Replaceable Cam	Manual
Maruzen		Kenmore Model E Kenmore Model F Kenmore Tri-Span 88	Challenge Zigzag Kenmore C Macy's Automatic Zigzag
Matsushita			Universal Super Zigzag
Minato			Stradivaro Model 125
Nippon	Selectomatic 90* Super Selectomatic 100* Wizard or Selectomatic 150* Pacesetter 200*	Brother Galaxie 230	Riviera 110 Electra 140 Flairmatic 190 Super Flairmatic 190B Customatic 240
Nishizawa		Signature 16 Cams Automatic Best-Built Model 130 State Model 130 Royal Model 775 White Model 672	Signature Model URR 789A. Serial 55X
Osaka		New Home Model 12033	
Riccar		Free-Westinghouse Model 803	
Sankyo Seiki	Consolidated Sewmor 740** #		Sewmor Model 707#
	Consolidated Sewmor 770**1#		Style 900
	Consolidated Sewmor 990**1#		
Sanshin	Gimbel's Single Dial Model*	Universal Semi-Automatic	Macy's Zigzag
	Fleetwood 958*	Fleetwood Model 400	Seam Master Z
	Universal Single Dial*		Sanshin Zigzag
	Universal Two-Selector Handle Model*		

* Infringes Gegauf Patent No. 2,832,302.
** Does not infringe Gegauf Patent No. 2,832,302.
**1 Does not infringe Gegauf Patent No. 2,832,302 since end of 1958.
**2 Infringes Johnson Patent No. 2,862,468 and Perla Patent No. 2,810,360.
*** This Royal machine is available with the following additional trademarks: Baldwin, Edison, Vigetti
# All machine-carried multiple cam Sewmor machines are available under the following additional trademarks: Viscount, Belair.

[fol. 2580] IN UNITED STATES DISTRICT COURT

EXHIBIT S-20

During the period from January 1957 to December 1959 the following United States companies have engaged in importing, assembling and/or distributing machine-carried multiple cam, replaceable cam, and/or manual zigzag sewing machines manufactured in Europe by the manufacturers indicated below:

Importers, Assemblers and/or Distributors	Machine-Carried Multiple Cam	Replaceable Cam	Manual
A B C Sewing Machine Co.	Phoenix		
A. C. Weber & Co., Inc.	Pfaff		Pfaff
A. E. Dufenhurst Co.		Anker	
Adler Industries Inc.		Adler	Adler
American Anker Co.		Anker	
Arrow Products, Inc.			Lada 132
Artophone International Corp.	Phoenix		
B & B Distributors	Pfaff		Pfaff
Bell Portable Sewing Mach. Corp.	Messerschmitt		
Belvedere—Adler Industries		Adler	Adler
Belvedere Sales Co.		Adler	Adler
Bernina Sewing Machine Co.	Gegauf		
Consolidated Sewing Machine Corp.	Husqvarna		
Elna Sewing Machine Co.		Tavaro	Tavaro
Free Sewing Machine Co.	Borletti		
Gertz		Necchi, Tavaro	
Gimbels	Pfaff		
Gramatan Sewing Machine Co., Inc.	Pfaff	Necchi	Pfaff
Hahne & Co. Dept. Store	Gritzner-Kayser	Gritzner-Kayser	
Husqvarna of Sweden, Inc.	Husqvarna		Husqvarna
Jacob Goldfarb & Co., Inc.		Viscontea	
Leiner's Sewing Machine & Vacuum Cleaners		Tavaro	Tavaro
Lit Bros. Dept. Stores	Gritzner-Kayser		
Melrose Sewing Machine Co.		Adler	
Modern Sewing Machine Co.		Fridor	
Necchi Sewing Machine Sales Corp.		Necchi	Necchi
New-Home Sewing Machine Co.	Borletti		
Pfaff American Sales Corp.	Pfaff		Pfaff
Sears, Roebuck & Co.	Gritzner-Kayser	Gritzner-Kayser	
Sewing Machine Center		Anker	
Sewing Machine Exchange, Inc.		Adler	
Sirota Marion Shipping Co.	Vigorelli		
Transworld Equipment Corp.			Lada
Turissa Distributing Co.	Turissa		Turissa
White Sewing Machine Corp.	Gritzner-Kayser		

[fol. 2581] IN UNITED STATES DISTRICT COURT

EXHIBIT S-21

European Manufacturers Exporting Zigzag Sewing Machines to the U.S.	Model Names		
	Machine-Carried Multiple Cam	Replaceable Cam	Manual
Czechoslovakia:			
Lada			Lada 132
Holland:			
N. V. Fridor Fabrieken		Fridor Automatic	
Italy:			
Arnaldo Vigorelli S.p.A.	Robot		
Fratelli Borletti S.p.A.	Free Westinghouse 1203 New Home Model 1102		
Viscontea Battaglia S.p.A.		Visnova-matic	
Vittorio Necchi S.p.A.		Supernova Supernova Ultra Mark 2 Necchi Nora	Necchi Miranda
Sweden:			
Husqvarna Vapenfabrik A. G.	Viking 21A Viking 51		Class 19
Switzerland:			
Fritz-Gegauf A. G.	Record Favorit		
Tavaro, S. A.		Elna Automatic Elna/Supermatic Elna Plana Supermatic Elna Plana Automatic Electra	Elna Zigzag
Turissa Nahmaschinenfabrik A. G.	Novomatic		Turissa
West Germany:			
Anker-Werke A. G.		Anker FZ Automatic Anker DZK Automatic	
G. M. Pfaff A. G.	Model 260 (formerly Model 230) Model 360 (formerly Model 332)		Model 130 Model 229 Model 259 Model 360-6
Gritzner-Kayser A. G.	White Model 666* Lady Kenmore	White FZ Automatic Kenmore Automatic White Domestic Imperial Automatic 941	
Kochs Adlernahmaschinen Werke A. G.		Adlermatic 189A Victoria 589A Adler 789A Adlermatic 589A	Adler 189 Adler 200
Messerschmitt A. G.	Bell Messerschmitt Model 502* Bell Messerschmitt Model 603N*		
Phoenix-Nahmaschinen A. G.	Phoenix Automatic Model 283		

* No imports after 1958

EXHIBIT S-31

FOR THE YEAR OF 1957
FROM JANUARY TO DECEMBER

昭和33年1月～12月 家庭用ミシン輸出承認実績表

LIST OF APPROVED EXPORTS OF FAMILY SEWING-MACHINES

(MACHINERY EXPORTS)

DESTINATION	HEAD ONLY					TREADLE		HAND		ELECTRIC		STRAIGHT MACHINE HEAD ONLY				ZIG-ZAG		PARTS	
				UNITS	VALUE	UNITS	VALUE	UNITS	VALUE	UNITS	VALUE	SEMI ZIG	SEMI STRAIGHT AUTO	FULL ZIG	FULL STRAIGHT AUTO	UNITS	VALUE	VALUE	UNITS
KOREA	2,780	745	2,525	6,050	148,801	108	3,852	26	525	5	219	210	—	—	30	240	9,285	—	—	74,805	6,424
RYUKYU	54	54	—	88	2,519	5,883	148,067	—	—	95	4,311	—	—	3	12	15	1,119	172	12,401	31,560	4,201
HONG KONG	37,407	3,201	—	40,608	644,068	626	19,905	107	2,457	—	—	11	21	12	34	78	3,963	—	—	322,750	41,419
VIET NAM	5,910	—	150	5,650	91,300	15,090	545,801	—	—	10	420	—	—	—	—	—	—	—	—	102,608	20,750
THAILAND	7	—	—	7	113	11,874	418,544	—	—	1	36	—	2	20	11	33	1,781	442	28,247	12,372	12,357
PHILIPPINES	718	—	—	718	10,208	9,523	338,577	608	14,110	8	296	—	—	—	—	—	—	18	1,108	25,267	10,875
SINGAPORE	45,414	260	—	45,674	715,568	10,069	348,077	830	23,610	45	1,594	5	4	—	—	9	356	12	795	663,419	54,637
INDONESIA	2,576	2,585	15	5,176	111,251	13,928	800,179	134	5,178	90	3,928	—	—	—	12	12	965	66	4,477	443,605	19,406
BURMA	74,006	—	—	74,006	1,057,051	40	1,385	—	—	—	—	—	—	575	—	575	25,300	—	—	1,118,915	74,621
INDIA	34	—	—	34	568	9,745	352,226	—	—	—	—	—	—	—	—	—	—	26	1,948	130,225	9,805
PAKISTAN	4,501	—	—	4,501	74,561	448	17,648	2	47	1	56	—	—	35	—	35	1,680	—	—	109,365	4,987
CEYLON	2,449	144	—	2,612	40,354	55	1,885	24	514	—	—	—	—	6	—	6	284	—	—	240,601	2,696
IRAN	2	—	1	3	58	1,728	62,270	198	4,457	—	—	—	—	—	3	3	252	4	289	2,583	1,936
IRAQ	3,756	170	—	3,926	57,328	1,995	68,826	21,985	505,029	233	8,304	—	—	—	—	—	—	2	103	28,176	28,121
ADEN	1,177	—	—	1,177	17,896	4,315	146,548	1,652	38,018	2	51	—	—	2	1	3	142	29	1,983	22,899	7,178
SAUDI ARABIA	1	—	—	1	16	1,045	33,537	1,541	36,946	105	3,336	—	—	—	3	3	142	11	669	3,781	2,706
JORDAN	—	—	—	—	—	660	23,095	3,752	81,731	—	—	—	—	—	—	—	—	—	—	1,796	4,392
SYRIA	484	—	—	686	10,618	3,672	128,380	657	22,715	—	—	—	—	—	1	1	54	6	385	11,907	5,022
LEBANON	715	—	475	1,490	22,254	2,957	101,709	557	8,432	18	881	—	—	—	—	—	—	2	107	25,945	4,804
OTHERS	2,797	93	127	3,915	57,166	5,140	175,254	660	14,118	8	421	2	4	7	22	34	1,709	15	1,109	21,028	9,772
	2,807	9	—	2,876	45,164	9,175	322,635	3,269	74,576	68	2,405	1	12	57	92	162	9,221	172	10,918	129,150	13,720
NETHERLANDS	4,214	1,426	30	5,672	97,351	—	—	—	—	—	—	24	5	86	1	166	6,564	—	—	44,675	7,058
BELGIUM	3,780	3,615	58	6,456	155,460	80	2,950	1	4	65	2,532	1,405	190	1,154	344	3,071	122,500	10	590	9,735	9,686
W. GERMANY	14,052	2,254	26	17,312	279,266	41	701	—	—	1	36	11	16	27	87	141	6,939	20	1,900	7,711	11,515
AUSTRIA	8,446	2,259	86	10,991	174,318	4,750	163,854	621	14,748	96	3,945	102	11	113	72	303	14,138	218	14,770	12,817	16,959
U.S.A.	326,188	282,141	71,082	679,411	11,601,150	317	11,407	—	—	8	299	113,636	56,805	3,485	58,705	232,631	8,737,386	1,925	135,290	294,478	93,292
CANADA	21,149	9,170	1,851	32,170	521,232	—	—	—	—	—	—	920	745	959	1,111	3,715	176,811	100	7,450	81,447	40,980
MEXICO	44,127	244	120	44,891	716,885	1,856	61,962	16	372	65	1,785	291	—	26	102	382	16,216	12	898	194,362	15,402
GUATEMALA	315	1	—	316	5,088	4,112	146,370	15	342	66	2,426	—	—	—	—	—	—	41	2,824	4,182	4,438
HONDURAS	20	—	54	74	1,029	2,568	91,734	79	1,747	7	282	—	—	—	—	—	—	42	2,586	7,087	2,770
SALVADOR	15	—	—	15	254	4,595	159,606	22	498	—	—	—	—	—	—	—	—	7	463	6,044	4,689
NICARAGUA	175	—	5	180	2,983	1,715	61,687	—	—	—	—	—	—	—	—	—	—	20	1,503	4,687	1,915
COSTA RICA	190	21	—	211	3,885	3,268	116,839	18	453	—	—	—	—	6	—	6	486	114	7,987	9,352	7,617
PANAMA	41	1	—	42	659	558	19,820	701	15,317	7	328	—	—	—	12	12	1,081	13	946	1,794	1,333
COLOMBIA	11,979	200	—	12,179	184,197	12	419	30	675	—	—	—	30	—	3	33	678	—	—	20,897	12,284
VENEZUELA	596	5	2	603	9,257	12,146	445,271	2,995	68,878	79	3,185	—	—	—	49	49	2,398	194	15,943	45,217	7,059
ECUADOR	6,040	515	16	6,581	102,521	221	5,645	171	4,018	5	235	—	—	3	35	38	2,282	—	—	23,661	3,018
PERU	5,281	210	142	5,633	86,997	22,725	811,959	10,717	246,727	20	669	—	—	—	—	8	314	199	14,673	89,319	59,532
CHILE	619	44	20	683	12,059	55,859	2,008,261	1,094	26,842	1,508	67,654	—	—	—	1	1	6	403	29,219	52,245	59,570
BRAZIL	9,050	—	—	9,050	128,125	—	—	—	—	—	—	—	—	542	216	758	45,012	—	—	234,246	9,778
URUGUAY	1,910	—	20	1,930	42,531	5,527	195,910	20	914	170	7,307	—	—	—	1	1	54	1	59	2,945	7,639
OTHERS	2,412	240	40	2,692	40,026	15,055	534,850	892	21,117	172	6,551	—	—	—	—	—	—	92	6,506	66,295	18,915
CUBA	5,401	120	—	5,521	111,469	18,624	646,888	—	—	47	2,162	—	—	—	62	62	4,624	121	9,125	39,475	24,574
DOMINICAN REP.	25	—	—	25	550	2,481	82,381	189	4,536	21	765	—	—	—	3	3	210	26	1,747	2,962	2,757
PUERTO RICO	24	3	—	27	444	858	30,757	10	210	6	219	—	—	—	7	7	286	2	140	947	911
OTHERS	108	10	—	118	1,863	3,487	125,610	1,119	26,340	176	5,969	—	1	—	2	3	175	51	1,848	9,118	4,944
EGYPT	3,329	84	39	3,452	52,528	1,575	54,724	90	2,077	5	168	—	1	2	4	7	261	14	860	26,758	5,196
NIGERIA	366	18	4	388	5,837	2,670	92,199	869	20,430	10	374	17	—	20	4	41	2,119	76	4,998	22,677	4,154
LIBERIA	674	7	103	784	11,750	2,370	80,869	8,015	182,847	415	9,586	11,335	—	64	12	11,411	349,047	407	21,329	102,438	5,460
OTHERS	147	3	40	190	3,015	3,815	135,285	2,040	48,414	41	1,525	1,015	—	21	11	1,057	33,188	167	11,423	18,065	2,910
AUSTRALIA	4,201	5,144	871	10,216	192,020	57	2,095	133	3,277	38	1,325	160	40	1	1,803	2,004	111,617	4	290	8,128	4,125
NEW ZEALAND	—	—	—	—	—	—	—	15	396	14	504	12	—	2	—	12	606	—	—	784	441
OTHERS	7,084	719	78	7,881	125,571	125	4,850	408	10,110	137	3,896	44	5	1	154	182	9,064	1,259	68,371	68,814	9,992
計	671,565	316,916	78,670	1067,149	17,752,705	277,443	9,848,101	66,060	1,581,913	5,862	150,882	129,228	57,869	7,244	33,042	257,383	9,694,176	6,522	431,068	5,184,041	1,678,419

EXHIBIT S-31

昭和32年1月—12月 家庭用ミシン輸出承認実績表

LIST OF APPROVED EXPORTS OF FAMILY SEWING-MACHINES

(機械情報産業局重工業品輸出課調)
(MACHINERY EXPORT SEC., HEAVY INDUSTRY BUREAU, MITI)

	TREADLE		HAND		ELECTRIC		MACHINE (HEAD ONLY)						ZIGZAG		PARTS	GRAND TOTAL		NO. OF LICENSE	DESTINATION	
VALUE	UNITS	VALUE	UNITS	VALUE	UNITS	VALUE	SEMI-ZIG	SEMI-AUTO	FULL-ZIG	FULL-AUTO	UNITS	VALUE	UNITS	VALUE	VALUE	UNITS	VALUE			
148,801	103	3,852	26	525	5	219	210	—	—	30	240	9,285	—	—	74,805	6,424	257,487	114	KOREA	ASIA
2,519	3,833	143,067	—	—	93	4,311	—	—	3	12	15	1,119	172	12,401	31,560	4,201	194,977	522	RYUKYU	
644,[illegible]8	626	19,905	107	2,457	—	—	11	21	12	34	78	3,963	—	—	322,750	41,419	993,125	586	HONG KONG	
91,300	15,090	545,801	—	—	10	420	—	—	—	—	—	—	—	—	102,608	20,750	740,129	111	VIETNAM	T
113	11,874	418,544	—	—	1	36	—	2	20	11	33	1,781	442	28,247	12,372	12,357	461,093	205	THAILAND	
10,208	9,523	338,577	608	14,110	8	296	—	—	—	—	—	—	18	1,108	25,267	10,875	389,596	223	MALAYA	
715,368	10,069	348,077	830	23,610	43	1,594	5	4	—	—	9	356	12	795	663,419	54,637	1,753,249	401	SINGAPORE	
111,231	13,928	500,179	134	3,118	90	3,928	—	—	—	12	12	965	66	4,477	445,605	19,406	1,067,523	206	PHILIPPINE	
057,031	40	1,385	—	—	—	—	—	—	575	—	575	25,300	—	—	1,118,915	74,621	2,202,631	415	INDONESIA	
555	9,745	352,226	—	—	—	—	—	—	—	—	—	—	26	1,948	130,225	9,805	484,952	99	BURMA	
74,56[illegible]	448	17,648	2	47	1	36	—	—	35	—	35	1,680	—	—	109,365	4,987	205,337	210	INDIA	
40,354	53	1,885	24	514	—	—	—	—	6	—	6	284	—	—	240,601	2,696	283,658	345	PAKISTAN	
58	1,728	62,270	198	4,457	—	—	—	—	—	3	3	252	4	289	2,583	1,936	69,869	60	CEYLON	
57,328	1,995	68,826	21,985	505,055	233	8,304	—	—	—	—	—	—	2	103	28,176	28,121	667,762	188	IRAN	
17,896	4,315	146,548	1,652	38,018	2	51	—	—	2	1	3	142	29	1,985	22,899	7,178	227,527	132	IRAQ	
16	1,045	33,537	1,541	36,996	105	3,336	—	—	—	3	3	142	11	619	3,781	2,706	78,457	103	TAIWAN	
—	660	23,093	3,732	81,751	—	—	—	—	—	—	—	—	—	—	1,796	4,392	106,620	44	SAUDI ARABIA	
10,618	3,672	128,380	657	22,715	—	—	—	—	—	1	1	54	6	385	11,907	5,022	174,049	98	JORDAN	T
22,254	2,957	101,709	357	8,422	18	881	—	—	—	—	—	—	2	107	25,945	4,824	157,318	70	SYRIA	
57,166	5,140	175,254	660	14,148	8	321	2	3	7	22	34	1,709	15	1,109	21,028	9,772	270,770	166	LEBANON	
43,164	9,173	322,635	3,269	74,516	68	2,415	1	12	57	92	162	9,221	172	10,918	139,150	35,720	992,039	340	OTHERS	
97,351	—	—	—	—	—	—	74	5	86	1	166	6,564	—	—	44,675	7,038	348,588	135	NETHERLAND	西
133,460	80	2,950	1	4	65	2,532	1,405	190	1,154	344	3,071	122,500	10	590	9,755	9,680	477,389	122	BELGIUM	ヨ
279,266	41	701	—	—	1	36	11	16	27	87	141	6,939	20	1,900	7,711	11,515	296,553	198	W. GERMANY	ー
174,318	4,730	163,854	621	14,748	96	3,945	107	11	113	72	303	14,138	218	14,770	12,817	16,959	398,690	197	OTHERS	ロ
1,601,150	317	11,407	—	—	8	299	113,646	56,805	3,485	58,705	232,631	8,737,186	1,925	135,290	294,478	924,292	21,781,210	1,527	U.S.A.	北
521,232	—	—	—	—	—	—	920	745	939	1,111	3,715	176,801	100	7,750	81,427	42,980	769,050	215	CANADA	米
716,883	1,856	61,962	16	372	65	1,783	251	—	96	105	382	16,216	12	818	295,362	31,202	1,121,906	201	MEXICO	
3,088	4,112	146,370	13	342	66	3,426	—	—	—	—	—	—	41	2,826	4,082	4,458	162,144	102	GUATEMALA	中
1,029	2,568	91,734	79	1,747	7	282	—	—	—	—	—	—	42	2,586	3,067	3,770	101,445	98	HONDURAS	
254	4,595	159,606	22	498	—	—	—	—	—	—	—	—	7	463	6,044	4,639	166,863	62	SALVADOR	
2,983	1,715	61,687	—	—	—	—	—	—	—	—	—	—	20	1,503	4,687	1,915	70,861	59	NICARAGUA	
3,885	3,268	116,859	18	455	—	—	—	—	6	—	6	448	114	7,987	2,352	5,617	131,924	99	COSTA RICA	
659	558	19,820	701	15,317	7	328	—	—	—	12	12	1,081	13	946	1,794	1,333	39,941	79	PANAMA	M.O. & SOUTH
184,197	12	419	30	675	—	—	—	10	1	2	13	675	—	—	20,897	12,234	205,867	34	COLUMBIA	AMERICA
9,257	12,146	445,271	2,995	68,878	79	3,185	1	—	—	29	43	2,398	199	15,943	43,011	4,052	87,909	70	VENEZUELA	
102,521	221	5,645	171	4,038	5	235	—	—	1	25	31	1,282	—	—	73,681	1,018	69,294	113	ECUADOR	
86,997	22,725	811,959	10,717	246,727	20	669	8	—	—	—	8	74	199	14,675	69,419	59,706	1,350,724	435	PERU	
12,059	55,859	2,008,261	1,094	26,892	1,508	67,654	—	—	—	1	1	1.6	420	29,259	52,345	59,570	96,524	139	CHILE	
128,125	—	—	—	—	—	—	—	—	532	216	748	45,012	—	—	236,236	9,778	9,403	75	BRAZIL	
42,531	5,527	195,910	20	914	170	7,307	—	—	—	1	1	5	1	59	2,845	7,639	49,166	101	URUGUAY	米
42,026	15,056	534,850	892	21,112	172	6,551	—	—	—	—	—	33	92	6,506	66,295	18,915	677,479	167	OTHERS	
111,469	18,624	646,888	—	—	47	2,162	—	—	—	62	62	2,624	120	9,125	29,475	23,574	1,[illegible]42	201	CUBA	西
350	2,481	82,381	189	4,596	21	765	—	—	—	5	5	224	26	2,747	2,962	2,757	93,014	78	DOMINICAN REP.	インド
444	858	30,757	10	210	6	219	—	—	—	7	7	286	2	140	947	910	32,[illegible]29	63	PUERTO RICO	諸島
1,863	3,487	125,410	1,119	26,350	176	5,969	—	1	—	2	3	175	21	1,848	9,118	4,974	763	143	OTHERS	他
52,528	1,573	54,724	90	2,017	5	168	—	1	24	4	61	2,084	14	860	26,738	5,195	92,159	62	EGYPT	
5,837	2,670	92,199	869	20,430	10	374	17	—	20	4	41	2,159	76	4,998	22,677	4,[illegible]54	158,674	187	NIGERIA	AFRICA
11,730	2,370	80,869	8,015	182,847	413	9,585	11,335	—	64	12	11,411	349,047	407	21,328	103,448	3,401	5,854	525	UNDES. AFRICA	
3,015	3,815	135,285	2,040	48,414	41	1,525	1,015	—	51	11	1,057	33,168	167	11,423	18,063	7,510	2[illegible]892	255	OTHERS	他
192,020	57	2,095	133	3,277	38	1,325	160	40	1	1,823	2,024	111,617	4	290	8,[illegible]28	[illegible]472	[illegible]8,622	121	AUSTRALIA	
—	—	—	15	396	14	504	12	—	—	—	12	606	—	—	784	41	1,890	6	HAWAII	OCEANIA
125,571	125	4,850	408	10,110	137	3,896	44	5	—	154	182	9,064	1,259	68,371	68,814	9,992	290,626	150	OTHERS	他
17,752,705	277,443	9,848,101	66,060	1,581,913	8,862	150,882	129,228	57,869	7,244	63,042	257,383	9,694,176	6,522	431,068	5,184,041	1,678,419	44,592,886	10,732	TO TAL	

Exhibit S-31

EXHIBIT S-32

For the year of 1958
Jan. January to December

昭和33年1月～12月家庭用ミシン輸出承認実績表
LIST OF APPROVED EXPORTS OF FAMILY SEWING-MACHINES

(MA

地域	仕向地 Destination	頭 Head Only					足 Treadle		手 Hand		電 Electric		Zig-Zag Machine 以上						Zigzag Compl	
		数量 Quantity		その他 other	計 Total	価額 Value $	数量 Unit	価額 Value $	数量 Unit	価額 Value $	数量 Unit	価額 Value $	Semi Zig.	Semi Auto.	Full Zig.	Full Auto.	Total	価額 Value $	数量 Units	価額 Value $
	Korea 国	475	4,226	—	4,701	100,053	396	14,488	7	192	1	34	1,518	—	—	23	1,541	52,502	—	—
	琉球 Ryukyu	12	—	—	12	185	3,391	125,800	—	—	86	4,415	—	—	2	—	2	86	165	11,809
	Hongkong	26,115	1,497	130	27,742	456,771	315	11,287	10	226	—	—	—	6	—	33	39	1,326	10	771
T	Viet Nam	10,350	—	—	10,350	167,015	200	6,901	—	—	—	—	—	—	—	—	—	—	—	—
	Thailand	—	8,110	—	8,110	252,791	13,470	468,659	14	327	1	35	10	—	3	4	17	678	265	16,338
	Malaya	147	5	—	152	2,586	6,656	230,198	592	13,368	25	900	2	—	—	—	4	157	7	250
	Singapore	22,054	75	—	22,129	474,959	4,534	157,671	420	9,446	27	958	—	12	4	—	16	614	8	519
	Philippine	9,057	9,208	50	18,315	345,900	876	30,921	40	900	—	—	1	—	—	251	252	14,607	3	223
	Indonesia	4,825	—	—	4,825	69,263	—	—	—	—	—	—	—	—	—	—	—	—	—	—
	Burma ヤ	—	—	—	—	—	732	25,212	—	—	4	176	—	—	—	—	—	—	—	—
	India ド	4	—	—	4	56	52	1,061	6	132	—	—	—	—	—	8	8	353	1	266
	Pakistan	824	155	—	979	15,724	89	2,342	14	311	6	172	—	—	—	—	—	—	—	—
	Ceylon ン	—	—	—	—	—	2,492	91,486	74	1,780	11	454	—	—	—	7	7	392	24	1,897
	Iran ン	4,156	11	1	4,168	62,663	5,142	146,486	67,145	1,518,040	265	6,118	4	—	4	—	8	311	—	—
	Iraq ク	255	—	—	255	3,623	7,198	239,122	1,269	28,342	11	415	2	—	1	—	3	116	—	—
	Sudan ン	94	8	—	102	1,832	2,450	85,529	1,496	34,259	55	1,347	12	—	1	9	22	906	17	967
	Sumatra	215	5	620	840	11,077	1,716	58,918	8,051	179,761	—	—	—	—	—	—	—	—	5	258
T	Jordan	135	1	19	155	2,598	5,162	170,152	302	6,765	2	64	—	—	—	—	—	—	4	225
	Syria ア	2,236	—	734	2,970	43,629	4,883	162,800	287	6,219	—	—	—	—	—	—	—	—	—	—
	Lebanon	520	9	380	909	13,197	3,121	107,336	481	10,678	5	98	1	—	1	8	10	509	32	2,098
	Others 他	3,978	55	—	4,033	58,735	10,014	359,222	4,135	91,500	51	1,161	98	25	55	55	213	9,915	252	15,656
	Holland ダ	5,890	1,944	329	8,163	136,638	—	—	4	69	101	1,[illegible]	1,459	160	568	3	1,980	69,353	—	—
	Belgium ベ	3,943	4,740	6	8,689	144,616	10	450	50	1,256	6	388	3,258	464	1,687	1,010	6,451	248,634	8	501
	W. Germany	28,121	3,044	134	31,299	486,786	10	349	10	225	17	722	755	—	559	1	1,415	54,442	—	—
	Others 他	14,985	4,877	966	20,826	324,457	7,635	264,496	1,268	29,065	61	2,097	5,311	469	97	47	5,784	181,389	243	15,878
	U. S. A. ス	265,180	324,912	51,018	641,110	11,012,742	276	9,902	20	774	2,001	61,367	72,030	37,256	2,241	135	388,431	12,156,510	178	6,365
	Canada ダ	25,690	19,271	7,703	52,664	886,608	1	33	—	—	525	9,800	2,322	5,315	100	60	21,797	794,034	14	1,527
	Mexico コ	29,922	1,003	—	30,925	448,889	1,909	68,912	12	265	4	110	547	249	3	91	630	25,721	289	12,672
	Guatemala	143	—	—	143	2,131	4,329	152,190	35	844	—	—	20	—	—	—	20	650	88	4,670
	Honduras	10	—	18	28	388	3,986	141,317	146	3,107	2	53	—	—	—	—	—	—	114	6,101
	Salvador	—	—	—	—	—	2,951	105,511	12	270	—	91	—	—	—	—	—	—	25	1,323
	Nicaragua	380	—	30	410	6,617	4,087	143,609	—	—	—	—	5	—	8	6	19	870	40	2,942
	Costa Rica	489	—	—	489	7,324	4,230	151,635	176	4,115	2	106	10	—	—	5	15	901	207	8,126
	Panama	106	12	—	118	1,780	1,617	58,804	1,660	37,761	9	295	—	—	—	—	—	—	79	3,576
	Colombia	10,450	—	—	10,450	155,525	455	16,805	—	—	—	—	—	—	—	—	—	—	—	—
	Venezuela	305	144	—	447	7,807	16,626	599,535	3,385	75,545	57	2,[illegible]	5	1	8	66	78	4,[illegible]	410	31,[illegible]
	Ecuador	5,295	716	4	6,013	92,545	100	2,270	262	6,177	20	501	1	44	26	73	265	10,236	—	—
	Peru —	4,919	—	288	5,207	75,343	16,039	565,757	825	18,571	1	35	—	4	—	—	11	535	105	8,[illegible]37
	Chile —	411	45	—	456	6,947	5,231	136,148	162	5,655	30	1,[illegible]30	—	—	1	—	4	178	59	2,[illegible]77
	Brazil ル	6,454	—	—	6,454	93,583	—	—	—	—	—	—	50	342	48	441	881	45,963	23	1,461
	Uruguay	51	33	—	84	1,359	900	31,360	—	—	—	—	—	—	—	—	—	—	—	—
	Others 他	18,526	80	17	18,623	278,469	23,222	842,462	1,240	27,385	85	3,002	—	—	—	8	52	1,273	157	9,641
	Cuba — ス	1,178	640	—	1,818	30,808	11,666	404,694	540	11,[illegible]	25	1,[illegible]	—	—	—	29	29	1,[illegible]66	7	393
	Dominican	151	—	—	151	2,189	2,522	89,146	179	4,21[illegible]	1	53	1	7	1	—	9	396	51	3,[illegible]29
	Puerto Rico	78	14	—	92	1,496	625	22,472	15	341	5	655	—	4	—	10	14	717	1	59
	Others 他	156	500	—	656	12,265	2,843	100,[illegible]28	545	12,[illegible]84	15	385	—	—	—	5	5	162	56	2,824
	Egypt ト	780	40	—	820	11,758	520	17,066	10	226	—	—	—	—	—	—	—	—	10	644
	Nigeria	369	12	8	389	5,607	4,056	135,107	497	10,[illegible]13	5	2[illegible]5	—	—	—	—	31	1,550	118	7,750
	S. Africa	704	15	301	1,020	16,511	2,085	69,[illegible]57	1,[illegible]68	[illegible]	20	[illegible]171	[illegible]	[illegible]	68	336	25,566	844,482	1,[illegible]43	46,[illegible]54
	Others 他	1,828	103	—	1,931	28,735	5,861	197,[illegible]72	2,345	55,[illegible]28	11	[illegible]	[illegible]	[illegible]	29	23	2,141	72,900	252	15,[illegible]24
	Australia	12,181	6,082	39	18,302	309,780	126	4,444	172	4,[illegible]08	62	[illegible]	[illegible]	[illegible]	1	5	362	2,896	140,541	77	3,816
	Others 他	8,980	1,035	27	10,042	156,217	260	9,298	586	[illegible]20	[illegible]	[illegible]	[illegible]	[illegible]	1	—	1	15	728	468	26,727
	Total 計	533,121	392,627	62,822	988,570	16,828,555	197,123	6,884,548	109,426	2,471,999	5,558	167,905	249,588	96,825	7,056	57,266	410,735	14,743,702	4,905	293,782

EXHIBIT S-32

Singer Exhibit # 19

昭和33年1月～12月家庭用ミシン輸出承認実績表

LIST OF APPROVED EXPORTS OF FAMILY SEWING-MACHINES

(機械局重工業輸出課調)
(MACHINERY EXPORT SECTION, HEAVY INDUSTRY BUREAU, MITI.)

Head Only 本			Treadle 足		Hand 手		Electric 電		Zig-Zag Machine ジグザグ						Zigzag Compl. 同附属品		Parts 部分品	Grand Total		No. of License 件数	Destination 仕向地	
Units 台数	Value 価額		Units 台数	Value 価額	Units 台数	Value 価額	Units 台数	Value 価額	Semi-Auto. Zig.	Auto. Zig.	Full Zig.	Auto. Zig.	Total 計	Value 価額	Units 台数	Value 価額	Value 価額	Units 台数	Value 価額			
—	4,701	100,053	396	14,488	7	192	1	54	1,518	—	—	23	1,541	53,509			242,558	6,648	410,894	197	韓国	
—	12	185	3,391	125,800	—	—	86	4,413		—	2		2	86	165	11,809	26,847	3,656	169,132	244	琉球	
130	27,742	456,771	313	11,287	10	228	—	—	6	—	33	33	72	3,494	10	771	162,485	28,147	634,994	339	香港	
—	10,350	167,015	200	6,901	—	—	—	—	—	—	—	—	—	—			94,223	10,550	268,139	31	南ベトナム	ア
—	8,110	252,791	13,470	468,559	14	327	1	35	10	—	4	4	17	678	243	16,338	102,006	21,875	840,734	248	タイ	
—	152	2,586	6,656	250,198	592	15,368	25	900	2	—	2	—	4	157	7	250	15,143	7,432	262,602	222	マラヤ連邦	
—	22,129	474,959	4,584	157,671	420	9,446	27	958	—	13	4	—	16	610	8	519	450,737	27,134	996,970	262	シンガポール	
50	18,315	345,900	876	30,921	40	980	2	—	1	—	—	251	252	14,607	3	223	173,481	19,498	566,035	135	フィリッピン	
—	4,825	69,263	—	—	—	—	—	—	—	—	—	—	—	—	—	—	90,719	4,825	159,982	40	インドネシア	
—	—	—	732	25,212	—	—	4	176	—	—	—	—	—	—	—	—	25,468	736	50,856	21	ビルマ	
—	4	56	32	1,061	6	132	—	—	—	—	8		8	353	1	266	63,631	51	65,499	75	インド	ジ
—	979	15,724	89	2,342	14	311	6	172	—	—	—	—	—	—	—	—	169,508	1,088	188,057	253	パキスタン	
—	—	—	2,492	91,486	74	1,780	11	454	—	—	—	7	7	392	24	1,897	8,397	2,608	104,399	84	セイロン	
1	4,168	62,663	5,142	146,486	67,145	1,518,040	265	6,118	4	—	4		8	311			40,141	76,724	1,773,759	501	イラン	
—	256	3,623	7,198	239,122	1,269	28,342	11	415	2	—	1	—	3	116			6,121	8,736	277,739	137	イラク	
—	102	1,832	2,450	85,329	1,496	34,289	55	1,347	12	—	1	9	22	906	17	982	9,217	4,122	133,903	143	アデン	
620	840	11,077	1,716	58,918	8,051	179,761	—	—	—	—	—	—	—	—	5	258	10,043	10,612	260,057	109	サウジアラビア	
19	155	2,598	5,162	170,152	302	6,763	2	64	—	—	—	—	—	—	4	225	6,365	5,625	186,167	105	ヨルダン	ア
734	2,970	43,629	4,883	162,800	287	6,219	—	—	—	—	—	—	—	—	—	—	27,531	8,140	240,179	125	シリア	
380	902	15,197	3,121	107,336	481	10,678	3	98	1	—	1	8	10	509	32	2,098	10,708	4,556	144,624	110	レバノン	
—	4,055	58,735	10,014	359,222	4,158	91,500	51	1,161	98	25	56	55	245	9,915	252	15,656	149,069	18,676	685,258	449	その他	
529	8,165	136,638	—	—	4	69	101	1,742	1,459	164	58	3	1,980	69,553	—	—	50,334	10,248	257,963	166	ギランダ	ヨーロッパ
6	8,689	144,616	10	450	50	1,256	6	208	3,288	464	1,687	1,010	6,451	248,634	8	501	8,939	15,214	404,604	172	ベルギー	
134	31,299	486,786	10	349	10	225	19	722	735	—	659	1	1,415	54,442		—	4,901	32,751	547,425	198	西ドイツ	
966	20,826	324,457	7,635	264,496	1,248	29,065	61	2,397	5,311	467	57	47	5,784	181,389	245	15,878	34,975	35,867	852,335	320	その他	
51,018	441,110	11,012,742	226	9,902	20	774	2,001	66,367	22,080	87,256	2,201	135	338,431	12,196,510	78	6,565	403,636	981,916	23,654,996	1,928	アメリカ	北米
7,705	52,664	886,608	1	33	—	—	525	9,800	2,322	18,315	100	60	21,797	794,854	13	1,327	52,550	74,801	1,744,332	343	カナダ	
—	30,925	448,889	1,909	68,912	12	265	4	110	547	48	3	—	650	25,721	289	12,872	548,127	33,789	904,096	332	メキシコ	
—	145	2,131	4,329	152,190	35	844	—	—	20	—	—	—	20	650	88	4,670	5,740	4,615	166,225	72	グアテマラ	
18	28	588	3,986	141,317	148	5,107	9	53	—	—	—	—	—	—	114	6,101	3,176	4,280	154,142	108	ホンジュラス	中
—	—	—	2,931	103,511	12	270	—	91	—	—	—	—	—	—	25	1,323	7,516	2,970	112,711	47	サルバドル	
30	410	6,617	4,087	143,609	—	—	—	—	5	—	8	6	19	820	41	2,942	5,643	4,556	159,681	94	ニカラガ	
—	489	7,324	4,230	151,635	176	4,115	2	106	10	—	—	5	15	901	107	8,126	8,741	5,021	180,951	124	コスタリカ	
—	118	1,780	1,617	58,884	1,660	37,761	9	295	—	—	—	—	—	—	19	3,376	2,345	3,488	104,579	58	パナマ	
—	10,450	155,525	455	16,805	—	—	—	—	—	—	—	—	—	—	—	—	46,923	10,935	219,253	27	コロンビア	南
—	447	7,807	16,626	599,535	3,383	76,563	8	210	1	1	3	66	78	4,765	410	31,015	49,178	21,013	772,110	423	ベネズエラ	
4	6,013	92,545	100	2,270	262	6,177	10	301	4	8	7	—	25	1,246	—	—	73,991	6,660	183,029	133	エクアドル	
288	5,207	75,343	16,039	565,757	825	18,571	6	86	—	4	—	—	11	575	134	8,537	52,307	22,238	719,076	292	ペルー	
—	456	6,947	5,231	186,148	162	5,656	30	430	—	—	1	—	4	168	56	2,177	16,677	5,218	214,105	90	チリー	米
—	6,454	93,583	—	—	—	—	—	—	50	342	48	441	881	45,760	25	1,481	305,156	7,458	441,560	86	ブラジル	
—	84	1,350	900	31,360	—	—	—	—	—	—	—	—	—	—	—	—	5,277	984	38,496	8	ウルガイ	
17	18,623	278,469	23,222	842,362	240	7,885	85	3,372	—	—	—	8	52	1,273	157	9,441	251,679	43,247	1,395,139	397	その他	
—	1,818	30,808	11,666	404,694	340	11,577	25	997	—	—	—	4	29	1,466	7	393	84,349	983	474,182	141	キューバ	西印度諸島
—	151	2,187	2,522	89,146	119	3,931	1	36	1	7	1	—	9	596	5	3,525	7,273	914	106,579	96	ドミニカ	
—	92	1,496	623	22,472	12	541	3	65	—	4	—	10	14	717	1	59	2,649	761	28,371	168	ポルトリコ	
—	656	12,265	2,843	100,238	545	18,654	5	339	—	—	—	5	5	162	56	2,924	9,168	4,157	134,619	158	その他	
—	820	11,758	520	17,066	10	425	—	—	—	—	—	—	—	—	10	644	4,851	1,360	35,745	5	エジプト	
8	399	5,607	4,056	135,107	697	20,114	5	176	—	—	—	29	—	1,351	118	7,734	16,955	—	181,694	146	サイジェリア	アフリカ
501	1,020	16,511	2,385	69,54	10,583	[illegible]	[illegible]	[illegible]	[illegible]	[illegible]	[illegible]	[illegible]	[illegible]	844,88	1,[illegible]	[illegible]	[illegible]	[illegible]	404,753	498	南阿連邦	
—	1,951	28,735	5,861	197,52	345	65,28	[illegible]	[illegible]	[illegible]	[illegible]	[illegible]	[illegible]	[illegible]	2,900	[illegible]	[illegible]	[illegible]	[illegible]	417,641	578	その他	
39	18,302	309,780	126	4,444	172	4,[illegible]	62	[illegible]	[illegible]	[illegible]	[illegible]	5	36	2,896	140,541	77	5,818	[illegible]	463,031	250	オーストラリア	
27	10,042	156,217	260	9,288	586	[illegible]	99	[illegible]	[illegible]	[illegible]	1	—	1	19	728	368	26,727	8[illegible]	[illegible]	138	その他	
62,882	988,570	16,828,555	197,123	6,884,548	109,426	2,471,999	5,558	167,905	249,588	96,825	7,056	57,266	410,735	14,743,702	4,905	293,782	4,149,734	1,716,317	45,540,225	11,089	合計	

Exhibit S-32

EXHIBIT S-33

For the year of 1959
from January to December

(Value : $)

昭和34年1月～12月家庭用ミシン輸出承認実績表

LIST OF APPROVED EXPORTS OF FAMILY SEWING-MACHINES

Machinery Export No.
(機械類輸出承認番

Destination 仕向地	Head Only 頭					Bodies 足		Heads 手		Electric 電動		ジグザグ(Zig-Zag Stitching Head Only)						ジグザグ以外(Zig-Zag Compl. Parts)		
	丸頭 Round	角頭 Square	その他 Others	計 Total	金額 Value	台数 Units	金額 Value	台数 Units	金額 Value	台数 Units	金額 Value	Round 丸頭	Square 角頭	Free Arm 自由腕	Bell 釣鐘	その他 Others	Total	価額 Value	台数 Units	価額 Value
Korean Republic	2,599	151	—	2,750	41,052	92	3,643	205	4,482	8	302						1,581	51,755	2	169
Ryukyu Islands	78	2	5	85	1,464	5,583	203,064	100	3,142	6	262								67	3,928
Hong Kong	19,334	30	74	19,438	275,873	166	5,253	266	5,525	6	228	6	3	1	42	—	52	2,520	46	2,212
South Viet Nam	12,450	1	—	12,451	224,024	1	40	—	—	—	—									
Thailand	140	12,600	—	12,740	394,948	11,117	371,809	15	351	—	—	47	—	64	61	26	198	8,801	474	26,192
Malaya	145	30	—	175	2,670	9,461	310,667	574	13,914	74	2,003	26	7	5	6	—	44	1,471	20	1,486
Singapore	10,894	266	—	11,160	158,355	13,020	429,688	548	12,095	245	9,334	11	37	1	2	—	51	1,875	144	7,364
Philippines	9,680	6,290	720	16,690	298,995	573	20,081	13	289	—	—	45	—	—	505	—	540	21,035	—	—
Indonesia	10,161	—	—	10,161	144,726	—	—	—	—	—	—	—	—	—	—	—	—	—	—	—
Burma	48	—	—	48	1,728	3,245	115,022	51	1,206	25	1,077	—	—	—	—	—	—	—	71	4,078
India	土	—	—	—	—	—	—	—	—	—	—	—	—	—	—	—	—	—	—	—
Pakistan	589	57	—	646	9,832	2	68	405	9,115	3	102	2	—	—	—	—	2	60	1	76
Ceylon	2	—	—	2	29	3,558	121,876	161	4,121	6	264	13	—	1	14	25	53	2,338	73	4,377
Iran	5,325	—	—	5,325	78,165	2,702	88,635	64,221	1,431,109	11	347	5	5	—	—	—	10	508	23	1,156
Iraq	23	4	4	31	472	7,726	243,054	987	21,848	26	986	9	5	—	2	1	17	618	8	516
Aden	38	4	—	42	745	1,242	40,642	1,844	42,209	100	3,562	4	7	—	26	12	49	2,326	94	4,245
Saudi Arabia	398	—	672	1,070	14,177	2,364	77,119	11,199	241,817	22	753	5	2	—	—	—	7	230	59	1,894
Jordan	56	—	—	56	828	4,145	133,465	220	4,845	2	76	—	—	—	4	—	4	200	57	1,579
Syria	1,280	—	369	1,649	23,308	4,665	147,449	361	7,746	—	—	10	203	—	2	—	215	8,500	17	928
Lebanon	528	—	161	689	9,752	5,719	188,452	1,008	22,621	—	—	—	—	2	1	—	3	150	23	1,796
Others in Asia	35,458	223	—	35,676	517,875	8,511	278,658	6,022	132,558	65	2,446	120	75	5	87	—	286	11,694	281	14,616
Ireland	55,767	36,796	6,006	78,569	1,531,984	—	—	84	2,114	91	5,009	18,644	52	690	4	24	19,415	539,123	4	252
Netherlands	9,095	6,175	1	15,271	257,204	65	2,258	2	44	2	76	10,089	1,456	724	44	144	12,457	365,376	16	641
Belgium	5,026	4,551	—	9,577	162,393	—	—	—	—	26	1,058	5,930	508	6,282	959	160	15,639	480,841	54	2,595
West Germany	16,208	1,698	515	18,421	285,568	23	805	5	116	—	—	1,158	9	2,405	140	20	3,732	142,572	8	195
Others in Europe	1,347	1,826	357	3,530	62,314	6,801	227,750	3,086	70,216	186	6,037	12,971	707	1,505	254	942	16,379	531,292	349	23,492
U.S.A.	218,109	510,698	38,301	567,108	9,886,450	156	5,393	—	—	125	4,600	373,140	194,322	1,971	69,949	39,016	678,396	22,099,967	1,111	64,510
Canada	25,536	20,144	1,515	45,195	778,642	—	—	—	—	1	39	30,508	6,940	180	16,002	195	55,850	1,930,682	6	222
Mexico	4,606	268	—	4,874	71,958	2,075	74,099	—	—	—	—	90	15	—	35	—	140	5,695	1	57
Guatemala	5	—	—	5	70	3,126	105,810	49	1,124	—	—	1	1	1	1	—	4	150	—	—
Honduras	—	—	48	48	612	3,335	109,745	447	9,768	—	—	—	—	—	—	—	—	—	22	1,261
El Salvador	—	—	—	—	—	3,068	101,220	12	270	—	—	—	—	—	5	—	5	265	1	66
Nicaragua	2	—	—	2	30	2,102	70,549	—	—	—	—	—	—	—	—	—	—	—	62	1,927
Costa Rica	362	10	—	372	5,786	3,908	133,717	223	5,838	—	—	—	—	—	8	—	8	496	159	11,058
Panama	11	—	—	11	165	1,407	46,122	877	20,165	6	294	—	—	—	14	—	14	679	86	4,849
Colombia	1,000	12	15	1,027	15,045	144	4,844	—	—	—	—	40	1	2	604	—	1,012	46,846	—	—
Venezuela	285	—	4	289	4,361	25,319	852,941	8,409	188,122	163	5,955	1	1	—	5	—	7	401	224	10,478
Peru	4,636	401	11	5,048	77,667	1,382	47,773	34	817	—	—	119	139	27	22	—	327	12,598	22	1,344
Brazil	1,899	118	500	2,017	34,156	23,295	799,701	1,707	37,712	21	777	23	10	1	35	—	68	3,611	354	11,767
Chile	18,073	—	—	18,073	265,564	8,996	311,114	652	15,016	61	1,955	—	—	—	1	—	1	50	107	5,669
Bolivia	511	8	—	519	7,715	9,227	310,862	170	4,227	98	2,912	2	—	—	—	—	2	60	145	8,921
Paraguay	—	—	—	—	—	—	—	—	—	—	—	—	—	—	—	—	—	—	—	—
Uruguay	286	—	—	286	4,147	—	—	—	—	—	—	2	—	—	—	—	—	—	—	—
Argentina	1,527	158	—	1,685	26,472	5,142	189,969	308	7,019	216	8,551	55	1	17	3	—	105	4,715	67	2,683
Others in Latin America	50	—	—	50	727	4,697	160,106	343	8,020	22	620	—	—	—	—	—	1	69	16	925
Egypt	1,328	660	50	2,038	37,349	15,356	493,618	—	—	66	2,257	190	42	3	1	60	266	8,646	149	6,539
Libya	1	—	—	1	15	1,128	38,520	39	880	—	—	—	—	—	1	—	1	52	21	1,299
Sudan	14	1,520	—	1,534	33,952	1,408	49,426	74	1,685	51	1,825	400	—	—	8	—	408	13,470	19	1,132
Morocco	55	1	6	60	902	505	16,906	466	11,220	166	5,981	9	—	—	2	1	12	418	12	877
Tunisia	1,477	40	—	1,517	22,257	1,689	56,595	73	1,759	51	1,821	—	—	—	—	—	—	—	6	1,328
Algeria	570	9	40	619	8,692	4,427	158,161	1,289	28,775	6	213	15	—	—	16	—	31	1,081	167	9,349
Others of S.African	—	—	—	—	—	724	23,463	1,057	30,559	40	1,088	2	—	—	—	—	2	65	5	298
Others in Africa	325	9	118	1,450	21,776	4,153	128,275	10,200	219,459	548	17,625	10,394	3,160	615	254	3,041	17,564	608,114	4,274	36,348
Australia	1,098	6	—	1,104	17,444	2,938	96,610	2,616	58,275	75	2,412	21	8	13	137	17	549	18,185	24	1,406
New Zealand	19,488	14,575	687	34,498	580,901	168	5,227	215	10,770	145	5,473	10,022	1,461	825	2,699	341	15,418	525,491	124	10,136
Others in Oceania	4,568	132	165	4,865	75,113	12	438	20	390	73	6,404	474	—	—	2	176	—	553	25,868	4	27,602
	67	—	—	67	1,403	302	9,925	558	13,517	91	3,478	—	—	—	—	—	5	5	361	70	3,849
Total:	491,681	699,284	58,642	1,249,607	16,276,700	220,982	7,895,585	121,192	2,706,665	3,038	105,259	476,581	288,976	15,343	92,158	44,204	857,262	27,409,871	9,822	460,952

[fol. 2593] IN UNITED STATES DISTRICT COURT

EXHIBIT S-33

昭和34年1月～12月家庭用ミシン輸出承認実績表

LIST OF APPROVED EXPORTS OF FAMILY SEWING-MACHINES

Machinery Export Sec., Heavy Industry Bureau, MITI

(重工業局機械輸出課)

(Value : $)

Only 計		足踏 Treadle		手廻 Hand		電動 Electric		ジグザグ除く Zig-zag Excluded (Mod. Only)							ジグザグ式 Zig-zag Compl.		部品 Parts		合計 Total		No. of Licenses	Destination 向先	
Quantity	金額 Value	台数 Units	金額 Value	台数 Units	金額 Value	台数 Units	金額 Value	Semi Zig Zag	Semi Auto. Zig Zag	Full Auto. Zig Zag	Full Auto.	その他 Others	Total	金額 Value	Units	Value	Units	Value	Units	Value			
—	2,755	41,052	92	3,643	205	4,882	8	302															
5	85	1,464	5,583	205,064	100	3,142	6	262	—	—	—	—	—	—	67	3,928	27,627	5,841	239,487	367	韓国		
74	19,458	275,875	166	5,253	266	5,525	6	228	6	3	1	42	—	52	2,520	46	2,212	97,811	19,974	389,422	348	琉球	
—	12,451	224,024	1	40	—	—	—	—	—	—	—	—	—	—	—	—	—	84,168	12,452	308,232	43	香港	
—	12,740	394,948	11,117	371,809	15	351	—	—	47	—	64	61	26	198	8,801	474	26,132	217,616	24,544	1,019,657	318	南ベトナム	ア
—	175	2,670	9,461	310,667	574	13,914	74	2,005	26	7	5	6	—	44	1,471	20	1,586	24,096	10,348	356,207	309	タイ	
—	13,160	158,355	15,020	429,688	548	12,095	245	9,334	11	37	1	2	—	51	1,875	144	7,364	354,191	25,168	972,902	500	マラヤ連邦	
720	16,690	298,995	573	20,081	13	289	—	—	35	—	—	505	—	540	31,035	—	—	189,307	17,816	539,707	157	シンガポール	
—	10,161	144,726	—	—	—	—	—	—	—	—	—	—	—	—	—	—	—	83,897	10,161	228,623	34	フィリッピン	
—	48	1,728	3,245	115,022	51	1,206	25	1,077	—	—	—	—	—	—	—	71	4,078	180,106	3,440	303,217	114	インドネシア	
—	—	—	—	—	—	—	—	—	—	—	—	—	—	—	—	—	—	167,023	—	167,023	116	ビルマ	
—	646	9,852	2	68	405	9,115	5	102	2	—	—	—	—	2	60	1	76	349,635	1,059	368,888	270	イン・ド	ジ
—	2	29	3,558	121,876	161	4,121	6	264	13	—	1	14	25	53	2,338	73	4,377	6,131	3,803	139,136	89	パキスタン	
—	5,325	78,165	2,702	88,635	64,221	1,431,109	11	347	5	5	—	—	—	10	308	23	1,156	59,949	72,292	1,639,669	392	セイロン	
4	31	472	7,726	245,054	987	21,848	26	986	9	5	—	2	1	17	618	8	516	12,085	8,795	279,578	137	イラン	
—	42	745	1,242	40,642	1,844	42,209	100	3,562	4	7	—	26	12	49	2,328	94	4,245	7,555	3,571	101,286	114	イラク	
672	1,070	14,177	2,364	77,119	11,199	241,817	22	755	5	2	—	—	—	7	230	59	1,894	19,243	14,701	555,233	147	アデン	
—	56	828	4,145	133,465	220	4,843	2	76	—	—	—	4	—	4	200	27	1,579	4,222	4,454	145,213	105	サウジアラビア	
369	1,689	23,308	4,665	147,449	361	7,746	—	—	10	203	—	2	—	215	8,500	17	928	22,803	6,907	210,734	95	ヨルダン	ア
161	689	9,752	5,719	188,452	1,008	22,621	—	—	—	—	2	1	—	3	130	23	1,796	10,204	7,442	232,955	174	シリア	
—	35,676	517,875	8,511	278,658	6,022	132,558	65	2,446	120	73	5	87	—	285	11,694	281	16,616	268,547	50,840	1,228,394	661	レバノン	
6,006	78,569	1,331,984	—	—	84	2,114	91	3,009	78,644	53	690	4	24	19,415	539,133	4	232	132,212	98,163	2,008,684	250	その他	
1	15,271	257,204	68	2,258	2	44	2	76	10,089	1,456	724	44	144	12,457	383,376	10	641	169,097	27,807	812,696	319	アイルランド	
—	9,577	162,393	—	—	—	—	26	1,058	5,930	308	6,282	959	160	13,639	480,841	34	2,595	33,791	23,276	680,478	301	オランダ	
515	18,421	285,568	23	805	5	116	—	—	1,158	9	2,405	140	20	3,732	142,572	3	195	53,050	22,184	482,306	313	ベルギー	
957	3,530	62,314	6,801	227,750	3,085	70,216	186	6,037	12,971	707	1,505	254	942	16,379	531,292	389	23,497	32,518	30,320	953,624	389	西ドイツ	
8,301	567,188	9,885,430	156	5,393	—	—	125	4,600	373,140	194,322	1,971	69,949	39,016	678,398	22,099,967	1,111	64,510	652,620	1,246,898	32,712,520	2,427	その他	
1,515	45,195	778,642	—	—	—	—	1	39	30,508	6,946	180	16,002	195	53,850	1,930,682	6	333	45,009	99,030	2,754,705	424	アメリカ	
—	4,874	71,958	2,075	74,099	—	—	—	—	90	15	—	35	—	140	5,695	1	57	128,056	17,090	1,432,370	321	カナダ	北米
—	5	70	3,126	105,810	49	1,124	—	—	1	1	1	1	—	4	150	—	—	3,632	3,184	108,786	67	メキシコ	
48	48	612	3,333	109,745	447	9,768	—	—	—	—	—	—	—	—	—	23	1,261	5,636	3,851	125,022	122	グアテマラ	
—	—	—	3,068	101,220	12	270	—	—	—	—	—	5	—	5	265	1	66	6,460	3,086	108,281	40	ホンジュラス	
—	2	30	2,102	70,549	—	—	—	—	—	—	—	—	—	—	—	52	2,927	2,998	2,156	76,504	65	サルバドル	
—	372	5,786	3,908	133,717	223	5,833	—	—	—	—	—	8	—	8	496	159	11,053	3,837	4,670	160,722	153	ニカラグア	
—	11	165	1,407	46,122	877	20,165	6	294	—	—	—	14	—	14	679	86	4,849	4,514	2,411	76,788	54	コスタリカ	中
15	1,027	15,045	144	4,844	—	—	—	—	405	1	2	604	—	1,012	46,846	—	—	25,130	2,188	91,865	41	パナマ	
4	289	4,361	25,319	857,941	8,409	188,122	163	5,955	1	1	—	5	—	7	401	224	12,478	61,086	34,411	1,130,344	564	コロンビア	南
11	5,048	77,667	1,387	47,773	34	817	—	—	119	159	27	22	—	327	12,598	22	1,442	56,308	6,818	196,605	128	ベネズエラ	
300	2,017	34,156	23,295	799,701	1,707	37,712	21	777	—	10	1	35	—	68	3,611	354	21,767	46,684	27,462	944,408	378	エクアドル	
—	18,073	265,564	8,996	311,114	652	15,018	61	1,953	—	—	—	1	—	1	50	107	5,833	41,354	27,892	640,886	148	ペルー	
—	519	7,713	9,227	310,862	170	4,027	98	2,912	2	—	—	—	—	2	60	145	8,927	22,867	10,161	357,368	122	ボリビア	
—	—	—	—	—	—	—	—	—	—	—	—	—	—	—	—	—	—	34,765	—	34,765	11	チリ	
—	286	4,147	—	—	—	—	—	—	—	—	—	—	—	—	—	—	—	127	286	4,274	2	ブラジル	
—	1,685	26,472	5,142	189,969	308	7,019	216	8,551	55	1	17	30	—	103	4,713	67	2,657	166,746	7,521	407,107	150	ウルグアイ	
—	50	727	4,693	160,106	343	8,020	22	820	—	—	—	—	1	1	69	16	925	4,102	5,129	174,767	144	その他	
90	2,058	37,349	15,355	493,618	—	—	66	2,237	190	12	3	1	60	266	8,698	149	6,509	28,770	17,874	577,381	172	ジャマイカ	西印度諸島
—	1	15	1,128	38,520	39	880	—	—	—	—	—	1	—	1	52	21	1,289	4,944	1,190	45,700	64	キューバ	
—	1,556	33,952	1,408	49,426	74	1,686	51	1,825	400	—	—	8	—	408	13,470	19	1,132	13,049	3,496	114,519	57	ドミニカ	
6	60	902	505	16,906	486	11,220	166	5,081	9	—	—	2	1	12	453	13	877	4,170	1,240	39,609	60	ポルトリコ	
—	1,517	22,257	1,689	56,545	73	1,759	50	1,621	—	—	—	—	—	—	—	16	1,295	30,354	3,345	115,801	31	その他	
40	619	8,692	4,427	138,151	1,289	28,775	6	213	15	—	—	16	—	31	1,081	163	9,549	44,066	6,565	230,507	236	エジプト	
—	—	—	724	23,463	1,057	30,559	40	1,088	2	—	—	—	—	2	55	12	695	1,268	1,813	57,128	53	ナイジェリア	アフリカ
118	1,450	21,776	4,153	128,273	10,200	219,459	548	17,625	10,494	3,160	615	254	3,041	17,564	508,114	4,274	136,448	156,607	38,189	1,169,302	517	ガーナ	
—	1,104	17,444	2,958	96,610	2,616	58,275	75	2,412	21	8	13	157	170	349	18,185	240	14,161	22,454	7,324	229,421	273	南阿連邦	
687	34,498	580,901	158	5,227	215	10,770	145	5,473	10,072	1,461	825	2,699	361	15,418	525,991	139	10,136	45,054	50,561	1,183,552	321	その他	
165	4,865	75,113	12	438	20	390	173	6,404	374	—	3	176	—	553	25,863	540	27,623	57,544	6,163	193,565	63	オーストラリア	大洋州
—	67	1,403	302	9,925	558	13,517	91	3,478	—	—	—	—	5	5	360	70	3,845	1,117	1,093	33,643	107	ニュージランド	
																						その他	
342	880,397	16,276,790	220,982	7,398,585	121,192	2,706,665	3,028	105,259	476,581	208,976	15,348	92,158	44,204	857,262	27,409,871	9,822	460,952	5,921,334	2,142,863	60,274,406	13,700	合計	

Exhibit S-33

EXHIBIT S-34

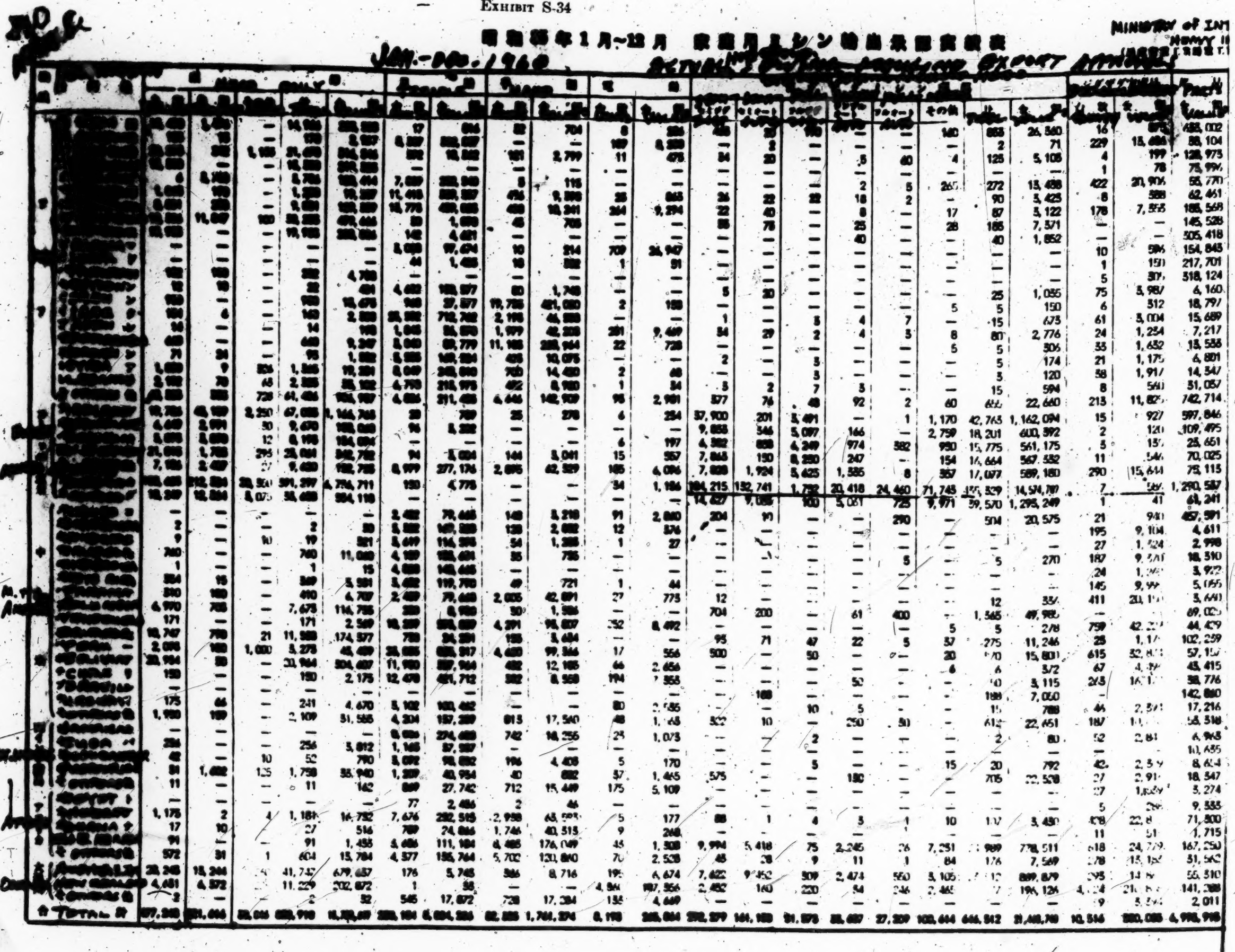

EXHIBIT S-34

昭和39年1月~12月 鉄鋼月別シェン輸出実績表

JAN.-DEC. 1964

MINISTRY OF INTERNATIONAL TRADE & INDUSTRY
HEAVY INDUSTRY BUREAU

14,946	238,939	17	814	32	704	8	286	455	20	110	—	—	140	853	24,360	16	875	485,002	15,872	857,551	482		
178	2,157	8,387	302,087	—	—	107	8,288	—	2	—	—	—	—	2	71	229	15,486	88,104	8,977	345,128	480		
21,670	344,546	592	18,349	181	2,799	11	475	34	20	—	5	40	4	125	5,105	4	199	128,975	22,521	472,457	544		
15,350	219,388	—	—	—	—	—	—	—	—	—	—	—	—	—	—	1	78	75,996	15,311	295,399	88		
8,706	133,414	7,689	332,540	8	115	—	—	—	—	—	2	5	265	272	15,488	422	20,906	55,770	12,294	465,185	201		
1,288	19,287	11,413	359,357	456	9,899	25	865	26	22	22	18	2	—	90	5,425	8	588	62,461	15,280	455,127	579		
9,091	139,889	15,775	489,088	458	10,341	244	9,294	22	40	—	8	—	17	87	3,122	178	7,958	185,568	25,821	781,940	489		
20,288	299,444	80	1,080	46	705	—	—	55	76	—	25	—	28	185	7,371	—	—	145,528	30,509	654,360	180		
19,955	288,884	142	4,421	—	—	—	—	—	—	—	40	—	—	40	1,852	—	—	505,418	20,185	600,777	128		
—	—	5,088	97,674	10	214	709	24,907	—	—	—	—	—	—	—	—	10	596	154,845	5,757	280,274	88		
—	—	44	1,435	18	882	1	91	—	—	—	—	—	—	—	—	1	150	217,701	64	219,709	159		
382	4,788	—	—	—	—	—	—	—	—	—	—	—	—	—	—	5	807	318,124	287	825,167	189		
22	401	4,452	180,577	83	1,748	—	—	5	20	—	—	—	—	—	25	75	5,987	6,160	4,884	165,908	104		
780	15,675	988	27,577	19,785	421,080	2	188	—	—	—	—	—	5	5	150	6	512	18,797	21,666	481,489	124		
140	2,330	28,582	712,762	2,195	44,588	—	—	1	—	—	—	—	—	—	675	61	3,004	15,689	25,961	780,986	262		
14	198	1,865	54,570	1,979	42,208	281	9,469	84	29	—	3	4	7	—	15	24	1,254	7,217	4,221	119,492	157		
460	9,247	3,060	89,779	11,185	228,944	22	788	—	—	—	2	4	3	8	80	2,776	55	1,652	18,538	14,945	344,189	105	
95	1,382	5,885	149,384	425	10,075	—	—	2	—	—	3	—	—	5	5	306	21	1,175	6,801	6,129	189,881	120	
1,365	19,251	8,049	248,610	700	14,480	2	48	—	—	—	3	—	—	—	5	174	58	1,917	14,347	10,157	298,913	104	
2,325	35,102	4,798	215,975	482	8,980	1	34	8	2	7	3	—	—	—	5	120	8	560	31,057	9,549	280,222	149	
61,406	904,957	4,886	211,485	4,648	142,907	98	2,981	857	76	48	92	2	60	885	15	594	213	11,825	742,714	75,859	2,041,841	821	
67,085	1,144,765	30	789	25	278	6	254	57,930	201	5,491	—	1	1,170	42,765	22,660	15	927	597,846	109,914	2,928,991	854		
9,670	158,068	96	5,202	—	—	—	—	9,885	546	5,097	166	—	2,759	18,201	1,162,094	2	120	109,495	27,949	871,277	886		
8,195	134,094	—	—	—	—	6	197	4,382	858	4,249	974	382	990	15,775	600,392	5	135	25,651	25,979	719,252	268		
25,081	342,752	94	5,004	144	3,041	15	557	7,845	150	8,280	247	—	154	14,664	561,175	11	546	70,025	39,989	987,257	898		
9,420	152,758	8,979	277,176	2,895	62,329	185	4,096	7,838	1,924	5,425	1,385	8	357	17,097	567,532	290	15,644	589,180	39,046	1,178,291	492		
391,297	4,756,711	150	4,775	—	—	54	1,186	184,215	132,741	1,752	20,418	24,460	71,745	155,529	14,574,787	7	586	1,290,587	826,817	22,628,482	2,106		
33,488	554,118	—	—	—	—	—	—	14,627	9,085	100	5,051	725	9,971	39,570	1,295,249	1	41	61,241	73,259	1,908,649	588		
—	—	2,422	79,448	148	3,218	91	2,880	204	90	—	—	290	—	504	20,575	21	940	457,591	3,186	944,847	185		
2	30	3,322	169,328	128	2,892	12	376	—	—	—	—	—	—	—	—	195	9,104	4,611	5,659	186,501	108		
19	321	3,619	114,595	54	1,285	1	27	—	—	—	—	—	—	—	—	27	1,324	2,998	3,720	122,546	96		
760	11,060	4,189	133,481	35	755	—	—	—	—	—	—	5	—	5	270	187	9,570	18,310	5,176	173,578	87		
1	15	4,828	148,465	—	—	—	—	—	—	—	—	—	—	—	—	24	1,292	3,922	4,853	158,864	98		
369	5,551	3,482	119,790	49	721	1	44	—	—	—	—	—	—	—	—	145	9,999	5,055	4,246	141,136	132		
410	6,707	2,489	79,668	2,005	42,891	27	775	12	—	—	—	—	—	12	334	411	20,194	3,660	5,354	154,185	95		
7,675	114,755	280	8,980	50	1,586	—	—	704	200	—	61	400	—	1,565	49,980	—		69,025	9,568	246,281	74		
171	2,569	18,209	585,889	4,291	95,807	352	8,492	—	—	—	—	—	5	5	278	759	42,227	44,459	25,687	788,661	472		
11,588	174,377	780	24,251	155	3,634	—	—	93	71	47	22	5	37	275	11,246	28	1,170	102,259	12,741	846,902	205		
5,275	45,439	25,085	885,517	4,620	99,566	17	556	500	—	50	—	—	20	170	15,801	615	32,803	57,157	34,150	1,094,709	467		
30,964	304,607	11,950	387,944	482	12,185	66	2,656	—	—	—	—	—	6	6	372	67	4,399	43,415	35,885	788,695	210		
150	2,175	12,478	421,712	382	8,558	194	7,358	—	—	—	—	—	—	50	3,115	263	16,170	58,776	15,467	497,861	180		
—	—	—	—	—	—	—	—	—	—	188	—	—	—	188	7,050	—		142,860	198	149,910	35		
241	4,670	3,102	100,462	—	—	83	2,535	—	—	10	5	—	—	15	788	44	2,391	17,216	3,484	128,065	62		
2,109	31,565	4,204	157,289	813	17,560	484	1,568	322	10	—	250	30	—	612	22,651	187	10,170	58,318	7,973	275,986	188		
—	—	8,006	274,458	742	18,256	28	1,073	—	—	2	—	—	—	2	80	52	2,881	6,963	8,825	305,869	208		
256	3,812	1,165	37,587	—	—	—	—	—	—	—	—	—	—	—	—	—		10,435	1,421	51,984	14		
52	790	3,092	98,852	196	4,408	5	170	—	—	5	—	—	15	20	792	42	2,359	8,634	5,407	115,970	69		
1,758	35,940	1,209	40,954	40	882	37	1,445	575	—	—	180	—	—	705	22,528	27	2,910	18,347	5,776	121,052	66		
11	162	869	27,742	712	15,449	175	5,109	—	—	—	—	—	—	—	—	27	1,589	3,274	1,794	58,275	60		
—	—	77	2,436	2	46	—	—	—	—	—	—	—	—	—	—	5	286	9,335	84	12,108	6		
1,181	16,752	7,676	252,515	2,938	63,595	5	177	88	1	4	5	1	10	107	3,430	308	22,818	71,300	12,385	410,622	366		
27	516	789	24,866	1,746	40,513	9	268	—	—	—	—	—	—	—	—	11	511	1,715	2,582	68,195	54		
91	1,435	5,686	111,184	8,485	176,049	45	1,308	9,994	5,418	75	2,245	26	7,251	989	778,511	618	24,779	167,250	37,910	1,260,514	455		
604	13,784	4,377	135,764	5,702	120,860	70	2,528	43	28	9	11	1	84	176	7,569	278	15,152	31,562	11,207	325,250	347		
41,747	679,657	176	5,745	386	8,716	195	6,674	7,622	9,452	309	2,474	560	5,105	12	889,879	295	14,857	55,310	48,309	1,660,824	556		
11,229	202,872	1	35	—	—	4,864	187,356	2,452	160	220	54	246	2,465	7	196,126	4,134	210,865	141,388	25,691	898,545	327		
2	32	545	17,872	728	17,284	135	4,649	—	—	—	—	—	—	—	—	59	3,593	2,011	1,467	45,262	144		
838,910	11,338,649	280,184	8,804,286	82,355	1,764,274	8,198	265,864	292,279	161,180	31,575	55,687	27,209	100,644	646,342	21,468,788	10,514	550,085	6,998,998	1,336,448	32,782,148	14,981		TOTAL

Exhibit S-34

EXHIBIT S-39

IF YOU'RE NOT SELLING THIS MACHINE you're working too hard!

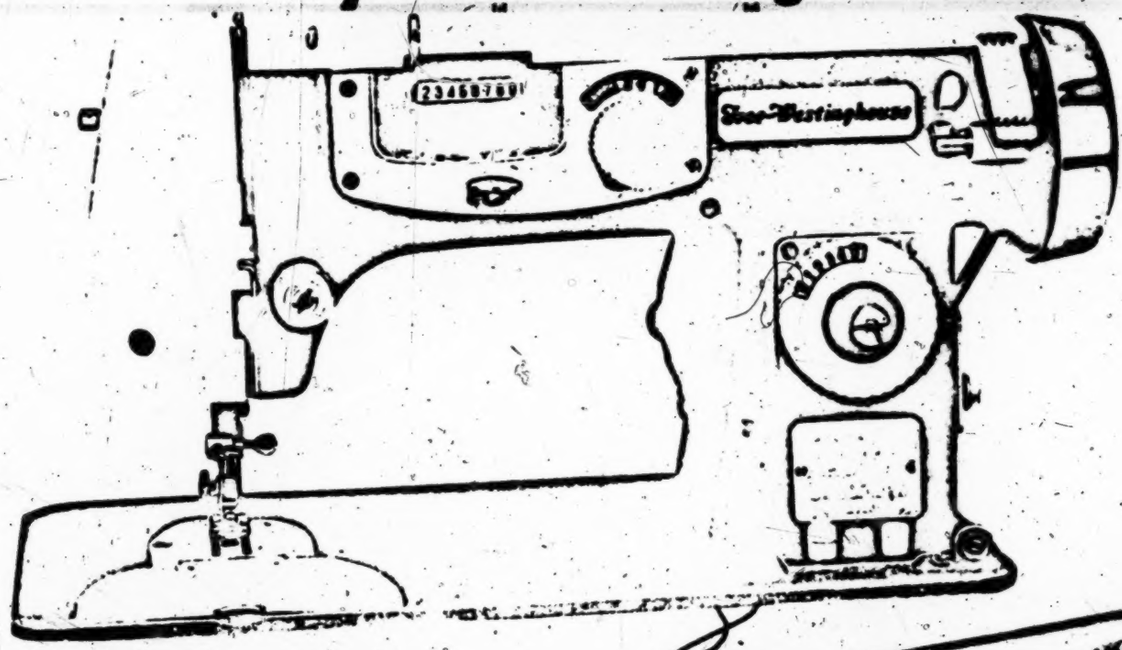

Free-Westinghouse Eight-O-Three-A
Super Deluxe A-u-t-o-m-a-t-i-c

it sells itself!

BIG NEWS is the revolutionary new Free-Westinghouse Super Deluxe 803-A Automatic! It's an "automatic" seller . . . designed for the needs of everyone . . . It's the one machine designed to "do everything" . . . doing it simply, easily, and with perfect precision. This 90th Anniversary 803-A Automatic IS your leading profit maker for 1959. Here's why:

- $ COLORFUL – Smart unusual styling in two-tone blue and ivory
- $ AUTOMATIC – Typewriter key selects your patterns
- $ BUILT-IN-CAMS – From case hardened steel to retain clear sharp patterns always
- $ FULLY AUTOMATIC – But simplest of all to use
- $ EXCLUSIVE MULTIPLE NEEDLE POSITIONING – Shift the needle not the material
- $ PATTERNS – Decorative plate on arm
- $ EXCLUSIVE NEEDLE POINT FEED

Plus the usual Free-Westinghouse features such as Light over the needle • Two polyethylene spool pins • Automatic bobbin winder • Dial stitch length control • Push button reverse • Push button drop feed • Twin tension for multiple thread • Front hook • Extra large hand hole cover • Extra twin needles • Short shank presser bar • Gear driven underbed mechanism • High torque motor • V belt • Foolproof clutch release • Double thread guides • all added to 90 years of experience makes this 90th Anniversary model the most outstanding sewing machine in the world.

MAIL THIS COUPON

FREE SEWING MACHINE CO. P. O. BOX 840, Beverly Hills, Calif.
I am interested in making more profit with the new Free-Westinghouse 90th Anniversary line. Please send full information:

Name _____
Company _____
Street _____ State _____
City _____

Behind the Scenes Girl

1627

[fol. 2602] In United States District Court

Exhibit S-43

Sneak Preview of the 1958 Fleetwood®

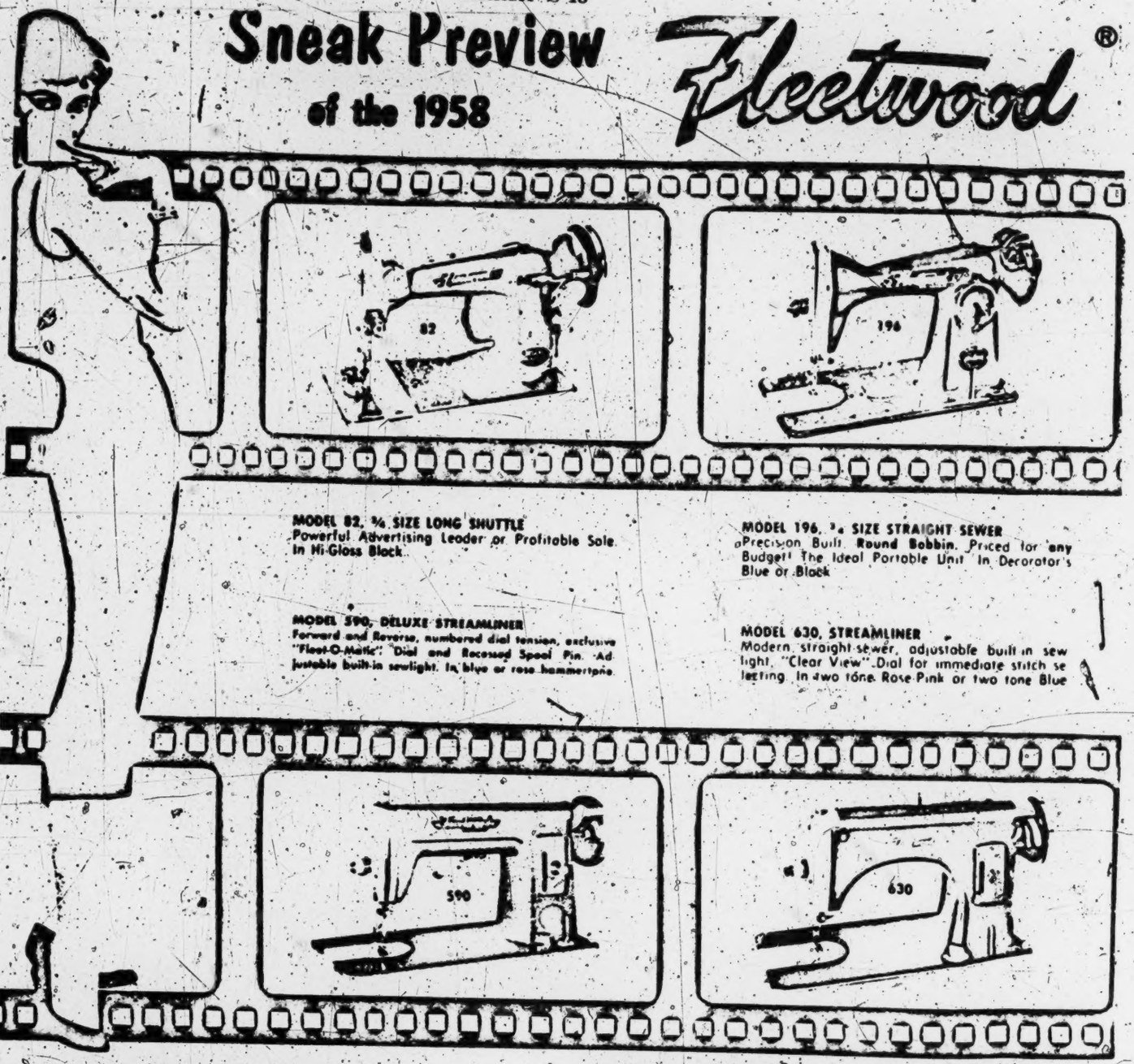

MODEL 82, ¾ SIZE LONG SHUTTLE
Powerful Advertising Leader or Profitable Sale. In Hi-Gloss Black.

MODEL 196, ¾ SIZE STRAIGHT SEWER
Precision Built. Round Bobbin. Priced for any Budget! The Ideal Portable Unit. In Decorator's Blue or Black

MODEL 590, DELUXE STREAMLINER
Forward and Reverse, numbered dial tension, exclusive "Fleet-O-Matic" Dial and Recessed Spool Pin. Adjustable built-in sewlight. In blue or rose hammertone.

MODEL 630, STREAMLINER
Modern straight-sewer, adjustable built-in sew light, "Clear View" Dial for immediate stitch selecting. In two tone Rose-Pink or two tone Blue

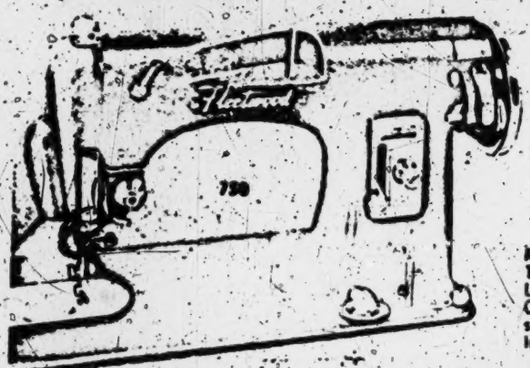

EXCLUSIVE AND FULLY

for dealers, distributors and de

ONLY ONE Fleetwood Dealer to a town! ONLY

ORDER DIRECT FROM THE

MODEL 750, SUPER DELUXE
The star of the Fleetwood line. New Link Motion take-up. Exclusive Fleet-O-Matic Clear-View Dial and recessed spool pin. Sewlight built into face plate. In blue or rose hammertone.

Guaranteed Profit. Quality Line.
No Order too Large or Small for immediate delivery.

S.K.S. Machine Company
4448 Broadway • Orraine 7-1600 • New York 40, N.Y.

MAIL COUPON NOW FOR

S.K.S. MACHINE COMPANY
• 4448 Broadway

Gentlemen I am interested in an exclusive ship on the complete FLEETWOOD line

NAME

FIRM NAME

ADDRESS

CITY ZONE

1628

[fols. 2603-2621]

PARADE OF Award Winning SEWING MACHINES

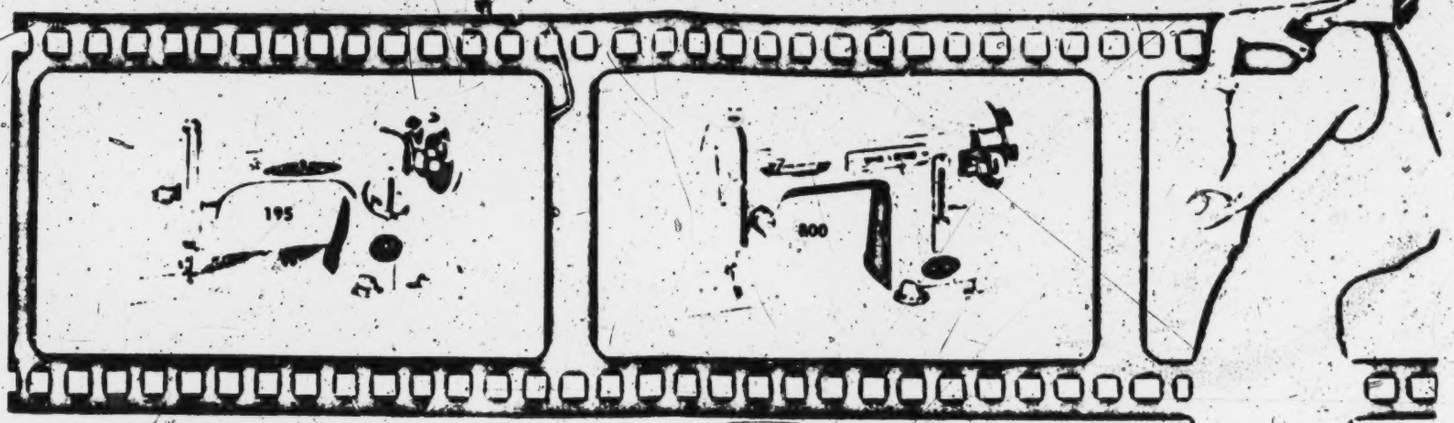

MODEL 195, FULL SIZE STRAIGHT SEWER
Precision Built, Round Bobbin, forward and reverse. Priced for any Budget! In Decorator's Blue or Black.

MODEL 800, ZIG-ZAG SEWING MACHINE
Open the Door to **ZIG ZAG** Sales. Sewlight Built into face plate. Automatic bobbin winder. In Two Tone Blue and White.

MODEL 289, FULLY AUTOMATIC
Over 5000 stitches AUTOMATICALLY. 14 Magic Record Discs. In two tone Blue Grey.

MODEL 958, FULLY AUTOMATIC ZIG-ZAG
It's a real robot with 20 Built-in Cams. Fully Built-in Mechanism. Push Button Reverse. Sew light Built in Face Plate. Three Color Combination Mother of Pearl White, Green and Gold.

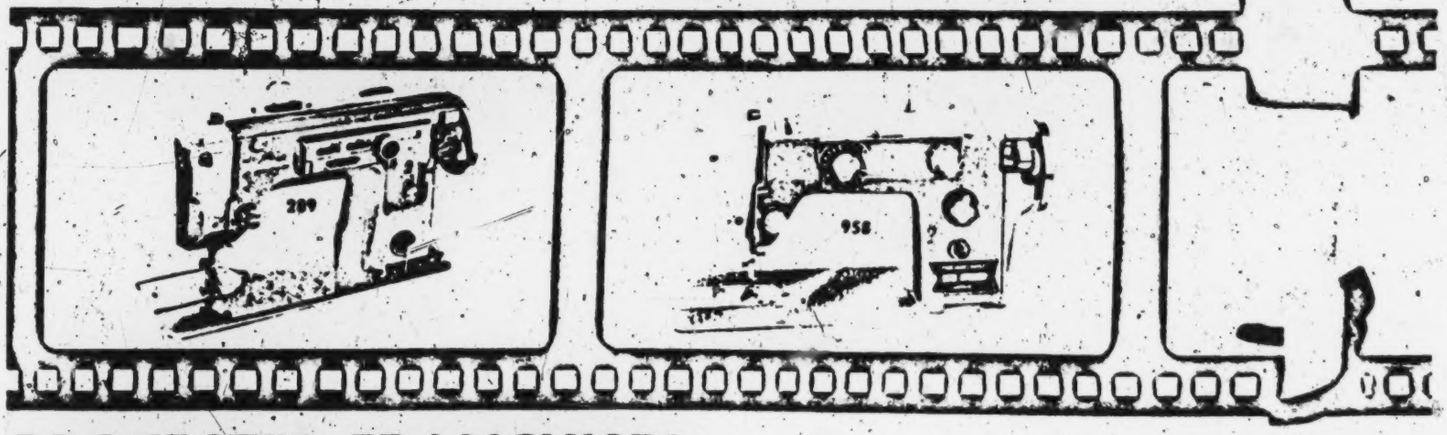

PROTECTED FRANCHISES

partment stores available NOW.

ONE Fleetwood Distributor to a given area.

IMPORTER... AND SAVE

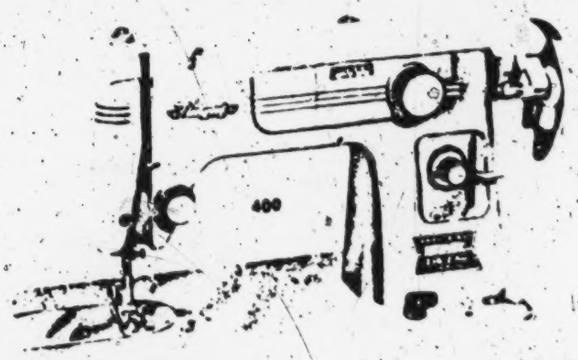

MODEL 400, AUTOMATIC ZIG ZAG
10 Record Discs. Sewlight built into face plate. Numbered dial tension. In Mother of Pearl white and green.

COMPLETE INFORMATION:

Dept. 18
• New York 40, N. Y.

(please check) Dealership | Distributor
Please send your FREE catalog and prices

TITLE

STATE

NATIONALLY ADVERTISED AND ACCEPTED

SKS Machine Company
4448 Broadway ○ LOrraine 7-1600 ○ New York 40, N. Y.

1629

EXHIBIT S-61

NEW WINNER OF EUROPE'S AWARD

for [illegible]rfection in Industrial Design and Perform[illegible]," the incredible

Super Deluxe

AUTOMATIC

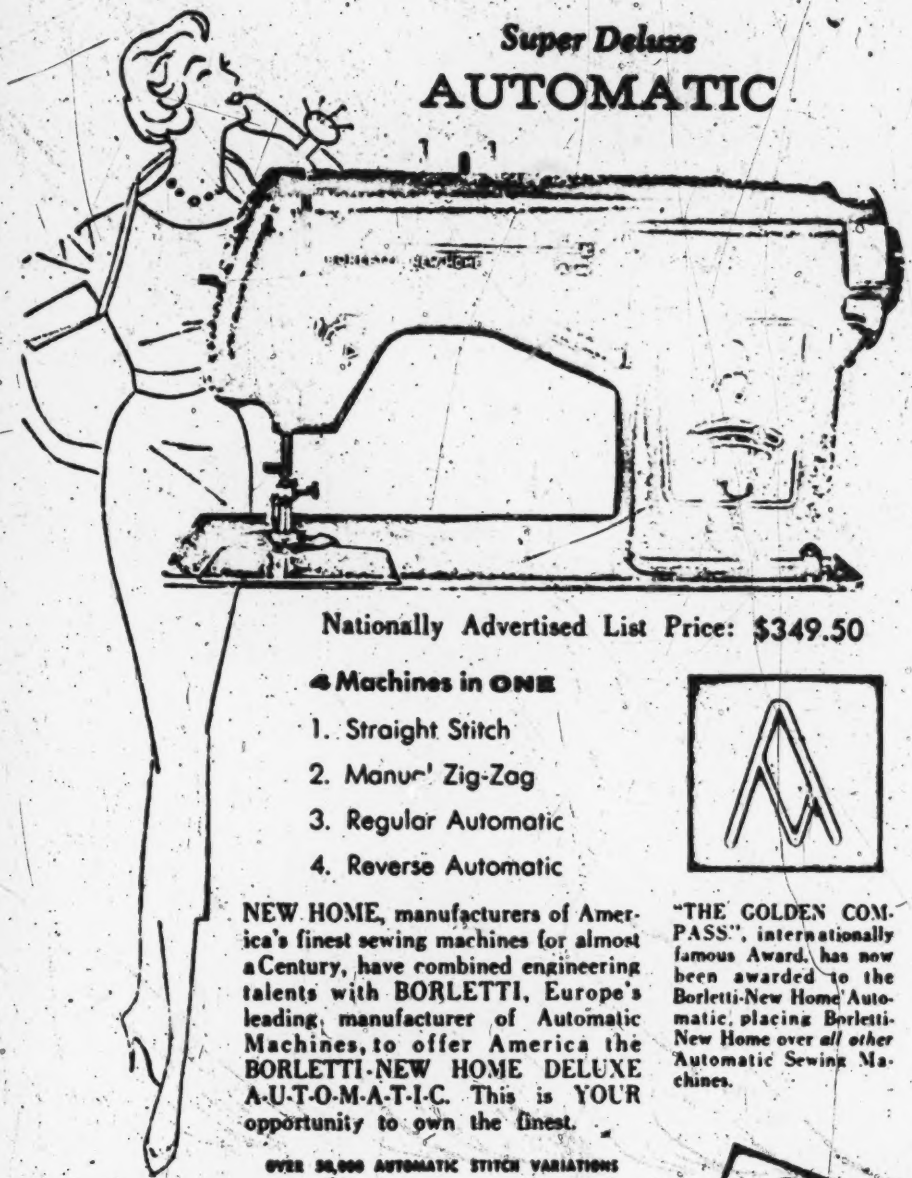

Nationally Advertised List Price: $349.50

4 Machines in ONE

1. Straight Stitch
2. Manu[illegible] Zig-Zag
3. Regular Automatic
4. Reverse Automatic

NEW HOME, manufacturers of America's finest sewing machines for almost a Century, have combined engineering talents with BORLETTI, Europe's leading manufacturer of Automatic Machines, to offer America the BORLETTI-NEW HOME DELUXE A-U-T-O-M-A-T-I-C. This is YOUR opportunity to own the finest.

"THE GOLDEN COMPASS", internationally famous Award, has now been awarded to the Borletti-New Home Automatic, placing Borletti-New Home over *all other* Automatic Sewing Machines.

OVER 50,000 AUTOMATIC STITCH VARIATIONS

In nearly every instance your present sewing machine will more than cover the down payment. The balance, only a few dollars a month. So call your nearest dealer for FREE Home Trial at no obligation. Or, mail coupon below:

Look for this BORLETTI-NEW HOME Exclusive Franchise Certificate before you buy. It's your guarantee of quality, protection and reliability.

NEW HOME

LIGHT RUNNING SEWING MACHINE CO.

P. O. Box 840 • Beverly Hills, California

NEW HOME

4 Machines in ONE

1. Straight Stitch
2. Manual Zig-Zag
3. Regular Automatic
4. Reverse Automatic

NEW HOME, manufacturers of America's finest sewing machines for almost a Century, have combined engineering talents with BORLETTI, Europe's leading manufacturer of Automatic Machines, to offer America the BORLETTI-NEW HOME DELUXE A-U-T-O-M-A-T-I-C. This is YOUR opportunity to own the finest.

"THE GOLDEN COMPASS", internationally famous Award, has now been awarded to the Borletti-New Home Automatic, placing Borletti-New Home over *all other* Automatic Sewing Machines.

OVER 50,000 AUTOMATIC STITCH VARIATIONS

In nearly every instance your present sewing machine will more than cover the down payment. The balance, only a few dollars a month. So call your nearest dealer for FREE Home Trial at no obligation. Or, mail coupon below:

Look for this BORLETTI-NEW HOME Exclusive Franchise Certificate before you buy. It's your guarantee of quality, protection and reliability.

NEW HOME
LIGHT RUNNING
SEWING MACHINE CO.
P. O. Box 840 • Beverly Hills, California

Gentlemen:
Please send me your FREE Color Folder on the new 1957 BORLETTI-NEW HOME Sewing Machines and also the name of my nearest BORLETTI-NEW HOME Authorized Dealer.

Name .....

Address .....

City ..... State .....

Phone .....

If RFD please include full directions to your Home.

Mc Call Pattern Book - Fall '57 89

opportunity to own the finest.

OVER 50,000 AUTOMATIC STITCH VARIATIONS

In nearly every instance your present sewing machine will more than cover the down payment. The balance, only a few dollars a month. So call your nearest dealer for FREE Home Trial at no obligation. Or, mail coupon below:

Look for this BORLETTI-NEW HOME Exclusive Franchise Certificate before you buy. It's your guarantee of quality, protection and reliability.

NEW HOME
LIGHT RUNNING
SEWING MACHINE CO.
P. O. Box 840 • Beverly Hills, California

Gentlemen:
Please send me your FREE Color Folder on the new 1957 BORLETTI-NEW HOME Sewing Machines and also the name of my nearest BORLETTI-NEW HOME Authorized Dealer.

Name .....

Address .....

City ..... State .....

Phone .....

If RFD please include full directions to your Home.

895

BROTHER

WE'RE TRYING OUR BEST TO MAKE THEM FAST ENOUGH

The Golden Age Quintet

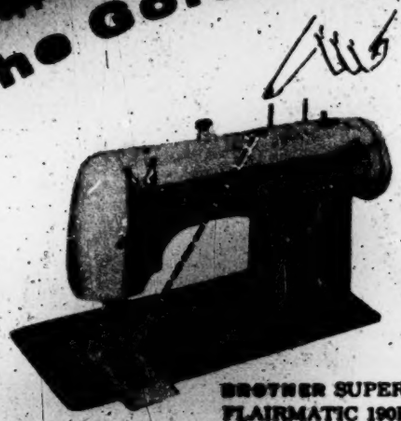

BROTHER SUPER FLAIRMATIC 190B

BROTHER GALAXIE 230

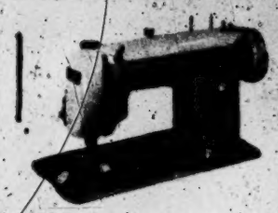

NEW BROTHER ELECTRA 140. All-purpose zigzag new model does everything!

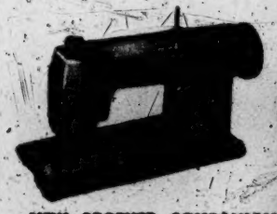

NEW BROTHER COMPANION 220. For precise straight sewing, with pushbutton reverse.

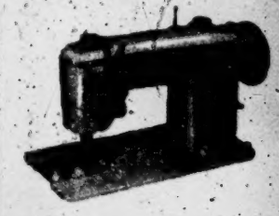

NEW BROTHER SUPER SELECTOMATIC 160. It's fully automatic—you see the stitch you choose on the picture dial.

EXCLUSIVE...

TWO NEW WAYS TO MAKE BUTTONHOLES AUTOMATICALLY!

BROTHER SUPER FLAIRMATIC 190B— Just touch the button to make button holes! Exclusive BROTHER feature is built-in. Sew perfect straight and hundreds of fancy stitches with this advanced sewing machine.

BROTHER GALAXIE 230—Just insert "FK- 18," the exclusive drop-in pattern key that automatically sews button holes . . you'll enjoy sewing hundreds of automatic designs plus perfect straight stitches to put fashions at your fingertips!

PRODUCTION INCREASED 60%

LINE THAT ... THE ACCENT ...

BROTHER®

Canadian Office: Brother International Corp. (Canada) Ltd., 5061 Cote de Liesse Road, Montreal 9, Quebec

S-72 2633

[fol. 2676]

IN UNITED STATES DISTRICT COURT

EXHIBIT S-87

Multiple Cam

Model Name	Retailer	Initial Price	Price at Which Store Willing to Sell	Exhibit S-87 (Par. 148) Single Price Specified by Store
A & S Deluxe	A & S Dept. Store Babylon, N.Y.	$339.50	$219.50	
White Automatic*	McGurdy Dept. Store Rochester, N.Y.	251.95	199.00	
Super Selectomatic #100	Sincere Sales & Service Los Angeles, Calif.			$189.50
Sewmor 990	Active Sew. Mach. Co. New York City, N.Y.			175.00
Super Selectomatic #100	Taylor Sewing Machine Co. Los Angeles, Calif.	189.50	169.50	
Whitehouse Deluxe Stitch 3 Needle*	Customers Mart of America Anaheim, Calif.			169.00
Brother 100	William Ernst Sew. Mach. Co. Buffalo, N.Y.	205.00	165.00 (With trade in)	
Free Westinghouse 803A	Ray's Sewing Machine Co. Buffalo, N.Y.	200.00	160.00 (With trade in)	
Viscount 740	Davega's Brooklyn, N.Y.	319.95	149.95	
Viscount Deluxe 740	Davega Discount Center Manhasset, L.I., N.Y.	319.95	139.95	
Wizard Imperial Auto. #2JC8867*	Western Auto Supply Rochester, N.Y.			134.95
Brother Selectomatic	American Sewing Machine Co. Brooklyn, N.Y.	—	133.00	

Exhibit S-87
(Par. 148)

Multiple Cam

Model Name	Retailer	Initial Price	Price at Which Store Willing to Sell	Single Price Specified by Store
Coronado Model #45-4116	Gamble Store 6530 University Avenue Minneapolis, Minn.	129.95	129.95	
Kingston 400 Deluxe Automatic*	Rudolphs Jewelers Rochester, N.Y.			129.95
Coronado Model #45-4116	Gamble Store 1000 W. Broadway Minneapolis, Minn.	129.95	129.95	
Gimbel Single Dial #195	Gimbel's New York City, N.Y.	179.95	119.95 (with lessons) (on sale)	
Coronado Model #45-4116	Gamble Store 101 W. Lake St. Minneapolis, Minn.	139.50	119.50	
Riviera 061*	W. T. Grant Rochester, N.Y.			99.95
Coronado Model #45-4116	4013 Central Ave., N.E. Minneapolis, Minn.	99.95	99.95	
Super Zigzag Model Sam	Bennett Brothers New York, N.Y.	179.95	91.00	
Coronado Model #45-4116	Gamble's St. Cloud, Minn.	102.00	90.00	
Coronado Model #45-4116	Gamble Store 4165 No. Lyndale Ave. Minneapolis, Minn.	89.95 (head only)	89.95 (head only)	
Riviera 100	W. T. Grant Philadelphia, Pa.	89.50	89.50	

[fol. 2677]

EXHIBIT S-88

Exhibit S-88
(Par. 148)

Replaceable Cam

Model Name	Retailer	Initial Price	Price at Which Store Willing to Sell	Single Price Specified by Store
Kenmore Model 90	Sears Roebuck Rochester, N.Y.	$230.00	$10 or $15 off for cash	
White 673	M. Salsman 420 Lexington Avenue New York, N.Y.	294.00	$200.00 (including lessons)	
White 673	Younkers Des Moines, Iowa	199.50	199.50	
White 673	Wheeler Sewing Machine Co. Santa Ana, Calif.	294.00	199.00	
Sears Roebuck #88	Sears Roebuck Shop Des Moines, Iowa	196.00	196.00	
Kenmore #90	Sears Roebuck & Co. Catalogue Shop by Phone LO 4-2409	189.95 (Catalog Jubilee Special)	189.95	
Brother Galaxie 230	Sincere Sales & Service Los Angeles, Calif.			$189.50
White Auto. 3354	Wheeler Sewing Machine Co. Santa Ana, Calif.	274.00	189.00	
Kenmore Model 90 #158-840	Sears Roebuck Flushing, N.Y.			180.00
Continental 2500	Sterling Sew. & Vac. Co. Hicksville, N.Y.	340.00	175.00	
Macys Own Super Haverhill House*	Macy's Dept. Store New York, N.Y.			169.95
Morse Duo Matic	Hub Vac Stores Brooklyn, N.Y.	249.50	169.50	

(Par. 148)

Replaceable Cam

Model Name	Retailer	Initial Price	Price at Which Store Willing to Sell	Single Price Specified by Store
Brother Galaxie 230	Necchi Elna Pfaff Philadelphia, Pa.	169.00	169.00	
Kenmore E—#47	Sears Roebuck & Co. 326 East 149 St., Bronx, N.Y.			164.95
Kenmore #90	Sears Roebuck & Co. Fordham Road, Bronx, N.Y.	189.95	159.88 (without buttonhole attachment)	
Kenmore F—#90	Sears Roebuck 326 East 149 St., Bronx, N.Y.			157.95
Tri Span 88	Sears Roebuck Mt. Vernon, N.Y.	189.95	154.95 (on sale)	
Diplomatic	White Electric Appl. Co. New York, N.Y.	145.00 (special for week)	145.00	
White Rotary	A & S Hempstead, N.Y.			139.50
Stradivaro 95*	Active Sew. Mach. Co. New York, N.Y.			135.00
Keystone*	Gamble Store Bairnard, Minn.	139.95	129.95 (special for day)	
Kenmore #47	Sears Roebuck & Co. Catalogue Shop by Phone LO 4-2400	129.95	129.95	
Brother Galaxie #30	Soffa Sew. Mach. Co. Los Angeles, Calif.	329.50	129.50	
Good Housekeeping	Time Credit Jewelers Brooklyn, N.Y.			125.00
Kenmore D—#46	Sears Roebuck & Co. 326 East 149 St., Bronx, N.Y.			115.95
Dressmakers Automatic	Acme New York, N.Y.			109.00
Kenmore #46	Sears Roebuck & Co. Catalogue Shop by Phone LO 4-2400	99.95	99.95	
Kenmore D	Sears Roebuck Mt. Vernon, N.Y.			99.95
Fleetwood	Brittany Brooklyn, N.Y.	199.50	99.50	
Riviera 142*	W. T. Grant Rochester, N.Y.			89.95
Sterlin	Vim Stores Brooklyn, N.Y.	No list	88.88	
Crown Automatic	Century Wholesale Supply Rochester, N.Y.	199.00	86.70	
Kingston Zig Zag	Rudolphs Jewelers Rochester, N.Y.			78.88
Wisard Custom*	Western Auto Rochester, N.Y.			74.95
Riviera Semi-Auto.*	W. T. Grant Philadelphia, Pa.			69.50

[fol. 2678]

EXHIBIT S-89

Exhibit S-89
(Par. 148)

Model Name	Manual Retailer	Initial Price	Price at Which Store Willing to Sell	Single Price Specified By Store
Super Macy	Macy's Roosevelt Field Long Island, N.Y.	$179.95	$179.95	
Fleetwood E.Y.	Sobel Vacuum Cln. Ser. East Williston, L.I., N.Y.	200.00	150.00	
White Semi Automatic*	McCurdy's Dept. Store Rochester, N.Y.	192.95	149.95	
Good Housekeeping	Sobel Vacuum Cln. Ser. Huntington, L.I., N.Y.	—	149.95	
Electra 140	Sincere Sales & Service Los Angeles, Calif.			$145.00
Free Westinghouse 370	Customers Mart of America Anaheim, Calif.	199.50	139.50	
Electra 140	Necchi Elna Pfaff Philadelphia, Pa.			129.50
Universal Min.*	Associated Sewing Machine Co. Los Angeles, Calif.			129.50
White De Luxe Z.Z. 2334	Wheeler Sewing Machine Co. Santa Ana, Calif.	229.00	129.00	
Seamstress	Sterling Sewing Machine Co. Hicksville, L.I., N.Y.	139.00	129.00	
White House Zigzag 132*	Customers Mart of America Anaheim, Calif.			129.00
Cosmopolitan M.I. 305 Z.Z.	Vims Stores Smithtown, L.I., N.Y.	139.00	127.00	
Brothers 190B	William Ernst Sew. Mach. Co. Buffalo, N.Y.	165.00	125.00 (with trade in)	
Free Westinghouse 603	Ray's Sew. Mach. Co. Buffalo, N.Y.	162.00	122.00 (with trade in)	
International Rotary	A & S Hempstead, N.Y.			119.50
White 2137	M. Salzman New York, N.Y.			119.00
Modern Style 130	Macy's Jamaica, L.I., N.Y.			114.95
A & S Special	A & S Hempstead, N.Y.			109.50
White House Deluxe 140*	Customers Mart of America Anaheim, Calif.	179.99	99.95	
Sanshin 139	Macy's Dept. Store New York, N.Y.	129.50	99.95 (on sale)	
Macy's Semi Automatic*	Macy's New York, N.Y.			99.95
Stradivaro 125	Brittany Brooklyn, N.Y.	199.50	99.50	
Peerless	Kress 5 & 10 40th St. & 5th, New York, N.Y.			99.50
Riviera 140	Grant's 1535 3rd Ave., N.Y., N.Y.	94.00	94.00	
Riviera 140	Grant's 1033 St. Nicholas Ave., New York, N.Y.			94.00
Cosmopolitan 106 Z.Z.	Vims Smithtown, L.I., N.Y.	120.00	90.00	
Electra or Riviera 140	W. T. Grant Flushing, L.I., N.Y.			89.95
Brother Riviera 140	Grant's 605 West 181 St., N.Y., N.Y.	94.00	89.95 (floor model)	
White 628	Wheeler Sewing Machine Co. Santa Ana, Calif.			89.00 (base only and no light)
Cosmopolitan 305	Vim Stores Brooklyn, N.Y.	no list	88.88	

Exhibit S-89
(Par. 148)

Manual

Model Name	Retailer	Initial Price	Price at Which Store Willing to Sell	Single Price Specified By Store
Modern	Stitch-in-Time Sew. Ctr. Levittown, L.I., N.Y.	95.00	85.00	
Viscount 940	Davega Discount Center Manhasset, L.I., N.Y.	139.95	69.95	
Viscount 940	Davegas Brooklyn, N.Y.	139.95	69.95	
Flairmatic	Soffa Sew. Mach. Co. Los Angeles, Calif.			69.50
Crown Deluxe Semi Automatic	Century Wholesale Supply Rochester, N.Y.	149.00	64.40	

[fol. 2679]

Exhibit S-90

Exhibit S-90
(Par. 148)

Multiple Cam

Model Name	Retailer	Initial Price	Price At Which Store Willing To Sell	Single Price Specified By Store
Bernina 640-2	Sewing Service Center Los Angeles, Calif.	$399.00	$399.00	
Bernina 530-2 (Record)	Taylor Sewing Machine Co. Los Angeles, Calif.	389.00	389.00	
Pfaff 360-261	Sewing Machine Services Store Culver City, Calif.			$369.00
Pfaff 260	Sewing Machine Services Store Culver City, Calif.			369.00
Pfaff 230	Taylor Sewing Machine Co. Los Angeles, Calif.			369.00
Borletti New Home Super Deluxe Automatic	Carson Pirie Scott Chicago, Ill.	359.50	359.50	
Pfaff 260	Hammels Dept. Store Mobile, Ala.	339.95	339.95	
Pfaff 260A	Max M. Dreyfus New Orleans, La.	339.50	339.50	
Pfaff 260	D. H. Holmes Baton Rouge, La.	339.50	339.50	
Pfaff 260	Maison Blanche New Orleans, La.	339.00	339.00	
Pfaff 260	Barnards Dept. Store Worcester, Mass.	380.00	330.00	
Pfaff 260	Rosenfield Dept. Store Baton Rouge, La.	339.00	299.00	
Lady Kenmore	Sears, Roebuck & Co. Worcester, Mass.			289.95

Exhibit S-90
(Par. 148)

Multiple Cam

Model Name	Retailer	Initial Price	Price At Which Store Willing To Sell	Single Price Specified By Store
Pfaff 260	Interstate Sewing Mch. Co. Peekskill, N.Y.	339.50	289.50	
Pfaff 260	Goldblatt Brothers Chicago, Ill.	339.00	279.00	
Lady Kenmore	Sears Roebuck & Co. Mobile, Ala.	284.50	250.00	
Lady Kenmore	Sears Roebuck & Co. Highland Park, Mich.	284.95	249.95	
Lady Kenmore	Sears Roebuck & Co. Miles, Ill.	249.00	249.00	
Lady Kenmore	Sears Roebuck & Co. New Orleans, La.	254.95	246.95	
Pfaff 260	Goldblatt Bros. Chicago, Ill.	279.00	230.00	
Pfaff 260	Polk Bros. Chicago, Ill.	339.00	229.00	

[fol. 2680]

Exhibit S-91

Exhibit S-91
(Par. 148)

Replaceable Cam

Model Name	Retailer	Initial Price	Price at Which Store Willing to Sell	Single Price Specified by Store
Necchi Supernova Julia	Rosenfield Dept. Store Baton Rouge, La.	$389.95	$389.95	
Necchi Supernova	Samples Sewing Center Inglewood, Calif.			$379.00
Necchi Supernova Mark II	Sew. Mach. Mart Mobile, La.	360.00	360.00	
Necchi Supernova	Signet Sewing Machine Co. Bronx, N.Y.			339.50
Adlermatic 589A	Atlantic Sew. Mach. Co. Huntington Park, Calif.	379.50	329.50	
Adlermatic 989A*	Atlantic Sew. Mach. Co. Huntington Park, Calif.	379.50	329.50	
Necchi Julia	John Leabu Ann Arbor, Mich.			324.00
Necchi Supernova (New Name Julia)	Gramatan Sew. Mach. Co. Mt. Vernon, N.Y.	339.00	319.00	
Necchi Supernova Julia	J. L. Hudson Detroit, Mich.	—	314.30	
Necchi Supernova Julia	J. L. Hudson Detroit, Mich.	350.00	314.00	
Adler 453A*	Atlantic Sew. Mach. Co. Huntington Park, Calif.	359.50	309.50	
Necchi Supernova Ultra Mark II	Rosenfield Dept. Store Baton Rouge, La.	389.95	308.70	
Necchi Supernova Julia	Armand's Appl. Co. Culver City, Calif.	349.00	294.00	

Exhibit S–91
(Par. 148)

Replaceable Cam

Model Name	Retailer	Initial Price	Price at Which Store Willing to Sell	Single Price Specified by Store
Necchi Supernova	Whittier Sewing Machine Detroit, Mich.			293.31
Necchi Supernova Ultra Mark 2	Necchi-Elna Sew. Cir New York, N.Y.	340.00	290.00	
Elna Supermatic D	Necchi-Elna Sew. Cir New York, N.Y.	340.00	290.00	
Necchi Supernova Ultra	Lipscomb's New Orleans, La.	389.50	289.50	
Necchi Nora	Sew. Mach. Mart Mobile, Ala.	289.00	289.00	
Elna Open Arm	John Leabu Ann Arbor, Mich.			289.00
Necchi Supernova Ultra Mark 2	J. L. Hudson Detroit, Mich.	334.00	283.00	
Necchi Supernova Ultra Mark 2	J. L. Hudson Detroit, Mich.	—	283.00	
Necchi Supernova Julia Model 550	Polk Bros. Arlington, Ill.	365.00	274.00	
Necchi Nora	John Leabu Ann Arbor, Mich.			274.00
Necchi Supernova (New Name Julia)	Simplex Appl Co. Worcester, Mass.	260.00	—	
Elna Supermatic (Open Arm)	J. L. Hudson Detroit, Mich.	—	259.21	
Necchi Supernova Mark 2	R. H. White's Worcester, Mass.	354.95	254.94	
Necchi Nora (13 Cams)	Rosenfield Dept. Store Baton Rouge, La.	249.50	249.50	
Necchi Nora	Samples Sewing Center Inglewood, Calif.			235.00
Elna Supermatic (Flat Bed)	J. L. Hudson Detroit, Mich.	—	234.00	
Necchi Nora	Armands Appl. Co. Culver City, Calif.			229.00
Necchi Nora	Whittier Sewing Machine Detroit, Mich.			225.00
Elna Piana	R. H. White's Worcester, Mass.	299.95	219.95	
Necchi Nora	Necchi-Elna Sew. Cir New York, N.Y.	290.00	210.00	
Elna Automatic (Open Arm)	J. L. Hudson Detroit, Mich.	—	204.95	
Elna Automatic C	Necchi-Elna Sew. Cir New York, N.Y.	290.00	200.00	
Necchi Nora	Lipscomb's New Orleans, La.	289.95	199.95	
Elna Automatic (Flat Bed)	J. L. Hudson Detroit, Mich.	—	198.25	
Necchi Nora (13 Cams)	J. L. Hudson Detroit, Mich.	—	198.00	
Necchi Nora	Simplex Appl. Co. Worcester, Mass.	185.00	—	
Adler 189A	Taylor Sew. Mach. Co. Los Angeles, Calif.	290.00	110.00 (slightly used)	

[fol. 2681]

EXHIBIT S-92

(Par. 148)

Manual

Model Name	Retailer	Initial Price	Price At Which Store Willing To Sell	Single Price Specified By Store
Pfaff 360-6	Bernard Dept. Store Worcester, Mass.	$439.50	$359.50	
Pfaff 259	Barnard Dept. Store Worcester, Mass.	330.00	—	
Pfaff 360-6	Hammels Dept. Store Mobile, Ala.	289.00	280.00	
Pfaff 259	Hammels Dept. Store Mobile, Ala.	289.00	289.00	
Adler 200	Atlantic Sewing Machine Co. Huntington Park, Calif.	269.50	—	
Necchi B.U.	Sewing Machine Mart Mobile, Ala.	258.00	258.00	
Pfaff 229	Interstate Sewing Machine Co. Peekskill, N.Y.	289.50	239.50	
Pfaff 259	Suppe's Huntington Park, Calif.	319.00	219.00	
Pfaff 130	Sun Stores Worcester, Mass.	259.50	200.00 (with trade-in)	
Elna Zigzag	Necchi Elna Sewing Circle New York, N.Y.	229.00	179.00	
Veritas Zigzag 8014/Z	Advance Sewing Center New Orleans, La.	179.00	179.00	
Pfaff 139	Maison Blanche Dept. Store New Orleans, La.	269.95	169.95	
Remington 132	Sew. Mach. Services Store Culver City, Calif.	185.00	160.00	
Elna Zigzag	Simplex Appliance Co. Worcester, Mass.			$160 00
Elna Zigzag (Open Arm)	J. L. Hudson Detroit, Mich.	—	149.88	
Elna Zigzag (Flat Bed)	J. L. Hudson Detroit, Mich.	—	145.30	

[fols. 6117-6133] IN UNITED STATES DISTRICT COURT,
SOUTHERN DISTRICT OF NEW YORK

Civil Action No. 154-108

UNITED STATES OF AMERICA, Plaintiff

v.

THE SINGER MANUFACTURING COMPANY, Defendant

PLAINTIFF'S PROPOSED FINDINGS OF FACT AND CONCLUSIONS OF LAW

• • • • • • •

Description of the Defendant

[fol. 6134] 59. Singer and Gegauf entered into a non-exclusive royalty-free patent cross-licensing agreement on April 14, 1956. It related to the Singer-owned Harris United States Patent No. 2,693,778, the United States Harris Reissue Application No. 516,059 and nine corresponding foreign patents and patent applications; and to the Gegauf-owned United States Application No. 358,377 and four corresponding foreign patents and applications.

[Govt. Ex. 26]

60. By this agreement of April 14, 1956 Gegauf undertook not to attack Singer, directly or indirectly, in any country on the basis of its said patents or patent applications. Singer undertook not to attack Gegauf, directly or indirectly, in any country, a) on the basis of its said patent or patent applications which were the subject of the agreement or, b) for the existing construction of the Bernina sewing machine. This agreement was signed by M. L. Waterman, a vice president of Singer and Fritz Gegauf, Sr. of Gegauf.

61. By virtue of this agreement, Singer and Gegauf cross-licensed each other's royalty-free and Singer eliminated the possibility of Gegauf interfering with the defendant's manufacture or marketing of the 319 and 401 machines in any country of the world.

[Dft. Ex. 31, p. 6; Govt. Exs. 26, 36; Dft. Ex. 35, p. 3, par. 1]

62. This agreement also provided that neither party would do anything in any country the result of which might restrict the scope of the claims of the other.

[Govt. Ex. 26, par. 1] [This particular subject matter is covered with more significant detail in subsequent Findings 219-234]

. . . . . .

[fols. 6135-6147] 64. Thus, as of April 1956, by virtue of the aforesaid patent agreements between Singer and Vigorelli; Vigorelli and Gegauf; and Singer and Gegauf, all of the parties had agreed not to oppose the patent claims of the other in relation to the machine-carried multiple cam machines and each had granted patent licenses to the others.

. . . . . .

[fol. 6148] 113. The defendant and Gegauf entered into an unwritten agreement and understanding, as exemplified by all of the aforesaid facts, the principal term of which was that Gegauf would assign its United States patent applications to the defendant, and that the defendant would use the patents resulting therefrom, in conjunction with patents resulting from its own United States applications, [fols. 6149-6152] to exclude competition from persons in the United States dealing in Japanese-made machine carried multiple cam machines.

114. The patents that were the subject of this conspiracy were those resulting from the Gegauf United States patent applications that were assigned to Singer; and those that were to issue from Singer's United States applications, viz. the "Johnson," "Perla" and "Harris" reissue applications.

[Govt. Ex. 44, 1st pg., 2nd par.; Govt. Ex. 66, attached letter of Gegauf, 2nd pg., 1st full par.; 3rd sent.; Govt. Ex. 199, handwritten notes on last page]

. . . . . .

[fol. 6153] 123. During the period that Singer was developing its machines, filing patent applications and search-

ing for patent applications of others, it was concerned with obtaining such patent rights from others as would permit it to manufacture and sell its "401" and "319" machines free from patent infringement suits by others, and free of the necessity of paying any patent royalties. However, following the procurement of such patent protection by virtue of license agreements, Singers interest changed to one of excluding competition and with that intent and purpose it engaged in purchasing full rights to patents or patent applications under which it had already been licensed.

[fols. 6154-6157] [Dft. Ex. 45, 2d par. of attached report]

* * * * * * *

[fols. 6158-6177] 139. The defendant decided that if it did not so succeed in inducing Gegauf to refuse licenses to other European manufacturers, it would then try to get Gegauf to limit any such license to a modest number of machines, thereby permitting the defendant to control the flow of imports of the machine-carried multiple cam machines by keeping it down to what it considered to be a modest number of machines or, if it saw fit, by granting a license for a royalty fee.

[Govt. Ex. 57, p. 2 of attached memorandum, 1st full par.]

* * * * * * *

[fol. 6178]. 227. The written agreement of April 14, 1956 between Singer and Gegauf was prepared by employees of [fols. 6179-6194] Singer, namely, Mr. Stanford and Mr. Kircher and, as well as providing for the cross-licensing of the pending patent applications of each, also provided:

> Singer and Gegauf each undertake not to do anything, either directly or indirectly and in any country, the result of which might restrict the scope of the claims of the other party relating to the subject matter of the [subject patents and patent applications.]

[Govt. Ex. 26, p.2; Tr. 1026, 1029]

228. By virtue of this agreement Singer and Gegauf each agreed that the United States interference between them would be settled merely by determining which one of the parties was prior to the other and that such party would be awarded the claims. It was agreed that neither party would seek to narrow, restrict, or hold unpatentable the claims of the other.

[Govt. Ex. 16, p.2, line 4 to p.3, line 20; Govt. Ex. 41, p.1, par.2, to p.2, line 5]

. . . . . .

[fol. 6195] [File endorsement (omitted)]

IN UNITED STATES DISTRICT COURT, SOUTHERN DISTRICT OF NEW YORK

Civil Action No. 154-108

UNITED STATES OF AMERICA, Plaintiff

v.

THE SINGER MANUFACTURING COMPANY, Defendant

PLAINTIFF'S MEMORANDUM RELATIVE TO DEFENDANT'S PROPOSED FINDINGS—September 20, 1961

. . . . . .

The Government has made no contention that the cross-licensing was unlawful. It was after the defendant had acquired royalty-free patent rights that it entered into the conspiracy alleged and attempted to monopolize by acquiring full title to the patents or patent applications under which it had already been licensed.

The only phase of the cross-licensing agreements which the Government does contend was unlawful, is the provision in the defendant-Gegauf agreement of April 14, 1956 by which the parties agreed not to do anything directly or [fols. 6196-6244] indirectly, in any country the result of

which might restrict the scope of the patent claims of the other party. Although this provision was included in a cross-licensing agreement, the Government contends that it was not ancillary thereto and that it is, in and of itself, in violation of the Sherman Act.

. . . . . .

[fols. 6358-6422] IN UNITED STATES DISTRICT COURT,
SOUTHERN DISTRICT OF NEW YORK

Civil Action No. 154-108

UNITED STATES OF AMERICA, Plaintiff

v.

THE SINGER MANUFACTURING COMPANY, Defendant

PLAINTIFF'S POST TRIAL BRIEF

* * * * * * *

[fols. 6423-6458] III. The Singer-Gegauf Agreement of April 14, 1956 is Unlawful in Itself and Violates Sections 1 and 2

The Singer-Gegauf agreement of April 14, 1956 contains express provisions in which the parties agreed not to do anything which might restrict the scope of the patent claims of each other. This agreement was designed to permit the parties to obtain the broadest patents possible and, in addition to furthering both the conspiracy and the attempt to monopolize, it is, of and in itself, unlawful and violates both Sections 1 and 2 of the Sherman Act.

The provision which is unlawful reads:

> Singer and Gegauf each undertakes not to do anything either directly or indirectly and in any country, the result of which might restrict the scope of the claims of the other party relating to the subject matter of the [patents and patent applications which are the subject of the agreement]. [Govt. Ex. 26, p. 2]

This provision, as a matter of law, violates the Sherman Act, *infra*. Its full meaning and import are apparent from the circumstances surrounding the agreement.[8]

* * * * * * *

---

[8] The question as to whether this contract is unlawful need not be considered if the overall conspiracy or attempt is found to exist. *United States* v. *Imperial Chemical Industries, Ltd.*, 100 F.Supp. 504 (S.D.N.Y. 1951).

[fols. 6759-6760] IN UNITED STATES DISTRICT COURT, SOUTHERN DISTRICT OF NEW YORK

Civ. 154-108

UNITED STATES OF AMERICA, Plaintiff,

v.

THE SINGER MANUFACTURING COMPANY, Defendant.

AMENDED AND CORRECTED OPINION OF SYLVESTER J. RYAN, C.J.—May 11, 1962

LEE LOEVINGER, Esq., Assistant Attorney General, Department of Justice, Washington, D. C., for plaintiff (Lewis Bernstein, John J. Galgay, Richard B. O'Donnell, John D. Swartz, William J. Elkins, Les J. Weinstein, Edward F. Corcoran, James J. Farrell, Jr., Esqs., of counsel).

WINTHROP, STIMSON, PUTNAM & ROBERTS, Esqs., New York, New York, for defendant (Arthur E. Pettit, Allen T. Klots, Edwin J. Wesely, Terence H. Benbow, Neil F. Twomey, Edward A. Miller, Richard J. Riker, Chester A. Williams, Jr., Esqs., of counsel).

. . . . . .

[fol. 6761] RYAN, *C.J.*:

This civil antitrust suit was filed by the United States of America under Section 4 of the Sherman Act to prevent and restrain alleged violations by the defendant of Sections 1 and 2 of the Act. The suit concerns only the United States trade and commerce arising from the importation into the United States of a particular type of household sewing machine known as the "machine-carried multi cam zigzag machine." Many of the relevant and material facts were stipulated by the parties prior to trial following extensive informal hearings held with counsel. The very competent senior attorneys and the junior associates appearing both for the Government and for the defendant gave evidence of their great ability, conscientious application and industry, and zealous advocacy. They were most

cooperative and helpful; for this, they have the thanks of the Court.

[fol. 6762] I. The Issues Presented

The complaint alleges that, beginning in at least 1956 and continuing up to December 22, 1959, the date of the filing of the complaint, the defendant and the alleged co-conspirators had been engaged in an unlawful combination and conspiracy to restrain and monopolize; and that the defendant had unlawfully attempted to monopolize interstate and foreign trade and commerce in the importation, sale and distribution of household automatic zigzag sewing machines.

The acts alleged to have been committed by the defendant pursuant to the alleged conspiracy and attempt are: (1) the acquisition by the defendant from the alleged co-conspirator Gegauf of two United States patent applications covering automatic zigzag sewing machines; (2) the making of separate agreements with the alleged co-conspirators Gegauf and Vigorelli to insure the granting, with respect to specified patents, of the broadest possible patent claims to each other for the purpose of excluding foreign automatic zigzag sewing machines; (3) the filing of infringement suits and proceedings before the Tariff Commission by the defendant asserting the patent rights assigned to it by Gegauf in conjunction with its own patent rights to exclude the importation into the United States of automatic zigzag sewing machines of foreign manufacture; (4) the action by defendant, in conjunction with the alleged co-conspirators, determining what European manufacturers would be permitted to export foreign made automatic zigzag sewing machines to the United States; and (5) the making by the defendant of a non-aggression cross-licensing agreement with Messerschmitt and the subsequent acquisition by the defendant of the United States Messerschmitt patent application, which was the subject of the cross-license agreement, for the purpose of excluding foreign made automatic zigzag sewing machines.

[fol. 6763] The Government does not charge that the acquisition by Singer of three other United States patents—the Harris reissue, Johnson, and Perla, which are later discussed—was unlawful. On the contrary, it concedes

that they were lawfully acquired. It is the acquisition of these two Gegauf United States patents, known as Gegauf No. 1 and No. 2, which is claimed by the Government to be unlawful. It is contended that they were acquired by Singer pursuant to the alleged conspiracy and with a purpose to use them in conjunction with the above three lawfully acquired patents to exclude competition. The Government also contends that the Singer "401" machine was fully protected under a Gegauf license and the Johnson patent.

From these acts, it is alleged, have flowed the following results: (1) United States importers, distributors and retailers, dealing in household automatic zigzag sewing machines of foreign manufacture, have been precluded from importing, distributing and selling these machines in a market free from unlawful restraints; (2) defendant has been able to acquire and maintain a position of domination and control in the manufacture, sale and distribution of household automatic zigzag sewing machines in the United States; and (3) consumers have been deprived of the opportunity of purchasing household automatic zigzag sewing machines in a free and competitive market. To dissipate these effects, the Government prays that the defendant be enjoined from continuing to carry out the alleged conspiracy and attempt to monopolize and from using its patents and patent rights to effectuate the alleged conspiracy.

The main thrust of the defense lies in the contention that all the complained-of activities of Singer were lawful and were done to accomplish a lawful purpose. Defendant maintains that they were initiated and carried out solely to insure Singer's ability to lawfully protect the manufacture [fol. 6764] and sale of its "401" sewing machine in the United States and of its "319" sewing machine outside the United States.

The specific issues presented are: (1) Was there an unlawful conspiracy among the alleged conspirators to restrain or exclude competition in the trade and commerce involved?; (2) Did Singer attempt to monopolize this trade and commerce?; and (3) Were the agreements entered into between the parties or any of their provisions *per se* violations of Sections 1 or 2 of the Sherman Act?

The Government did not call any witnesses on its case in chief; it called four witnesses on rebuttal; it offered in evidence 210 exhibits, documentary and physical, during the trial. Defendant called ten witnesses on its case in chief and two in rebuttal; it offered 202 documentary and physical exhibits. After consideration of all this evidence, we make the following findings of fact.

II. Findings of Fact

A. Description of defendant and of others

The sole defendant named is The Singer Manufacturing Company (hereinafter Singer), a New Jersey corporation with its principal place of business in this district. Singer manufactures household sewing machines, including machine-carried multi cam zigzag sewing machines, which are particularly involved in this suit. It sells these machines in the United States through a wholly-owned subsidiary, the Singer Sewing Machine Company, and in various foreign countries through independent distributors.

The alleged con-conspirators named in the complaint are:

Fritz Gegauf, A.G., Bernina Nahmaschinen Fabrik (hereinafter Gegauf), a Swiss corporation with its principal place of business in Steckborn, Switzerland. Gegaulf manu- [fol. 6765] factures household sewing machines in Switzerland, including automatic zigzag sewing machines, and exports some of these machines to various countries including the United States.

Arnaldo Vigorelli, S.p.A. (hereinafter Vigorelli) is an Italian corporation, with its principal place of business in Pavia, Italy. Vigorelli manufactures household sewing machines in Italy, including automatic zigzag sewing machines, and exports some of these machines to various countries, including the United States.

Although not named as an alleged co-conspirator, there was some evidence presented concerning Messerschmitt, A.G. with whom Singer at times had patent negotiations and dealings. Messerschmitt is a German corporation, engaged in the manufacture and sale of household sewing machines, including zigzag sewing machines.

B. A brief description of household zigzag sewing machines and their operation

Some sewing machines are designed and sold for use principally by housewives for personal and family sewing needs; other machines are produced to meet the requirements of industrial and commercial use. The straight stitch type of household sewing machine comprises three basic devices, namely, a thread-carrying needle which reciprocates in a vertical direction but does not move transverse to the direction of the work feed; a looptaker which, cooperating with the needle, forms a straight line of stitches; and a mechanism which feeds the work to be stitched between such needle and looptaker. These three devices are driven in synchronism by an electric motor or by an operator using a treadle, handcrank, or similar mechanism. The speed of the machine, the length of the stitches and the direction of the feed may be varied by the operator.

[fol. 6766] The zigzag stitch machine has all of the features and functions of a straight stitch machine and may be operated as a straight stitch machine. In addition, the needle may be shifted back and forth laterally of the normal direction of the work feed, from zero to maximum, within the field of lateral throw of the needle, from a fixed neutral position of nonvibration in the center of such field of throw, so as to produce stitches that follow a zigzag path. The size and shape of the pattern of the zigzag stitch may be altered by varying the amplitude of the lateral needle movements and the amplitude and/or direction of the work-feeding movements. Mechanism may be provided for fixing a neutral position of nonvibration of the needle at either the center or at either side of the field of the lateral throw of the needle and for controlling the lateral throw of the needle within such field, from zero to maximum, either across a center line through such field or from either side of such field. Mechanism may also be provided, whereby the needle can be laterally vibrated through predetermined patterns of movement modifying the zigzag stitch path, with the result that stitches may be made having various ornamental configurations other than plain zigzag.

There are three general types of household zigzag sewing machines:

1. The manually-operated zigzag machine—a household sewing machine which, in addition to straight stitches, produces continuous plain zigzag stitches and, by manual manipulation, during the operation of the machine, of a handle or lever located on the exterior of the machine, will also produce various ornamental and functional zigzag stitch patterns.

2. The Replaceable Cam ZigZag Machine—a household sewing machine which, in addition to straight stitches, pro- [fol. 6767] duces without any artistry on the part of the operator, various ornamental and functional zigzag stitch patterns, the preselection of which must be made by the user through the manual removal from the machine of one or more cams and the manual replacement of such cam or cams by one or more substitute cams having cam configurations different from the replaced cams.

3. The Machine-Carried Multiple Cam Zigzag Machine—a household sewing machine which, in addition to straight stitches, produces without any artistry on the part of the operator, various ornamental and functional zigzag stitch patterns, the preselection of which must be made by the user through a device such as a dial, handle or knob, located on the exterior of the machine, which affects a relative shifting of cam tracking means and a group of machine-carried cams, each having cam configurations different from the other cams.

To properly and efficiently operate any household sewing machine, including a zigzag stitch machine, the machine must first be equipped with needle and bobbin threads. Three adjustments must be made to insure that the machine will sew with the requisite thread tension, stitch length and work pressure. During the operation of the machine, the operator must synchronize the speed of the machine to the feed of the material sewn to insure that the stitches will be formed in the desired area of the work material.

With each of the three general types of household zigzag sewing machines the operator must in addition make a pre-

selection through a control device determining the width of the zigzag stitch to be produced. With a manually operated machine the zigzag stitch pattern may be varied by the manual manipulation of the stitch width control during machine operation, the results obtained varying with the [fol. 6768] artistry and skill of the operator. With the replaceable cam and machine-carried multiple cam machines the zigzag stitch pattern is predetermined by the configuration of the particular cam used, which cam in each instance is selected by the operator, by, in the case of the replaceable cam machine, the manual replacement of one cam with another cam and, in the case of the machine-carried multiple cam machine, by the manual use of a dial, handle or knob to select one of a plurality of machine-carried cams.

Multicam, replaceable cam and manually operated zigzag sewing machines are not necessarily of corresponding quality, either as compared with zigzag sewing machines of the same type or as compared with zigzag sewing machines of a different type. A relatively high priced manually operated machine may be of superior quality to a relatively low priced multicam machine, a relatively low priced replaceable cam machine, or a relatively low priced manually operated machine. The price of the machine, regardless of type, in part depends upon the attachments or appurtenances which may or may not be part of such machine, and other factors. Thus, the price may be influenced, as with other commercial products by the reputation of the manufacturer, the availability of service and parts, the available financing arrangements, the instructions as to the use of the sewing machine, type and extent of guarantee, cost of manufacture and distribution, the location and type of shop at which the machine is hold, and the promotion and advertising expenditures.

C. Description of the patents

There are five United States patents and one United States patent application which the Government contends are relevant to the wrongful acts charged. Each of these patents and the one patent application is owned by Singer;

[fol. 6769] each discloses a machine carried multicam sewing mechanism. They are as follows:

1. GEGAUF PATENT No. 2,832,302—application filed May 29, 1953 and patent issued April 29, 1958 (called in this suit Gegauf I).

2. HARRIS REISSUE PATENT No. RE. 24,370—original Harris Patent No. 2,693,778 issued to Carl Harris on November 9, 1954. Harris Reissue Patent application filed June 16, 1955 and reissue patent issued October 8, 1957.

3. JOHNSON PATENT No. 2,862,468—application filed November 29, 1954 and patent issued December 2, 1958.

4. PERLA PATENT No. 2,810,360—application filed December 8, 1954 and patent issued October 22, 1957.

5. GEGAUF PATENT No. 2,877,726—divisional application filed December 2, 1957 and patent issued March 17, 1959 (called in this suit Gegauf II).

6. MESSERSCHMITT APPLICATION No. 548,481—application filed November 22, 1955.

1. Gegauf No. I—Patent No. 2,832,302

This patent claims the concept, *inter alia*, of a mechanism comprising a series of rotary cams having a common axis and a single retractable cam follower, shiftable relative to each other lengthwise of the common cam axis, in order to select a particular cam, but only one cam at a time, for controlling the lateral needle movement. Such a mechanism can produce only as many different zigzag stitch patterns as it has cams, i.e., one for each cam. The Government stipulated that the Singer 401 machine is covered by this patent.

2. Harris Reissue Patent No. Re. 24,370

Reissue Claims 1 through 4 allowed in the Harris Reissue Patent were also allowed in the original Harris Patent No. [fol. 6770] 2,693,778; these claims do not relate to a multicam mechanism. Eight proposed reissue claims were rejected by the Patent Office. This resulted in a series of amendments, substitutions and rejections of claims until, on

May 16, 1956, Singer substituted Claim 22, a limited version of the original Application Claims 5, 7 and 8 taken in combination. On August 22, 1956, this substituted Claim 22 was placed in interference with the United States Gegauf patent application Serial No. 358,377, but subsequently it was allowed by the Patent Office as Claim 1 in Gegauf patent (Gegauf I) No. 2,832,302, issued April 29, 1958. All other substituted claims placed in the reissue application were rejected except Claims 23, 24 and 25; these three substituted claims were allowed in Harris Reissue Patent No. Re. 24,370 as Reissue Claims 5, 6 and 7.

Harris reissue allowed Claim 5 includes the limitation, *inter alia*, of a series of rotatable cams having a common axis with each cam being shiftable lengthwise of the common cam axis with respect to the cam follower in order to select a particular cam. Harris reissue allowed Claim 6 includes the limitation, *inter alia*, of a series of rotatable cams having a common axis and a cam follower shiftable relative to each other, lengthwise of the common cam axis, in order to select a particular cam, used in combination with a constantly rotatable cam. Harris reissue allowed Claim 7 includes the limitation, *inter alia*, of a series of rotatable cams having a common axis and a cam follower shiftable relative to each other lengthwise of the common cam axis, in order to select a particular cam used in combination with a particular type of cam follower retracting means.

The parties have stipulated that Harris Reissue Patent No. Re. 24,370 discloses a machine which is covered by Claim 1 of Gegauf Patent No. 2,832,302 (Gegauf I).

[fol. 6771] 3. Johnson Patent No. 2,862,468

This patent claims a concept, *inter alia*, of a mechanism comprising a stack of rotary cams and two cam followers, either of which can track any one cam or in combination can track any two cams simultaneously whereby information from such cam or cams can be utilized to control the lateral movements of the needle. Thus, as the Johnson mechanism has the ability to take information from two cams and combine that information to develop a stitch, it can produce a number of zigzag stitch patterns which far exceeds the number of cams.

4. Perla Patent No. 2,810,360

This patent claims the concept, *inter alia*, of a mechanism comprising a series of rotary cams with each cam being provided with its own cam follower constrained to engage its associated cam only and with each cam follower being provided with its own individual handle so that each follower can be manually thrown in and out of operative engagement with its associated cam. The cam followers may be used singly to track one cam or in combination to track and combine intelligence from any two cams whereby the information from such cam or cams is utilized to control the lateral movement of the needle.

5. The Gegauf No. 2—Patent No. 2,877,726

The Gegauf No. 2 patent claims the concept, *inter alia*, of a mechanism comprising a series of rotary cams with each cam being provided with its own cam follower constrained to engage its associated cam only, whereby any cam, but only one cam at a time, may be individually selected for controlling the lateral needle movement. Thus, the Gegauf II mechanism can transmit information from any one cam at a time but cannot combine intelligence from two or more cams.

[fol. 6772] 6. Messerschmitt Application No. 548,481

The Messerschmitt application claimed, *inter alia*, the concepts of (a) a series of rotary cams with each cam being provided with its own cam follower constrained to engage its associated cam only, whereby any such cam may be individually selected for controlling the lateral needle mechanism and with each cam follower provided with its own individual handle, so that each follower can be manually thrown into and out of operative engagement with its associated cam; and (b) a series of rotary cams with each cam being provided with its own follower to control the work feed by a selected cam. The concept set forth in (a) is the same concept claimed in the Singer United States Perla patent.

D. Introduction of zigzag sewing machines into United States and the development of Singer's 306, 319 and 401 machines

Users of industrial sewing machines, both in the United States and abroad, employed zigzag sewing machines prior to 1900. The known art at that time is illustrated by Leilich United States Patent No. 386,252, issued July 17, 1888, which disclosed an ornamental zigzag stitch sewing machine. This machine had two replaceable cams—one imparted lateral zigzag movement to the needle; the other controlled the amplitude of the work-feeding movement; these cams could be replaced by other cams giving the operator a choice of ornamental stitches.

The first Singer zigzag stitch sewing machine manufactured especially for use in the home was the model "206" machine; importation and sale of this machine in the United States commenced in 1951. The "206" machine was manufactured by Singer in its German plant under its Tiesler patent from approximately 1934 to the opening of World [fol. 6773] War II; later, commencing in 1949, similar machines were manufactured in the Singer factory in Scotland.

The "206" was of the manually operated zigzag type with built-in rotating cam; it did not have the replaceable cam of the earlier Leilich. In the "206", by manual manipulation during the stitching cycle the throw of the cam could be modified and the amplitude of the zigzag stitch varied.

In 1948 shipments of an Italian made "Necchi" zigzag stitch machine (manually operated) first came to the United States. The sales of these "Necchi" machines commercially demonstrated by 1951 that a definite market in a household type zigzag sewing machine existed in the United States. The "Elna" zigzag machine (replaceable cam) was introduced in the United States in 1952. This machine, as the Leilich machine, had two rotary cams and two cam followers. The two cams of the "Elna" machine were replaceable by other cams so that a number of stitch patterns could be produced.

Ralph E. Johnson, a member of Singer's Experimental Department in the Elizabethport, New Jersey plant, commenced work on the development of a household zigzag machine and completed a design of a new machine on April

29, 1953. This design is embodied in the Singer Class 401 machine. The Class 401 machine (machine-carried multiple cam) incorporates a stack of rotary cams and a pair of cam followers, movable lengthwise of the axis of the cam stack, either of which can track any one cam or in combination can track any two cams, whereby information from such cam or cams can be utilized to control the lateral movements of the needle. The Class 401 machine is disclosed in the Johnson U. S. Patent No. 2,862,468 (*supra*). The design of the Class 401 machine required the manufacture of a new sewing machine. It took Singer four years to develop and to produce the necessary manufactur- [fol. 6774] ing and assembly tools so as to permit manufacture of the machine in an efficient and economical manner. The Class 401 machine was placed on the market in June 1957.

On March 9, 1953 Martin R. Perla and Edward Koenig, members of Singer's Experimental Department in Bridgeport, Connecticut plant, were directed to design and develop an improved Class 206 machine, which was to incorporate a replaceable cam. The design of this machine was completed by March 25, 1953 and is embodied in the Singer Class 306 machine (replaceable cam). This design eliminated the cam of the Class 206 machine and superimposed on such machine a zigzag mechanism having a rotary removable cam, otherwise leaving the Class 206 machine substantially in its then existing form. Manufacture and sale of this Class 306 machine was started in the United States and abroad in 1954 and a substantial number of said machines were sold in the United States until 1956 when manufacture, but not sale, of it in the United States was stopped and manufacture of a new Class 319 machine was commenced both abroad and in the United States. The Class 306 machine continues to be manufactured and sold abroad.

On April 1, 1954, Martin R. Perla was also directed to design and develop an improved Class 306 machine, which incorporated a multiple cam arrangement in lieu of the replaceable cam of the Class 306 machine. This design was incorporated in the Singer Class 319 machine. The Class 319 machine (machine-carried multiple cam) incorporates a built in stack of cams, each with its own follower. The cam followers may be used singly or in combination to track

one or more selected cams, and to combine intelligence from two or more cams, whereby the information from such cam or cams is utilized to control the lateral move-
[fol. 6775] ments of the needle. The Class 319 machine is disclosed in the Perla Patent No. 2,810,360 (*supra*). The production of this machine was commenced on November 18, 1955 and it was put on sale in 1956, both in the United States and abroad. Manufacture of the Class 319 machine was discontinued in the United States in 1957 when it was superseded by the Class 401 machine. The Class 319 machine continues to be manufactured and sold abroad.

In September 1953, the Italian firm of Vigorelli introduced in the United States a multi-cam zigzag stitch sewing machine. The Vigorelli machine incorporated a unitary stack of removable rotary cams, a single cam follower, movable lengthwise of the axis of the cam stack, for tracking any one of such cams, and means for transmitting the motion of the follower to the needle. This involved two ideas. The first idea comprised the concept of utilizing, in combination, a replaceable cam, a cam follower and a means to transmit the motion of the cam follower to the needle bar for the purpose of controlling the lateral needle vibration, in accordance with the shape of the cam, which motion transmitting means included a manually operable mechanism for adjusting and varying the amplitude of such lateral needle vibrations and for determining the neutral position of non-vibration of the needle. This idea was incorporated in the Singer 306 design. The second comprised the concept of utilizing, in combination, a plurality of cams, cam following means and means to transmit the motion of the cam following means to the needle bar for the purpose of controlling the lateral needle vibration in accordance with the shape of any cam, which motion transmitting means included a manually operable mechanism for engaging the cam following means with any one of the cams. This idea was incorporated in the Singer 319 and 401 designs.

[fol. 6776] The first Japanese-made multi-cam zigzag stitch machine was introduced in the United States in September 1954 by Brother International Corporation. This machine, as the Singer 401 and the Vigorelli machine, incorporated a plurality of rotary cams and a single cam follower which could be engaged with any one of the cams

for laterally vibrating the needle through a predetermined pattern of movement.

In April 1955, Singer first learned that Vigorelli had introduced into the United States a modified form of its multi-cam machine. This modified form differed from the first machine in that in the modified form the single cam follower was adapted not only to engage any one of the cams but in addition to engage any two adjacently disposed cams, which provided an additional variety of ornamental stitches. This idea of taking information from two cams at the same time was embodied in the Singer "401" and "319" machines.

E. The sewing machine industry in the United States and Singer's position in it

Directly after World War II household straight stitch sewing machines were manufactured in the United States by White Sewing Machine Corporation, Free Sewing Machine Company, Inc., The Bell Manufacturing Corporation, Burtman Electric Company, Gelman Manufacturing Company, Inc., and The New Process Gear Company, as well as defendant Singer. By 1959, with the exception of The New Process Gear Company, which manufactures only straight stitch sewing machines on specifications and orders from a single domestic customer, defendant Singer was and now is the sole manufacturer of all household sewing machines made in the United States.

During the period 1948 to 1959, importations of household sewing machines, including zigzag machines, from Japan [fol. 6777] grew from 3,000 machines to 1,100,000 machines; and importations from Europe from 2,500 to 100,000. The only sale and distribution in the United States of sewing machines, including zigzag machines, other than those of defendant and New Process Gear Company, are of machines imported into the United States.

White Sewing Machine Corporation discontinued its manufacturing operations in the United States in 1956. According to the White annual report published for the year 1957: Both White and Sears Roebuck & Company had been fighting a side by side but losing battle, over the preceding five or six years, in trying to sell White's lines of sewing machines made in the United States in competi-

tion with foreign-built imports. When Sears discontinued selling the White machines and started importing machines for distribution by Sears, it was obvious that White had no chance of supporting its sewing machine manufacturing facilities. Confronted with this situation, the White management decided to have its lines of sewing machines produced for it in Japan and Germany, and to dispose of its principal sewing machine manufacturing facilities.

Most of the sewing machines, including zigzag sewing machines, imported from Europe are complete machines, consisting of head (mechanism of machine), motor, wiring, lights, equipment and appurtenances. Those imported from Japan prior to 1959 consisted only of the "head"—that is, the mechanism of the machine. In 1959, Brother and in 1960 Transworld Industries, two of the largest Japanese importers, began importing heads to which there had been added in Japan the motor, lights and wiring. To the head there is added in the United States, by importers or distributors, carrying cases, cabinets, equipment and appurtenances and, where not already so equipped, motor, wiring and lights. Indeed, some of the various items may also be [fol. 6778] imported into this country. The assembled units are distributed principally through (1) department stores and mail-order houses, which order directly from distributors or factories in Japan or from distributors in the United States, and (2) wholesale distributors who import the machines directly or purchase them from importers and sell them to retail dealers. Some of these wholesale distributors, including Brother and New Home, two of the largest distributors, are subsidiaries of the two largest Japanese manufacturers and the sole distributors for particular Japanese manufacturers.

Most of the retail dealers of imported Japanese and European zigzag machines thoughout the United States determine and fix their own list prices for machines handled by them and the actual prices at which they sell such machines, with the result that the same machine may have different list prices and may be sold at different prices in different shops. The price at which such a machine may be sold is generally determined by bargaining at the dealer's shop, and may be sold at the list price or for an amount off the list price. Dealers' list prices for a particular European-

made zigzag sewing machine do not differ as much as dealers' list prices for a particular Japanese-made zigzag sewing machine. Generally, a customer can bargain a greater amount off list price for Japanese-made machines than can be bargained off list price for European-made machines. List price includes those prices that a retailer might quote to a customer for the purpose of presenting some price and the actual selling price may be substantially reduced.

The defendant Singer presently manufactures household straight stitch, replaceable cam and machine-carried multiple-cam zigzag stitch sewing machines in the States of New Jersey and South Carolina. Singer distributes them [fol. 6779] in the various states of the United States through its wholly-owned subsidiary, Singer Sewing Machine Company, which operates about 1600 retail stores throughout the United States. The principal portion of the Singer sales in the United States are through these retail stores. In addition, leased outlets are operated by Singer Sewing Machine Company in approximately 80 department stores located in various states. It also sells at wholesale to approximately 270 independent retail stores, which market all three types of zigzag machines. Singer also sells household sewing machines, including all three types of zigzag machines, in various foreign countries of the world through its own and independent distributors, who operate thousands of retail stores in such countries. Singer owns and operates plants manufacturing various types of machines in 14 foreign countries.

Singer also offers financing for the purchases of its machines; provides servicing of the machines; and conducts sewing classes in their use. We noted also that Singer cuts its own logs for use in making its cabinets.

In the years 1956, 1957, 1958 and 1959, Singer sold in the United States the number of units of the Singer 306 and 403 replaceable cam zigzag machines and of the Singer 319 and 401 multiple cam machines below set forth:

	Model No.	1956	1957	1958	1959
Foreign mfg.—	306	48,014	19,308	9,927	13,308
U.S. mfg.—	403	not in existence			50,269
	319	56,965	31,838	4,199	1,028
	401		74,503	147,446	155,422

We have observed (*supra*) that the manufacture by Singer in the United States of the Singer 319 machine was commenced, and of the 306 machine was stopped, in 1956. Of the Class 306 machines above set forth the following [fol. 6780] number thereof had been manufactured in the Singer Clydebank, Scotland plant (where they continue to be manufactured): 1956, 20,707; 1957, 17,708; 1958, 9,927 (all); 1959, 13,308 (all). All other machines above set forth, except 138 of the Class 319 machines, had been manufactured in the United States. In the years 1958 and 1959 Singer's dollar volume of sales of the 401 machine amounted to $44,233,800 and $46,626,600 respectively, approximately 45% of its total gross dollar sales of all models of household sewing machines in the United States for each year.

Singer's Class 401 multi-cam zigzag sewing machine, with carrying case, sells at retail in the United States at $340. Singer's Class 306 and 403 replaceable cam zigzag sewing machines, with carrying cases, sell at retail in the United States at $202 and $280, respectively. Singer's Class 206 manual zigzag sewing machine, with carrying case, sale of which terminated in 1958, sold at retail in the United States in 1958 at $202.

With the Singer machines, there is no bargaining about price in an outright sale. The Singer 401 was introduced to the market in 1957 over 1½ years before the 403; it was supported with a vigorous and expensive advertising campaign: Singer spent in advertising the 401 machine approximately $2,145,000.00 in 1957; $1,270,000.00 in 1958; $1,340,000.00 in 1959; and $1,399,000.00 in 1960. It was vigorously pushed by salesmen, being the top-of-the-line or most expensive sewing machine, and the salesman's commission was computed on the basis of the sale price of the sewing machine. The Singer 403 machine was put on the market in April 1959 and Singer spent in advertising this sewing machine approximately $545,000.00 in 1959 and $120,000.00 in 1960. The Singer 404 machine was put on the market in January 1959 and Singer spent in advertising this sewing machine approximately $585,000.00 in 1959 and [fol. 6781] $130,000.00 in 1960. Notwithstanding the greater effort and expense in promoting and advertising the Singer 401 and its earlier appearance on the market, the sales of both the 403 and 404 machines have had substantial in-

creases, whereas the sales of the 401 have shown little change. In its advertising, Singer presented its 401, 403 and 404 machines as being a group of three sister sewing machines, all of which would perform substantially the same function.

It is against this background that we turn to examine the various agreements which, according to the Government, evidence the conspiracy to exclude competition in automatic zigzag sewing machines of foreign origin, in particular, of Japanese origin.

F. The alleged conspiracy to restrain and monopolize trade

1. The Agreements Challenged

a. Singer Vigorelli cross license agreement

During the period of the development of the Class 306, 319 and 401 machines, respectively, Singer commenced investigations to determine if Singer were free, from a patent standpoint, to manufacture and market these machines in the various countries of the world. This investigation to insure patent validity and freedom of infringement was continued from time to time during the tooling period of these three machines.

In the course of its investigation, Singer in September 1953 came across the Vigorelli multicam zigzag sewing machine (Model-Zigzag 'A') and sought from its experts an analysis of the machine and advice on the claims it encompassed and employed. Its patent counsel advised Singer that, although it felt as a case of "last resort", it could "cast doubt" on the validity of any claims Vigorelli might obtain, it could not say with certainty that it could overcome [fol. 6782] them. These claims, as we have seen, encompassed a "rotary pattern cam mechanism" with a removable nest of cams out of which a single cam could be selected and manually controlled, which was basically a modified form of the mechanism employed by Singer in its "306" machine disclosed in Singer's expired United States Tiesler Patent (ideas also incorporated in Singer's "319" and "401"). Vigorelli had not obtained a patent in the United States for its machine. Although Singer felt that the manually controllable means infringed two Singer-owned foreign

patents, it was quite sure that the rotary pattern mechanism of Singer's "306" infringed that of the Vigorelli Zigzag A. That mechanism had been completely disclosed in an instruction book put out by Vigorelli as early as August 1953; although Singer had found no Vigorelli patents claiming the rotary cam mechanism, it had little doubt that Vigorelli had applied for such a patent in Italy and possibly in the United States. While this possibility was considered by Singer as "the usual business risk", Singer was far from certain that it could overcome Vigorelli's claim but thought that it might be in a position to properly question its validity and, if required, to obtain a reasonable agreement. Singer had spent considerable time and money on its machines; the "306" and the "401" were in the process of being developed; nothing could be definitely determined regarding the Vigorelli machine while the patent applications, if any, were not open to inspection. Singer decided to take the risk of marketing its "306" machine while continuing its search for information as to the Vigorelli machine.

In 1954, the first Japanese-made multicam machine was introduced by Brother International Corp. It incorporated the mechanism of the Vigorelli Zigzag A and the "401" machines.

[fol. 6783] In April 1955, Singer first learned that Vigorelli had introduced a modified form machine which differed from the earlier Zigzag A in that the rotary cam mechanism through a cam follower could now select a pair of cams instead of just one. Singer also learned that the claims of both the Vigorelli Zigzag A and the modified form machines had been revealed in two unexpired Vigorelli Italian-issued patents, No. 497,557 (filed January 28, 1953) covering the first multi cam machine and No. 507,862 (filed September 29, 1953) covering the modified multi-cam machine. However, the modified machine still retained the manually controllable means which infringed Singer's foreign patents.

More important, however, was the fact that Singer was of the opinion that the Vigorelli modified machine also infringed the Singer "401" machine covered by the Singer owned Johnson patent which had been filed on November 29, 1954. Although this filing date was after the filing of

the Vigorelli Italian patents, the Singer "401" machine had been developed prior to the filing date of the second Vigorelli Italian patent. It was on this basis that Singer felt its patent application was dominant to that of Vigorelli's. This confidence on Singer's part was not to last long, however, for further examination of the earlier Vigorelli Italian patent led Singer to conclude that, if Vigorelli succeeded in obtaining a patent on the stack of cams with a single follower, it could dominate the basic idea of both the Singer "319" and "401" in foreign countries, and that it was more than likely that someone other than Vigorelli might dominate in the United States. In order to secure as much protection as possible, Singer then purchased the Harris patent No. 2,693,778 filed in the United States on June 9, 1952 and issued to Carl Harris November 9, 1954. Although this did not claim a multicam mechanism and therefore did not dominate any of the Singer zigzag machines, it did disclose, prior to any known use or known [fol. 6784] patent priority date, a plurality of rotary cams and a single cam follower, for selecting and relating the needle to a particular cam.

Having acquired the Harris patent, Singer could endeavor to secure a claim broad enough to protect its "319" and "401" machines by obtaining a reissue of the Harris patent which would combine the Harris claim (which was disclosed but not claimed in the patent as issued) with those incorporated in the "401", "319", and the Vigorelli and Brother machines; by filing for a reissue, it could precipitate a patent interference proceeding between a Harris reissue application and any other pending application. A possible result of this course might be that the claims involved in the interference would be awarded to the Harris patent by reason of its prior filing date. Another possible result might be that the Patent Office would reject the claims as too broad. It was the view of Singer that such a rejection would serve as a good indication that no one else could be awarded the claims.

It was with this purpose in mind and to protect its "319" and "401" machines that Singer acquired the Harris patent. However, Singer was confronted with still another problem: whether Singer's broadened claims, if allowed on a reissue application of the original Harris patent, would

relate back to the early filing date of June 9, 1952 which would give Singer six months priority over Vigorelli's Italian patent, on the multicam and selector means, the particular mechanism common to the Singer "319" and "401" machines; and whether, in the happening of such event, this earlier priority date would be given under the law of Italy to the Italian Harris patent which had been filed six months after the Vigorelli Italian patent. If the earlier date of June 9, 1952 were accepted in Italy it would give Singer priority in Italy as well as in the United States. [fol. 6785] On the other hand it was entirely possible that neither eventuality would occur, and that Singer would not have priority anywhere.

But, whatever the result might be, Singer felt that with the Harris patent, it was in a better position to bargain; and even though, Singer was anxious to adjust the matter by agreement with Vigorelli, Singer proceeded with great caution. Singer did not think it wise to reveal to Vigorelli at that time what its purpose or views were.

Litigation developed as anticipated but from an unexpected quarter—Brazil. Here, Vigorelli had filed a patent application, which under Brazilian law Singer felt compelled to oppose lest Vigorelli achieve what might eventuate into a dominant position. Accordingly, Singer filed opposition to the Vigorelli application in Brazil. Such a step, it knew, would be only the beginning for it foresaw, and rightly so, that to stop Vigorelli from obtaining dominant patent rights it would have to oppose in each country in which Vigorelli might choose to file. Right on the heels of the Vigorelli-Brazil opposition, Singer found itself faced with another application in Brazil by Brutsch & Co. on a multicam arrangement. Singer also felt compelled to oppose this Brutsch application; and also a further application by Vigorelli filed in Great Britain.

It was soon quite obvious that the race for a patent on the multicam mechanism promised to become bitterly contested—indeed, a desperate one with the victor unknown. And yet, in spite of the urgency of the situation, Singer adopted a strategy to have its planned encounter with Vigorelli appear "fortuitous" and to proceed with the "greatest caution" in making the first move, especially since it felt that Vigorelli—as a competitor—might not feel

either too sure or too confident of its position. Singer decided to test and explore Vigorelli's reaction to some agreement and, if it was friendly, to hold a further meet- [fol. 6786] ing. Although it was planned by Singer that its New York patent counsel Stanford would go to Italy expressly for any arrangement that might be worked out, Singer went to great pains not to give the impression that anybody from its organization would make a special trip, preferring to have it appear that someone from Singer, while in Europe on other business, could handle the arrangements with Vigorelli. Stanford was to tell Vigorelli that Singer knew that at least two other companies were planning to acquire patents which might adversely affect it and Vigorelli and that standing together both could more effectively dissipate the effectiveness of such an acquisition. He was to convey the thought that Singer could assist Vigorelli. There followed a discussion between Vigorelli and Singer's Italian representative, Lando, from which it was clear that Vigorelli had a "shrewd idea" of Singer's plan and was "purposely or otherwise" vague about the Brazilian patent—and pretended ignorance of Singer's opposition there.

During the negotiations, Singer for the first time heard from Vigorelli of a Gegauf patent covering a multicam mechanism which, according to Vigorelli, had been deposited by Gegauf in a small number of countries and that Vigorelli was negotiating with respect to it. Singer's endless quest for patents on the multicam mechanism had failed to uncover any such patent but Singer was careful to hide this fact from Vigorelli. Singer proceeded then to attempt to learn from Vigorelli "unobtrusively and without any degree of emphasis" the basis of the discussions between Gegauf and Vigorelli. The fears aroused in Singer for the future of its "401" and "319" machines by the discovery of the earlier Vigorelli patent were now further sharpened by the discovery of the even earlier patent, which, according to Vigorelli, had also been deposited in the United States. It was imperative that Singer come to some immediate [fol. 6787] agreement with Vigorelli, for the alternative of pressing the Harris reissue in an attempt to frighten off Vigorelli and others had lost its value, since Singer feared that, if it did push this application, it would be revealing to

Vigorelli and Gegauf the weakness of its position. To make matters worse, it was informed by its British patent counsel that its opposition to the British Vigorelli application would have failed. At this point, Vigorelli had also filed a United States application corresponding to its two earlier Italian patents.

Thus concludes the background against which the license agreement was entered into by Singer with Vigorelli on November 17, 1955. It can hardly be seriously contended that the agreement was a preliminary step to effectuate a conspiratorial plan or an attempt to monopolize. In truth, Singer's back was against the wall in this matter and it was only thru swift and clever tactics that it was able to wrest some sort of victory out of what promised to be total defeat or at best a Pyrrhic victory.

It is most significant that throughout its negotiations with Vigorelli and right through the execution of the license agreement, Singer had no independent knowledge or information with respect to the Gegauf I patent. Singer had absolutely no contacts or dealings with Gegauf, whom it did not even know. Had it not been for Vigorelli's volunteering the very scanty information on the Gegauf I patent, Singer would have remained in total ignorance of it for prior to and even after learning of it, Singer had been unable to discover any trace of such a patent even though its search had been continuous and thorough. As late as November 14, 1955, Singer's German patent counsel was still searching for German and Italian applications with no success; it was not until January 1956, after its license with Vigorelli had been finally executed, that it discovered [fol. 6788] Gegauf's United States application. It was much later that Singer met Gegauf.

The fact that Singer knew that Vigorelli was negotiating with Gegauf about the patent did not charge Singer with knowledge of any possible wrongful purpose of these negotiations, or with the parties' intent (be it good or bad), nor did it impose on Singer a duty to make further inquiry. There is no evidence to support an inference that Gegauf knew of the negotiations between Singer and Vigorelli. At no time during the negotiations with Vigorelli was any mention made of excluding Japanese competition. There is no evidence that Singer was then contemplating, or that

it had mentioned, that it planned to purchase any patent from Vigorelli, Gegauf or Messerschmitt.

The license agreement of November 17, 1955, which Singer made with Vigorelli provided (1) that Singer would not bring any infringement action against Vigorelli under the patents issued or about to be issued in any country with respect to the subject matter disclosed in Vigorelli's Italian patents 497,557 and 507,862—when embodied in sewing machines manufactured and sold by Vigorelli; and (2) that Vigorelli would not bring any infringement action against Singer under patents issued or about to be issued in any country with respect to the subject matter disclosed in United States patents No. 2,693,778 and in United States applications by Johnson No. 471,766 and by Perla No. 386,684 when embodied in sewing machines manufactured and sold by Singer; and (3) that neither would institute any opposition, nullity or invalidation against or otherwise attack any of the above noted patents or applications and would withdraw any such proceeding if already instituted; but that in the event the parties did become involved in any office priority proceedings such as a "United States interference" or a "Canadian conflict proceeding", both would [fol. 6789] work to settle such proceedings in accordance with the laws and regulations of the patent office concerned.

The agreement was limited expressly to the patents which threatened to involve the parties in litigation over priority—the two Vigorelli Italian patents Nos. 497,577 and 507,862 and only "when embodied in sewing machines manufactured and sold by Vigorelli"; and the United States Singer patent No. 2,693,778, Johnson No. 471,766 and Perla No. 386,684, and again only when "embodied in sewing machines manufactured and sold by Singer".

The proviso not to sue each other for infringement and not to oppose each other's claims on these patents was perfectly consistent, proper and lawful with the exchange of licenses under their respective patents and, if the lack of opposition did result in permitting the issuance of broad claims to each one under his patents—it was not unlawful for it was being done for a lawful purpose. There is no duty, for public benefit or otherwise placed on a patentee or licensee to oppose the claims of another in order to narrow or invalidate the scope of patent which might issue

to the other. The provision to withdraw any interference proceedings which might have been instituted prior to the agreement and to settle interferences in accordance with the laws and regulations of the patent office involved "and in the spirit of the agreement" were steps—and lawful ones—necessary to effectuate the mutual promises and to carry out the obligation not to become involved in litigation with each other.

Neither licensee was nor could be sure enough of his ground to risk patent litigation. Each party in licensing the other, surrendered a valuable property right in exchange for permission to use the other's property.

[fol. 6790] We find that there was no agreement to use the legitimate means of a license to stifle competition by helping each other acquire broad patent claims and by agreeing to assert the patents only against certain competitors. We find that there was no agreement or understanding between Singer and Vigorelli that was not there expressly stated. There was no promise or commitment made by either of the parties with respect to licensing or not licensing, enforcing or not enforcing, by infringement action or otherwise, of any patent, then owned or subsequently to be acquired, or with respect to the use in any way of any such patent, alone or in conjunction with any other patent; and no agreement that either would restrict in any way its ownership of any patent.

We find that in approaching and in bargaining with Vigorelli, Singer was at all times dealing at arm's length, solely in its own interest for the purpose and with the intent of reaching a cross-licensing agreement. Singer's purpose in entering into the cross-licensing agreement with Vigorelli was to secure to Singer the ability to sell its "401" and "319" machines in the various foreign countries where sale might otherwise have been foreclosed by enforcement of the Vigorelli patents, or at least to be free from the threat of litigation with respect to these patents.

b. Singer Gegauf license agreement.

We have seen that during its negotiations with Vigorelli, Singer for the first time learned about the Gegauf patent and Vigorelli's negotiations with Gegauf. On October 20, 1955, Singer discovered that the Gegauf patent had been

deposited in Switzerland on May 31, 1952, and at the same time obtained a copy of its corresponding Italian patent which enjoyed the same date. This patent disclosed (1) an embodiment of a zigzag stitch machine, having a stack of [fol. 6791] cams and a single cam follower, which by sliding lengthwise of the axis of the cams could engage any one of such cams, and (2) an embodiment of a zigzag stitch machine having a stack of cams with each cam having its own individual follower. In January 1956, in its continued and extended search, Singer learned that on May 20, 1953, Gegauf had filed a United States application corresponding to the Swiss application and bearing the date May 31, 1952. This was nine days earlier than the priority date of Singer's United States Harris patent No. 2,693,778 which had been filed on June 9, 1952.

At this time Singer also learned that Vigorelli had entered into a license agreement with Gegauf similar to that which it had with Singer.

In January 1956, Singer was advised that its Harris reissue patent was about to issue. Singer feared that an interference might be declared between this patent and the United States application of Gegauf. Singer was therefore most anxious to negotiate an agreement with Gegauf similar to the one it had with Vigorelli. Armed with the knowledge that the Gegauf patent had priority of nine days (which it assumed Gegauf did not know), Singer felt that it was in a better bargaining position and thus Singer was anxious to conclude an agreement before the interference disclosed to Gegauf its superior position.

Singer did not inform Vigorelli of its plan however but did suggest to its Italian representative that, without arousing Vigorelli's curiosity, he find out the details of the Vigorelli-Gegauf agreement and the names of the Gegauf officials with whom Vigorelli negotiated or their patent attorneys as well as the location of their offices. Singer was particularly anxious to know what Vigorelli had found out with respect to Gegauf's patents which had inducted [fol. 6792] Gegauf to drop its original demand of $160,000 and grant Vigorelli a license for nothing.

It is clear that Singer intended to negotiate with Gegauf separately and as secretly as possible. Although it made use of Vigorelli, it did so as a matter of necessity and solely

to gain bargaining information. Vigorelli, on its part, apparently was just as secretive about its affairs.

Singer's representative, Dr. Lando, met with Vigorelli on February 29, 1956. As a result of this meeting, Lando was able to report that Vigorelli had stated that it had obtained a free license from Gegauf because of the comparative weakness of Gegauf's Italian patent, and because of the fact that Gegauf had deposited its patent in only four countries as opposed to filings in seventeen countries by Vigorelli, and because of Vigorelli's awareness of certain patents which Gegauf considered dangerous to its patent. Lando also reported that Vigorelli's curiosity as to Singer's motive had been aroused, but he added that Vigorelli thought Singer was collecting information to oppose the Gegauf patent in the United States in order to prevent the sale of its machine there. Lando further reported that his (Lando's) expression of doubt as to this disapointed Vigorelli since Vigorelli was apparently hoping that Singer was about to get active against Gegauf in patent contests in the United States, all to its (Vigorelli's) benefit.

Gegauf and Vigorelli were not exchanging confidences nor were they seeking to promote each other's interests. The treatment accorded Gegauf by Singer was to be no more candid—Singer's objective being to keep Gegauf in the dark as long as possible and to disclose only what was absolutely necessary to the effectuation of Singer's plans. Singer had decided to approach Gegauf in substantially the same manner it had approached Vigorelli, that is, with intimations of litigation.

[fol. 6793] The Singer Swiss Manager informed Gegauf that Singer was desirous of discussing "patent questions". On April 13, 1956, a momentous meeting was held at the Gegauf factory in Steckborn, Switzerland. When entering negotiations at this conference, Singer knew that Gegauf had a patent issued in Switzerland with a priority date nine days before that of the Harris patent and that the principal claim of this patent read directly on the Singer "401" machine. Singer also knew that Gegauf had filed a United States application, claims of which Singer presumed would read on the "319" and "401" machines. Singer was also advised of the fact that Gegauf had an application pending in Germany, which might mature into a patent which would

read upon the "319" and "401" machines, and that Gegauf also had an Italian patent the validity of which might be put in question due to the manner in which it was written. Singer also had information that Gegauf was reported to have serious worries as to whether certain prior patents, if called to the attention of Patent Offices, would limit or invalidate its claim. Singer realized too that the Harris reissue application in the United States read on the Gegauf machine and that the various Harris patent applications on file in foreign countries, had claims which if they could be properly amended would read on the Gegauf machine.

Waterman of the Singer United States office reported on this 7½ hour meeting to New York as one which was not as straightforward as that with Vigorelli, due to a feeling on the part of Gegauf that its situation was superior and that it was "suspicious of our intentions"; that Singer did nothing to dispel Gegauf's fear that it was going to be hurt in the United States by the lower priced Japanese machines, because "one of the strong points" which was to be used in favor of the agreement was protection against the Japanese. Waterman also reported that Gegauf had thrown out a lot of topics having [fol. 6794] nothing to do with patents, among them a suggestion that there be a division of territories between Gegauf and Singer which "was brushed aside pronto in short order". Waterman also felt that Gegauf was very much afraid that Singer wanted to copy its machine and wanted a promise to the effect that it would not do so; and he left Gegauf with no doubt that Singer was going to oppose the issuance of its patent—in all four countries and that it could knock out its claim but that both could be hurt. So suspicious was Gegauf of Singer's motives that it drew a draft agreement consisting principally of promises by Singer not to copy its (Gegauf's) machine; it appears that the Gegaufs took a personal pride in it and attached a special value to it.

A license agreement between the parties was finally entered into on April 14, 1956. At that time Gegauf informed Singer that it had called Vigorelli and told him of the agreement. Reporting on the meeting at which the license agreement was signed, Waterman related that Mr. Gegauf said that he had called Vigorelli to inform him of the agreement he was about to sign with Singer.

The first part of this Singer agreement with Gegauf listed the Singer owned Harris Patent No. 2,693,778 and reissue Patent Application No. 516,059 and nine specified corresponding foreign patents and applications (British, Belgian, Canadian, French and Italian and four patent applications: Canadian, German, Japanese and Swedish). It also listed the Gegauf Swiss Patent No. 310,788, and the Gegauf Italian and German patents Nos. 501,172 and 1,707,338 respectively; and the United States and German applications Nos. 358,377 and 11,654 respectively. A preamble recited that the parties acted in realization of the fact that interference proceedings were about to be opened in the United States between the Singer owned Harris re- [fol. 6795] issue application and one or more Gegauf patent applications corresponding to its listed patents and patent applications. The parties agreed not to do anything to restrict the scope of the claims of the other in any country relating to the subject matter of the listed patents and patent applications. Although the language is quite broad, this provision was interpreted and intended by Singer and Gegauf to mean that neither would file opposition, i.e., nullity and invalidation proceedings against the other's applications in foreign countries where such special proceedings were known. It was also agreed that each would, in accordance with laws of the particular Patent Office, facilitate the allowance to the other in any country of claims "as broad as possible" relating to the subject matter of the enumerated patents and applications. Here again, although the parties speak of "any country" the only place where such a provision was significant (at least as far as Singer was concerned) was in the United States where Singer knew Gegauf's application preceded Singer's Harris patent and reissue patent and where it felt sure Gegauf would be awarded the claim as filed. In effect, all that Singer agreed to do was not to attempt to obstruct what it had no power to prevent and what in fact it knew Gegauf would eventually be awarded under the United States laws on the ground of priority. There was nothing illegal in this. We know of no rule of law which would make such abstention under the circumstances here illegal; and this is so even if Singer could have blocked the issuance of the United States patent to Gegauf. We have found no decided

case (and none has been cited) which holds that one must contest with a competitor for priority in the Patent Office every time a claim is filed which affects his own patent.

In the agreement in paragraph 2, Singer also agreed not to attack Gegauf under any of its enumerated patents and not to challenge the construction of its "Bernina" sew-[fol. 6796] ing machine. As far as the United States was concerned, immunity to Gegauf would follow from the awarding of the United States patent to Gegauf. It was reported by Singer that it felt it was giving up something of value in Canada where Singer had an application pending filed June 22, 1955 which it hoped might issue on a broad claim, and in France where Singer had obtained a patent on a broad claim on June 5, 1953. Why it should feel so is not clear in view of the fact that these applications were filed after the Bernina, but that question need not detain us since it is Singer's intent and motive with which we are concerned, and not the soundness of its reasons.

And in the following paragraph 3, Gegauf agreed not to attack Singer directly or indirectly in any country on the basis of its enumerated patents. This simply meant that Gegauf would not take steps to prevent Singer from manufacturing and selling the "319" and "401" in any country where he had filed patent applications by charges of alleged infringement.

These paragraphs 2 and 3 were the essence of the agreement and were considered so by the parties.

By paragraph 4, Singer agreed not to construct a slavish copy of the "Bernina" machine, as a whole or of the mechanism it included. The significance of this was in the fact that Singer had not yet put its machine on the market and that it made this promise to allay the fears of Gegauf of piracy of its design.

By paragraph 5, Singer undertook, on request of Gegauf, to give to Gegauf "the amical assistance of its patent attorneys for the defense of any of the above mentioned Gegauf patents or patent applications against *an action in cancellation.*" Singer was reluctant to enter into this undertaking because it feared that it might appear that [fol. 6797] the parties were acting in collusion. However, at Gegauf's insistence, the clause was included; but all that

Singer felt obligated to do under this paragraph was give Gegauf "an opinion" as to the merits of a challenge in the event its patents in a foreign Patent Office were attacked as invalid. Under no circumstances was Singer prepared to, and the agreement did not obligate it to legally assist Gegauf in a suit to assert its patents. It was Singer's position that if he wished to sue someone "that was entirely up to Mr. Gegauf."

As we have noted, this agreement was limited to the Harris patent; no mention was made of Singer's Perla or Johnson patents because Singer was not anxious to have Gegauf know of its "319" machine.

And, finally in paragraph 6 of the agreement, it was agreed that each would tell the other prior to the execution of the instant agreement of any other agreements concerning the enumerated patents and patent aplications. In compliance with this provision, the parties exchanged the information which was already known to them both: that each had an agreement with Vigorelli; and that Singer had agreed not to sue Vigorelli on any claim that it might obtain on the Harris application.

We find that the agreement constituted the entire understanding of the parties; that there was no agreement or understanding about how each would prosecute, license or otherwise restrict its ownership of any patents it might obtain—or that eventually Singer would purchase the Gegauf patent. Although Singer had the idea very much in mind, it did not think it advisable to mention it to Gegauf at that time. Although Vigorelli knew that Singer and Gegauf had entered into an agreement, there is absolutely no evidence that Vigorelli was in any way instrumental in bringing the parties to agreement. In truth, it was [fol. 6798] Gegauf who told Vigorelli that it was negotiating an agreement with Singer; Singer did not mention the matter to Vigorelli nor did Singer ever express its hope of acquiring the Gegauf patent.

The undisputed facts support no conclusion other than that the underlying, dominant and sole purpose of the license agreement was to settle the conflict in priority between the Gegauf and Harris patents and to secure for Singer a license right under the earlier patent in order to free the marketing of its "401" and "319" machines in

various countries, particularly in the United States where enforcement of the Gegauf patent might very easily have foreclosed the market to Singer. As to this Singer had much to lose for Singer had spent considerable money developing these machines.

And, we find that Singer had a secondary purpose; it was the only one disclosed to Gegauf, and in fact the very one used to convince Gegauf of the advisability of entering into an agreement. It was Singer's desire to obtain protection against the Japanese machines which might be made under the Gegauf patent; this sprang from a fear which Singer had good reason to believe to be well founded.

c. Singer-Gegauf assignment

Following the Singer-Gegauf negotiations and on April 20, 1956, Waterman went to Italy and there met with Vigorelli. He wrote that "what Vigorelli had on his mind was that now that Singer, Gegauf and Vigorelli had arrived at certain agreements, they should thereafter act in concert against others"; that such a suggestion Singer "very promptly said was out of the question", and that the best thing was "for each one to prosecute his own patents and take care of any cases of infringement that might appear"; that that "certainly would be Singer's attitude with respect [fol. 6799] to the patents that it owned"; and that upon learning that there "could be no joint action" the subject was dropped.

Vigorelli was told by Waterman "in very general terms" of the agreement with Gegauf but not of the special provisions forbidding Singer from duplicating Gegauf's machine. The result of the conversation and the meeting was that Vigorelli understood that it was Singer's position that each must prosecute his own patents and that Singer could not help Vigorelli in that respect. It was at this meeting that Singer began to lay the foundation for an approach to Gegauf by Vigorelli relative to the acquisition of its patent. It was Singer's opinion that "pressure in the right direction" was what would bear fruit. It was also at this time that Singer discovered an earlier Belgian patent owned by Messerschmitt embodying the mechanism of its 319; and as Stanford expressed it Singer had been "topped again".

Stanford and Vigorelli's patent attorney Majnoni had a friendly discussion during which Stanford expressed concern over the success of its Harris-Gegauf interference and over the position of Gegauf and its ability to successfully assert its patent in the United States. Stanford stated that Singer had not approached Gegauf on the matter of acquiring the application because Singer thought the price would go skyhigh. The conclusion of the talk was that Majnoni, who was friendly with Gegauf's patent attorneys, was to mention to them that Singer, if it had the Gegauf patent, could "best handle the patent situation." The services of Vigorelli were used by Singer, because Singer knew that Vigorelli was better acquanited with Gegauf's people, and that Gegauf was somewhat mistrustful of Singer's motives and might react more favorably if the suggestion came from a source other than Singer.

[fol. 6800] On June 19, 1956, Singer's Italian representative reported to Waterman that he had received a letter from Majnoni in which the latter said that he had spoken to Gegauf's attorneys about the advantage of having the Gegauf application assigned to Singer in such a way as to "prompt an initiative to this end by Gegauf". He added that he had left the matter up to Gegauf, but assured Singer's attorneys that the matter was discussed "without in any way letting it be known that your (Singer's) firm was aware of the advances which would be made". In these negotiations and to this limited extent Vigorelli's patent attorney was acting as Singer's agent. There is no evidence, however, that his authority extended to anything more than to effect a rapprochment between Singer and Gegauf.

Subsequently, and in September 1956, Singer was advised by its Dr. Lando that, according to Majnoni, Gegauf's "mind has been directed" to the convenience of transferring its United States application to Singer by the fear that there was a United States patent which might anticipate and invalidate Gegauf's German patent and that such patent might have been disclosed by Vigorelli's United States application; that Vigorelli might agree to withdraw its United States application on condition that the Gegauf application be placed at Singer's disposal for broader protection in the United States by Singer's invoking the Harris

and Gegauf patents. Dr. Lando also advised Singer that Gegauf was still suspicious of Singer's motives regarding its patent and needed reassurance.

Early in August 1956 the matter of Singer's purchasing the Gegauf United States application had been directly broached to Gegauf by Waterman and Stanford on the occasion of a visit by Gegauf, Jr. to the New York Singer offices. At this meeting, Singer emphasized the legal and practical difficulties of enforcing a United States patent [fol. 6801] against the large number of infringing imports which were coming into the United States.

In September Gegauf wrote Singer favoring the idea of doing something "against Japanese competition" in the United States. Singer replied that an arrangement could be reached "equally advantageous to both", and that it would be helpful if Singer were to be informed of the status of the Gegauf United States application. Singer gave assurance to Gegauf that this disclosure was for the sole purpose of reaching an agreement.

A conference was held in Landau, Germany, on September 23, 1956 attended by Gegauf, Sr., Gegauf, Jr., other directors of the Gegauf Company and Waterman and Stanford. Gegauf, who placed great importance on its United States claims, wanted $1,000,000 for its application but would consider $250,000. As this sum was more than Singer was willing to pay, Stanford ended the negotiations "on a friendly basis."

On August 22, 1956, the Patent Office had declared an interference between the Harris reissue and Gegauf applications. Not having heard from Gegauf, Singer wrote in October 1956, suggesting that they settle the interference in accordance with the terms of their license agreement so that the prevailing party could secure a valid patent. Later and on March 15, 1957, Singer abandoned the interference set up between Singer's Harris claim and the Gegauf claim. On April 1, 1957, the Patent Office dissolved such interference.

During the interval, nothing further was done by Singer toward securing the Gegauf application; however, when Singer was notified in September 1957, that its Harris reissue application was about to issue as a patent, and presuming that Gegauf's patent would soon issue, Waterman

approached Gegauf. At this time, Waterman pointed out [fol. 6802] that since the patents were about to issue, their mutual interests required that something be done to protect themselves from the Japanese infringing machines. Waterman also, quite correctly, pointed out that, under their license agreement, neither was in a position alone effectively to protect its respective patent. Waterman suggested that although he had not planned to go to Switzerland, he would endeavor to meet with Gegauf. To this Gegauf replied that he would be happy to meet Singer to discuss "mutual enforcement" of its United States application and the Harris reissue against "infringing products of the foreign manufacturers."

Although the declared purpose of the meeting was enforcement of their patents, Waterman came to it with two agreements—one, providing for an outright sale of the Gegauf application in exchange for a single lump sum payment; and the other, providing for a sale in exchange for a license back and yearly payments. The first agreement gave Singer irrevocable title to the application and freed it from the necessity of "dealing any further with Gegauf in connection with this general subject." The second agreement would have had the advantage of enabling Singer at any time to terminate the agreement and revert back to the license only, with no need for further payments. Both of the proposed agreements related solely to the Gegauf United States application, which was also the subject of the license agreement.

On October 16, 1957, Waterman and his patent attorney met with the Gegauf people to discuss the assignment which would give Singer "complete ownership" of the patent and in return license Gegauf to build and sell machines. Singer endeavored to give the impression that the "subject was not overly important" to Singer. Waterman reported that the price agreed on for the outright purchase of the [fol. 6803] application was reached only after considerable discussion; it was $40,000. Singer expected that an agreement "if not already reached" would be finally settled shortly.

But, Gegauf was not so willing as Singer had assumed. Within the week Waterman was reporting to Stanford that the $40,000 had risen to $125,000 for a lump sum pay-

ment, or $25,000 per year, as long as Singer kept the patent, with a minimum duration of the agreement of 3 years. He also sent word that Gegauf insisted on the right to license three companies and did not wish the divisional claim assigned to Singer as it intended to license that to some interested European company. Gegauf had carved out of its original patent application a divisional application which was filed on December 2, 1957. Waterman instructed Kirker, Singer's Swiss patent attorney to pass the word to Gegauf's patent attorney "without making any comment on the first two conditions" that the refusal to assign the divisional claim would almost surely make the agreement impossible as "we all along were discussing application including divisions", that either standing alone was "weak". The Government makes much of this word, which on the telegram (Govt. Exh. 50) appeared as "leak", to support a finding that defendant was plugging up "leaks", in its patent wall. We think it more probably a spelling error, but either way find no significance in the word. Singer replied that the value of the Gegauf patent greatly decreased when other people were licensed, that it understood that Vigorelli was a necessary licensee, and that it favored the plan of $25,000 yearly and that the "divisional claim must be included."

The following day Kirker reported Gegauf's position to Stanford. Gegauf was insistent that the agreement must relate only to the basic application and that "the divisional application will not be included." Gegauf had the idea that European companies were highly interested in [fol. 6804] the divisional application and that it could sell this to them. Kirker also related to Stanford that Gegauf wished to be informed when Singer intended to sue a European company for infringement of the patent; that he pointed out that it would be better to set forth the condition in another form, viz. to include in the agreement the name of the companies which Gegauf had in mind, and to restrict said condition to such companies. Kirker also reported that the amount to be paid had been discussed: $125,000 for a single payment or $25,000 per year for a minimum of three years. Kirker had then expressed the opinion that the amount suggested was extremely high but that probably an agreement might be obtained on the

basis of half these sums; that the $40,000 mentioned by Singer was considered a minimum. He summed up Singer's position as being all or nothing at all: "No question of two separate agreements and two separate payments."

In the meantime, talks were suspended while Stanford and Singer's patent department obtained from Gegauf's patent attorney copies of the basic and divisional applications to study them to aid them in reaching a decision.

At this examination Singer discovered for the first time from Gegauf's United States patent attorney that there were three United States applications relating to zigzag mechanisms; the first was the basic application No. 358,377 (this was issued April 29, 1958 as Gegauf I—Patent No. 2,832,302), in which Singer was vitally interested; the second, it believed but was not sure, related to the idea of having "two zigzag mechanisms" for "shifting at the will of the operator from one mechanism to the other" (if this was the "divisional" application which Gegauf had in mind, Singer stated that it had no interest in it and did not require it to be included in the agreement); the third application, which was not filed, interested Singer because it [fol. 6805] disclosed and claimed vital and essential material taken from the application No. 358,377.

With respect to the desire of Gegauf to be consulted before Singer instituted infringement suit of Singer against European manufacturers, Singer stated that "if necessary", it would agree to permit Necchi and Pfaff in addition to Vigorelli (who was already licensed) to sell their machines in the United States without charge of infringement. Stanford authorized Kirker to go as high as $75,000 for the "outright sale" of the patent application although it felt it should pay only $62,500. Kirker then suggested to Stanford that he have an interview with Gegauf and his attorney.

This interview was held and revealed that the position of Gegauf had been considerably altered since Stanford's visit (a month before). Gegauf's position now was that while it had no objection "to making an agreement with Singer, in order to stop as far as possible Japanese competitors in the United States market", it was willing to do so only under certain conditions. First, that Singer would not manufacture under the Gegauf application. This con-

dition was the result of an objection made by Gegauf, Jr., that perhaps Singer was interested in acquiring the Gegauf application not to act against competitors but rather to be free of infringement claims by Gegauf. Second, Gegauf insisted that it retain the right to sub-license "one European company" out of a list of European companies. Finally, Gegauf stated that the $125,000 asked for the application and the divisional application was cheap and that it could not go lower since it could get more money if it licensed the invention. Kirker replied that there was no comparison since a sale to Singer was insurance against common competitors and that was why Singer was willing to pay. Gegauf asked Kirker to make a definite offer, to be rejected or accepted, closer to $125,000 than to the $40,000 proposed [fol. 6806] by Singer, declaring, however, it would not bargain. This came as a surprise. Singer had been led to believe that Gegauf would reduce his figure considerably. Kirker told Gegauf that he could go no further with the discussion because he was not authorized to do anything but offer $40,000 as a maximum. What was bothering Gegauf throughout was his fear that if Singer stopped the Japanese infringements in the United States with the Gegauf patent, they would go to Europe where Gegauf was not in as good a position to stop them because his application had been filed in but four countries and the divisional application had been filed nowhere in Europe.

Kirker was of the opinion that, due to Gegauf's attitude, Singer might have to go as high as $100,000 and that, although Singer might offer $75,000 and then $85,000, Gegauf would make no substantial concessions.

The policy of Singer was to obtain such control of the Gegauf application as would put it in a position to get the very best patents "to bar imports which would violate these patents", while the elimination or curtailment of European imports was "an important but secondary objective". Singer was, naturally, most reluctant to grant licenses to the Europeans and resolved that, if it had to pay Gegauf a higher price it would try to limit the number of licensees, aware that these licensees would lessen the value of the patent.

From the report of Stanford's meeting with Gegauf, it was apparent that, although Singer had been at great pains

to conceal its interest and need for the Gegauf application, Gegauf was not misled or in the dark and had no intention of finally closing with Singer at a cheap figure. In order to fortify his vantage position, Mr. Gegauf retreated to the surroundings of his own home on a pretext of illness, thus obliging Kirker and Stanford to follow him there for the interview instead of meeting them at the plant in [fol. 6807] Steckborn as had been previously arranged. That Singer was aware of the employment of this strategy is evident from Stanford's statement that they "privately doubted the illness" of Gegauf and that Gegauf looked "quite hale and hearty." Although Singer was most anxious to conclude the assignment, it decided to assume an offensive position rather than petition, and began the negotiations by questioning Gegauf on its patent protection in Europe. Singer also put these questions in an attempt to find out whether Gegauf knew of any other patents which might affect the Gegauf patents which Singer sought. In addition, Singer maintained that under the license agreement it had the right to manufacture under Gegauf's divisional application as well as under the original application. Gegauf's son argued that, since that agreement had been signed at a time when an interference was pending between the patent applications—the license ran only to the disputed claims and not to the patent application as a whole. He then advanced the argument that, if stopped by Singer in the United States, the Japanese manufacturers would run to Europe; to this Singer answered that a greater risk was run in Europe if Singer were not permitted to first stop infringements in the United States. Gegauf asked that there be a provision that Singer assist Gegauf in actions under his patents against his competitors in Europe. Singer, however, rejected this proposal. The matter of licensing was then taken up. Singer "avoided giving a license to a third party" under the patent it hoped to obtain, by agreeing not to attack the importation by Vigorelli and Pfaff without Gegauf's consent; and to Gegauf went the right to sell its Swiss-made machines in the United States.

After "considerable thought," Singer, at Gegauf's request, then made its offer of $75,000 in Swiss francs because they had a "larger sound". Gegauf countered with

$125,000 and Singer after considerable discussion brought him down to $100,000. Singer continued "to drive home [fol. 6808] the point" that Gegauf stood to benefit more by enforcement of the patents in the United States because the "Brother Pacesetter" machine, a big selling and patent infringing Japanese-made machine, was in direct competition with the Gegauf machine, for both machines were of the free arm type. This was not so with respect to Singer, for it made the flatbed type machine. The point apparently reached home, for Gegauf "suddenly" offered its application to Singer free of charge, if Singer would agree for the next five years to sell 10,000 of Gegauf's free arm machines in its shops. Stanford expresed doubt that Singer would be willing to do this unless it could get an exclusive distributorship. A response came with alacrity that, in fact, Gegauf was thinking of changing its agents in the United States. Stanford promised to discuss the proposal with Singer's executives and then quickly brought the conversation back to his principal objective—"patents and patent questions".

A price was finally agreed on at $90,000. Prior to parting, Stanford stated that Singer would not sell Gegauf's machine under the Bernina name in its shops and Gegauf informed Stanford that it could not give Singer an exclusive agency. The agreement assigning the patent application and the division, was drafted by the Singer people the next day and a check for $90,000 was drawn on a Swiss bank to the order of Gegauf.

Gegauf then on December 5, 1957 assigned to Singer its United States application No. 358,377 and all right in the inventions claimed therein and to all United States patents which might be granted thereunder.

The assignment did not recite the divisional application because its filing had been too recent. It was the intent of the parties, however, that the divisional application would also be assigned. The accompanying agreement executed the same day, after reciting the continued existence of the prior license agreement mutatis mutandis, and [fol. 6809] the assignment by Gegauf to Singer of United States patent Application No. 358,377, and to the divisional application carved out of this application which had been filed just prior to the agreement provided that in considera-

tion of the sale, Singer would pay Gegauf $90,000 and that Singer would grant Gegauf a non-exclusive royalty free license to sell in the United States sewing machines made in Gegauf's own factory in Switzerland which were of the type disclosed in the assigned patent applications. Singer also agreed not to institute, without the consent of Gegauf, legal proceedings asserting the patents when issued against Pfaff in Germay or Vigorelli in Italy, with respect to sewing machines manufactured in their respective German and Italian factories. Singer further agreed not to make a slavish copy of the Bernina machine as a whole or of its mechanism. Gegauf undertook to assist Singer, at Singer's expense, in procuring a valid patent based on the applications.

With the exception of these specific limitations on Singer's right to assert the Gegauf patent when issued, no agreement was made or understanding reached by the parties with respect to the licensing, enforcing or use of their patents. These writings were the entire agreement of the parties.

If one were to describe the attitude of these alleged "conspirators" throughout, it would have to be in terms of suspicion, wariness and self-preservation. It is most striking that, throughout, their dealings were characterized by an absence of unity or identity of any common purpose or motive. Singer's sole interest was to protect its "401" machine against all infringing machines. *Poller* v. *Columbia Broadcasting*, 368 U. S. 476. This extended not only to machines originating in Japan but everywhere, including Europe. Singer was not concerned with the effect upon Gegauf in Europe as long as it did not affect Singer [fol. 6810] products in the United States. Gegauf's prime interest was the protection of its machine in Europe from Japanese infringements—a danger which it was far from risking for the sake of dealing as it did with Singer. Gegauf gave but little weight to what might happen to Singer in the United States so long as Singer's danger did not affect Gegauf in Europe.

By far the largest number of infringers of the Gegauf patent and invention were the Japanese. Gegauf was conscious, as were all in the sewing machine business, of the growing inroads of Japanese machines in the markets all

over. Gegauf knew too that a number of these machines would violate the patent that would issue on its application.

Singer had told Gegauf, with complete frankness, that the reason Singer wanted the Gegauf patent was that Singer could enforce it better than Gegauf could. Gegauf well knew when it negotiated with Singer concerning the transfer of the patent that Singer expected upon acquisition to enforce the patent and that enforcement would most certainly include Japanese manufacturers who were the principal infringers. Singer stated that it was willing to pay a substantial sum for the patent so that it might enforce it.

The fact, however, that Singer had this unconcealed purpose and intent and that Gegauf knew or was advised of it does not spell out or sustain an inference that there was an unlawful conspiracy or agreement to exclude or not license one particular competitor; nor does the fact that Gegauf shared with Singer a common concern over Japanese competition. The fact that there may exist a motive for a conspiracy does not establish its existence; inferences of this nature may not be supported on a foundation built alone on the sands of suspicion.

Nor does the fact that the Gegauf patents in the hands of Singer incidentally would inure to the benefit of Gegauf and Vigorelli make their acquisition an unlawful patent [fol. 6811] pool. Singer acquired the patents only after extended bargaining, and on the best lawful terms it could obtain from Gegauf. While it is true that the use of the Gegauf patents in conjunction with its own patents gave Singer more power over infringements than it would have had with its patents alone, this is so with most patent acquisitions and it is a lawful power which comes to an independent patent owner.

Neither party was eager for the agreement finally made. It resulted from a fixed determination on each one's part to give and pay for nothing more than was absolutely necessary to secure its respective end and to carry on the protracted negotiations as distantly as possible.

A like observation may be made with respect to Vigorelli. Singer made use of Vigorelli's knowledge and experience in dealing with Gegauf in its preliminary negotiations con-

cerning the acquisition of the Gegauf patent. There is no evidence that Vigorelli played any further part in realizing Singer's purpose or that it was even kept informed of the progress of the negotiations.

No agreement or understanding was reached by Singer and Vigorelli at any time that Singer would acquire any patent or that Singer would license, enforce or restrict in any way its ownership of any patent owned or which it might acquire.

As a nonexclusive licensee of a United States patent owned by a foreign manufacturer who had neither committed himself nor authorized Singer to protect the patent from infringement and whose principal interest lay in Europe, Singer in the United States felt at the mercy of infringers. Singer thus realized the need for independent ownership of the patent.

Singer admits that a copy of its "401" machine could be excluded under the Johnson patent, which patent was a result of its own research. However, it felt that a copy of [fol. 6812] the "401" machine modified only to the extent of removing or immobilizing one of its two followers would not infringe the Johnson patent and that, therefore, the acquisition of Gegauf No. I which covered the idea of a single cam follower which might be engaged with any one of the cams, was necessary to exclude such a modified copy of the "401" machine. Whether in fact it did need the patent to protect its machine, is unnecessary to determine for we find that this was the motive behind the acquisition.

The purpose behind Singer's insistence in acquiring the Gegauf divisional application which issued as Gegauf II was the need to protect a cross-license agreement it had entered into on April 16, 1957 with Messerschmitt giving the latter the right to sell Singer's "319" multiple cam machine covered by Singer's Perla application. The Gegauf divisional application, which had priority over Perla, disclosed and claimed the same type of mechanism as that embodied in Messerschmitt's machine and Singer's "319," with the difference that the Gegauf II mechanism was incapable of combining intelligence from two cams simultaneously to produce a zigzag stitch. Singer felt that unless it acquired this application, Gegauf would obtain a patent based on this application by the use of which it

could block Messerchmitt's sales of its multiple cam machine in the United States, and subject Singer to a suit for breach of contract by Messerchmitt. However, since Singer was dealing unilaterally with each company, Gegauf did not know this. Singer refrained from telling Gegauf why it needed the divisional application, fearing that the price, already high, would be that much higher if Gegauf were informed.

We find that Singer's motive in acquiring the divisional application was not only perfectly consonant with good business practices, but was entirely lawful. This brings us to the Messerschmitt agreement.

[fol. 6813] d. Singer-Messerschmitt license agreement and subsequent assignment

Although Messerschmitt is not named a co-conspirator, the dealings Singer had with it are claimed by the Government to further evidence Singer's intent and reflect its state of mind to acquire broad patent protection in order (1) to further the common design of the three conspirators to unlawfully exclude Japanese imports; and (2) to help Singer achieve a monopoly and unlawfully exclude all competition.

The events leading up to the Messerschmitt license were as follows. While Singer at the end of 1956 was in the midst of tooling and preparing the manufacture of its "319" machine in the United States and Scotland for worldwide distribution under its Perla patent application, it discovered the Messerschmitt multicam machine. This machine contained, as did the "319", a plurality of cams, each with its own follower—the basic feature of such multiple cam mechanism. We have already noted that Messerschmitt was a German corporation engaged in the manufacture and sale of sewing machines including zigzag sewing machines. Singer had filed its United States Perla application covering the "319" on December 8, 1954, but Singer believed, and with good reason, that Messerschmitt had filed its patent application in Germany prior to that date. Singer entertained this belief even though up to March 15, 1956 it had been unable to locate the Messerschmitt patent or patent application. In the meantime, Singer was filing corresponding Perla applications in

twenty foreign countries. The situation became really acute when in 1956 Singer was advised by the German Patent Examiner that he was holding its Perla German application in abeyance because of a prior filed German application, which Singer suspected was one filed by Messerschmitt. Because of its inability to obtain any information on its own, Singer was forced to seek a conference [fol. 6814] with Messerschmitt. Just before the conference in April 1956, Singer discovered a Messerschmitt Belgian patent with a priority date fourteen days earlier than the Perla United States application, but subsequent to the Perla invention. Thus, while Singer might obtain a patent in the United States which would dominate the "319" machine, Messerschmitt might obtain a patent in many of the foreign countries based on an earlier priority date, thereby exposing Singer to probable infringement liability to Messerschmitt in many countries where it planned to manufacture or sell its "319" machine.

At this time, Singer was tooling and otherwise preparing to manufacture the "319" machine in Italy. Italian patent counsel advised Singer that the "319" machine infringed the Messerschmitt Italian patent as issued. The infringement, Italian counsel advised, lay in the fact that the Messerschmitt patent disclosed the idea of a plurality of cams, each with its own follower, and that under Italian law such disclosure established the scope of the patent. Counsel further advised Singer that while there was a good chance that the Italian courts would hold that the Messerschmitt Italian patent had been anticipated by prior art, namely Gegauf and Vigorelli Italian patents, there was a litigable issue involving some risk to Singer.

Singer's Italian representative believed that Messerschmitt might undertake legal proceedings to protect its Italian patent. If Singer litigated and lost, Singer would be exposed to substantial liability of Messerschmitt. When transmitting the opinion of Italian patent counsel, Singer's Italian representative expressed the hope that the opinion would help Singer decide "whether or not it would be advisable to include Messerschmitt amongst the signers of the non-aggression pact". The representative was referring to the fact that Singer had made a cross-license [fol. 6815] agreement with Vigorelli and a cross-license

agreement with Gegauf and that the opinion of Italian patent counsel might be helpful to Singer in deciding whether to make a cross-license agreement with Messerschmitt.

That Singer was correct in its appraisal of the Messerschmitt position was borne out by Messerschmitt's attitude at the conference that it would succeed in the United States as well as in other countries. However, after examination of the "319" machine, Messerschmitt agreed that, since their respective machines were identical in essential principles, an amicable settlement would be to their mutual benefit as neither of them would profit from litigation.

Here again, the record discloses that the relation between Singer and Messerschmitt was far from intimate or confidential. Messerschmitt was full of confidence that it would prevail over all with its patent. Singer, in order to deflate this confidence of Messerschmitt, was pushing especially hard on its "Perla" United States application. Singer hoped that thus it might have an interference declared between the Singer and the Messerschmitt United States applications and thereby gain more bargaining power.

Because of its earlier invention date, Singer felt confident that it would prevail in the United States in its Perla application in spite of its later filing date and that, as soon as Messerschmitt learned of the interference (of which Singer did not inform it), Messerschmitt would come to Singer; but the converse of this would be true in Europe because of Messerschmitt's prior filings.

Singer's confidence, however, suffered a severe blow when in May 1956 it discovered that Messerschmitt had filed in Great Britain, the very country in which Singer was tooling its machine. Although the meeting with Messerschmitt was scheduled for August 1956, Singer kept putting it off until September 1956, to make sure that by that [fol. 6816] time Messerschmitt would learn of the interference Singer was anticipating between their respective United States applications. This interference was declared by the United States Patent Office on September 17, 1956. This interference involved a mechanism by which information is taken from each of a plurality of cams by its own follower.

A meeting was held subsequently at which the parties agreed to settle their patent conflict by cross-licensing. Pending the meeting, Singer withheld filing opposition to Messerschmitt's German patent application. This German application related to a construction of a manually operable means for controlling the lateral motion of the needle of a zigzag sewing machine. This was a construction which Singer had good reason to conclude was anticipated by the Singer-owned Tiesler German patent, which was about to expire. Singer, however, saw to it that Messerschmitt was advised of its claim of anticipation and of Singer's position that Messerschmitt's machine infringed the claim of the Tiesler German patent. Singer hoped that by this step it might bring Messerschmitt to a point where its attitude might be more conducive to fair bargaining. At this time Messerschmitt was becoming more difficult in its demands. In fact, Messerschmitt had stated that it would enter into no license agreement with Singer unless Singer agreed to let Messerschmitt manufacture machines for Singer.

On December 11, 1956, the Singer Patent Department drew up a report on the infringement status of the Singer "319" machine throughout the principal countries of the world. The report stated that:

> (1) The "319" machine infringed recently issued Belgian and Italian patents owned by Messerschmitt. Messerschmitt had corresponding applications in Germany and Great Britain, and it could be fairly presumed that patents would soon issue in those countries. [fol. 6817] (2) Messerschmitt had a corresponding application in the United States which was on the date of the report involved in interference with Singer's Perla application. Singer expected to prevail in this interference proceeding and receive claims that would cover the "319" machine and be infringed by the Messerschmitt machine.
>
> (3) The question confronting Singer was what action it should take in connection with Messerschmitt so that Singer could freely manufacture and market the "319" machine in Germany, Belgium, Italy and Great Britain.
>
> (4) It would be to Singer's advantage to have a cross-licensing agreement executed with Messerschmitt

as soon as possible in view of the present or potential infringement of the "319" machine in Italy and Great Britain.

(5) Messerschmitt undoubtedly realized that it would lose the United States interference proceeding and that its machine would be subject to an action for infringement by Singer, based on several Singer-owned patents.

Because of the inability of the parties to agree, Singer obtained a postponement of the Perla interference for Messerschmitt. Singer, however, directed immediate filing of opposition to the Messerschmitt German application. Singer went farther and explored and investigated the legal possibilities of a law suit against Messerschmitt on the Singer German patent, even though it had expired. As Singer's Patent Department described it, the situation contained all the ingredients for "a patent poker game with each party holding a good hand".

It was the opinion of Singer, however, that rather than lose its present market in the United States, and be in a position where it would have to enforce its patent against Singer in Great Britain and Italy, Messerschmitt would be willing to exchange royalty free licenses in Europe in [fol. 6818] exchange for a royalty free United States license, and this without insisting upon any further business promises of Singer.

In March 1957, Messerschmitt sent Singer an executed cross-licensing agreement which however was not acceptable to Singer for it failed to specify the machines to be licensed by Singer. A revised agreement was executed specifically limiting the license granted; and now we consider this revised agreement.

Under this agreement of April 16, 1957 made with Messerschmitt, Singer agreed not to bring any infringement action against Messerschmitt under the rights derived from patents issued or to be issued in any country with respect to subject matter disclosed in three annexed drawings which disclosed (1) a manually operated zigzag sewing machine, (2) a straight stitch sewing machine, and (3) a machine carried multiple cam zigzag machine. Messerschmitt in turn granted to Singer a license to manufacture and sell sewing machines embodying subject matter dis-

closed in Singer's two German patent applications, which disclosed the Singer "401" (Johnson) and "319" (Perla) machines.

The agreement permitted each to continue to manufacture and sell its respective machines without interference proceedings and protracted and expensive patent litigation, and without royalties. It ensured this for Singer and Messerschmitt agreed not to institute any opposition, nullity or invalidation proceedings against each other's patents or patent applications corresponding to Messerschmitt's constructions as illustrated in the drawings annexed to the agreement and to Singer's German applications and to settle any Canadian or United States interference. This provision was identical to that found in the Vigorelli agreement which we have found to be in all [fol. 6819] respects legal. There was no other understanding between the parties with respect to the licensing, enforcing or other use of their patents.

The freeing of the "319" machine from any claim by Messerschmitt without payment of royalties was extremely important since at that time Singer was selling its "319" machines at the rate of 65,000 per year in Europe. As a result of the agreement, Singer was not only free to continue to sell its machine but was released from all claim of liability for past infringement.

Complying with the understanding, Singer withdrew its interference to the Messerschmitt German application on the manually operable means.

It is conceded by the Government that Singer's reason and motive for entering into the license agreement with Messerschmitt was to free its "319" machine from any of Messerschmitt's patents. It contends, however, that, without the concerted action of Messerschmitt, Singer alone was acting in the accomplishment of the alleged conspiratorial purpose when Singer attempted to obtain an assignment of all Messerschmitt's patent applications and thus place Singer in a position to exclude others. The Government urges that although Singer acquired Messerschmitt's United States application but failed to acquire the patent, its attempts are evidence of this purpose and also of its intent to monopolize. The intent to monopolize is particularly evidenced, says the Government, by the fact that the

Messerchmitt patent application No. 548,481, which Singer acquired, encompassed more than was necessary to protect the "319" and "401" machines—namely, an automatic feeding mechanism which was not part of any machine Singer was then manufacturing or contemplating doing so (but in which it was interested for future development).

[fol. 6820] Under the assignment executed June 4, 1957, Messerschmitt assigned to Singer its United States application No. 548,481 in exchange for a non-exclusive, non-transferable, royalty free license to manufacture and sell sewing machines disclosed in the application or any patent which might be granted on it and for Singer's further agreement to use its best efforts to prosecute the application in order to acquire a good and valid patent if possible. The rights of the parties under the license of April 16, 1957 were specifically reserved, including the right in each party to license anyone else under the specified machines.

The Messerschmitt United States application had claims of a dual nature: (1) a stack of cams for controlling the lateral vibration of the needle bar which was common to the Singer Perla application and to the "319" machine; and (2) a claim which was not common to the "319" or any of the three machines drawn in the license agreement—i.e., a stack of cams used to control the feeding mechanism. Since neither the "319" nor the Messerschmitt machine embodied the latter concept, the license which Messerschmitt had given Singer did not encompass this mechanism. What Singer received therefore under the assignment was something in addition to that which it had received under the license agreement.

Following the assignment to Singer, the interference between Messerschmitt application No. 548,481 and the Singer Perla application was dissolved since Singer then owned both applications. On October 22, 1957, the Perla United States patent issued to Singer. Singer in accordance with its agreement did prosecute the subject matter of this Messerschmitt application, i.e., the feed mechanism, but was unsuccessful in obtaining a patent on it after several rejections, and accordingly abandoned it. Messerschmitt, when it assigned its application to Singer, gratis, was fully [fol. 6821] aware of the dubiousness of the claims which Singer at its own expense undertook to prosecute.

There was no agreement or understanding between Singer and Messerschmitt, and there was no promise or commitment made by either, that was not expressed in this agreement.

Singer then proceeded to negotiate for the acquisition of the foreign patents and patent application corresponding to the United States Messerschmitt application. In exchange for these, Singer was willing to prosecute these applications, pay the cost of obtaining the patents which had issued to date and the yearly fees for their maintenance and grant to Messerschmitt a license under each patent. Since Singer already had some twenty foreign patent rights concerning the Perla and "319" multicam zigzag mechanism, it was Singer's purpose to consolidate all these patents (its own twenty and Messerschmitt's ten patents covering multicam zigzag mechanism) in its hands in order that it might more diligently police and enforce the patents and protect the "319" machine. Although the expense of the acquisition of these was high and although Singer was licensed to sell in all these countries, it was thought worthwhile "if of any value to restrict Japanese especially Brother."

The proposal was first made in July 1957. Later, in October 1957 a draft agreement covering ten of Messerschmitt's foreign applications had been drawn up by Singer and submitted to Messerschmitt for approval. The patent applications which Messerschmitt was thought willing to assign included, among the zigzag mechanism, claims covering "certain reverse feeding means in connection with some other mechanisms of an automatic cambloek machine". The claims would be the first of this kind to be owned by Singer; they would constitute a worthwhile supplement to Singer's "automatic zigzag machine patents" even though [fol. 6822] they were considered as "not fundamental", except to the particular mechanism of the Messerschmitt style machine.

Although Singer was willing to pay for these patents, Messerschmitt was interposing stumbleblocks. During these negotiations, Messerschmitt had proposed that it be given an exclusive license with the right to sublicense with specific territories allotted among such sublicensees. This proposal of Messerschmitt was "pushed aside very quickly"

by Waterman of Singer on the ground that it was "under no circumstance acceptable, because this wording would mean a clear infringement of the antitrust law in the United States of America". In retort to the suggestion that such agreement be understood though not expressed, Waterman pointedly refused on the ground that the agreement must be complete and entirely truthful in all respects and that, if it were not, he would "not be able to declare with a good conscience that no additional arrangements had been made."

A flat price of $25,000 was suggested for all the patents and patent applications with an option to Singer to purchase the whole Messerschmitt sewing machine business. Messerschmitt was thinking of selling this for it had not been profitable, and as its anxiety grew Messerschmitt became more reluctant to part with its patents unless Singer also agreed to buy the business. This, Singer was not prepared to do, even though Singer saw no harm in having an option to do so, and in fact, saw some possible good in this, since it would then know something of business conditions at Messerschmitt.

Singer went so far as to tell Messerschmitt that it really did not need Messerschmitt's foreign patents for any new machine in construction or being designed, but that it was interested in acquiring them merely to supplement its own similar patents. Sincer renewed its offer of $25,000 and in addition offered to accept Messerschmitt's proposal that [fol. 6823] in the event of purchase, consent be given to the granting of a license to a possible purchaser of Messerschmitt's business. This was to no avail; Singer never obtained Messerschmitt's foreign patent rights or application corresponding to United States patent application No. 548,481.

The Government makes much of the fact that the Messerschmitt United States application contained the feed mechanism not embodied in the "319" or any other Singer machine, and contends that Singer's efforts to obtain it despite this fact is evidence of Singer's intent to acquire as many patents as necessary, whether essential to its business or not, to frighten off competition. However, the fact remains and it cannot be disputed that this application embodied the zigzag mechanism of the "319" which issued

on the Perla patent and on which Singer had spent considerable time and money. It is also the fact that it was one patent with these two features—one of which Singer needed and one of which it did not need for its "319" but would be happy to get.

Because Singer had been "behind the procession" of industry development and production in the zigzag field and had been anticipated on so many occasions, Singer had decided that good business policy dictated that it pass up no lawful opportunity to keep up with the latest developments. As Singer correctly summed it up when it negotiated the Messerschmitt license, Singer was behind in the zigzag field and Singer was "skating on some pretty thin ice" commercially in its offerings in the market place.

The automatic feed mechanism, Singer had been advised, had good selling points and was attractive to a user. While Singer was not manufacturing such a machine at the time or contemplating doing so, it wanted to acquire the feed mechanism in the event it should decide to do so in the future.

[fol. 6824] In 1960, Singer did pay Vigorelli $25,000 for a license on a machine incorporating an automatic feed mechanism.

The fact that at the very same time Singer was negotiating for Gegauf's United States application concerning its "401," while interesting, is not significant or indicative of wrongdoing. There is not a scintilla of evidence that either Gegauf or Messerschmitt knew of each other's contemporaneous dealings with Singer. At no time in the dealings between Messerschmitt and Singer was that fact mentioned. The negotiations with Messerschmitt straddled a period commencing prior to its license with Vigorelli and terminating after the assignment of Gegauf I, but nowhere does it appear that Vigorelli or Gegauf played any part in Singer's dealings with Messerschmitt.

2. The further effectuation of the alleged conspiracy

As further proof of the alleged conspiracy, the Government points to the license given by Singer to Sears Roebuck Company under the Gegauf patent, the institution of Tariff Commission proceedings, and the filing of infringement suits by Singer against Japanese imports. The fact that

Singer licensed Sears Roebuck Company, and the license itself shows, the Government contends, that the conspiracy was directed solely against Japanese imports because Singer thereby was free and willing to license European imports without consulting Gegauf or Vigorelli but unwilling to license Japanese imports.

The Sears Roebuck license came about from these facts: Sears Roebuck was desirous of importing a West German machine—"Sears Roebuck Model 89"—which it feared might infringe on the Singer Gegauf patents. Singer did not feel that this Sears "Model 89" would infringe any patent which might issue under the Gegauf divisional ap- [fol. 6825] plication, and in fact it so informed Sears Roebuck. It was Sears Roebuck who insisted upon being licensed under both Gegauf patents.

While it was not Singer's policy to license a competitor under a patent, because Sears was a good customer of one of Singer's subsidiaries, Singer "felt constrained to acquiesce to a limited extent in the request for a license" even at a time when such a license might jeopardize its success in the Tariff Commission proceedings.

Under the license executed on January 19, 1959, Singer granted Sears Roebuck Company a non-exclusive, non-transferable license to import and sell throughout the United States machines illustrated therein known as "Sears Model 89", which was covered by Gegauf I and which might be contended was covered by Gegauf II. In exchange for this, Singer received from Sears Roebuck a royalty on each machine to be calculated at the option of Sears under either a minimum total of $75,000 per year or a fixed price of $7.50 on each machine sold. In 1959 Singer received in royalties from Sears Roebuck a total of $116,895 and in 1960, $75,435. In 1961 Sears Roebuck discontinued the importation and sale of any machine covered by Gegauf I and replaced its imports with a zigzag machine of Japanese manufacture.

The fact that in two years Singer received almost twice as much from the Sears Roebuck license as Gegauf collected for the sale of its patent to Singer does not buttress the conclusion drawn by the Government that Gegauf was willing to part with a valuable property right at a low price in exchange for action by Singer against their common

competitors. No part of the money which Singer was paid by Sears Roebuck was ever shared with or paid to Gegauf. In fact, Gegauf did not even learn of the license until after its execution. When extending the license, Singer was acting independently and solely in its own business interest of keeping an important customer.

[fol. 6826] On January 15, 1959 Singer filed a complaint before the United States Tariff Commission alleging it was the owner of Gegauf Patent No. 2,832,302. The complaint prayed that the Tariff Commission recommend to the President that household automatic zigzag sewing machines and parts thereof covered by the claims of said United States Patent No. 2,832,302 be excluded from entry into the United States for the term of said patent. This led to the Tariff Commission investigation which is still pending. The proceeding before the Tariff Commission was stayed by the Commission upon the commencement of this suit by the Government against Singer and is being held in abeyance by it awaiting the outcome of this suit.

This filing with the Tariff Commission was after the acquisition of the Gegauf patent. It was followed and was the result of a discussion which Singer had with its patent counsel and with an attorney expert in tariff matters, concerning the inadequacy of infringement suits to protect its "401" machine. Before the filing, Singer did not consult with Gegauf or Vigorelli about taking this step. There is no evidence that Singer ever discussed such a step with either Gegauf or Vigorelli during any of its negotiations with them.

From the complaint before the Tariff Commission, it is clear that those proceedings were brought solely to exclude all imports which might infringe Gegauf I, as embodied in the Singer "401," which Singer was manufacturing and selling in great volume. Neither Gegauf patent II nor the Harris patent is involved in the Tariff Commission proceedings.

Numerous defendants were named by Singer in its complaint before the Tariff Commission as importers of infringing machines.

[fol. 6827] Husqvarna, a Swedish manufacturer of household sewing machines with whom Singer had had business relations for over a century, was one of the named de-

fendants. Because of its long acquaintance and its desire to secure a license from Singer under the Gegauf patent, Husqvarna was reluctant to oppose Singer in the proceedings and instead proposed a "gentlemen's agreement" that if it did not oppose Singer in the proceedings, Singer would at the conclusion of the proceedings grant it a license. Singer declined the proposal. Singer stated that it could not consult with Husqvarna as to what course it should take and that it was not free to enter into any such agreement, but Singer did state that it did not intend to offer any proof respecting Husqvarna's infringement unless the latter did. The net result of the request of Husqvarna was a tactful refusal by Singer, with the perfectly lawful and understandable reluctance not to alienate a prospective customer with whom Singer had long had business dealings. Husqvarna remains in the tariff proceedings as an alleged infringer; no license has been granted to it. The fact that Singer did not intend to offer proof as to Husqvarna's infringing machine is of no particular or special importance since Husqvarna is but one of 28 manufacturers named in the proceedings. Husqvarna imports amount only to 3,000 machines a year!

Another importer named as a defendant was Phoenix, a West German manufacturer of household machines. Phoenix wrote to Singer denying any infringement on the ground that it had a prior license from Gegauf (a defense which it has not raised before the Tariff Commission). Phoenix suggested a settlement with Singer. Although Singer doubted this license since Gegauf had never mentioned Phoenix, Singer felt it was not then in any position to discuss the question of a license, or become involved in a controversy over the matter of the claimed license, and so [fol. 6828] informed Phoenix. From this, the Government draws the inference and conclusion that Singer was leaving itself open to license Europeans in the future once it had disposed of the Japanese infringers. Here again, however, there is a lawful inference which can be drawn—that is not to antagonize an adversary and possibly a prospective customer.

Finally, there is the matter which arises from the deletion from the assignment agreement of Pfaff as a European importer against whom Singer could not assert its patent

without the consent of Gegauf. While Singer in its complaint before the Tariff Commission had alleged the existing licenses with Gegauf, Vigorelli and the proposed license to Sears Roebuck Company, it had not alleged the agreement with Gegauf with respect to Pfaff. During the hearing before the Commission, Singer was asked whether Pfaff was licensed under the Gegauf I patent to which Singer replied in the negative. Singer felt that the Commission was not convinced of the truth of this and therefore requested Gegauf to execute a revised agreement deleting Pfaff's name and all reference to Pfaff. The sole motive and reason prompting this deletion was very plainly and unequivocally expresed by Singer; it was that Singer might "have a better chance of prevailing before the Tariff Commission" in its efforts to exclude all machines which infringed on Gegauf I. Gegauf consented on condition that the name of Phoenix be substituted for Pfaff. Gegauf explained that prior to the 1957 assignment to Singer, it had in 1955 licensed Phoenix under its German patent for the area of West Germany and that, although Gegauf did not believe that Phoenix had any right under Gegauf I in the United States, it was worried that Phoenix might seek damages against Gegauf for not reserving rights to it under the Gegauf patent in the United States. However, Gegauf offered, in the event that this arrangement was not satisfactory, to consent to the deletion on the explicit [fol. 6829] condition that Singer assume all legal consequences and to that extent protect Gegauf.

While Gegauf was willing to help Singer, it was only willing to do so if the assistance involved no risk to itself.

Following on the heels of the Phoenix letter claiming a license under the patent, Gegauf's statement confirming the existence of some sort of license came as an unpleasant surprise to Singer. Although, like Gegauf, Singer did not interpret the license to Phoenix as extending outside of West Germany, Singer was annoyed that Gegauf had not, as required by paragraph 6 of their assignment agreement disclosed its existence to Singer—particularly in view of the fact that this provision had been inserted in the agreement at Gegauf's suggestion. Here, certainly, was further evidence of the arm's length dealing which had characterized all Singer's dealings with Gegauf.

Much as Singer disliked Gegauf's attitude, it needed Gegauf's assistance in the Tariff Commission proceedings and in order to get it, Singer had to submit to the condition imposed. Thereupon, on July 14, 1959, Singer executed an indemnity agreement in protecting Gegauf against damage it might sustain from any claim of Phoenix. The revised agreement was signed by Gegauf on July 22, 1959. On the same day, Gegauf executed an affidavit stating that the reason it had requested a provision in the 1957 assignment that Singer not assert its patent against Pfaff without Gegauf's consent was the existence of a personal friendship with Pfaff's directors, and that it had not before nor since licensed or extended any rights to Pfaff under either Gegauf patent.

We are not at all concerned here with Gegauf's purpose or intent. It was Singer who was a plaintiff before the Commission. While Singer was technically correct in say-
[fol. 6830] ing that Pfaff was not licensed by it under Gegauf, and while it appears that Gegauf never did extend any right to Pfaff under Gegauf I, the effect of the 1957 agreement was to permit Gegauf to give Pfaff a sublicense should it choose to do so.

The fact that no license was ever given to Pfaff bears on the truth of Singer's statement to the Commission that Pfaff had no license under Gegauf I—the only patent with which the Commission was concerned.

We find that the Tariff Commission proceedings were brought by Singer in a bona fide attempt to obtain protection for its "401" machine by an order excluding *all* unlicensed machines which infringed on Gegauf I patent. That these proceedings were motivated by the deluge of infringing Japanese imports and that Singer's energies were primarily directed to excluding these imports is not evidence of any unlawful conspiracy to exclude the Japanese and open the way for the European imports. The principal threat to the Singer machine came from the Japanese imports not from European production, but Singer sought to bar all infringing machines. Nor do we find any evidence whatsoever in this tariff proceeding of an intent or attempt to monopolize the United States household automatic zigzag sewing machine industry. As a patent owner

whose patent was being infringed by imports, Singer had every right to resort to the Commission.

There were four law suits filed by Singer following the acquisition of the Gegauf patents. Two of these suits were filed by Singer against Brother, the importer and distributor of sewing machines manufactured in Japan whom we have mentioned before, for alleged infringement of the Gegauf, Harris reissue and Johnson patents based on the sale of Japanese Nippon machine carried multicam zigzag machines (Selec-o-matic 100 and Pacesetter 200). The [fol. 6831] defendant Brother has pleaded nonvalidity, and the actions are presently pending. A suit has also been filed against Sewing Machine Exchange, alleging infringement of Gegauf and Harris patents based on the sale of Japanese Sanshin machine carried multicam zigzag machines (Universal). The fourth suit was filed against ACO alleging infringement of Gegauf, Harris and Johnson patents based on the sale of a Japanese Sanshin machine carried multicam zigzag machine (Fleetwood). The latter two suits terminated in a consent judgment enjoining defendants from selling any machine embodying the inventions in said patents.

It does not appear that Singer has filed any infringement suits on any patent which did not cover an article being manufactured or sold by it. The fact that it has instituted action on the Gegauf patent, thus placing squarely in issue its validity, as well as the validity of its other patents, belies any intent on its part to acquire broad patent protection regardless of validity.

G. Alleged per se illegality of the Singer-Gegauf agreements

It is the Government's contention that aside from the unlawfulness of the Singer-Gegauf agreements as part of the alleged conspiracy, the license agreement is *per se* illegal under Sections 1 and 2 of the Sherman Act, by reason of the provision under which each party agreed not to do anything directly or indirectly to restrict the other's claims in the respective patent applications, and the assignment agreement by reason of the provision restricting Singer's right to assert the Gegauf patent against Vigorelli and Pfaff without Gegauf's consent.

We have already discussed the first of the provisions and have found nothing unlawful in it. No authority has been cited by the Government to support its contention of *per se* illegality. In spite of the sinister inference which the Government attempts to draw from this first provision, it does [fol. 6832] not contend that either Singer or Gegauf was under any "affirmative duty or obligation to seek to narrow or hold unpatentable claims which are in interference", but that conversely each was prohibited from agreeing with the other not to do that which it was under no legal duty to do.

We have found that there is nothing illegal in two parties agreeing not to oppose each other's claims, especially when these claims are not invalid and form the subject matter of an agreement between the parties. But even assuming, for the sake of discussion, that such provisions were illegal, no acts were done pursuant to this agreement and the claim of Gegauf I was concededly valid (Cf. *U. S.* v. *National Lead Co.*, 63 F. Supp. 513, affd. 332 U. S. 319; *United States* v. *Standard Oil Co.*, 33 F. 2d 617).

The Government concedes that it has found no authority in support of its charge of illegality and it would be astounding if it had.

Recognizing the weakness of the charge standing alone, the Government relates this provision to an alleged underlying agreement or alleged conspiracy to "pool patents" in Singer and to establish "broad patent monopolies" in both conspirators in order to exclude Japanese competition. The plain answer to this is that we have found that there was absolutely no agreement or conspiracy.

As for the second provision, the Government says it is a *per se* violation of the anti-trust laws in that it has been held that a patentee and his licensee may not jointly determine between themselves the parties to be licensed or sued. *United States* v. *Besser*, 96 F. Supp. 304, affd. 343 U. S. 444; *United States* v. *Krasnov*, 143 F. Supp. 184; *Mason City Tent & Awning Co.* v. *Clapper*, 144 F. Supp. 754. We believe that the contention of *per se* illegality was apparently abandoned during the trial; the Government however, does attempt to relate it to the overall conspiracy. [fol. 6833] The defendant's answer is that this provision is not an agreement calling for joint decision as to who

should be licensed or sued but is, in effect, a grant to Gegauf of the right to sublicense Pfaff or Vigorelli—Gegauf granting the license by independently refusing to give assent to an infringement suit by Singer against the latter. The provision now has no special significance when weighed with all the evidence; it was expunged from the assignment, prior to the filing of the suit, at Singer's request. Of course, the mere fact of deletion, if the provision were in fact illegal, would not remove it from our consideration, for its existence might be some evidence tending to point to an illegal purpose or understanding to "pool" patents in the hands of Singer. Although it might be argued that the effect of the provision in question is as if Gegauf had been given the right to sublicense Pfaff or Vigorelli, that is not its language and the only question is whether the restriction could constitute a *per se* violation of the Sherman Act.[1]

An examination of the patent anti-trust cases, dealing with restrictions other than price fixing, shows that rarely is a single restriction involved. Thus, while the Court has clearly condemned a restriction requiring the consent of the non-exclusive licensee before the patentee may grant a license to another (*United States* v. *Besser Mfg. Co., supra*), a restriction, as here, requiring joint approval of the patentee and the non-exclusive licensee before an infringement suit can be brought, has been condemned only as a part of a host of abuses, the total of which were found to be in violation of the Sherman Act. *Mason City* v. *Clapper, supra; United States* v. *Krasnov, supra.*

[fol. 6834] This is not a situation where restrictions were imposed upon a patent holder as to whom it might license. In the first place, Singer was free to license its patent to as many or as few as it chose, and Gegauf had nothing to

---

[1] It should be noted that it was of no practical significance with respect to Vigorelli since Singer by the cross-license agreement of November 17, 1955 had already licensed Vigorelli to sell its multicam machine in the United States and, therefore, could not bring any infringement action against Vigorelli in any event. Thus, properly interpreted, this provision restricted Singer's freedom to enforce the Gegauf patents only with respect to Pfaff.

say about it. In the second place, although the necessity to obtain the consent of Gegauf before Singer could sue Pfaff for infringement might at first appear to come within the prohibition of *Mason City* and *Krasnov* it is distinguishable on several grounds. This was the only restriction on Singer's ownership; it was limited to one specific company; it was a conditional and future restriction which might never come to pass and which in fact did not; and finally there was nothing to prevent or stop Singer from permitting any other number of importers to compete with Pfaff, either by the express grant of a license or by non-assertion of its patent.

Moreover, since Singer did not intend to license others under its patent, the exercise of the restriction would serve to promote rather than restrict competition in that Gegauf, by bringing its veto power to bear, could enable Pfaff and Vigorelli to continue to compete with Singer and with Gegauf itself. If, on the other hand it be viewed as an unlawful restraint in that such a provision gave Gegauf by agreement the power to prefer one competitor over another, by permitting Pfaff to import free of threat of infringement, the matter has become academic by reason of the fact that it has been deleted from the agreement.

Aside from this there was no other understanding or agreement with respect to licensing or enforcing by infringement action or otherwise, any patent, then owned or subsequently acquired, or with respect to the use in any way of any such patent, alone or in conjunction with any other patent. The written agreement expressed the complete agreement and understanding of the parties and we conclude that it contained nothing illegal.

[fol. 6835] H. The alleged attempt to monopolize

With respect to the monopoly charge, the Government's theory is:

1) that there was a conspiracy to achieve for Singer a monopoly in the sale and distribution of automatic zigzag sewing machines by the exclusion from the United States of all such machines of Japanese origin;

2) that Singer by itself sought to achieve such a monopoly by excluding all such machines regardless of origin

and by preventing their domestic manufacture, thereby entrenching itself as the sole source of supply;

3) that even if the alleged conspirators' conduct does not establish a conspiracy in restraint of trade under Section 1, it does establish a conspiracy to monopolize; and

4) that even if no conspiracy to either restrict or monopolize is found, Singer's acts establish an attempt on its part to monopolize.

The same conduct is relied upon to establish the conspiracy and attempt to monopolize as was relied upon to establish the conspiracy to restrain trade.

Our finding that there was no conspiracy among Singer, Gegauf and Vigorelli to do anything disposes of the charge that there was a conspiracy to monopolize for Singer.

And now, we turn to consider the allegation that there was an attempt to monopolize. Under Section 2 an attempt to monopolize has been made a violation separate and distinct from a conspiracy to restrain trade or to monopolize. A finding, therefore, that certain conduct does not constitute a violation of Section 1 or a conspiracy to violate Sections 1 or 2, does not necessarily preclude a finding that the same conduct is an attempt to violate Section 2, provided it is accompanied by a specific subjective [fol. 6836] intent to achieve a monopoly. *United States* v. *Columbia Steel Co.*, 334 U. S. 495, 531; *Swift* v. *United States*, 196 U. S. 375, 396.

Our conclusion, therefore, that in acquiring the Gegauf and Messerschmitt applications Singer was motivated by entirely lawful and "sound business reasons" is not dispositive of the charge that in doing so it was engaged in an attempt to monopolize the household automatic zigzag sewing machine industry in the United States. *United States* v. *Columbia Steel Co.*, *supra*, at p. 518.

It is the Government's contention that the purpose of Singer in acquiring the Gegauf and Messerschmitt patent applications was to be in a position to prevent the importation and sale of Japanese made machines which, because of their lower price were in substantial competition with Singer and prevent the manufacture of these machines in the United States.

The Government argues that this purpose was clearly manifested by (1) the refusal of Singer to license under

its patents; (2) the filing of infringement suits and Tariff Commission proceedings against competitors; and (3) Singer's own words that it wanted to get the very best patents "to bar imports or United States production of mechanisms which would violate these patents" and that the acquisition of Messerschmitt's foreign application would be "very much worthwhile . . . if of any value to restrict Japanese especially Brother."

Certainly, the very limited acquisition of Singer (two patent applications) cannot even be discussed in the same context with the acquisitions condemned in *United States* v. *United Shoe*, 110 F. Supp. 295, affd. p.c. 347 U. S. 521, which the Government cites in support of its charge. The fact that Singer was most reluctant to license under its patents and did so to Pfaff only under protest, does not [fol. 6837] add a whit to establishing an unlawful intent. The same observation may be made of the fact that Singer did license Sears Roebuck under its Gegauf patent thereby permitting the importation into the United States of 20,000 zigzag sewing machines. This, as well as the filing of infringement suits and the Tariff Commission proceedings, was its prerogative as a patent owner. We have been cited to no case which imposes a duty on the owner of a patent to license others or suffer infringement of its patent in order to escape a charge of intent to monopolize. The exclusion of competition through patent ownership is the lawful result of the monopoly which the law grants to a patent owner.

Singer's refusal to grant licenses to competitors and its attempt to eliminate infringers, leaving as competitors all manner of sewing machines with devices capable of doing the same thing over which Singer had no control, indicates no intent nor attempt to achieve an illegal monopoly. *United States* v. *General Electric*, 80 F. Supp. 989; *Cole* v. *Hughes Tool Co.*, 215 F. 2d 924, *cert. den.* 348 U. S. 927; *Dollac Corp.* v. *Margon Corp.*, 164 F. Supp. 41. These were acts which were perfectly consistent with a lawful intent and purpose to protect its patents and machines.

It is, therefore, unnecessary to consider at length Singer's power to achieve a monopoly in the relevant market as bearing on its intent. If it were necessary to our decision, we would find the relevant market to be automatic zigzag

sewing machines of four types: machine carried multicam zigzag, replaceable cam, manually operated and the straight stitch sewing machine with zigzag attachment. These four machines, we find, are sufficiently unique to constitute a separate market within which these machines are reasonably interchangeable for the use to which they are put. *United States* v. *Du Pont*, 351 U. S. 377, 395, 396. Within the market as defined the evidence clearly establishes that [fols. 6838-6839] Singer did not have the power to achieve a monopoly; this lack of power further evidences absence of a specific intent on Singer's part to achieve a monopoly. *U. S.* v. *Columbia Steel, supra.*

The Government has failed on all the evidence to support its charge that Singer attempted to monopolize as it has failed to support any and all of the unlawful acts charged against Singer in the complaint. *United States* v. *Yellow Cab*, 332 U. S. 218, 225.

III. Conclusions of Law

We conclude therefore that:

1. This Court has jurisdiction over the defendant and the subject matter of this suit.

2. Defendant did not conspire with the alleged co-conspirators to unreasonably restrain interstate and foreign commerce in violation of Section 1 of the Act.

3. Defendant did not conspire with the alleged co-conspirators to monopolize nor attempt by itself to monopolize interstate and foreign commerce in violation of Section 2 of the Act.

The Clerk is directed to enter judgment dismissing the complaint herein on the merits.

Sylvester J. Ryan, Chief Judge.

May 11th, 1962.

[fols. 6840-6841] [File endorsement omitted]

IN UNITED STATES DISTRICT COURT, SOUTHERN DISTRICT OF NEW YORK

Civil 154-108

UNITED STATES OF AMERICA, Plaintiff,

vs.

THE SINGER MANUFACTURING COMPANY, Defendant.

JUDGMENT—May 17, 1962

The above-entitled action having come on for trial before the Honorable Sylvester J. Ryan without a jury (both sides being represented by counsel) on May 2, 3, 4, 9, 10, 11, 15, 16, 18, 19, 22, 23, June 1, 2, 5, 6, 12, 19, 20, 21, 22, 26 and 27, 1961; and the court, in an amended and corrected opinion dated and filed May 11, 1962, having directed the Clerk to enter judgment dismissing the complaint herein on the merits; it is.

Adjudged: The defendant The Singer Manufacturing Company have judgment against the plaintiff United States of America *nunc pro tunc* as of May 11, 1962.

Dated: New York, N. Y., May 17, 1962.

Herbert A. Charlson, G.S.S., Clerk.

Approved: May 17, 1962.

Sylvester J. Ryan, Chief Judge.

[fol. 6842] [File endorsement omitted]

IN UNITED STATES DISTRICT COURT FOR THE SOUTHERN DISTRICT OF NEW YORK

Civil Action No. 454-108

UNITED STATES OF AMERICA, Plaintiff,

v.

THE SINGER MANUFACTURING COMPANY, Defendant.

NOTICE OF APPEAL TO THE SUPREME COURT OF THE UNITED STATES—Filed June 29, 1962

I. Notice is hereby given that the United States of America, the plaintiff above named, hereby appeals to the Supreme Court of the United States from the final judgment entered in this action on May 17, 1962, *nunc pro tunc* as of May 11, 1962. If the Clerk's docket entry on May 1, 1962 is deemed to be the final judgment of the Court dismissing the Complaint, the United States of America hereby appeals from that judgment.

This appeal is taken pursuant to 15 U.S.C. 29.

II. The Clerk will please prepare a transcript of the record in this cause for transmission to the Clerk of the Supreme Court of the United States, and include therein the entire record before the District Court, including all papers filed with the Clerk of the Court in this proceeding, the transcript of the trial proceedings, all exhibits submitted by the parties, and this Notice of Appeal.

III. The question presented by this appeal is whether the defendant, the only significant United States manufacturer of household sewing machines, violated Sections [fol. 6843] 1 and 2 of the Sherman Act by its conduct in seeking to prevent others from manufacturing or selling a new type of household zigzag sewing machine (the machine carried multiple-cam type, referred to as a multi-cam machine) in the United States.

This question involves the following principal issues:

(1) Whether the defendant, in violation of Sections 1 and 2 of the Sherman Act, entered into a combination or con-

spiracy with a foreign competitor to acquire the latter's multi-cam patents, under which it already held a license, for the purpose of using those patents together with its own patents covering multi-cam machines to eliminate Japanese-made machines of that type from the United States market.

(2) Whether the defendant, in violation of Section 2 of the Sherman Act, attempted to monopolize the manufacture and sale of multi-cam machines by acquiring patents for the purpose of using them to prevent others from manufacturing or selling such machines in the United States.

(3) Whether the defendant entered into a contract in restraint of trade and attempted to monopolize multi-cam machines, in violation of Sections 1 and 2 of the Sherman Act, by agreeing with a foreign competitor that each would, in a Patent Office interference proceeding, (a) refrain from seeking to have held unpatentable, or otherwise restrict the scope of claims in each other's pending United States patent applications and (b) facilitate the granting of the broadest possible United States patents to each other.

/s/ William J. Elkins, /s/ Les J. Weinstein, /s/ Edward F. Corcoran, Attorneys, Department of Justice.

[fols. 6844-6919] PROOF OF SERVICE (omitted in printing)

[fol. 6920] [File endorsement omitted]

IN UNITED STATES DISTRICT COURT, SOUTHERN DISTRICT OF NEW YORK

Civil Action No. 154-108

UNITED STATES OF AMERICA, Plaintiff,

v.

THE SINGER MANUFACTURING COMPANY, Defendant.

ORDER EXTENDING TIME IN WHICH TO DOCKET CASE—August 2, 1962

Upon application of plaintiff-appellant, and upon consent of respondent, and for good cause shown in accordance with Rule 13 of the Revised Rules of the Supreme Court it is hereby,

Ordered that the time within which to docket the above case and to file the record on appeal in the Supreme Court of the United States is hereby extended from August 28, 1962 to and including September 15, 1962.

Dated: August 2nd, 1962.

Sylvester J. Ryan, Chief Judge.

Consented to: Edward F. Corcoran, Attorney for Plaintiff-Appellant, Edward A. Miley, Attorney for Defendant-Appellee.

[fols. 6921-6924] [File endorsement omitted]

IN UNITED STATES DISTRICT COURT, SOUTHERN DISTRICT OF NEW YORK

Civil Action No. 154-108

UNITED STATES OF AMERICA, Plaintiff,

v.

THE SINGER MANUFACTURING COMPANY, Defendant.

ORDER EXTENDING TIME IN WHICH TO DOCKET CASE—September 12, 1962

Upon application of plaintiff-appellant, and upon consent of respondent, and for good cause shown in accordance with Rule 13 of the Revised Rules of the Supreme Court it is hereby,

Ordered that the time within which to docket the above case and to file the record on appeal in the Supreme Court of the United States is hereby extended from September 15, 1962 to and including September 18, 1962.

Dated: September 12, 1962.

Sylvester J. Ryan, Chief Judge.

Consented to: Winthrop, Stimson, Putnam & Roberts, Attorneys for Defendant-Appellee.

[fol. 6925] SUPREME COURT OF THE UNITED STATES, OCTOBER TERM, 1962

No. 438

UNITED STATES, Appellant,

vs.

THE SINGER MANUFACTURING COMPANY.

ORDER NOTING PROBABLE JURISDICTION—December 3, 1962

Appeal from the United States District Court for the Southern District of New York.

The statement of jurisdiction in this case having been submitted and considered by the Court, probable jurisdiction is noted.

☆ U. S. GOVERNMENT PRINTING OFFICE: 1963 672327 784

INDEX

	Page
Opinion below	1
Jurisdiction	1
Questions presented	2
Statute involved	3
Statement	3
The questions are substantial	14
Conclusion	26
Appendix	1a

CITATIONS

Cases:

American Column & Lumber Co. v. *United States*, 257 U.S. 377	19
American Tobacco Co. v. *United States*, 328 U.S. 781	19
Edward Katzinger Co. v. *Chicago Metallic Mfg. Co.*, 329 U.S. 394	24
Ethyl Gasoline Corp. v. *United States*, 309 U.S. 436	17
Fashion Originators' Guild v. *Federal Trade Commission*, 312 U.S. 457	15, 18
Hartford-Empire Co. v. *United States*, 323 U.S. 386	2
Interstate Circuit Inc. v. *United States*, 306 U.S. 208	19
Klor's, Inc. v. *Broadway-Hale Stores, Inc.*, 359 U.S. 207	15, 18, 21
Lorain Journal Co. v. *United States*, 342 U.S. 143	21
Orion Co., In re, 71 F. 2d 458	10
Precision Instrument Mfg. Co. v. *Automotive Maintenance Mach. Co.*, 324 U.S. 806	23, 25
Radiant Burners, Inc. v. *Peoples Gas Light & Coke Co.*, 364 U.S. 656	15
Scott Paper Co. v. *Marcalus Mfg. Co.*, 326 U.S. 249	24
Sola Electric Co. v. *Jefferson Electric Co.*, 317 U.S. 173	24
Standard Oil Co. v. *United States*, 283 U.S. 163	17, 25
Swift & Co. v. *United States*, 196 U.S. 375	21
Timken Roller Bearing Co. v. *United States*, 341 U.S. 593	25

Cases—Continued

	Page
Transparent-Wrap Mach. Corp. v. *Stokes & Smith Co.*, 329 U.S. 637	17
United States v. *Besser Mfg. Co.*, 96 F. Supp. 304, affirmed, 343 U.S. 444	17
United States v. *du Pont & Co.*, 351 U.S. 377	22
United States v. *Krasnov*, 143 F. Supp. 184, affirmed *per curiam*, 355 U.S. 5	17
United States v. *Line Material Co.*, 333 U.S. 287	2, 17
United States v. *Masonite Corp.*, 316 U.S. 265	19
United States v. *National Lead Co.*, 63 F. Supp. 513, affirmed, 332 U.S. 319	18
United States v. *Parke, Davis & Co.*, 362 U.S. 29	19
United States v. *Socony-Vacuum Oil Co.*, 310 U.S. 150	25
United States v. *Standard Oil Co.*, 33 F. 2d 617, reversed, 283 U.S. 163	25
United States v. *Trenton Potteries Co.*, 273 U.S. 392	25
United States v. *United States Gypsum Co.*, 333 U.S. 364	2
Von Clemm, In re, 229 F. 2d 441	10
Statutes:	
Sherman Act, 26 Stat. 209, as amended, 15 U.S.C. 1 *et seq.*:	
Section 1	3, 22, 25
Section 2	3, 20
19 U.S.C. 1337	10
Miscellaneous:	
Ladd, *Business Aggression Under The Patent System*, 26 U. Chi. L. Rev. 353	23
Opposition and Revocation Proceedings in Patent Cases, Study No. 4, Subcommittee on Patents, Copyrights and Trademarks, 84th Cong., 2d Sess.	23
Rules of the United State Patent Office:	
37 C.F.R. 1.232	23
37 C.F.R. 1.233	23

In the Supreme Court of the United States

OCTOBER TERM, 1962

No. —

UNITED STATES OF AMERICA, APPELLANT

v.

THE SINGER MANUFACTURING COMPANY

ON APPEAL FROM THE UNITED STATES DISTRICT COURT FOR THE SOUTHERN DISTRICT OF NEW YORK

JURISDICTIONAL STATEMENT

OPINION BELOW

The opinion of the district court (App., *infra*, pp. 1a–82a) is not yet reported.

JURISDICTION

On May 1, 1962, the district court filed an opinion directing the clerk to enter judgment dismissing the government's complaint. On May 17, 1962, the district court filed an amended and corrected opinion directing the clerk to enter judgment dismissing the complaint, and final judgment was entered on that date *nunc pro tunc* May 11, 1962 (App., *infra*, p. 83a). The United States filed a notice of appeal

on June 29, 1962. By orders entered in the district court on August 2, 1962, and September 12, 1962, the time for docketing this case on appeal was extended to and including September 18, 1962. The jurisdiction of this Court is conferred by Section 2 of the Expediting Act, 32 Stat. 823, as amended, 15 U.S.C. 29. *United States* v. *Line Material Co.*, 333 U.S. 287; *United States* v. *United States Gypsum Co.*, 333 U.S. 364; *Hartford-Empire Co.* v. *United States*, 323 U.S. 386.

QUESTIONS PRESENTED

1. Whether defendant and a foreign competitor, by combining in defendant's hands patents of a certain type of sewing machine, for the purpose of excluding Japanese and other imported sewing machines of that type from the United States market more effectively than either party could by independent action, violated Sections 1 and 2 of the Sherman Act.

2. Whether the acquisition and use of these patents by defendant—the only domestic manufacturer of such sewing machines—with the intent to exclude competing machines from the United States, constitutes an attempt to monopolize in violation of Section 2 of the Act.

3. Whether an agreement between defendant and the same competitor, executed in connection with the above combination, was an unreasonable restraint of trade in violation of Section 1 of the Sherman Act, in that each undertook, with respect to the patents or pending patent applications of the other, to refrain from any action which might restrict the

scope of the other's claims, and to facilitate the granting of claims of the broadest possible scope.

STATUTE INVOLVED

Sections 1 and 2 of the Sherman Act, 26 Stat. 209, as amended, 15 U.S.C. 1, 2, provide in pertinent part:

> SEC. 1. Every contract, combination in the form of trust or otherwise, or conspiracy, in restraint of trade or commerce among the several States, or with foreign nations, is declared to be illegal: * * *. Every person who shall make any contract or engage in any combination or conspiracy declared * * * to be illegal shall be deemed guilty of a misdemeanor * * *.
>
> SEC. 2. Every person who shall monopolize, or attempt to monopolize, or combine or conspire with any other person or persons, to monopolize any part of the trade or commerce among the several States, or with foreign nations, shall be deemed guilty of a misdemeanor * * *.

STATEMENT

This is a direct appeal from a final judgment of the district court dismissing the government's civil antitrust suit, which charged The Singer Manufacturing Company ("Singer") with violating Sections 1 and 2 of the Sherman Act, 15 U.S.C. 1, 2, by combining and conspiring with others to restrain and monopolize, and by unilaterally attempting to monopolize, trade in household automatic "zigzag" sewing machines.

The government's complaint, filed on December 22, 1959, alleged, *inter alia* (p. 5), that Singer obtained an assignment of patent rights from a Swiss corporation, co-conspirator Fritz Gegauf, A.G. ("Gegauf"), for the purpose of preventing the importation into the United States of automatic "zigzag" sewing machines manufactured in Japan, and that it used the assigned patents, in conjunction with its own, to prevent importation into the United States of automatic zigzag sewing machines of foreign manufacture.[1] After trial, the district court (Chief Judge Ryan) dismissed the complaint, holding that a violation of the Sherman Act had not been established.

1. The pertinent facts, which are not in dispute, are as follows:[2]

Singer, a vertically integrated manufacturer of household sewing machines, is (with one minor exception not pertinent here) the only United States manufacturer of such machines (App., *infra*, p. 17a). Its sole competition in the sale of household sewing machines in the United States comes from machines imported into this country (*ibid.*). Singer produces three types of household sewing machines, *i.e.*, straight stitch, replaceable cam and machine-carried multiple-cam zigzag stitch (*id.* at 19a). The latter type

[1] The complaint (p. 2) also named as a co-conspirator Arnaldo Vigorelli, S.p.A. ("Vigorelli"), an Italian corporation.

[2] This summary of the facts is based primarily upon the findings of the district court. We also rely upon a stipulation of facts entered into by the parties and uncontroverted government exhibits which were obtained by discovery from the defendant. "Gx. —" refers to government exhibits; "Dx. —" refers to defendant's exhibits. The stipulation of facts is cited as "Stip. —".

("multi-cam"), which is the subject of this litigation and accounts for 45% of Singer's sewing machine business, is an automatic machine containing a built-in mechanism that permits the operator to select any one of a large number of different "zigzag" stitches, as well as a straight stitch, merely by turning an exterior knob or dial (*id.* at 7a, 8a, 21a).[3]

In 1953, Vigorelli, an Italian manufacturer of sewing machines, introduced the first multi-cam machine into the United States, and a year later the importation of Japanese manufactured models commenced (*id.* at 16a). During this period, these were the only multi-cam machines available on the domestic market (*id.* at 20a).

Prior to 1955, Singer had pending patent applications on two distinct types of multi-cam machines (which it was later to market as its "319" and "401" models). It had also filed an application ("the Harris reissue") on a third type of multi-cam machine (*id.* at 9a, 24a–25a).[4] Discovering that Vigorelli had patent applications pending in several countries, in-

[3] A "zigzag" stitch can be produced on a replaceable cam machine only by manually placing in the machine a cam designed to produce the desired stitch, and such stitch can be made on a straight stitch machine only by placing an attachment thereon (App., 7a, 8a, 81a). A "zigzag" stitch can also be made on another type of machine, which is not produced by Singer, by manually manipulating, during the operation of the machine, an exterior handle or lever (*id.* at 7a, 8a, 19a).

[4] The application covering the "401" machine issued as United States Patent No. 2,862,468 on December 2, 1958; the application covering the "319" machine issued as United States Patent No. 2,810,360 on October 22, 1957; the Harris application issued as United States Patent Re. No. 24,370 on October 8, 1957 (*id.* at 9a, 14a, 15a).

cluding the United States, which could dominate the basic idea of both the Singer "319" and "401," defendant entered into a non-exclusive, world-wide, royalty-free cross-licensing agreement with Vigorelli in November 1955 (*id.* at 24a, 28a).[5]

In the course of the negotiations with Vigorelli, Singer learned that Gegauf, too, had patent applications pending on a multi-cam machine. Further investigation uncovered information which caused Singer to fear that an interference might be declared between its Harris-reissue application and the United States application of Gegauf (*id.* at 32a), and that Gegauf's applications in the United States would cover the "319" and "401" machines (*id.* at 34a). Gegauf, in turn, was seriously concerned that certain prior patents, if called to the attention of patent offices, would limit or invalidate its claims (*id.* at 35a), and Singer left Gegauf with no doubt that it would oppose the issuance of, and believed itself able to "knock out" Gegauf's patents (*ibid.*). Thereafter, on April 14, 1956, Singer and Gegauf entered into a world-wide, non-exclusive, royalty-free cross-licensing agreement relating to these and other patent applications (*id.* at 36a). This agreement (Gx. 26; see App., *infra*, pp. 36a–39a) also provided that:

> SINGER and GEGAUF realize that interference proceedings are about to be opened in the U.S.A. between the * * * Harris reissue application and one or more patent applications of Gegauf * * *. In view of the foregoing,

[5] The government did not challenge the legality of this agreement. The court, however, discussed it at length and held that it was not illegal (*id.* at 22a–32a).

SINGER and GEGAUF have entered into the following agreement.

1) SINGER and GEGAUF each undertakes not to do anything, either directly or indirectly and in any country, the result of which might restrict the scope of the claims of the other party relating to the subject matter of the above mentioned patents and patent applications.

SINGER and GEGAUF each undertakes, in accordance with the laws and regulations of the Patent Office concerned, to facilitate the allowance in any country of claims as broad as possible, as regards the subject matter of the patents and patent applications referred to above.[6]

Next, Singer, using Vigorelli as an intermediary, commenced negotiations to acquire Gegauf's United States patent applications. Its objective was to be in a position to enforce both its own and Gegauf's patents, when issued, against Japanese machines which were being sold in the United States at a "lower price" than either the European imports or Singer's own machines (App., *infra*, p. 80a; see *id.* at 19a, 21a).[7] In August 1956, Singer emphasized to

[6] The interference that subsequently developed between the Singer and Gegauf cross-licensed applications was settled outside of the patent office with Singer abandoning the interference. (App., *infra*, p. 43a).

[7] Judge Ryan found that "Japanese made machines * * * because of their lower price were in substantial competition with Singer" (*id.* at 80a) and the "principal threat to the Singer machine came from the Japanese imports not from European production" (*id.* at 74a). Thus, in 1959, of total imports into the United States of 98,505 multi-cam machines, over 57,000 were manufactured by Japanese firms (Stip., ¶¶ 130–131; Gx. 191, 194).

Gegauf the legal and practical difficulties of enforcing a United States patent against the large number of infringing imports which were coming into the United States.* In September Gegauf wrote Singer favoring the idea of doing something "against Japanese competition" in the United States, to which Singer replied that an arrangement could be reached "equally advantageous to both" (*id.* at 42a–43a). In further negotiations Singer pointed out that "their mutual interests required that something be done to protect themselves from the Japanese infringing machines", and that under the circumstances "neither was in a position alone effectively to protect its respective patent" (*id.* at 44a).

During a series of later meetings between the parties, Gegauf revealed that it was planning to file another United States application (a division of its original application), but that it wished to retain this divisional application (Gegauf II) to license it to a European company (*id.* at 45a). Singer was unwilling to acquire only the original application (Gegauf I) and insisted upon obtaining both, because it felt that either, standing alone, was "weak" (*ibid*). Gegauf ultimately acceded to Singer's urgings and expressed its willingness, on certain conditions, to make an agreement with Singer "in order to stop as far as possible Japanese competitors in the United States market" (*id* at 47a). To allay Gegauf's fears

* The court speaks of "infringing" machines. However, since at this time and during all but the last 1½ months of the negotiations, no patents had been issued on either Gegauf's or Singer's applications (see n. 4, p. 5, *supra*; n. 9, p. 9, *infra*), there could then be no infringing machines.

that the Japanese manufacturers, if stopped by Singer in the United States, would "run to Europe," Singer argued that a greater risk was run in Europe if Singer were not permitted first to stop infringements in the United States (*id.* at 49a–50a). Finally, on December 5, 1957, Gegauf assigned both of its United States patent applications and all rights to any patents that might be issued thereunder to Singer for $90,000 (*id.* at 51a).[9] Singer, in turn, agreed that it would give Gegauf a non-exclusive, royalty-free license to sell in the United States sewing machines made in Gegauf's own Swiss factory which were of the type disclosed in the assigned patent application, and that it would not itself make "a slavish copy" of the Gegauf machine (*ibid*). Singer had no intention of licensing others under these patents (*id.* at 78a; see *id.* at 68a, 80a).[10]

Soon after the patent on Gegauf I issued, Singer filed two infringement actions against the largest domestic importer of Japanese machines (Brother International Corp.) based on that patent, its patent covering the "401" machine, and its Harris reissue

[9] These applications issued as United States Patent No. 2,832,302 on April 29, 1958 (Gegauf I), and United States Patent No. 2,877,726 on March 17, 1959 (Gegauf II) (*id.* at 9a).

[10] However, Singer did grant one license under the Gegauf patents to Sears Roebuck Co., in deviation from its policy of not licensing competitors, "because Sears was a good customer of one of Singer's subsidiaries" and "Singer 'felt constrained to acquiesce to a limited extent in the request for a license'" (*id.* at 68a). In 1959 Singer received in royalties from Sears Roebuck a total of $116,895 and in 1960, $75,435 (*ibid.*)

patent (*id.* at 74a).[11] In January 1959 it instituted a proceeding before the United States Tariff Commission, under 19 U.S.C. 1337, for the purpose of excluding from the United States all imported machines coming within the claims of Gegauf I (*id.* at 68a, 70a).[12] More than 90% of the multi-cam machines imported from Japan during 1957–1959 would have been excluded by that patent (Gx. 191).

2. After reciting the above facts, the district court concluded that the defendant neither conspired with Gegauf and Vigorelli to restrain or monopolize commerce in multi-cam sewing machines, nor unilaterally attempted to monopolize such commerce (App., *infra*, p. 82a). The court found that Singer's primary purpose in executing the cross-licensing agreement of April 14, 1956, with Gegauf was to protect its opportunity to produce the "401" and "319" machines, "particularly in the United States where enforcement of the Gegauf patent might very easily have foreclosed the market to Singer" (*id.* at 40a); and that its "secondary purpose"—"the only one disclosed to Gegauf"—was "to obtain protection against the Japanese

[11] These actions are presently pending (*id.* at 74a). Singer also brought two infringement actions against other importers of Japanese multi-cam machines, which terminated in a consent judgment enjoining the defendants from selling any machine embodying the inventions covered by Singer's patents (*ibid*).

[12] This proceeding has been stayed pending the outcome of this suit (*id.* at 69a). There is authority that in such proceedings the validity of a patent is not subject to challenge, although it is the basis of the exclusion. *In re Von Clemm*, 229 F. 2d 441 (C.C.P.A.); *In re Orion Co.*, 71 F. 2d 458 (C.C.P.A.).

machines which might be made under the Gegauf patent" (*ibid.*).

The court ruled that the provisions in that agreement under which each party undertook [1] "not to do anything to restrict the scope of the claims of the other in any country relating to the subject matter of the listed patents and patent applications" and, [2] "in accordance with the laws of the particular Patent Office, [to] facilitate the allowance to the other in any country of claims 'as broad as possible' " (*id.* at 36a, 37a), were neither conspiratorial acts nor themselves unlawful. It construed the phrase "in any country", as used in [1] above, to refer only to certain European countries and not to proceedings before the United States Patent Office (*id.* at 36a),[12] but concluded that the same phrase as used in [2] above, did apply to the United States "as far as Singer was concerned" (*id.* at 37a). The court held (*ibid.*):

> In effect, all that Singer agreed to do was not to attempt to obstruct what it had no power to prevent and what in fact it knew Gegauf would eventually be awarded under the United States laws on the ground of priority. There was nothing illegal in this. We know of no rule of law which would make such abstention under

[12] This finding is apparently based on a memorandum (Dx. 31) written to Singer's files by Mr. Stanford (the head of Singer's patent department) so interpreting the written agreement, and his testimony on the subject, which was to the same effect as the memorandum (Tr. 1106–1113a). See note 20, page 24, *infra*.

> the circumstances here illegal; and this is so even if Singer could have blocked the issuance of the United States patent to Gegauf.

It further reasoned that "assuming, for the sake of discussion, that such provisions were illegal, no acts were done pursuant to this agreement and the claim of Gegauf I was concededly valid" (*id.* at 75a–76a)."

As to the acquisition of the Gegauf patents, the court noted (*id.* at 53a):

> Singer had told Gegauf, with complete frankness, that the reason Singer wanted the Gegauf patent was that Singer could enforce it better than Gegauf could. Gegauf well knew when it negotiated with Singer concerning the transfer of the patent that Singer expected upon acquisition to enforce the patent and that enforcement would most certainly include Japanese manufacturers who were the principal infringers.

It ruled, however, that the fact "that Singer had this unconcealed purpose and intent and that Gegauf knew or was advised of it does not spell out or sustain an inference that there was an unlawful conspiracy or agreement to exclude or not license one particular competitor; nor does the fact that Gegauf shared with Singer a common concern over Japanese competition"

---

[14] The government's stipulation as to the validity of Gegauf I stated that "[t]he Government for the purposes of this suit does not dispute the validity of the claims of the [Gegauf I patent], as issued" (Stip., ¶93). The same stipulation expressly provided, however, that "[n]othing shall preclude the Government from offering evidence * * * of agreements made * * * relating to cooperation in the acquiring of grants of patent claims" (*ibid.*).

(*ibid*). Singer's institution of proceedings before the Tariff Commission—"primarily" to bar importation of Japanese multi-cam machines—was found to be no evidence of a conspiracy, for while "[t]he principal threat to the Singer machine came from the Japanese imports not from European production," Singer sought, nevertheless, "to bar all infringing machines" (*id.* at 73a, 74a).

The court emphasized that Singer, Gegauf and Vigorelli had an attitude toward each other of "suspicion, wariness and self-preservation" (*id.* at 52a), and that with respect to Singer's acquisition of the Gegauf patents, "[n]either party was eager for the agreement finally made" (*id.* at 53a). It held that since "Singer was not concerned with the effect [of competition] upon Gegauf in Europe as long as it did not affect Singer products in the United States," while Gegauf, whose "prime interest was the protection of its machine in Europe * * * gave but little weight to what might happen to Singer in the United States so long as Singer's danger did not affect Gegauf in Europe" (*id.* at 52a), the alleged conspirators' dealings lacked "unity or identity of any common purpose or motive," and therefore did not amount to a conspiracy (*id.* at 52a).

Finally, the court held that Singer did not unilaterally attempt to monopolize trade in multi-cam machines, since "[t]he exclusion of competition through patent ownership is the lawful result of the monopoly which the law grants to a patent owner" (*id.* at 81a). It found that "Singer's refusal to grant licenses to competitors and its attempt to eliminate

infringers, leaving as competitors all manner of sewing machines with devices capable of doing the same thing over which Singer had no control," indicates no intent nor attempt to achieve an illegal monopoly" (*ibid.*). These acts were viewed by the court as "perfectly consistent with a lawful intent and purpose [of Singer] to protect its patents and machines" (*ibid.*).

THE QUESTIONS ARE SUBSTANTIAL

This case involves the relationship of the antitrust laws and patent laws in their application to conduct involving the pooling of patents to restrain competition and monopolize trade. Here the questions are (i) whether the dominant firm in an industry may lawfully augment the exclusionary power inherent in its own patents by acquiring patents of a competing manufacturer for the purpose of using the combined patents to eliminate their common competitors; and (ii) whether patent applicants may lawfully agree not to impede, and indeed to promote, the issuance to each of them of patents having the broadest possible scope.

The resolution of these questions by this Court is of great importance not only to the general development of the antitrust laws but also to the maintenance of competition in the domestic sewing machine market. It also directly involves the status of our international trade with foreign countries, particularly Japan.

---

[15] The "relevant market" was found to include multi-cam, replaceable cam, manual and straight stitch machines having zigzag attachments (*id.* at 81a).

The manufacture and sale of multi-cam sewing machines is a significant segment of our economy. In 1959, the last year for which figures are available, Singer's sales alone amounted to nearly $50,000,000 (App., *infra*, 21a). Singer is the sole domestic manufacturer of these machines; its only competitors are foreign manufacturers, whose combined imports accounted in 1959 for roughly 40% of the domestic market (Gx. 190–191, 194). If the decision below is allowed to stand, Singer, through the enforcement of its combined patents—primarily those acquired from Gegauf—will be able to increase its share of the domestic multi-cam market from approximately 60%, as of 1959, to more than 90% (Gx. 188–196; Stip. ¶¶ 100, 128–129).

The chief victims of the exclusionary use of these patents would be Japanese manufacturers, whose share of the American market in 1959 was about 22% (*ibid.*). Inasmuch as the sewing machine industry is one of Japan's major export industries, it is evident that the decision below will have a substantial impact upon the course of trade between the two countries.

1. It is well settled that a combination or conspiracy to foreclose a competitor from any substantial market is illegal *per se* under the Sherman Act. *Radiant Burners, Inc.* v. *Peoples Gas Light & Coke Co.*, 364 U.S. 656; *Klor's, Inc.* v. *Broadway-Hale Stores, Inc.*, 359 U.S. 207, 212; *Fashion Originators' Guild* v. *Federal Trade Commission*, 312 U.S. 457, 465–468. There can be no doubt that the arrangement between Singer and Gegauf, whereby their respective patents were combined in Singer's hands for the express purpose of excluding Japanese and other competitors from the

American market, falls within the category of proscribed concerted action. At the time of the acquisition agreement, Singer was already assured, by virtue of its royalty-free cross-licensing agreement with Gegauf, that it would be able to continue production of its own machines, and, as the court found, it had no interest in licensing the Gegauf patent to others (App., *infra*, pp. 68a, 78a, 80a). Its purpose in acquiring that patent was solely and frankly exclusionary (*id.* at 44a, 47a). Singer feared that the claims of its own patent applications were probably not broad enough to protect it against the Japanese multi-cam machines then being imported into the country (*id.* at 40a, 52a–53a), and it had no confidence that Gegauf would be willing or able to enforce its claims against the Japanese (*id.* at 42a). Recognizing, therefore, that "neither was in a position alone effectively to protect its respective patent" (*id.* at 44a), Singer sought to persuade Gegauf that their mutual interests lay in barring the Japanese from the United States market and that this purpose could best be achieved by combining the patents in Singer's hands. Gegauf, though initially skeptical, was eventually convinced by Singer that the elimination of the Japanese from the American market would make it easier for Gegauf to close the door to Japanese importation in Europe (*id.* at 49a–50a).

This exclusionary combination cannot be validated, as the court below believed, on the ground that the additional power [redacted] acquired by Singer was a lawful power which comes to an independent patent owner. This Court has declared that "[t]he lawful individual

monopolies granted by the patent statutes cannot be unitedly exercised to restrain competition," *Standard Oil Co.* v. *United States,* 283 U.S. 163, 174, and that one patent monopoly cannot be used for "the exploitation of a second patent monopoly not embraced in the first," *Ethyl Gasoline Corp.* v. *United States,* 309 U.S. 436, 459. It has repeatedly been held that collective action by patentees to fix prices, or exclude competitors violates the Sherman Act.[16] *United States* v. *Line Material Co.,* 333 U.S. 287, 311; *United States* v. *National Lead Co.,* 332 U.S. 319, 328, *Hartford-Empire Co.* v. *United States,* 323 U.S. 386, 406–407; *United States* v. *Krasnov,* 143 F. Supp. 184, 199 (E.D. Pa.), affirmed *per curiam,* 355 U.S. 5; *United States* v. *Besser Mfg. Co.,* 96 F. Supp. 304, 311 (E.D. Mich), affirmed, 343 U.S. 444. See *Standard Oil Co.* v. *United States,* 283 U.S. 163, 169, 171, 174, 176. An agreement, such as the one here, among competitors to combine their patents in a single owner for the express purpose of suppressing the competition of outside rivals more efficiently than either could do alone is no less obnoxious to the public interests protected by the Sherman Act than was the conduct outlawed in the above cases.

---

[16] The evils of combining patents in a single owner were graphically summarized by this Court in *Transparent-Wrap Mach. Corp.* v. *Stokes & Smith Co.,* 329 U.S. 637, 646–647 (footnote omitted), as follows:

> He who acquires two patents acquires a double monopoly. As patents are added to patents a whole industry may be regimented. The owner of a basic patent might thus perpetuate his control over an industry long after the basic patent expired. Competitors might be eliminated and an industrial monopoly perfected and maintained. * * *

It is basic antitrust doctrine that an agreement between two or more traders not to deal with other traders is a *per se* violation of the Sherman Act even though individual refusals to deal may be entirely legitimate. *Klor's, Inc.* v. *Broadway-Hale Stores, Inc.*, 359 U.S. 207, 212; *Fashion Originators' Guild* v. *Federal Trade Commission*, 312 U.S. 457, 465–468. The close kinship between the exclusionary combination involved here and the concerted refusal to deal is readily apparent. If Singer and Gegauf had simply agreed that neither would license any third person to manufacture its machine and that each would enforce its own patent to the hilt, that agreement would clearly fall within the statutory ban against group boycotts. As Judge Rifkind stated in *United States* v. *National Lead Co.*, 63 F. Supp. 513, 524 (S.D. N.Y.), affirmed, 332 U.S. 319, "where there is a refusal to license * * * which is the product of agreement or conspiracy, on the part of the owners of competing patents * * * the law is offended to the same extent as the law is violated when several combine and agree not to do business with a particular customer or class of customers." In this case, Singer, instead of relying upon a promise by Gegauf to refrain from licensing and to enforce its patent against Japanese and other importers, persuaded Gegauf that precisely the same objective could more effectively be accomplished by vesting in Singer the ownership of the patents. We submit that the exclusionary arrangement thus consummated should not escape the proscription of the antitrust laws merely because the means chosen for re-

straining competition involved a pooling of patents, rather than a reciprocal agreement not to deal.

This conclusion is in no way impaired, as the district court believed it was, by the fact that Singer and Gegauf viewed one another suspiciously or had different reasons for wishing to exclude Japanese and other competition from the United States market. This Court has held that the governing criteria for determining the existence of a conspiracy are whether the parties had "a unity of purpose or a common design and understanding, or a meeting of minds in an unlawful arrangement." *American Tobacco Co.* v. *United States,* 328 U.S. 781, 810. A combination or conspiracy is proved when it is shown that competitors through "concerted action" move toward a common objective (*United States* v. *Masonite Corp.,* 316 U.S. 265, 275; *American Column & Lumber Co.* v. *United States,* 257 U.S. 377, 409) or, by agreement, act with "substantial unanimity" of purpose (*United States* v. *Parke, Davis & Co.,* 362 U.S. 29, 46; *Interstate Circuit, Inc.* v. *United States,* 306 U.S. 208, 221, 226–227).

In the instant case, the facts as found by the district court (see the Statement, *supra,* pp. 7–9), conclusively establish that Singer and Gegauf entered into the acquisition agreement and the agreement of April 14, 1956, with a communicated unity of purpose "to stop as far as possible Japanese competitors in the United States market" (App., *infra,* p. 47a; see *id.* at

42a–43a, 49a–50a),[17] and thus engaged in "concerted action" toward a common objective. Under the above authorities, such concerted action constitutes a combination or conspiracy.

2. The court below further erred in refusing to find that the course of conduct pursued by Singer constituted an attempt to monopolize in violation of Section 2 of the Sherman Act. The attempt by a company to gain control of a market is no less unlawful, we submit, when carried out through the acquisition of its competitor's patents than when it is carried out by the acquisition of other assets or stock. The undisputed facts found by the district court (see the Statement, *supra,* pp. 6–10, 12, 13) compel the conclusion that Singer specifically intended not only to exclude Japanese competitors from the United States market in multi-cam machines, but also to eliminate all other competitors and monopolize that market. The court found that "Singer sought to bar all infringing machines" (App., *infra,* p. 74a), and "Singer's own words" were that "it wanted to get the very best patents 'to bar imports or United States production of mechanisms which would violate these patents' "

[17] This finding is buttressed by uncontradicted documentary evidence that Singer acquired the Gegauf patents so that they, grouped with Singer's patents, could more effectively be used to "prevent others from importing into the United States multiple-cam machines of the Singer Class 401 type" (Gx. 67). Gegauf's concept of the agreement was in clear accord. It wrote Singer in July 1958 that "you intend to proceed against the Japanese on the basis of your patents and ours" (Gx. 66).

(*id.* at 80a).[18] Thus, Singer indisputably acquired the Gegauf patent, under which it already had a royalty-free license, with the specific intent to exclude all competitors from—and thereby to monopolize—the market for multi-cam machines. And since it controlled over 60% of that market in 1959 (Gx. 190–191, 194), it clearly had the power to accomplish this end. No other conclusion can be drawn from the undisputed facts, therefore, but that the defendant unlawfully attempted to monopolize the United States market in multi-cam sewing machines. See *Lorain Journal Co.* v. *United States*, 342 U.S. 143, 154; *Swift & Co.* v. *United States*, 196 U.S. 375, 396.

Moreover, proof that the defendant intended to eliminate all competitors from the market is not requisite to a finding of illegal attempted monopolization. All that need be shown is that the "'nature' and 'character'" of the defendant's acts have "a 'monopolistic tendency'". *Klor's, Inc.* v. *Broadway-Hale Stores, Inc.*, 359 U.S. 207, 213. This requirement was clearly met in the instant case by the government's proof of Singer's intent and power to exclude Japanese manufacturers from the United States market (see *supra*, pp. 7–9), since exclusion of the Japanese—Singer's primary competitors—would result in virtually complete domination of the domestic multi-cam market by Singer.

[18] The document quoted by the court (Gx. 57) continued, "it must be remembered that getting control of the patent is the main objective, with the elimination or curtailment of European import [*sic*] as an important but secondary objective."

The district court apparently held that Singer had no specific intent to monopolize because it did not try to exclude manufacturers of every other type of sewing machine that might compete with the multi-cams (App., *infra*, p. 81a). The presence or absence of such intent, however, is not pertinent to the question whether Singer attempted to monopolize the multi-cam market. The concept of "relevant market," as applied in cases alleging monopolization, does not come into play where the charge is attempted monopolization (see *United States* v. *du Pont & Co.*, 351 U.S. 377, 395–396, n. 23). All that need be shown in the latter situation is that the defendant had a specific intent to exclude competitors from any part of commerce. By its intention to exclude, the defendant has removed from the case any issue as to the "relevant market."

3. In the agreement of April 14, 1956, Singer and Gegauf each agreed (a) not to do anything in any country, either directly or indirectly, the result of which might restrict the scope of the patent claims of the other party, and (b) to facilitate the allowance in any country of claims as broad as possible, in accordance with the laws and regulations of the patent office concerned. We submit that this agreement, in addition to being an integral part of an illegal conspiracy (see *supra*, pp. 15–20), is itself an unreasonable restraint of trade in violation of Section 1 of the Sherman Act.

Patent office proceedings are *ex parte* at almost all stages. The major exception is when an interference is declared between parties claiming rights to the same invention. The immediate purpose of such a

proceeding is, of course, to determine which applicant is entitled to a common claim, by virtue of being the first inventor. But before the issue of priority is reached, the parties to an interference are permitted by United States Patent Office rules (37 C.F.R. 1.232, 1.233) to place in issue the patentability of the interfering claims. By this means the second inventor in point of time can protect his own right to practice the invention, though receiving no patent himself, by preventing the claims of the first inventor from issuing. The adversary nature of such a contest can provide an important check on the granting of invalid patent monopolies. See *Opposition and Revocation Proceedings in Patent Cases, Study No. 4, Subcommittee on Patents, Copyrights and Trademarks,* 84th Cong., 2d Sess., p. 14; Ladd, *Business Aggression Under The Patent System,* 26 U. Chi. L. Rev. 353, 356.

Recognizing the importance of interference proceedings in "safeguard[ing] the public in the first instance against fraudulent patent monopolies," this Court has held that patents arising out of an inequitable settlement of a pending interference were unenforceable. *Precision Instrument Mfg. Co.* v. *Automotive Maintenance Mach. Co.,* 324 U.S. 806, 818. The Court stated that "[t]hose who have applications pending with the Patent Office or who are parties to Patent Office proceedings have an uncompromising duty to report to it all facts concerning possible fraud or inequitableness underlying the patents in issue" (*ibid.*), because—

> a patent is an exception to the general rule against monopolies and to the right to access

> to a free and open market. The far-reaching social and economic consequences of a patent, therefore, give the public a paramount interest in seeing that patent monopolies spring from backgrounds free from fraud or other inequitable conduct and that such monopolies are kept within their legitimate scope. * * * [324 U.S. at 816.] [19]

Accordingly, an agreement, such as the one here, which obligates patent applicants not to take any action or bring to light facts, in any pending or future interference proceeding, that could cause the interfering claims to be narrowed or held unpatentable, clearly breaches the applicants' "uncompromising duty" (324 U.S. at 818) to aid the patent office in keeping patent "monopolies * * * within their legitimate scope" (p. 816).[20] This breach of duty is aggravated here (as in

---

[19] See also, cases holding that a patent licensee cannot be estopped by law or contract from questioning the validity of a patent on the ground, *inter alia*, that it is being used in a manner violative of the antitrust laws, because of "the necessity of protecting our competitive economy by keeping open the way for interested persons to challenge the validity of patents which might be shown to be invalid." *Edward Katzinger Co.* v. *Chicago Metallic Mfg. Co.*, 329 U.S. 394, 400; *id.* at 399; *Scott Paper Co.* v. *Marcalus Mfg. Co.*, 326 U.S. 249, 257; *Sola Electric Co.* v. *Jefferson Electric Co.*, 317 U.S. 173.

[20] The district court held that the first sentence of the agreement here involved only applied to proceedings before patent offices in certain "foreign countries" and thus could not violate the Sherman Act (App., *infra*, p. 36a). We submit that this finding is clearly erroneous. It conflicts with the plain words of the agreement and with documents written by employees of Singer interpreting the agreement; it is only supported by a self-serving memorandum written to Singer's files by the head of its patent department and the testimony of the same official (see the Statement, *supra*, n. 13, p. 11).

Precision Instrument Mfg. Co., supra, at 816–818) by the fact that at the time the agreement was entered into Singer had, or claimed it had, information that cast doubt on the patentability of the inventions claimed in Gegauf's applications (see the Statement, *supra,* p. 6).

Besides being contrary to the patent laws, agreements between competing manufacturers to preclude a contest in pending and future proceedings before the Patent Office are violations of Section 1 of the Sherman Act. Such agreements have no legitimate economic justification. Their inevitable effect is to shield patent applications from exposure to an adversary proceeding in the Patent Office, and thus to foster the proliferation of monopolies which the patent laws were never intended to confer. Hence, they are forbidden by Section 1 of the Sherman Act.[21] As the district court observed in *United States* v. *Standard Oil Co.,* 33 F. 2d 617, 630 (N.D. Ill.), reversed on other grounds, 283 U.S. 163, agreements between competitors admitting the validity of pooled patents "violate the letter and the spirit of the patent law, and are contrary to public policy" and contravene the proscriptions of the Sherman Act.[22] In that case,

[21] Cf. *Timken Roller Bearing Co.* v. *United States,* 341 U.S. 593, 599; *United States* v. *Socony-Vacuum Oil Co.,* 310 U.S. 150, 224–226, n. 59; *United States* v. *Trenton Potteries Co.,* 273 U.S. 392, 396–398.

[22] Those agreements were cancelled by the parties before the case reached this Court; therefore, it did not pass upon their validity. 283 U.S. at 181–182.

as here, the agreements "[tied] the hands and seal[ed] the lips of the only parties who would ordinarily stand suit and contest the validity of the patents," thus "fasten[ing] on the public burdens which it was not the purpose of the patent law to impose" (*ibid.*).

CONCLUSION

The questions presented by this appeal are substantial and of public importance. Probable jurisdiction should therefore be noted.

Respectfully submitted.

ARCHIBALD COX,
Solicitor General.
LEE LOEVINGER,
Assistant Attorney General.
ROBERT B. HUMMEL,
GEORGE R. KUCIK,
LES J. WEINSTEIN,
Attorneys.

SEPTEMBER 1962.

APPENDIX

UNITED STATES DISTRICT COURT

SOUTHERN DISTRICT OF NEW YORK

Civ. 154–108

UNITED STATES OF AMERICA, PLAINTIFF

v.

THE SINGER MANUFACTURING COMPANY, DEFENDANT

AMENDED AND CORRECTED OPINION OF SYLVESTER J. RYAN, *C.J.*

RYAN, *C.J.*:

This civil antitrust suit was filed by the United States of America under Section 4 of the Sherman Act to prevent and restrain alleged violations by the defendant of Sections 1 and 2 of the Act. The suit concerns only the United States trade and commerce arising from the importation into the United States of a particular type of household sewing machine known as the "machine-carried multi cam zigzag machine." Many of the relevant and material facts were stipulated by the parties prior to trial following extensive informal hearings held with counsel. The very competent senior attorneys and the junior associates appearing both for the Government and for the defendant gave evidence of their great ability, conscientious application and industry, and zealous advo-

cacy. They were most cooperative and helpful; for this, they have the thanks of the Court.

I. THE ISSUES PRESENTED

The complaint alleges that, beginning in at least 1956 and continuing up to December 22, 1959, the date of the filing of the complaint, the defendant and the alleged co-conspirators had been engaged in an unlawful combination and conspiracy to restrain and monopolize; and that the defendant had unlawfully attempted to monopolize interstate and foreign trade and commerce in the importation, sale and distribution of household automatic zigzag sewing machines.

The acts alleged to have been committed by the defendant pursuant to the alleged conspiracy and attempt are: (1) the acquisition by the defendant from the alleged co-conspirator Gegauf of two United States patent applications covering automatic zigzag sewing machines; (2) the making of separate agreements with the alleged co-conspirators Gegauf and Vigorelli to insure the granting, with respect to specified patents, of the broadest possible patent claims to each other for the purpose of excluding foreign automatic zigzag sewing machines; (3) the filing of infringement suits and proceedings before the Tariff Commission by the defendant asserting the patent rights assigned to it by Gegauf in conjunction with its own patent rights to exclude the importation into the United States of automatic zigzag sewing machines of foreign manufacture; (4) the action by defendant, in conjunction with the alleged co-conspirators, determining what European manufacturers would be permitted to export foreign made automatic zigzag sewing machines to the United States; and (5) the making by the defendant of a non-aggression cross-licensing agreement with Messerschmitt and the subsequent acquisition

by the defendant of the United States Messerschmitt patent application, which was the subject of the cross-license agreement, for the purpose of excluding foreign made automatic zigzag sewing machines.

The Government does not charge that the acquisition by Singer of three other United States patents—the Harris reissue, Johnson, and Perla, which are later discussed—was unlawful. On the contrary, it concedes that they were lawfully acquired. It is the acquisition of these two Gegauf United States patents, known as Gegauf No. 1 and No. 2, which is claimed by the Government to be unlawful. It is contended that they were acquired by Singer pursuant to the alleged conspiracy and with a purpose to use them in conjunction with the above three lawfully acquired patents to exclude competition. The Government also contends that the Singer "401" machine was fully protected under a Gegauf license and the Johnson patent.

From these acts, it is alleged, have flowed the following results: (1) United States importers, distributors and retailers, dealing in household automatic zigzag sewing machines of foreign manufacture, have been precluded from importing, distributing and selling these machines in a market free from unlawful restraints; (2) defendant has been able to acquire and maintain a position of domination and control in the manufacture, sale and distribution of household automatic zigzag sewing machines in the United States; and (3) consumers have been deprived of the opportunity of purchasing household automatic zigzag sewing machines in a free and competitive market. To dissipate these effects, the Government prays that the defendant be enjoined from continuing to carry out the alleged conspiracy and attempt to monopolize and from using its patents and patent rights to effectuate the alleged conspiracy.

The main thrust of the defense lies in the contention that all the complained-of activities of Singer were lawful and were done to accomplish a lawful purpose. Defendant maintains that they were initiated and carried out solely to insure Singer's ability to lawfully protect the manufacture and sale of its "401" sewing machine in the United States and of its "319" sewing machine outside the United States.

The specific issues presented are: (1) Was there an unlawful conspiracy among the alleged conspirators to restrain or exclude competition in the trade and commerce involved?; (2) Did Singer attempt to monopolize this trade and commerce?; and (3) Were the agreements entered into between the parties or any of their provisions *per se* violations of Sections 1 or 2 of the Sherman Act?

The Government did not call any witnesses on its case in chief; it called four witnesses on rebuttal; it offered in evidence 210 exhibits, documentary and physical, during the trial. Defendant called ten witnesses on its case in chief and two in rebuttal; it offered 202 documentary and physical exhibits. After consideration of all this evidence we make the following findings of fact.

II. FINDINGS OF FACT

A. DESCRIPTION OF DEFENDANT AND OF OTHERS

The sole defendant named is The Singer Manufacturing Company (hereinafter Singer), a New Jersey corporation with its principal place of business in this district. Singer manufactures household sewing machines, including machine-carried multi cam zigzag sewing machines, which are particularly involved in this suit. It sells these machines in the United States through a wholly-owned subsidiary, the

Singer Sewing Machine Company, and in various foreign countries through independent distributors.

The alleged co-conspirators named in the complaint are:

Fritz Gegauf, A.G., Bernina Nahmaschinen Fabrik (hereinafter Gegauf), a Swiss corporation with its principal place of business in Steckborn, Switzerland. Gegauf manufactures household sewing machines in Switzerland, including automatic zigzag sewing machines, and exports some of these machines to various countries including the United States.

Arnaldo Vigorelli, S.p.A. (hereinafter Vigorelli) is an Italian corporation, with its principal place of business in Pavia, Italy. Vigorelli manufactures household sewing machines in Italy, including automatic zigzig sewing machines, and exports some of these machines to various countries, including the United States.

Although not named as an alleged co-conspirator, there was some evidence presented concerning Messerschmitt, A.G. with whom Singer at times had patent negotiations and dealings. Messerschmitt is a German corporation, engaged in the manufacture and sale of household sewing machines, including zigzag sewing machines.

B. A BRIEF DESCRIPTION OF HOUSEHOLD ZIGZAG SEWING MACHINES AND THEIR OPERATION

Some sewing machines are designed and sold for use principally by housewives for personal and family sewing needs; other machines are produced to meet the requirements of industrial and commercial use. The straight stitch type of household sewing machine comprises three basic devices, namely, a thread-carrying needle which reciprocates in a vertical direction but does not move transverse to the direction of the work

feed; a looptaker which, cooperating with the needle, forms a straight line of stitches; and a mechanism which feeds the work to be stitched between such needle and looptaker. These three devices are driven in synchronism by an electric motor or by an operator using a treadle, handcrank, or similar mechanism. The speed of the machine, the length of the stitches and the direction of the feed may be varied by the operator.

The zigzag stitch machine has all of the features and functions of a straight stitch machine and may be operated as a straight stitch machine. In addition, the needle may be shifted back and forth laterally of the normal direction of the work feed, from zero to maximum, within the field of lateral throw of the needle, from a fixed neutral position of nonvibration in the center of such field of throw, so as to produce stitches that follow a zigzag path. The size and shape of the pattern of the zigzag stitch may be altered by varying the amplitude of the lateral needle movements and the amplitude and/or direction of the work-feeding movements. Mechanism may be provided for fixing a neutral position of nonvibration of the needle at either the center or at either side of the field of the lateral throw of the needle and for controlling the lateral throw of the needle within such field, from zero to maximum, either across a center line through such field or from either side of such field. Mechanism may also be provided, whereby the needle can be laterally vibrated through predetermined patterns of movement modifying the zigzag stitch path, with the result that stitches may be made having various ornamental configurations other than plain zigzag.

There are three general types of household zigzag sewing machines:

1. The manually-operated zigzag machine—a household sewing machine which, in addition to straight stitches, produces continuous plain zigzag stitches and, by manual manipulation, during the operation of the machine, of a handle or lever located on the exterior of the machine, will also produce various ornamental and functioning zigzag stitch patterns.

2. The Replaceable Cam ZigZag Machine—a household sewing machine which, in addition to straight stitches, produces without any artistry on the part of the operator, various ornamental and functional zigzag stitch patterns, the preselection of which must be made by the user through the manual removal from the machine of one or more cams and the manual replacement of such cam or cams by one or more substitute cams having cam configurations different from the replaced cams.

3. The Machine-Carried Multiple Cam Zigzag Machine—a household sewing machine which, in addition to straight stitches, produces without any artistry on the part of the operator, various ornamental and functional zigzag stitch patterns, the preselection of which must be made by the user through a device such as a dial, handle or knob, located on the exterior of the machine, which affects a relative shifting of cam tracking means and a group of machine-carried cams, each having cam configuration different from the other cams.

To properly and efficiently operate any household sewing machine, including a zigzag stitch machine, the machine must first be equipped with needle and bobbin threads. Three adjustments must be made to insure that the machine will sew with the requisite thread tension, stitch length and work pressure. During the operation of the machine, the operator must synchronize the speed of the machine to the feed of the material sewn to insure that the stitches

will be formed in the desired area of the work material.

With each of the three general types of household zigzag sewing machines the operator must in addition make a preselection through a control device determining the width of the zigzag stitch to be produced. With a manually operated machine the zigzag stitch pattern may be varied by the manual manipulation of the stitch width control during machine operation, the results obtained varying with the artistry and skill of the operator. With the replaceable cam and machine-carried multiple cam machines the zigzag stitch pattern is predetermined by the configuration of the particular cam used, which cam in each instance is selected by the operator, by, in the case of the replaceable cam machine, the manual replacement of one cam with another cam and, in the case of machine-carried multiple cam machine, by the manual use of a dial, handle or knob to select one of a plurality of machine-carried cams.

Multicam, replaceable cam and manually operated zigzag sewing machines are not necessarily of corresponding quality, either as compared with zigzag sewing machines of the same type or as compared with zigzag sewing machines of a different type. A relatively high priced manually operated machine may be of superior quality to a relatively low priced multicam machine, a relatively low priced replaceable cam machine, or a relatively low priced manually operated machine. The price of the machine, regardless of type, in part depends upon the attachments or appurtenances which may or may not be part of such machine, and other factors. Thus, the price may be influenced, as with other commercial products by the reputation of the manufacturer, the availability of service and parts, the available financ-

ing arrangements, the instructions as to the use of the sewing machine, type and extent of guarantee, cost of manufacture and distribution, the location and type of shop at which the machine is sold, and the promotion and advertising expenditures.

C. DESCRIPTION OF THE PATENTS

There are five United States patents and one United States patent application which the Government contends are relevant to the wrongful acts charged. Each of these patents and the one patent application is owned by Singer; each discloses a machine carried multicam sewing mechanism. They are as follows:

1. GEGAUF PATENT No. 2,832,302—application filed May 29, 1953 and patent issued April 29, 1958 (called in this suit Gegauf I).

2. HARRIS REISSUE PATENT No. RE. 24,370—original Harris Patent No. 2,693,778 issued to Carl Harris on November 9, 1954. Harris Reissue Patent application filed June 16, 1955 and reissue patent issued October 8, 1957.

3. JOHNSON PATENT No. 2,862,468—application filed November 29, 1954 and patent issued December 2, 1958.

4. PERLA PATENT No. 2,810,360—application filed December 8, 1954 and patent issued October 22, 1957.

5. GEGAUF PATENT No. 2,877,726—divisional application filed December 2, 1957 and patent issued March 17, 1959 (called in this suit Gegauf II).

6. MESSERSCHMITT APPLICATION No. 548,481—application filed November 22, 1955.

1. Gegauf No. I—Patent No. 2,832,302

This patent claims the concept, *inter alia*, of a mechanism comprising a series of rotary cams having a common axis and a single retractable cam follower, shiftable relative to each other lengthwise of the common cam axis, in order to select a particular cam, but only one cam at a time, for controlling the lateral needle movement. Such a mechanism can produce only as many different zigzag stitch patterns as it has cams, i.e., one for each cam. The Government stipulated that the Singer 401 machine is covered by this patent.

2. Harris Reissue Patent No. Re. 24,370

Reissue Claims 1 through 4 allowed in the Harris Reissue Patent were also allowed in the original Harris Patent No. 2,693,778; these claims do not relate to a multicam mechanism. Eight proposed reissue claims were rejected by the Patent Office. This resulted in a series of amendments, substitutions and rejections of claims until, on May 16, 1956, Singer substituted Claim 22, a limited version of the original Application Claims 5, 7 and 8 taken in combination. On August 22, 1956, this substituted Claim 22 was placed in interference with the United States Gegauf patent application Serial No. 358,377, but subsequently it was allowed by the Patent Office as Claim 1 in Gegauf patent (Gegauf I) No. 2,832,302, issued April 29, 1958. All other substituted claims placed in the reissue application were rejected except Claims 23, 24 and 25; these three substituted claims were allowed in Harris Reissue Patent No. Re. 24,370 as Reissue Claims 5, 6 and 7.

Harris reissue allowed Claim 5 includes the limitation, *inter alia*, of a series of rotatable cams having

a common axis with each cam being shiftable lengthwise of the common cam axis with respect to the cam follower in order to select a particular cam. Harris reissue allowed Claim 6 includes the limitation, *inter alia,* of a series of rotatable cams having a common axis and a cam follower shiftable relative to each other, lengthwise of the common cam axis, in order to select a particular cam, used in combination with a constantly rotatable cam. Harris reissue allowed Claim 7 includes the limitation, *inter alia,* of a series of rotatable cams having a common axis and a cam follower shiftable relative to each other lengthwise of the common cam axis, in order to select a particular cam used in combination with a particular type of cam follower retracting means.

The parties have stipulated that Harris Reissue Patent No. Re. 24,370 discloses a machine which is covered by Claim 1 of Gegauf Patent No. 2,832,302 (Gegauf I).

3. Johnson Patent No. 2,862,468

This patent claims a concept, *inter alia,* of a mechanism comprising a stack of rotary cams and two cam followers, either of which can track any one cam or in combination can track any two cams simultaneously whereby information from such cam or cams can be utilized to control the lateral movements of the needle. Thus, as the Johnson mechanism has the ability to take information from two cams and combine that information to develop a stitch, it can produce a number of zigzag stitch patterns which far exceeds the number of cams.

4. Perla Patent No. 2,810,360

This patent claims the concept, *inter alia,* of a mechanism comprising a series of rotary cams with each

cam being provided with its own cam follower constrained to engage its associated cam only and with each cam follower being provided with its own individual handle so that each follower can be manually thrown in and out of operative engagement with its associated cam. The cam followers may be used singly to track one cam or in combination to track and combine intelligence from any two cams whereby the information from such cam or cams is utilized to control the lateral movement of the needle.

5. The Gegauf No. 2—Patent No. 2,877,726

The Gegauf No. 2 patent claims the concept, *inter alia,* of a mechanism comprising a series of rotary cams with each cam being provided with its own cam follower constrained to engage its associated cam only, whereby any cam, but only one cam at a time, may be individually selected for controlling the lateral needle movement. Thus, the Gegauf II mechanism can transmit information from any one cam at a time but cannot combine intelligence from two or more cams.

6. Messerschmidt Application No. 548,481

The Messerschmidt application claimed, *inter alia,* the concepts of (a) a series of rotary cams with each cam being provided with its own cam follower constrained to engage its associated cam only, whereby any such cam may be individually selected for controlling the lateral needle mechanism and with each cam follower provided with its own individual handle, so that each follower can be manually thrown into and out of operative engagement with its associated cam; and (b) a series of rotary cams with each cam being provided with its own follower to control the work feed by a

selected cam. The concept set forth in (a) is the same concept claimed in the Singer United States PERLA patent.

D. INTRODUCTION OF ZIGZAG SEWING MACHINES INTO UNITED STATES AND THE DEVELOPMENT OF SINGER'S 306, 319 AND 401 MACHINES

Users of industrial sewing machines, both in the United States and abroad, employed zigzag sewing machines prior to 1900. The known art at that time is illustrated by Leilich United States Patent No. 386,252, issued July 17, 1888, which disclosed an ornamental zigzag stitch sewing machine. This machine had two replaceable cams—one imparted lateral zigzag movement to the needle; the other controlled the amplitude of the work-feeding movement; these cams could be replaced by other cams giving the operator a choice of ornamental stitches.

The first Singer zigzag stitch sewing machine manufactured especially for use in the home was the model "206" machine; importation and sale of this machine in the United States commenced in 1951. The "206" machine was manufactured by Singer in its German plant under its Tiesler patent from approximately 1934 to the opening of World War II; later, commencing in 1949, similar machines were manufactured in the Singer factory in Scotland.

The "206" was of the manually operated zigzag type with built-in rotating cam; it did not have the replaceable cam of the earlier Leilich. In the "206", by manual manipulation during the stitching cycle the throw of the cam could be modified and the amplitude of the zigzag stitch varied.

In 1948 shipments of an Italian-made "Necchi" zigzag stitch machine (manually operated) first came to the United States. The sales of these "Necchi"

machines commercially demonstrated by 1951 that a definite market in a household type zigzag sewing machine existed in the United States. The "Elna" zigzag machine (replac able cam) was introduced in the United States in 1952. This machine, as the Leilich machine, had two rotary cams and two cam followers. The two cams of the "Elna" machine were replaceable by other cams so that a number of stitch patterns could be produced.

Ralph E. Johnson, a member of Singer's Experimental Department in the Elizabethport, New Jersey plant, commenced work on the development of a household zigzag machine and completed a design of a new machine on April 29, 1953. This design is embodied in the Singer Class 401 machine. The Class 401 machine (machine carried multiple cam) incorporates a stack of rotary cams and a pair of cam followers, movable lengthwise of the axis of the cam stack, either of which can track any one cam or in combination can track any two cams, whereby information from such cam or cams can be utilized to control the lateral movements of the needle. The Class 401 machine is disclosed in the Johnson U.S. Patent No. 2,862,468 (*supra*). The design of the Class 401 machine required the manufacture of a new sewing machine. It took Singer four years to develop and to produce the necessary manufacturing and assembly tools so as to permit manufacture of the machine in an efficient and economical manner. The Class 401 machine was placed on the market in June 1957.

On March 9, 1953 Martin R. Perla and Edward Koenig, members of Singer's Experimental Department in Bridgeport, Connecticut plant, were directed to design and develop an improved Class 206 machine, which was to incorporate a replaceable cam. The

design of this machine was completed by March 25, 1953 and is embodied in the Singer Class 306 machine (replaceable cam). This design eliminated the cam of the Class 206 machine and superimposed on such machine a zigzag mechanism having a rotary removable cam, otherwise leaving the Class 206 machine substantially in its then existing form. Manufacture and sale of this Class 306 machine was started in the United States and abroad in 1954 and a substantial number of said machines were sold in the United States until 1956 when manufacture, but not sale, of it in the United States was stopped and manufacture of a new Class 319 machine was commenced both abroad and in the United States. The Class 306 machine continues to be manufactured and sold abroad.

On April 1, 1954, Martin R. Perla was also directed to design and develop an improved Class 306 machine, which incorporated a multiple cam arrangement in lieu of the replaceable cam of the Class 306 machine. This design was incorporated in the Singer Class 319 machine. The Class 319 machine (machine-carried multiple cam) incorporates a built in stack of cams, each with its own follower. The cam followers may be used singly or in combination to track one or more selected cams, and to combine intelligence from two or more cams, whereby the information from such cam or cams is utilized to control the lateral movements of the needle. The Class 319 machine is disclosed in the Perla Patent No. 2,810,360 (*supra*). The production of this machine was commenced on November 18, 1955 and it was put on sale in 1956, both in the United States and abroad. Manufacture of the Class 319 machine was discontinued in the United States in 1957 when it was superseded by the Class 401 machine. The Class 319 machine continues to be manufactured and sold abroad.

In September 1953, the Italian firm of Vigorelli introduced in the United States a multi-cam zigzag stitch sewing machine. The Vigorelli machine incorporated a unitary stack of removable rotary cams, a single cam follower, movable lengthwise of the axis of the cam stack, for tracking any one of such cams, and means for transmitting the motion of the follower to the needle. This involved two ideas. The first idea comprised the concept of utilizing, in combination, a replaceable cam, a cam follower and a means to transmit the motion of the cam follower to the needle bar for the purpose of controlling the lateral needle vibration, in accordance with the shape of the cam, which motion transmitting means included a manually operable mechanism for adjusting and varying the amplitude of such lateral needle vibrations and for determining the neutral position of non-vibration of the needle. This idea was incorporated in the Singer 306 design. The second comprised the concept of utilizing, in combination, a plurality of cams, cam following means and means to transmit the motion of the cam following means to the needle bar for the purpose of controlling the lateral needle vibration in accordance with the shape of any cam, which motion transmitting means included a manually operable mechanism for engaging the cam following means with any one of the cams. This idea was incorporated in the Singer 319 and 401 designs.

The first Japanese-made multi-cam zigzag stitch machine was introduced in the United States in September 1954 by Brother International Corporation. This machine, as the Singer 401 and the Vigorelli machine, incorporated a plurality of rotary cams and a single cam follower which could be engaged with any one of the cams for laterally vibrating the needle through a predetermined pattern of movement.

In April 1955, Singer first learned that Vigorelli had introduced into the United States a modified form of its multi-cam machine. This modified form differed from the first machine in that in the modified form the single came follower was adopted not only to engage any one of the cams but in addition to engage any two adjacently disposed cams, which provided an additional variety of ornamental stitches. This idea of taking information from two cams at the same time was embodied in the Singer "401" and "319" machines.

B. THE SEWING MACHINE INDUSTRY IN THE UNITED STATES AND SINGER'S POSITION IN IT

Directly after World War II household straight stitch sewing machines were manufactured in the United States by White Sewing Machine Corporation, Free Sewing Machine Company, Inc., The Bell Manufacturing Corporation, Burtman Electric Company, Gelman Manufacturing Company, Inc., and The New Process Gear Company, as well as defendant Singer. By 1959, with the exception of The New Process Gear Company, which manufactures only straight stitch sewing machines on specifications and orders from a single domestic customer, defendant Singer was and now is the sole manufacturer of all household sewing machines made in the United States.

During the period 1948 to 1959, importations of household sewing machines, including zigzag machines, from Japan grew from 3,000 machines to 1,100,000 machines; and importations from Europe from 2,500 to 100,000. The only sale and distribution in the United States of sewing machines, including zigzag machines, other than those of defendant and New Process Gear Company, are of machines imported into the United States.

White Sewing Machine Corporation discontinued its manufacturing operations in the United States in 1957. According to the White annual report published for the year 1957: Both White and Sears Roebuck & Company had been fighting a side by side but losing battle, over the preceding five or six years, in trying to sell White's lines of sewing machines made in the United States in competition with foreign-built imports. When Sears discontinued selling the White machines and started importing machines for distribution by Sears, it was obvious that White had no chance of supporting its sewing machine manufacturing facilities. Confronted with this situation, the White management decided to have its lines of sewing machines produced for it in Japan and Germany, and to dispose of its principal sewing machine manufacturing facilities.

Most of the sewing machines, including zigzag sewing machines, imported from Europe are complete machines, consisting of head (mechanism of machine), motor, wiring, lights, equipment and appurtenances. Those imported from Japan prior to 1959 consisted only of the "head"—that is, the mechanism of the machine. In 1959, Brother and in 1960 Transworld Industries, two of the largest Japanese importers, began importing heads to which there had been added in Japan the motor, lights and wiring. To the head there is added in the United States, by importers or distributors, carrying cases, cabinets, equipment and appurtenances and, where not already so equipped, motor, wiring and lights. Indeed, some of the various items may also be imported into this country. The assembled units are distributed principally through (1) department stores and mail-order houses, which order directly from distributors or factories in Japan or from distributors in the United States, and (2)

wholesale distributors who import the machines directly or purchase them from importers and sell them to retail dealers. Some of these wholesale distributors, including Brother and New Home, two of the largest distributors, are subsidiaries of the two largest Japanese manufacturers and the sole distributors for particular Japanese manufacturers.

Most of the retail dealers of imported Japanese and European zigzag machines throughout the United States determine and fix their own list prices for machines handled by them and the actual prices at which they sell such machines, with the result that the same machine may have different list prices and may be sold at different prices in different shops. The price at which such a machine may be sold is generally determined by bargaining at the dealer's shop, and may be sold at the list price or for an amount off the list price. Dealers' list prices for a particular European-made zigzag sewing machine do not differ as much as dealers' list prices for a particular Japanese-made zigzag sewing machine. Generally, a customer can bargain a greater amount off list price for Japanese-made machines than can be bargained off list prices for European-made machines. List price includes those prices that a retailer might quote to a customer for the purpose of presenting some price and the actual selling price may be substantially reduced.

The defendant Singer presently manufactures household straight stitch, replaceable cam and machine-carried multiple-cam zigzag stitch sewing machines in the States of New Jersey and South Carolina. Singer distributes them in the various states of the United States through its wholly-owned subsidiary, Singer Sewing Machine Company, which operates about 1600 retail stores throughout the United States. The principal portion of the Singer sales in

the United States are through these retail stores. In addition, leased outlets are operated by Singer Sewing Machine Company in approximately 80 department stores located in various states. It also sells at wholesale to approximately 270 independent retail stores, which market all three types of zigzag machines. Singer also sells household sewing machines, including all three types of zigzag machines, in various foreign countries of the world through its own and independent distributors, who operate thousands of retail stores in such countries. Singer owns and operates plants manufacturing various types of machines in 14 foreign countries.

Singer also offers financing for the purchases of its machines; provides servicing of the machines; and conducts sewing classes in their use. We noted also that Singer cuts its own logs for use in making its cabinets.

In the years 1956, 1957, 1958 and 1959, Singer sold in the United States the number of units of the Singer 306 and 403 replaceable cam zigzag machines and of the Singer 319 and 401 multiple cam machines below set forth:

	Model No.	1956	1957	1958	1959
Foreign mfg.	306	48,014	19,308	9,927	13,308
U.S. mfg.	403	(1)	(1)	(1)	50,269
	319	56,965	31,838	4,199	1,028
	401	.....	74,808	147,446	155,422

[1] Not in existence.

We have observed (*supra*) that the manufacture by Singer in the United States of the Singer 319 machine was commenced, and of the 306 machine was stopped, in 1956. Of the Class 306 machines above set forth the following number thereof had been manufactured in the Singer Clydebank, Scotland plant

(where they continue to be manufactured): 1956, 20,707; 1957, 17,708; 1958, 9,927 (all); 1959, 13,308 (all). All other machines above set forth, except 138 of the Class 319 machines, had been manufactured in the United States. In the years 1958 and 1959 Singer's dollar volume of sales of the 401 machine amounted to $44,233,800 and $46,626,600 respectively, approximately 45% of its total gross dollar sales of all models of household sewing machines in the United States for each year.

Singer's Class 401 multi-cam zigzag sewing machine, with carrying case, sells at retail in the United States at $340. Singer's Class 306 and 403 replaceable cam zigzag sewing machines, with carrying cases, sell at retail in the United States at $202 and $280, respectively. Singer's Class 206 manual zigzag sewing machine, with carrying case, sale of which terminated in 1958, sold at retail in the United States in 1958 at $202.

With the Singer machines, there is no bargaining about price in an outright sale. The Singer 401 was introduced to the market in 1957 over 1½ years before the 403; it was supported with a vigorous and expensive advertising campaign: Singer spent in advertising the 401 machine approximately $2,145,000.00 in 1957; $1,270,000.00 in 1958; $1,340,000.00 in 1959; and $1,399,000.00 in 1960. It was vigorously pushed by salesmen, being the top-of-the-line or most expensive sewing machine, and the salesman's commission was computed on the basis of the sale price of the sewing machine. The Singer 403 machine was put on the market in April 1959 and Singer spent in advertising this sewing machine approximately $545,000.00 in 1959 and $120,000.00 in 1960. The Singer 404 machine was put on the market in January 1959 and Singer spent in advertising this sewing machine

approximately $585,000.00 in 1959 and $130,000.00 in 1960. Notwithstanding the greater effort and expense in promoting and advertising the Singer 401 and its earlier appearance on the market, the sales of both the 403 and 404 machines have had substantial increases, whereas the sales of the 401 have shown little change. In its advertising, Singer presented its 401, 403 and 404 machines as being a group of three sister sewing machines, all of which would perform substantially the same function.

It is against this background that we turn to examine the various agreements which, according to the Government, evidence the conspiracy to exclude competition in automatic zigzag sewing machines of foreign origin, in particular, of Japanese origin.

F. THE ALLEGED CONSPIRACY TO RESTRAIN AND MONOPOLIZE TRADE

1. The Agreements Challenged

a. Singer Vigorelli cross license agreement

During the period of the development of the Class 306, 319 and 401 machines, respectively, Singer commenced investigations to determine if Singer were free, from a patent standpoint, to manufacture and market these machines in the various countries of the world. This investigation to insure patent validity and freedom of infringement was continued from time to time during the tooling period of these three machines.

In the course of its investigation, Singer in September 1953 came across the Vigorelli multicam zigzag sewing machine (Model-Zigzag 'A') and sought from its experts an analysis of the machine and advice on the claims it encompassed and employed. Its patent counsel advised Singer that, although it felt as a case of "last resort", it could "cast doubt" on the validity

of any claims Vigorelli might obtain, it could not say with certainty that it could overcome them. These claims, as we have seen, encompassed a "rotary pattern cam mechanism" with a removable nest of cams out of which a single cam could be selected and manually controlled, which was basically a modified form of the mechanism employed by Singer in its "306" machine disclosed in Singer's expired United States Tiesler Patent (ideas also incorporated in Singer's "319" and "401"). Vigorelli had not obtained a patent in the United States for its machine. Although Singer felt that the manually controllable means infringed two Singer-owned foreign patents, it was quite sure that the rotary pattern mechanism of Singer's "306" infringed that of the Vigorelli Zigzag A. That mechanism had been completely disclosed in an instruction book put out by Vigorelli as early as August 1953; although Singer had found no Vigorelli patents claiming the rotary cam mechanism, it had little doubt that Vigorelli had applied for such a patent in Italy and possibly in the United States. While this possibility was considered by Singer as "the usual business risk", Singer was far from certain that it could overcome Vigorelli's claim but thought that it might be in a position to properly question its validity and, if required, to obtain a reasonable agreement. Singer had spent considerable time and money on its machines; the "306" and the "401" were in the process of being developed; nothing could be definitely determined regarding the Vigorelli machine while the patent applications, if any, were not open to inspection. Singer decided to take the risk of marketing its "306" machine while continuing its search for information as to the Vigorelli machine.

In 1954, the first Japanese-made multicam machine was introduced by Brother International Corp. It

incorporated the mechanism of the Vigorelli Zigzag A and the "401" machines.

In April 1955, Singer first learned that Vigorelli had introduced a modified form machine which differed from the earlier Zigzag A in that the rotary cam mechanism through a cam follower could now select a pair of cams instead of just one. Singer also learned that the claims of both the Vigorelli Zigzag A and the modified form machines had been revealed in two unexpired Vigorelli Italian-issued patents, No. 497,557 (filed January 28, 1953) covering the first multicam machine and No. 507,862 (filed September 29, 1953) covering the modified multicam machine. However, the modified machine still retained the manually controllable means which infringed Singer's foreign patents.

More important, however, was the fact that Singer was of the opinion that the Vigorelli modified machine also infringed the Singer "401" machine covered by the Singer owned Johnson patent which had been filed on November 29, 1954. Although this filing date was after the filing of the Vigorelli Italian patents, the Singer "401" machine had been developed prior to the filing date of the second Vigorelli Italian patent. It was on this basis that Singer felt its patent application was dominant to that of Vigorelli's. This confidence on Singer's part was not to last long, however, for further examination of the earlier Vigorelli Italian patent led Singer to conclude that, if Vigorelli succeeded in obtaining a patent on the stack of cams with a single follower, it could dominate the basic idea of both the Singer "319" and "401" in foreign countries, and that it was more than likely that someone other than Vigorelli might dominate in the United States. In order to secure as much protection as possible, Singer then purchased the

Harris patent No. 2,693,778 filed in the United States on June 9, 1952 and issued to Carl Harris November 9, 1954. Although this did not claim a multicam mechanism and therefore did not dominate any of the Singer zigzag machines, it did disclose, prior to any known use or known patent priority date, a plurality of rotary cams and a single cam follower, for selecting and relating the needle to a particular cam.

Having acquired the Harris patent, Singer could endeavor to secure a claim broad enough to protect its "319" and "401" machines by obtaining a reissue of the Harris patent which would combine the Harris claim (which was disclosed but not claimed in the patent as issued) with those incorporated in the "401", "319", and the Vigorelli and Brother machines; by filing for a reissue, it could precipitate a patent interference proceeding between a Harris reissue application and any other pending application. A possible result of this course might be that the claims involved in the interference would be awarded to the Harris patent by reason of its prior filing date. Another possible result might be that the Patent Office would reject the claims as too broad. It was the view of Singer that such a rejection would serve as a good indication that no one else could be awarded the claims.

It was with this purpose in mind and to protect its "319" and "401" machines that Singer acquired the Harris patent. However, Singer was confronted with still another problem: whether Singer's broadened claims, if allowed on a reissue application of the original Harris patent, would relate back to the early filing date of June 9, 1952 which would give Singer six months priority over Vigorelli's Italian patent, on the multicam and selector means, the particular mechanism common to the Singer "319" and "401"

machines; and whether, in the happening of such event, this earlier priority date would be given under the law of Italy to the Italian Harris patent which had been filed six months after the Vigorelli Italian patent. If the earlier date of June 9, 1952 were accepted in Italy it would give Singer priority in Italy as well as in the United States. On the other hand it was entirely possible that neither eventuality would occur, and that Singer would not have priority anywhere.

But, whatever the result might be, Singer felt that with the Harris patent, it was in a better position to bargain; and even though, Singer was anxious to adjust the matter by agreement with Vigorelli, Singer proceeded with great caution. Singer did not think it wise to reveal to Vigorelli at that time what its purpose or views were.

Litigation developed as anticipated but from an unexpected quarter—Brazil. Here, Vigorelli had filed a patent application, which under Brazilian law Singer felt compelled to oppose lest Vigorelli achieve what might eventuate into a dominant position. Accordingly, Singer filed opposition to the Vigorelli application in Brazil. Such a step, it knew, would be only the beginning for it foresaw, and rightly so, that to stop Vigorelli from obtaining dominant patent rights it would have to oppose in each country in which Vigorelli might choose to file. Right on the heels of the Vigorelli-Brazil opposition, Singer found itself faced with another application in Brazil by Brutsch & Co. on a multicam arrangement. Singer also felt compelled to oppose this Brutsch application; and also a further application by Vigorelli filed in Great Britain.

It was soon quite obvious that the race for a patent on the multicam mechanism promised to become bit-

terly contested—indeed, a desperate one with the victor unknown. And yet, in spite of the urgency of the situation, Singer adopted a strategy to have its planned encounter with Vigorelli appear "fortuitous" and to proceed with the "greatest caution" in making the first move, especially since it felt that Vigorelli—as a competitor—might not feel either too sure or too confident of its position. Singer decided to test and explore Vigorelli's reaction to some agreement and, if it was friendly, to hold a further meeting. Although it was planned by Singer that its New York patent counsel Stanford would go to Italy expressly for any arrangement that might be worked out, Singer went to great pains not to give the impression that anybody from its organization would make a special trip, preferring to have it appear that someone from Singer, while in Europe on other business, could handle the arrangements with Vigorelli. Stanford was to tell Vigorelli that Singer knew that at least two other companies were planning to acquire patents which might adversely affect it and Vigorelli and that standing together both could more effectively dissipate the effectiveness of such an acquisition. He was to convey the thought that Singer could assist Vigorelli. There followed a discussion between Vigorelli and Singer's Italian representative, Lando from which it was clear that Vigorelli had a "shrewd idea" of Singer's plan and was "purposely or otherwise" vague about the Brazilian patent—and pretended ignorance of Singer's opposition there.

During the negotiations, Singer for the first time heard from Vigorelli of a Gegauf patent covering a multicam mechanism which, according to Vigorelli, had been deposited by Gegauf in a small number of countries and that Vigorelli was negotiating with respect to it. Singer's endless quest for patents on the

multicam mechanism had failed to uncover any such patent but Singer was careful to hide this fact from Vigorelli. Singer proceeded then to attempt to learn from Vigorelli "unobtrusively and without any degree of emphasis" the basis of the discussions between Gegauf and Vigorelli. The fears aroused in Singer for the future of its "401" and "319" machines by the discovery of the earlier Vigorelli patent were now further sharpened by the discovery of the even earlier patent, which, according to Vigorelli, had also been deposited in the United States. It was imperative that Singer come to some immediate agreement with Vigorelli, for the alternative of pressing the Harris reissue in an attempt to frighten off Vigorelli and others had lost its value, since Singer feared that, if it did push this application, it would be revealing to Vigorelli and Geguaf the weakness of its position. To make matters worse, it was informed by its British patent counsel that its opposition to the British Vigorelli application would have failed. At this point, Vigorelli had also filed a United States application corresponding to its two earlier Italian patents.

Thus concludes the background against which the license agreement was entered into by Singer with Vigorelli on November 17, 1955. It can hardly be seriously contended that the agreement was a preliminary step to effectuate a conspiratorial plan or an attempt to monopolize. In truth, Singer's back was against the wall in this matter and it was only thru swift and clever tactics that it was able to wrest some sort of victory out of what promised to be total defeat or at best a Pyrrhic victory.

It is most significant that throughout its negotiations with Vigorelli and right through the execution of the license agreement, Singer had no independent knowledge or information with respect to the Gegauf

I patent. Singer had absolutely no contacts or dealings with Gegauf, whom it did not even know. Had it not been for Vigorelli's volunteering the very scanty information on the Gegauf I patent, Singer would have remained in total ignorance of it for prior to and even after learning of it, Singer had been unable to discover any trace of such a patent even though its search had been continuous and thorough. As late as November 14, 1955, Singer's German patent counsel was still searching for German and Italian applications with no success; it was not until January 1956, after its license with Vigorelli had been finally executed, that it discovered Gegauf's United States application. It was much later that Singer met Gegauf.

The fact that Singer knew that Vigorelli was negotiating with Gegauf about the patent did not charge Singer with knowledge of any possible wrongful purpose of these negotiations, or with the parties' intent (be it good or bad), nor did it impose on Singer a duty to make further inquiry. There is no evidence to support an inference that Gegauf knew of the negotiations between Singer and Vigorelli. At no time during the negotiations with Vigorelli was any mention made of excluding Japanese competition. There is no evidence that Singer was then contemplating, or that it had mentioned, that it planned to purchase any patent from Vigorelli, Gegauf or Messerschmitt.

The license agreement of November 17, 1955, which Singer made with Vigorelli provided (1) that Singer would not bring any infringement action against Vigorelli under the patents issued or about to be issued in any country with respect to the subject matter disclosed in Vigorelli's Italian patents 497,557 and 507,862—when embodied in sewing machines manufac-

tured and sold by Vigorelli; and (2) that Vigorelli would not bring any infringement action against Singer under patents issued or about to be issued in any country with respect to the subject matter disclosed in United States patents No. 2,693,778 and in United States applications by Johnson No. 471,766 and by Perla No. 386,684 when embodied in sewing machines manufactured and sold by Singer; and (3) that neither would institute any opposition, nullity or invalidation against or otherwise attack any of the above noted patents or applications and would withdraw any such proceeding if already instituted; but that in the event the parties did become involved in any office priority proceedings such as a "United States interference" or a "Canadian conflict proceeding", both would work to settle such proceedings in accordance with the laws and regulations of the patent office concerned.

The agreement was limited expressly to the patents which threatened to involve the parties in litigation over priority—the two Vigorelli Italian patents Nos. 497,557 and 507,862 and only "when embodied in sewing machines manufactured and sold by Vigorelli"; and the United States Singer patent No. 2,693,778, Johnson No. 471,766 and Perla No. 386,684, and again only when "embodied in sewing machines manufactured and sold by Singer".

The proviso not to sue each other for infringement and not to oppose each other's claims on these patents was perfectly consistent, proper and lawful with the exchange of licenses under their respective patents and, if the lack of opposition did result in permitting the issuance of broad claims to each one under his patents—it was not unlawful for it was being done for a lawful purpose. There is no duty, for public benefit or otherwise placed on a patentee or licensee

to oppose the claims of another in order to narrow or invalidate the scope of patent which might issue to the other. The provision to withdraw any interference proceedings which might have been instituted prior to the agreement and to settle interferences in accordance with the laws and regulations of the patent office involved "and in the spirit of the agreement" were steps—and lawful ones—necessary to effectuate the mutual promises and to carry out the obligation not to become involved in litigation with each other.

Neither licensee was nor could be sure enough of his ground to risk patent litigation. Each party in licensing the other, surrendered a valuable property right in exchange for permission to use the other's property.

We find that there was no agreement to use the legitimate means of a license to stifle competition by helping each other acquire broad patent claims and by agreeing to assert the patents only against certain competitors. We find that there was no agreement or understanding between Singer and Vigorelli that was not there expressly stated. There was no promise or commitment made by either of the parties with respect to licensing or not licensing, enforcing or not enforcing, by infringement action or otherwise, of any patent, then owned or subsequently to be acquired, or with respect to the use in any way of any such patent, alone or in conjunction with any other patent; and no agreement that either would restrict in any way its ownership of any patent.

We find that in approaching and in bargaining with Vigorelli, Singer was at all times dealing at arm's length, solely in its own interest for the purpose and with the intent of reaching a cross-licensing agreement. Singer's purpose in entering into the cross-licensing agreement with Vigorelli was to secure to

Singer the ability to sell its "401" and "319" machines in the various foreign countries where sale might otherwise have been foreclosed by enforcement of the Vigorelli patents, or at least to be free from the threat of litigation with respect to these patents.

b. Singer Gegauf license agreement

We have seen that during its negotiations with Vigorelli, Singer for the first time learned about the Gegauf patent and Vigorelli's negotiations with Gegauf. On October 20, 1955, Singer discovered that the Gegauf patent had been deposited in Switzerland on May 31, 1952, and at the same time obtained a copy of its corresponding Italian patent which enjoyed the same date. This patent disclosed (1) an embodiment of a zigzag stitch machine, having a stack of cams and a single cam follower, which by sliding lengthwise of the axis of the cams could engage any one of such cams, and (2) an embodiment of a zigzag stitch machine having a stack of cams with each cam having its own individual follower. In January 1956, in its continued and extended search, Singer learned that on May 20, 1953, Gegauf had filed a United States application corresponding to the Swiss application and bearing the date May 31, 1952. This was nine days earlier than the priority date of Singer's United States Harris patent No. 2,693,778 which had been filed on June 9, 1952.

At this time Singer also learned that Vigorelli had entered into a license agreement with Gegauf similar to that which it had with Singer.

In January 1956, Singer was advised that its Harris reissue patent was about to issue. Singer feared that an interference might be declared between this patent and the United States application of Gegauf. Singer

was therefore most anxious to negotiate an agreement with Gegauf similar to the one it had with Vigorelli. Armed with the knowledge that the Gegauf patent had priority of nine days (which it assumed Gegauf did not know), Singer felt that it was in a better bargaining position and thus Singer was anxious to conclude an agreement before the interference disclosed to Gegauf its superior position.

Singer did not inform Vigorelli of its plan however but did suggest to its Italian representative that, without arousing Vigorelli's curiosity, he find out the details of the Vigorelli-Gegauf agreement and the names of the Gegauf officials with whom Vigorelli negotiated or their patent attorneys as well as the location of their offices. Singer was particularly anxious to know what Vigorelli had found out with respect to Gegauf's patents which had induced Gegauf to drop its original demand of $160,000 and grant Vigorelli a license for nothing.

It is clear that Singer intended to negotiate with Gegauf separately and as secretly as possible. Although it made use of Vigorelli, it did so as a matter of necessity and solely to gain bargaining information. Vigorelli, on its part, apparently was just as secretive about its affairs.

Singer's representative, Dr. Lando, met with Vigorelli on February 29, 1956. As a result of this meeting, Lando was able to report that Vigorelli had stated that it had obtained a free license from Gegauf because of the comparative weakness of Gegauf's Italian patent, and because of the fact that Gegauf had deposited its patent in only four countries as opposed to filings in seventeen countries by Vigorelli, and because of Vigorelli's awareness of certain patents which Gegauf considered dangerous to its patent. Lando also reported that Vigorelli's curiosity as to Singer's

motive had been aroused, but he added that Vigorelli thought Singer was collecting information to oppose the Gegauf patent in the United States in order to prevent the sale of its machine there. Lando further reported that his (Lando's) expression of doubt as to this disappointed Vigorelli since Vigorelli was apparently hoping that Singer was about to get active against Gegauf in patent contests in the United States, all to its (Vigorelli's) benefit.

Gegauf and Vigorelli were not exchanging confidences nor were they seeking to promote each other's interests. The treatment accorded Gegauf by Singer was to be no more candid—Singer's objective being to keep Gegauf in the dark as long as possible and to disclose only what was absolutely necessary to the effectuation of Singer's plans. Singer had decided to approach Gegauf in substantially the same manner it had approached Vigorelli, that is, with intimations of litigation.

The Singer Swiss Manager informed Gegauf that Singer was desirous of discussing "patent questions". On April 13, 1956, a momentous meeting was held at the Gegauf factory in Steckborn, Switzerland. When entering negotiations at this conference, Singer knew that Gegauf had a patent issued in Switzerland with a priority date nine days before that of the Harris patent and that the principal claim of this patent read directly on the Singer "401" machine. Singer also knew that Gegauf had filed a United States application, claims of which Singer presumed would read on the "319" and "401" machines. Singer was also advised of the fact that Gegauf had an application pending in Germany, which might mature into a patent which would read upon the "319" and "401" machines, and that Gegauf also had an Italian patent the validity of which might be put in question due to the

manner in which it was written. Singer also had information that Gegauf was reported to have serious worries as to whether certain prior patents, if called to the attention of Patent Offices, would limit or invalidate its claim. Singer realized too that the Harris reissue application in the United States read on the Gegauf machine and that the various Harris patent applications on file in foreign countries, had claims which if they could be properly amended would read on the Gegauf machine.

Waterman of the Singer United States office reported on this 7½ hour meeting to New York as one which was not as straightforward as that with Vigorelli, due to a feeling on the part of Gegauf that its situation was superior and that it was "suspicious of our intentions"; that Singer did nothing to dispel Gegauf's fear that it was going to be hurt in the United States by the lower priced Japanese machines, because "one of the strong points" which was to be used in favor of the agreement was protection against the Japanese. Waterman also reported that Gegauf had thrown out a lot of topics having nothing to do with patents, among them a suggestion that there be a division of territories between Gegauf and Singer which "was brushed aside pronto in short order". Waterman also felt that Gegauf was very much afraid that Singer wanted to copy its machine and wanted a promise to the effect that it would not do so; and he left Gegauf with no doubt that Singer was going to oppose the issuance of its patent—in all four countries and that it could knock out its claim but that both could be hurt. So suspicious was Gegauf of Singer's motives that it drew a draft agreement consisting principally of promises by Singer not to copy its (Gegauf's) machine; it appears that the (Gegauf's

: a personal pride in it and attached a special
ie to it.

. b... se agreement between the parties was finally
ered into on April 14, 1956. At that time Gegauf
orn... Singer that it had called Vigorelli and told
of the agreement. Reporting on the meeting at
h the license agreement was signed, Waterman
ed that Mr. Gegauf said that he had called Vi-
lli to inform him of the agreement he was about
gn with Singer.

ie first part of this Singer agreement with
uf listed the Singer owned Harris Patent No.
,778 and reissue Patent Application No. 516,059
nine specified corresponding foreign patents and
ications (British, Belgian, Canadian, French and
an and four patent applications: Canadian, Ger-
Japanese and Swedish). It also listed the Ge-
Swiss Patent No. 310,788, and the Gegauf Ital-
and German patents Nos. 501,172 and 1,707,338
ctively; and the United States and German ap-
tions Nos. 358,377 and 11,654 respectively. A
nble recited that the parties acted in realiza-
of the fact that interference proceedings were
to be opened in the United States between the
r owned Harris reissue application and one or
Gegauf patent applications corresponding
s listed patents and patent applications. The
ties agreed not to do anything to restrict the
e of the claims of the other in any country re-
ng to the subject matter of the listed patents and
ent applications. Although the language is quite
d, this provision was interpreted and intended
Singer and Gegauf to mean that neither would
opposition, i.e., nullity and invalidation proceed-
against the other's applications in foreign coun-
es where such special proceedings were known.

It was also agreed that each would, in accordance with laws of the particular Patent Office, facilitate the allowance to the other in any country of claims "as broad as possible" relating to the subject matter of the enumerated patents and applications. Here again, although the parties speak of "any country" the only place where such a provision was significant (at least as far as Singer was concerned) was in the United States where Singer knew Gegauf's application preceded Singer's Harris patent and reissue patent and where it felt sure Gegauf would be awarded the claim as filed. In effect, all that Singer agreed to do was not to attempt to obstruct what it had no power to prevent and what in fact it knew Gegauf would eventually be awarded under the United States laws on the ground of priority. There was nothing illegal in this. We know of no rule of law which would make such abstention under the circumstances here illegal; and this is so even if Singer could have blocked the issuance of the United States patent to Gegauf. We have found no decided case (and none has been cited) which holds that one must contest with a competitor for priority in the Patent Office every time a claim is filed which affects his own patent.

In the agreement in paragraph 2, Singer also agreed not to attack Gegauf under any of its enumerated patents and not to challenge the construction of its "Bernina" sewing machine. As far as the United States was concerned, immunity to Gegauf would follow from the awarding of the United States patent to Gegauf. It was reported by Singer that it felt it was giving up something of value in Canada where Singer had an application pending filed June 22, 1955 which it hoped might issue on a broad claim, and in France where Singer had obtained a patent

on a broad claim on June 5, 1953. Why it should feel so is not clear in view of the fact that these applications were filed after the Bernina, but that question need not detain us since it is Singer's intent and motive with which we are concerned and not the soundness of its reasons.

And in the following paragraph 3, Gegauf agreed not to attack Singer directly or indirectly in any country on the basis of its enumerated patents. This simply meant that Gegauf would not take steps to prevent Singer from manufacturing and selling the "319" and "401" in any country where he had filed patent applications by charges of alleged infringement.

These paragraphs 2 and 3 were the essence of the agreement and were considered so by the parties.

By paragraph 4, Singer agreed not to construct a slavish copy of the "Bernina" machine, as a whole or of the mechanism it included. The significance of this was in the fact that Singer had not yet put its machine on the market and that it made this promise to allay the fears of Gegauf of piracy of its design.

By paragraph 5, Singer undertook, on request of Gegauf, to give to Gegauf "the amical assistance of its patent attorneys for the defense of any of the above mentioned Gegauf patents or patent applications against *an action in cancellation.*" Singer was reluctant to enter into this undertaking because it feared that it might appear that the parties were acting in collusion. However, at Gegauf's insistence, the clause was included; but all that Singer felt obligated to do under this paragraph was give Gegauf "an opinion" as to the merits of a challenge in the event its patents in a foreign Patent Office were attacked as invalid. Under no circumstances was Singer prepared to, and the agreement did not obligate it to

legally assist Gegauf in a suit to assert its patents. It was Singer's position that if he wished to sue someone "that was entirely up to Mr. Gegauf."

As we have noted, this agreement was limited to the Harris patent; no mention was made of Singer's Perla or Johnson patents because Singer was not anxious to have Gegauf know of its "319" machine.

And, finally in paragraph 6 of the agreement, it was agreed that each would tell the other prior to the execution of the instant agreement of any other agreements concerning the enumerated patents and patent applications. In compliance with this provision, the parties exchanged the information which was already known to them both: that each had an agreement with Vigorelli; and that Singer had agreed not to sue Vigorelli on any claim that it might obtain on the Harris application.

We find that the agreement constituted the entire understanding of the parties; that there was no agreement or understanding about how each would prosecute, license or otherwise restrict its ownership of any patents it might obtain—or that eventually Singer would purchase the Gegauf patent. Although Singer had the idea very much in mind, it did not think it advisable to mention it to Gegauf at that time. Although Vigorelli knew that Singer and Gegauf had entered into an agreement, there is absolutely no evidence that Vigorelli was in any way instrumental in bringing the parties to agreement. In truth, it was Gegauf who told Vigorelli that it was negotiating an agreement with Singer; Singer did not mention the matter to Vigorelli nor did Singer ever express its hope of acquiring the Gegauf patent.

The undisputed facts support no conclusion other than that the underlying, dominant and sole purpose of the license agreement was to settle the conflict in

priority between the Gegauf and Harris patents and to secure for Singer a license right under the earlier patent in order to free the marketing of its "401" and "319" machines in various countries, particularly in the United States where enforcement of the Gegauf patent might very easily have foreclosed the market to Singer. As to this Singer had much to lose for Singer had spent considerable money developing these machines.

And, we find that Singer had a secondary purpose; it was the only one disclosed to Gegauf, and in fact the very one used to convince Gegauf of the advisability of entering into an agreement. It was Singer's desire to obtain protection against the Japanese machines which might be made under the Gegauf patent; this sprang from a fear which Singer had good reason to believe to be well founded.

c. Singer-Gegauf assignment

Following the Singer-Gegauf negotiations and on April 20, 1956, Waterman went to Italy and there met with Vigorelli. He wrote that "what Vigorelli had on his mind was that now that Singer, Gegauf and Vigorelli had arrived at certain agreements, they should thereafter act in concert against others"; that such a suggestion Singer "very promptly said was out of the question", and that the best thing was "for each one to prosecute his own patents and take care of any cases of infringement that might appear"; that that "certainly would be Singer's attitude with respect to the patents that it owned"; and that upon learning that there "could be no joint action" the subject was dropped.

Vigorelli was told by Waterman "in very general terms" of the agreement with Gegauf but not of the

special provisions forbidding Singer from duplicating Gegauf's machine. The result of the conversation and the meeting was that Vigorelli understood that it was Singer's position that each must prosecute his own patents and that Singer could not help Vigorelli in that respect. It was at this meeting that Singer began to lay the foundation for an approach to Gegauf by Vigorelli relative to the acquisition of its patent. It was Singer's opinion that "pressure in the right direction" was what would bear fruit. It was also at this time that Singer discovered an earlier Belgian patent owned by Messerschmitt embodying the mechanism of its 319; and as Stanford expressed it Singer had been "topped again".

Stanford and Vigorelli's patent attorney Majnoni had a friendly discussion during which Stanford expressed concern over the success of its Harris-Gegauf interference and over the position of Gegauf and its ability to successfully assert its patent in the United States. Stanford stated that Singer had not approached Gegauf on the matter of acquiring the application because Singer thought the price would go skyhigh. The conclusion of the talk was that Majnoni, who was friendly with Gegauf's patent attorneys, was to mention to them that Singer, if it had the Gegauf patent, could "best handle the patent situation." The services of Vigorelli were used by Singer, because Singer knew that Vigorelli was better acquainted with Gegauf's people, and that Gegauf was somewhat mistrustful of Singer's motives and might react more favorably if the suggestion came from a source other than Singer.

On June 19, 1956, Singer's Italian representative reported to Waterman that he had received a letter from Majnoni in which the latter said that he had spoken to Gegauf's attorneys about the advantage of having the Gegauf application assigned to Singer in

such a way as to "prompt an initiative to this end by Gegauf". He added that he had left the matter up to Gegauf, but assured Singer's attorneys that the matter was discussed "without in any way letting it be known that your (Singer's) firm was aware of the advances which would be made". In these negotiations and to this limited extent Vigorelli's patent attorney was acting as Singer's agent. There is no evidence, however, that his authority extended to anything more than to effect a rapprochement between Singer and Gegauf.

Subsequently, and in September 1956, Singer was advised by its Dr. Lando that, according to Majnoni, Gegauf's "mind has been directed" to the convenience of transferring its United States application to Singer by the fear that there was a United States patent which might anticipate and invalidate Gegauf's German patent and that such patent might have been disclosed by Vigorelli's United States application; that Vigorelli might agree to withdraw its United States application on condition that the Gegauf application be placed at Singer's disposal for broader protection in the United States by Singer's invoking the Harris and Gegauf patents. Dr. Lando also advised Singer that Gegauf was still suspicious of Singer's motives regarding its patent and needed reassurance.

Early in August 1956 the matter of Singer's purchasing the Gegauf United States application had been directly broached to Gegauf by Waterman and Stanford on the occasion of a visit by Gegauf, Jr. to the New York Singer officers. At this meeting, Singer emphasized the legal and practical difficulties of enforcing a United States patent against the large number of infringing imports which were coming into the United States.

In September Gegauf wrote Singer favoring the idea of doing something "against Japanese competition" in the United States. Singer replied that an arrangement could be reached "equally advantageous to both", and that it would be helpful if Singer were to be informed of the status of the Gegauf United States application. Singer gave assurance to Gegauf that this disclosure was for the sole purpose of reaching an agreement.

A conference was held in Landau, Germany, on September 23, 1956 attended by Gegauf, Sr., Gegauf, Jr., other directors of the Gegauf Company and Waterman and Stanford. Gegauf, who placed great importance on its United States claims, wanted $1,000,000 for its application but would consider $250,000. As this sum was more than Singer was willing to pay, Stanford ended the negotiations "on a friendly basis."

On August 22, 1956, the Patent Office had declared an interference between the Harris reissue and Gegauf applications. Not having heard from Gegauf, Singer wrote in October 1956, suggesting that they settle the interference in accordance with the terms of their license agreement so that the prevailing party could secure a valid patent. Later and on March 15, 1957, Singer abandoned the interference set up between Singer's Harris claim and the Gegauf claim. On April 1, 1957, the Patent Office dissolved such interference.

During the interval, nothing further was done by Singer toward securing the Gegauf application; however, when Singer was notified in September 1957, that its Harris reissue application was about to issue as a patent, and presuming that Gegauf's patent would soon issue, Waterman approached Gegauf. At this time, Waterman pointed out that since the patents

were about to issue, their mutual interests required that something be done to protect themselves from the Japanese infringing machines. Waterman also, quite correctly, pointed out that, under their license agreement, neither was in a position alone effectively to protect its respective patent. Waterman suggested that although he had not planned to go to Switzerland, he would endeavor to meet with Gegauf. To this Gegauf replied that he would be happy to meet Singer to discuss "mutual enforcement" of its United States application and the Harris reissue against "infringing products of the foreign manufacturers."

Although the declared purpose of the meeting was enforcement of their patents, Waterman came to it with two agreements—one, providing for an outright sale of the Gegauf application in exchange for a single lump sum payment; and the other, providing for a sale in exchange for a license back and yearly payments. The first agreement gave Singer irrevocable title to the application and freed it from the necessity of "dealing any further with Gegauf in connection with this general subject." The second agreement would have had the advantage of enabling Singer at any time to terminate the agreement and revert back to the license only, with no need for further payments.

Both of the proposed agreements related solely to the Gegauf United States application, which was also the subject of the license agreement.

On October 16, 1957, Waterman and his patent attorney met with the Gegauf people to discuss the assignment which would give Singer "complete ownership" of the patent and in return license Gegauf to build and sell machines. Singer endeavored to give the impression that the "subject was not overly important" to Singer. Waterman reported that the price agreed on for the outright purchase of the appli-

cation was reached only after considerable discussion; it was $40,000. Singer expected that an agreement "if not already reached" would be finally settled shortly.

But, Gegauf was not so willing as Singer had assumed. Within the week Waterman was reporting to Stanford that the $40,000 had risen to $125,000 for a lump sum payment, or $25,000 per year, as long as Singer kept the patent, with a minimum duration of the agreement of 3 years. He also sent word that Gegauf insisted on the right to license three companies and did not wish the divisional claim assigned to Singer as it intended to license that to some interested European company. Gegauf had carved out of its original patent application a divisional application which was filed on December 2, 1957. Waterman instructed Kirker, Singer's Swiss patent attorney to pass the word to Gegauf's patent attorney "without making any comment on the first two conditions" that the refusal to assign the divisional claim would almost surely make the agreement impossible as "we all along were discussing application including divisions", that either standing alone was "weak". The Government makes much of this word, which on the telegram (Govt. Exh. 50) appeared as "leak", to support a finding that defendant was plugging up "leaks" in its patent wall. We think it more probably a spelling error, but either way find no significance in the word. Singer replied that the value of the Gegauf patent greatly decreased when other people were licensed; that it understood that Vigorelli was a necessary licensee, and that it favored the plan of $25,000 yearly and that the "divisional claim must be included."

The following day Kirker reported Gegauf's position to Stanford. Gegauf was insistent that the agreement must relate only to the basic application

and that "the divisional application will not be included." Gegauf had the idea that European companies were highly interested in the divisional application and that it could sell this to them. Kirker also related to Stanford that Gegauf wished to be informed when Singer intended to sue a European company for infringement of the patent; that he pointed out that it would be better to set forth the condition in another form, viz. to include in the agreement the name of the companies which Gegauf had in mind, and to restrict said condition to such companies. Kirker also reported that the amount to be paid had been discussed: $125,000 for a single payment or $25,000 per year for a minimum of three years. Kirker had then expressed the opinion that the amount suggested was extremely high but that probably an agreement might be obtained on the basis of half these sums; that the $40,000 mentioned by Singer was considered a minimum. He summed up Singer's position as being all or nothing at all: "No question of two separate agreements and two separate payments."

In the meantime, talks were suspended while Stanford and Singer's patent department obtained from Gegauf's patent attorney copies of the basic and divisional applications to study them to aid them in reaching a decision.

At this examination Singer discovered for the first time from Gegauf's United States patent attorney that there were three United States applications relating to zigzag mechanisms; the first was the basic application No. 358,377 (this was issued April 29, 1958 as Gegauf I—Patent No. 2,832,302), in which Singer was vitally interested; the second, it believed but was not sure, related to the idea of having "two zigzag mechanisms" for "shifting at the will of the

operator from one mechanism to the other" (if this was the "divisional" application which Gegauf had in mind, Singer stated that it had no interest in it and did not require it to be included in the agreement); the third application, which was not filed, interested Singer because it disclosed and claimed vital and essential material taken from the application No. 358,377.

With respect to the desire of Gegauf to be consulted before Singer instituted infringement suit of Singer against European manufacturers, Singer stated that "if necessary", it would agree to permit Necchi and Pfaff in addition to Vigorelli (who was already licensed) to sell their machines in the United States without charge of infringement. Stanford authorized Kirker to go as high as $75,000 for the "outright sale" of the patent application although it felt it should pay only $62,500. Kirker then suggested to Stanford that he have an interview with Gegauf and his attorney.

This interview was held and revealed that the position of Gegauf had been considerably altered since Stanford's visit (a month before). Gegauf's position now was that while it had no objection "to making an agreement with Singer, in order to stop as far as possible Japanese competitors in the United States market", it was willing to do so only under certain conditions. First, that Singer would not manufacture under the Gegauf application. This condition was the result of an objection made by Gegauf, Jr., that perhaps Singer was interested in acquiring the Gegauf application not to act against competitors but rather to be free of infringement claims by Gegauf. Second, Gegauf insisted that it retain the right to sublicense "one European company" out of a list of European companies. Finally, Gegauf stated that

the $125,000 asked for the application and the divisional application was cheap and that it could not go lower since it could get more money if it licensed the invention. Kirker replied that there was no comparison since a sale to Singer was insurance against common competitors and that was why Singer was willing to pay. Gegauf asked Kirker to make a definite offer, to be rejected or accepted, closer to $125,000 than to the $40,000 proposed by Singer, declaring, however, it would not bargain. This came as a surprise. Singer had been led to believe that Gegauf would reduce his figure considerably. Kirker told Gegauf that he could go no further with the discussion because he was not authorized to do anything but offer $40,000 as a maximum. What was bothering Gegauf throughout was his fear that if Singer stopped the Japanese infringements in the United States with the Gegauf patent, they would go to Europe where Gegauf was not in as good a position to stop them because his application had been filed in but four countries and the divisional application had been filed nowhere in Europe.

Kirker was of the opinion that, due to Gegauf's attitude, Singer might have to go as high as $100,000 and that, although Singer might offer $75,000 and then $85,000, Gegauf would make no substantial concessions.

The policy of Singer was to obtain such control of the Gegauf application as would put it in a position to get the very best patents "to bar imports which would violate these patents", while the elimination or curtailment of European imports was "an important but secondary objective". Singer was, naturally, most reluctant to grant licenses to the Europeans and resolved that, if it had to pay Gegauf a higher price it would try to limit the number of licensees, aware

that these licensees would lessen the value of the patent.

From the report of Stanford's meeting with Gegauf, it was apparent that, although Singer had been at great pains to conceal its interest and need for the Gegauf application, Gegauf was not misled or in the dark and had no intention of finally closing with Singer at a cheap figure. In order to fortify his vantage position, Mr. Gegauf retreated to the surroundings of his own home on a pretext of illness, thus obliging Kirker and Stanford to follow him there for the interview instead of meeting them at the plant in Steckborn as had been previously arranged. That Singer was aware of the employment of this strategy is evident from Stanford's statement that they "privately doubted the illness" of Gegauf and that Gegauf looked "quite hale and hearty." Although Singer was most anxious to conclude the assignment, it decided to assume an offensive position rather than petition, and began the negotiations by questioning Gegauf on its patent protection in Europe. Singer also put these questions in an attempt to find out whether Gegauf knew of any other patents which might affect the Gegauf patents which Singer sought. In addition, Singer maintained that under the license agreement it had the right to manufacture under Gegauf's divisional application as well as under the original application. Gegauf's son argued that, since that agreement had been signed at a time when an interference was pending between the patent applications—the license ran only to the disputed claims and not to the patent application as a whole. He then advanced the argument that, if stopped by Singer in the United States, the Japanese manufacturers would run to Europe; to this Singer answered that a greater risk was run in Europe if Singer were not permitted

to first stop infringements in the United States. Gegauf asked that there be a provision that Singer assist Gegauf in actions under his patents against his competitors in Europe. Singer, however, rejected this proposal. The matter of licensing was then taken up. Singer "avoided giving a license to a third party" under the patent it hoped to obtain, by agreeing not to attack the importation by Vigorelli and Pfaff without Gegauf's consent; and to Gegauf went the right to sell its Swiss-made machines in the United States.

After "considerable thought," Singer, at Gegauf's request, then made its offer of $75,000 in Swiss francs because they had a "larger sound". Gegauf countered with $125,000 and Singer after considerable discussion brought him down to $100,000. Singer continued "to drive home the point" that Gegauf stood to benefit more by enforcement of the patents in the United States because the "Brother Pacesetter" machine, a big selling and patent infringing Japanese-made machine, was in direct competition with the Gegauf machine, for both machines were of the free arm type. This was not so with respect to Singer, for it made the flatbed type machine. The point apparently reached home, for Gegauf "suddenly" offered its application to Singer free of charge, if Singer would agree for the next five years to sell 10,000 of Gegauf's free arm machines in its shops. Stanford expressed doubt that Singer would be willing to do this unless it could get an exclusive distributorship. A response came with alacrity that, in fact, Gegauf was thinking of changing its agents in the United States. Stanford promised to discuss the proposal with Singer's executives and then quickly brought the conversation back to his principal objective—"patents and patent questions".

A price was finally agreed on at $90,000. Prior to parting, Stanford stated that Singer would not sell Gegauf's machine under the Bernina name in its shops and Gegauf informed Stanford that it could not give Singer an exclusive agency. The agreement assigning the patent application and the division, was drafted by the Singer people the next day and a check for $90,000 was drawn on a Swiss bank to the order of Gegauf.

Gegauf then on December 5, 1957 assigned to Singer its United States application No. 358,377 and all right in the inventions claimed therein and to all United States patents which might be granted thereunder.

The assignment did not recite the divisional application because its filing had been too recent. It was the intent of the parties, however, that the divisional application would also be assigned. The accompanying agreement executed the same day, after reciting the continued existence of the prior license agreement mutatis mutandis; and the assignment by Gegauf to Singer of United States patent Application No. 358,377, and to the divisional application carved out of this application which had been filed just prior to the agreement provided that in consideration of the sale, Singer would pay Gegauf $90,000 and that Singer would grant Gegauf a non-exclusive royalty free license to sell in the United States sewing machines made in Gegauf's own factory in Switzerland which were of the type disclosed in the assigned patent applications. Singer also agreed not to institute, without the consent of Gegauf, legal proceedings asserting the patents when issued against Pfaff in Germany or Vigorelli in Italy, with respect to sewing machines manufactured in their respective German and Italian factories. Singer further agreed not to make a slavish copy of the Bernina machine as a whole or of its

mechanism. Gegauf undertook to assist Singer, at Singer's expense, in procuring a valid patent based on the applications.

With the exception of these specific limitations on Singer's right to assert the Gegauf patent when issued, no agreement was made or understanding reached by the parties with respect to the licensing, enforcing or use of their patents. These writings were the entire agreement of the parties.

If one were to describe the attitude of these alleged "conspirators" throughout, it would have to be in terms of suspicion, wariness and self-preservation. It is most striking that, throughout, their dealings were characterized by an absence of unity or identity of any common purpose or motive. Singer's sole interest was to protect its "401" machine against all infringing machines. *Poller* v. *Columbia Broadcasting*, 368 U.S. 476. This extended not only to machines originating in Japan but everywhere, including Europe. Singer was not concerned with the effect upon Gebauf in Europe as long as it did not affect Singer products in the United States. Gegauf's prime interest was the protection of its machine in Europe from Japanese infringements—a danger which it was far from risking for the sake of dealing as it did with Singer. Gegauf gave but little weight to what might happen to Singer in the United States so long as Singer's danger did not affect Gegauf in Europe.

By far the largest number of infringers of the Gegauf patent and invention were the Japanese. Gegauf was conscious, as were all in the sewing machine business, of the growing inroads of Japanese machines in the markets all over. Gegauf knew too that a number of these machines would violate the patent that would issue on its application.

Singer had told Gegauf, with complete frankness, that the reason Singer wanted the Gegauf patent was that Singer could enforce it better than Gegauf could. Gegauf well knew when it negotiated with Singer concerning the transfer of the patent that Singer expected upon acquisition to enforce the patent and that enforcement would most certainly include Japanese manufacturers who were the principal infringers. Singer stated that it was willing to pay a substantial sum for the patent so that it might enforce it.

The fact, however, that Singer had this unconcealed purpose and intent and that Gegauf knew or was advised of it does not spell out or sustain an inference that there was an unlawful conspiracy or agreement to exclude or not license one particular competitor; nor does the fact that Gegauf shared with Singer a common concern over Japanese competition. The fact that there may exist a motive for a conspiracy does not establish its existence; inferences of this nature may not be supported on a foundation built alone on the sands of suspicion.

Nor does the fact that the Gegauf patents in the hands of Singer incidentally would inure to the benefit of Gegauf and Vigorelli make their acquisition an unlawful patent pool. Singer acquired the patents only after extended bargaining, and on the best lawful terms it could obtain from Gegauf. While it is true that the use of the Gegauf patents in conjunction with its own patents gave Singer more power over infringements than it would have had with its patents alone, this is so with most patent acquisitions and it is a lawful power which comes to an independent patent owner.

Neither party was eager for the agreement finally made. It resulted from a fixed determination on each one's part to give and pay for nothing more than was

absolutely necessary to secure its respective end and to carry on the protracted negotiations as distantly as possible.

A like observation may be made with respect to Vigorelli. Singer made use of Vigorelli's knowledge and experience in dealing with Gegauf in its preliminary negotiations concerning the acquisition of the Gegauf patent. There is no evidence that Vigorelli played any further part in realizing Singer's purpose or that it was even kept informed of the progress of the negotiations.

No agreement or understanding was reached by Singer and Vigorelli at any time that Singer would acquire any patent or that Singer would license, enforce or restrict in any way its ownership of any patent owned or which it might acquire.

As a nonexclusive licensee of a United States patent owned by a foreign manufacturer who had neither committed himself nor authorized Singer to protect the patent from infringement and whose principal interest lay in Europe, Singer in the United States felt at the mercy of infringers. Singer thus realized the need for independent ownership of the patent.

Singer admits that a copy of its "401" machine could be excluded under the Johnson patent, which patent was a result of its own research. However, it felt that a copy of the "401" machine modified only to the extent of removing or immobilizing one of its two followers would not infringe the Johnson patent and that, therefore, the acquisition of Gegauf No. I which covered the idea of a single cam follower which might be engaged with any one of the cams, was necessary to exclude such a modified copy of the "401" machine. Whether in fact it did need the patent to protect its machine, is unnecessary to determine for we find that this was the motive behind the acquisition.

The purpose behind Singer's insistence in acquiring the Gegauf divisional application which issued as Gegauf II was the need to protect a cross-license agreement it had entered into on April 16, 1957 with Messerschmitt giving the latter the right to sell Singer's "319" multiple cam machine covered by Singer's Perla application. The Gegauf divisional application, which had priority over Perla, disclosed and claimed the same type of mechanism as that embodied in Messerschmitt's machine and Singer's "319," with the difference that the Gegauf II mechanism was incapable of combining intelligence from two cams simultaneously to produce a zigzag stitch. Singer felt that unless it acquired this application, Gegauf would obtain a patent based on this application by the use of which it could block Messerschmitt's sales of its multiple cam machine in the United States, and subject Singer to a suit for breach of contract by Messerschmitt. However, since Singer was dealing unilaterally with each company, Gegauf did not know this. Singer refrained from telling Gegauf why it needed the divisional application, fearing that the price, already high, would be that much higher if Gegauf were informed.

We find that Singer's motive in acquiring the divisional application was not only perfectly consonant with good business practices, but was entirely lawful. This brings us to the Messerschmitt agreement.

d. Singer-Messerschmitt license agreement and subsequent assignment

Although Messerschmitt is not named a co-conspirator, the dealings Singer had with it are claimed by the Government to further evidence Singer's intent and reflect its state of mind to acquire broad patent protection in order (1) to further the common

design of the three conspirators to unlawfully exclude Japanese imports; and (2) to help Singer achieve a monopoly and unlawfully exclude all competition.

The events leading up to the Messerschmitt license were as follows. While Singer at the end of 1956 was in the midst of tooling and preparing the manufacture of its "319" machine in the United States and Scotland for worldwide distribution under its Perla patent application, it discovered the Messerschmitt multicam machine. This machine contained, as did the "319", a plurality of cams, each with its own follower—the basic feature of such multiple cam mechanism. We have already noted that Messerschmitt was a German corporation engaged in the manufacture and sale of sewing machines including zigzag sewing machines. Singer had filed its United States Perla application covering the "319" on December 8, 1954, but Singer believed, and with good reason, that Messerschmitt had filed its patent application in Germany prior to that date. Singer entertained this belief even though up to March 15, 1956 it had been unable to locate the Messerschmitt patent or patent application. In the meantime, Singer was filing corresponding Perla applications in twenty foreign countries. The situation became really acute when in 1956 Singer was advised by the German Patent Examiner that he was holding its Perla German application in abeyance because of a prior filed German application, which Singer suspected was one filed by Messerschmitt. Because of its inability to obtain any information on its own, Singer was forced to seek a conference with Messerschmitt. Just before the conference in April 1956, Singer discovered a Messerschmitt Belgian patent with a priority date fourteen days earlier than the Perla United States application, but subsequent to the Perla invention. Thus, while Singer might obtain

a patent in the United States which would dominate the "319" machine, Messerschmitt might obtain a patent in many of the foreign countries based on an earlier priority date, thereby exposing Singer to probable infringement liability to Messerschmitt in many countries where it planned to manufacture or sell its "319" machine.

At this time, Singer was tooling and otherwise preparing to manufacture the "319" machine in Italy. Italian patent counsel advised Singer that the "319" machine infringed the Messerschmitt Italian patent as issued. The infringement, Italian counsel advised, lay in the fact that the Messerschmitt patent disclosed the idea of a plurality of cams, each with its own follower, and that under Italian law such disclosure established the scope of the patent. Counsel further advised Singer that while there was a good chance that the Italian courts would hold that the Messerschmitt Italian patent had been anticipated by prior art, namely Gegauf and Vigorelli Italian patents, there was a litigable issue involving some risk to Singer.

Singer's Italian representative believed that Messerschmitt might undertake legal proceedings to protect its Italian patent. If Singer litigated and lost, Singer would be exposed to substantial liability to Messerschmitt. When transmitting the opinion of Italian patent counsel, Singer's Italian representative expressed the hope that the opinion would help Singer decide "whether or not it would be advisable to include Messerschmitt amongst the signers of the non-aggression pact". The representative was referring to the fact that Singer had made a cross-license agreement with Vigorelli and a cross-license agreement with Gegauf and that the opinion of Italian patent counsel might be helpful to Singer in deciding whether to make a cross-license agreement with Messerschmitt.

That Singer was correct in its appraisal of the Messerschmitt position was borne out by Messerschmitt's attitude at the conference that it would succeed in the United States as well as in other countries. However, after examination of the "319" machine, Messerschmitt agreed that, since their respective machines were identical in essential principles, an amicable settlement would be to their mutual benefit as neither of them would profit from litigation.

Here again, the record discloses that the relation between Singer and Messerschmitt was far from intimate or confidential. Messerschmitt was full of confidence that it would prevail over all with its patent. Singer, in order to deflate this confidence of Messerschmitt, was pushing especially hard on its "Perla" United States application. Singer hoped that thus it might have an interference declared between the Singer and the Messerschmitt United States applications and thereby gain more bargaining power.

Because of its earlier invention date, Singer felt confident that it would prevail in the United States in its Perla application in spite of its later filing date and that, as soon as Messerschmitt learned of the interference (of which Singer did not inform it), Messerschmitt would come to Singer; but the converse of this would be true in Europe because of Messerschmitt's prior filings.

Singer's confidence, however, suffered a severe blow when in May 1956 it discovered that Messerschmitt had filed in Great Britain, the very country in which Singer was tooling its machine. Although the meeting with Messerschmitt was scheduled for August 1956, Singer kept putting it off until September 1956, to make sure that by that time Messerschmitt would learn of the interference Singer was antici-

pating between their respective United States applications. This interference was declared by the United States Patent Office on September 17, 1956. The interference involved a mechanism by which information is taken from each of a plurality of cams by its own follower.

A meeting was held subsequently at which the parties agreed to settle their patent conflict by cross-licensing. Pending the meeting, Singer withheld filing opposition to Messerschmitt's German patent application. This German application related to a construction of a manually operable means for controlling the lateral motion of the needle of a zigzag sewing machine. This was a construction which Singer had good reason to conclude was anticipated by the Singer-owned Tiesler German patent, which was about to expire. Singer, however, saw to it that Messerschmitt was advised of its claim of anticipation and of Singer's position that Messerschmitt's machine infringed the claim of the Tiesler German patent. Singer hoped that by this step it might bring Messerschmitt to a point where its attitude might be more conducive to fair bargaining. At this time Messerschmitt was becoming more difficult in its demands. In fact, Messerschmitt had stated that it would enter into no license agreement with Singer unless Singer agreed to let Messerschmitt manufacture machines for Singer.

On December 11, 1956, the Singer Patent Department drew up a report on the infringement status of the Singer "319" machine throughout the principal countries of the world. The report stated that:

> (1) The "319" machine infringed recently issued Belgian and Italian patents owned by Messerschmitt. Messerschmitt had corresponding applications in Germany and Great Britain,

and it could be fairly presumed that patents would soon issue in those countries.

(2) Messerschmitt had a corresponding application in the United States which was on the date of the report involved in interference with Singer's Perla application. Singer expected to prevail in this interference proceeding and receive claims that would cover the "319" machine and be infringed by the Messerschmitt machine.

(3) The question confronting Singer was what action it should take in connection with Messerschmitt so that Singer could freely manufacture and market the "319" machine in Germany, Belgium, Italy and Great Britain.

(4) It would be to Singer's advantage to have a cross-licensing agreement executed with Messerschmitt as soon as possible in view of the present or potential infringement of the "319" machine in Italy and Great Britain.

(5) Messerschmitt undoubtedly realized that it would lose the United States interference proceeding and that its machine would be subject to an action for infringement by Singer, based on several Singer-owned patents.

Because of the inability of the parties to agree, Singer obtained a postponement of the Perla interference for Messerschmitt. Singer, however, directed immediate filing of opposition to the Messerschmitt German application. Singer went farther and explored and investigated the legal possibilities of a law suit against Messerschmitt on the Singer German patent, even though it had expired. As Singer's Patent Department described it, the situation contained all the ingredients for "a patent poker game with each party holding a good hand".

It was the opinion of Singer, however, that rather than lose its present market in the United States, and be in a position where it would have to enforce

its patent against Singer in Great Britain and Italy, Messerschmitt would be willing to exchange royalty free licenses in Europe in exchange for a royalty free United States license, and this without insisting upon any further business promises of Singer.

In March 1957, Messerschmitt sent Singer an executed cross-licensing agreement which however was not acceptable to Singer for it failed to specify the machines to be licensed by Singer. A revised agreement was executed specifically limiting the license granted; and now we consider this revised agreement.

Under this agreement of April 16, 1957 made with Messerschmitt, Singer agreed not to bring any infringement action against Messerschmitt under the rights derived from patents issued or to be issued in any country with respect to subject matter disclosed in three annexed drawings which disclosed (1) a manually operated zigzag sewing machine, (2) a straight stitch sewing machine, and (3) a machine carried multiple cam zigzag machine. Messerschmitt in turn granted to Singer a license to manufacture and sell sewing machines embodying subject matter disclosed in Singer's two German patent applications, which disclosed the Singer "401" (Johnson) and "319" (Perla) machines.

The agreement permitted each to continue to manufacture and sell its respective machines without interference proceedings and protracted and expensive patent litigation, and without royalties. It ensured this for Singer and Messerschmitt agreed not to institute any opposition, nullity or invalidation proceedings against each other's patents or patent applications corresponding to Messerschmitt's constructions as illustrated in the drawings annexed to the agreement and to Singer's German applications and to settle any Canadian or United States inter-

ference. This provision was identical to that found in the Vigorelli agreement which we have found to be in all respects legal. There was no other understanding between the parties with respect to the licensing, enforcing or other use of their patents.

The freeing of the "319" machine from any claim by Messerschmitt without payment of royalties was extremely important since at that time Singer was selling its "319" machines at the rates of 65,000 per year in Europe. As a result of the agreement, Singer was not only free to continue to sell its machine but was released from all claim of liability for past infringement.

Complying with the understanding, Singer withdrew its interference to the Messerschmitt German application on the manually operable means.

It is conceded by the Government that Singer's reason and motive for entering into the license agreement with Messerschmitt was to free its "319" machine from any of Messerschmitt's patents. It contends, however, that, without the concerted action of Messerschmitt, Singer alone was acting in the accomplishment of the alleged conspiratorial purpose when Singer attempted to obtain an assignment of all Messerschmitt's patent applications and thus place Singer in a position to exclude others. The Government urges that although Singer acquired Messerschmitt's United States application but failed to acquire the patent, its attempts are evidence of this purpose and also of its intent to monopolize. The intent to monopolize is particularly evidenced, says the Government, by the fact that the Messerschmitt patent application No. 548,481, which Singer acquired, encompassed more than was necessary to protect the "319" and "401" machines—namely, an automatic feeding mechanism which was not part of any ma-

chine Singer was then manufacturing or contemplating doing so (but in which it was interested for future development).

Under the assignment executed June 4, 1957, Messerschmitt assigned to Singer its United States application No. 548,481 in exchange for a non-exclusive, non-transferable, royalty free license to manufacture and sell sewing machines disclosed in the application or any patent which might be granted on it and for Singer's further agreement to use its best efforts to prosecute the application in order to acquire a good and valid patent if possible. The rights of the parties under the license of April 16, 1957 were specifically reserved, including the right in each party to license anyone else under the specified machines.

The Messerschmitt United States application had claims of a dual nature: (1) a stack of cams for controlling the lateral vibration of the needle bar which was common to the Singer Perla application and to the "319" machine; and (2) a claim which was not common to the "319" or any of the three machines drawn in the license agreement—i.e., a stack of cams used to control the feeding mechanism. Since neither the "319" nor the Messerschmitt machine embodied the latter concept, the license which Messerschmitt had given Singer did not encompass this mechanism. What Singer received therefore under the assignment was something in addition to that which it had received under the license agreement.

Following the assignment to Singer, the interference between Messerschmitt application No. 548,481 and the Singer Perla application was dissolved since Singer then owned both applications. On October 22, 1957, the Perla United States patent issued to Singer. Singer in accordance with its agreement did prosecute the subject matter of this Messerschmitt application,

he feed mechanism, but was unsuccessful in ob-ing a patent on it after several rejections, and rdingly abandoned it. Messerschmitt, when it gned its application to Singer, gratis, was fully re of the dubiousness of the claims which Singer its own expense undertook to prosecute.

There was no agreement or understanding between nger and Messerschmitt, and there was no promise commitment made by either, that was not expressed this agreement.

Singer then proceeded to negotiate for the acqui-on of the foreign patents and patent application esponding to the United States Messerschmitt ap-ation. In exchange for these, Singer was willing rosecute these applications, pay the cost of obtain-the patents which had issued to date and the y fees for their maintenance and grant to Mes-hmitt a license under each patent. Since Singer dy had some twenty foreign patent rights con-ning the Perla and "319" multicam zigzag mecha-sm, it was Singer's purpose to consolidate all these tents (its own twenty and Messerschmitt's ten pat-s covering multicam zigzag mechanism) in its nds in order that it might more diligently police and force the patents and protect the "319" machine. hough the expense of the acquisition of these was and although Singer was licensed to sell in all se countries, it was thought worthwhile "if of any ue to restrict Japanese especially Brother."

The proposal was first made in July 1957. Later, in tober 1957 a draft agreement covering ten of Mes-schmitt's foreign applications had been drawn up Singer and submitted to Messerschmitt for ap-val. The patent applications which Messerschmitt thought willing to assign included, among the zig-mechanism, claims covering "certain reverse feed-

ing means in connection with some other mechanisms of an automatic camblock machine". The claims would be the first of this kind to be owned by Singer; they would constitute a worthwhile supplement to Singer's "automatic zigzag machine patents" even though they were considered as "not fundamental", except to the particular mechanism of the Messerschmitt style machine.

Although Singer was willing to pay for these patents, Messerschmitt was interposing stumbleblocks. During these negotiations, Messerschmitt had proposed that it be given an exclusive license with the right to sublicense with specific territories allotted among such sublicensees. This proposal of Messerschmitt was "pushed aside very quickly" by Waterman of Singer on the ground that it was "under no circumstance acceptable, because this wording would mean a clear infringement of the antitrust law in the United States of America". In retort to the suggestion that such agreement be understood though not expressed, Waterman pointedly refused on the ground that the agreement must be complete and entirely truthful in all respects and that, if it were not, he would "not be able to declare with a good conscience that no additional arrangements had been made."

A flat price of $25,000 was suggested for all the patents and patent applications with an option to Singer to purchase the whole Messerschmitt sewing machine business. Messerschmitt was thinking of selling this for it had not been profitable, and as its anxiety grew Messerschmitt became more reluctant to part with its patents unless Singer also agreed to buy the business. This, Singer was not prepared to do, even though Singer saw no harm in having an option to do so, and in fact, saw some possible good in this, since it would

then know something of business conditions at Messerschmitt.

Singer went so far as to tell Messerschmitt that it really did not need Messerschmitt's foreign patents for any new machine in construction or being designed, but that it was interested in acquiring them merely to supplement its own similar patents. Singer renewed its offer of $25,000 and in addition offered to accept Messerschmitt's proposal that in the event of purchase, consent be given to the granting of a license to a possible purchaser of Messerschmitt's business. This was to no avail; Singer never obtained Messerschmitt's foreign patent rights or application corresponding to United States patent application No. 548,481.

The Government makes much of the fact that the Messerschmitt United States application contained the feed mechanism not embodied in the "319" or any other Singer machine, and contends that Singer's efforts to obtain it despite this fact is evidence of Singer's intent to acquire as many patents as necessary, whether essential to its business or not, to frighten off competition. However, the fact remains and it cannot be disputed that this application embodied the zigzag mechanism of the "319" which issued on the Perla patent and on which Singer had spent considerable time and money. It is also the fact that it was one patent with these two features—one of which Singer needed and one of which it did not need for its "319" but would be happy to get.

Because Singer had been "behind the procession" of industry development and production in the zigzag field and had been anticipated on so many occasions, Singer had decided that good business policy dictated that it pass up no lawful opportunity to keep up with the latest developments. As Singer correctly

summed it up when it negotiated the Messerschmitt license, Singer was behind in the zigzag field and Singer was "skating on some pretty thin ice" commercially in its offerings in the market place.

The automatic feed mechanism, Singer had been advised, had good selling points and was attractive to a user. While Singer was not manufacturing such a machine at the time or contemplating doing so, it wanted to acquire the feed mechanism in the event it should decide to do so in the future.

In 1960, Singer did pay Vigorelli $25,000 for a license on a machine incorporating an automatic feed mechanism.

The fact that at the very same time Singer was negotiating for Gegauf's United States application concerning its "401," while interesting, is not significant or indicative of wrongdoing. There is not a scintilla of evidence that either Gegaulf or Messerschmitt knew of each other's contemporaneous dealings with Singer. At no time in the dealings between Messerschmitt and Singer was that fact mentioned. The negotiations with Messerschmitt straddled a period commencing prior to its license with Vigorelli and terminating after the assignment of Gegauf I, but nowhere does it appear that Vigorelli or Gegauf played any part in Singer's dealings with Messerschmitt.

2. The further effectuation of the alleged conspiracy

As further proof of the alleged conspiracy, the Government points to the license given by Singer to Sears Roebuck Company under the Gegauf patent, the institution of Tariff Commission proceedings, and the filing of infringement suits by Singer against Japanese imports. The fact that Singer licensed

Sears Roebuck Company, and the license itself shows, the Government contends, that the conspiracy was directed solely against Japanese imports because Singer thereby was free and willing to license European imports without consulting Gegauf or Vigorelli but unwilling to license Japanese imports.

The Sears Roebuck license came about from these facts: Sears Roebuck was desirous of importing a West German machine—"Sears Roebuck Model 89"—which it feared might infringe on the Singer Gegauf patents. Singer did not feel that this Sears "Model 89" would infringe any patent which might issue under the Gegauf divisional application, and in fact it so informed Sears Roebuck. It was Sears Roebuck who insisted upon being licensed under both Gegauf patents.

While it was not Singer's policy to license a competitor under a patent, because Sears was a good customer of one of Singer's subsidiaries, Singer "felt constrained to acquiesce to a limited extent in the request for a license" even at a time when such a license might jeopardize its success in the Tariff Commission proceedings.

Under the license executed on January 19, 1959, Singer granted Sears Roebuck Company a non-exclusive, non-transferable license to import and sell throughout the United States machines illustrated therein known as "Sears Model 89", which was covered by Gegauf I and which might be contended was covered by Gegauf II. In exchange for this, Singer received from Sears Roebuck a royalty on each machine to be calculated at the option of Sears under either a minimum total of $75,000 per year or a fixed price of $7.50 on each machine sold. In 1959 Singer received in royalties from Sears Roebuck a total of $116,895 and in 1960, $75,435. In 1961 Sears Roebuck

discontinued the importation and sale of any machine covered by Gegauf I and replaced its imports with a zigzag machine of Japanese manufacture.

The fact that in two years Singer received almost twice as much from the Sears Roebuck license as Gegauf collected for the sale of its patent to Singer does not buttress the conclusion drawn by the Government that Gegauf was willing to part with a valuable property right at a low price in exchange for action by Singer against their common competitors. No part of the money which Singer was paid by Sears Roebuck was ever shared with or paid to Gegauf. In fact, Gegauf did not even learn of the license until after its execution. When extending the license, Singer was acting independently and solely in its own business interest of keeping an important customer.

On January 15, 1959 Singer filed a complaint before the United States Tariff Commission alleging it was the owner of Gegauf Patent No. 2,832,302. The complaint prayed that the Tariff Commission recommended to the President that household automatic zigzag sewing machines and parts thereof covered by the claims of said United States Patent No. 2,832,302 be excluded from entry into the United States for the term of said patent. This led to the Tariff Commission investigation which is still pending. The proceeding before the Tariff Commission was stayed by the Commission upon the commencement of this suit by the Government against Singer and is being held in abeyance by it awaiting the outcome of this suit.

This filing with the Tariff Commission was after the acquisition of the Gegauf patent. It was followed and was the result of a discussion which Singer had with its patent counsel and with an attorney expert in tariff matters, concerning the inadequacy of infringement suits to protect its "401" machine. Be-

fore the filing, Singer did not consult with Gegauf or Vigorelli about taking this step. There is no evidence that Singer ever discussed such a step with either Gegauf or Vigorelli during any of its negotiations with them.

From the complaint before the Tariff Commission, it is clear that those proceedings were brought solely to exclude all imports which might infringe Gegauf I, as embodied in the Singer "401," which Singer was manufacturing and selling in great volume. Neither Gegauf patent II nor the Harris patent is involved in the Tariff Commission proceedings.

Numerous defendants were named by Singer in its complaint before the Tariff Commission as importers of infringing machines.

Husqvarna, a Swedish manufacturer of household sewing machines with whom Singer had had business relations for over a century, was one of the named defendants. Because of its long acquaintance and its desire to secure a license from Singer under the Gegauf patent, Husqvarna was reluctant to oppose Singer in the proceedings and instead proposed a "gentleman's agreement" that if it did not oppose Singer in the proceedings, Singer would at the conclusion of the proceedings grant it a license. Singer declined the proposal. Singer stated that it could not consult with Husqvarna as to what course it should take and that it was not free to enter into any such agreement, but Singer did state that it did not intend to offer any proof respecting Husqvarna's infringement unless the latter did. The net result of the request of Husqvarna was a tactful refusal by Singer, with the perfectly lawful and understandable reluctance not to alienate a prospective customer with whom Singer had long had business dealings. Husqvarna remains in the tariff proceedings as an alleged in-

fringer; no license has been granted to it. The fact that Singer did not intend to offer proof as to Husqvarna's infringing machine is of no particular or special importance since Husqvarna is but one of 28 manufacturers named in the proceedings. Husqvarna imports amount only to 3,000 machines a year!

Another importer named as a defendant was Phoenix, a West German manufacturer of household machines. Phoenix wrote to Singer denying any infringement on the ground that it had a prior license from Gegauf (a defense which it has not raised before the Tariff Commission). Phoenix suggested a settlement with Singer. Although Singer doubted this license since Gegauf had never mentioned Phoenix, Singer felt it was not then in any position to discuss the question of a license, or become involved in a controversy over the matter of the claimed license, and so informed Phoenix. From this, the Government draws the inference and conclusion that Singer was leaving itself open to license Europeans in the future once it had disposed of the Japanese infringers. Here again, however, there is a lawful inference which can be drawn—that is not to antagonize an adversary and possibly a prospective customer.

Finally, there is the matter which arises from the deletion from the assignment agreement of Pfaff as a European importer against whom Singer could not assert its patent without the consent of Gegauf. While Singer in its complaint before the Tariff Commission had alleged the existing licenses with Gegauf, Vigorelli and the proposed license to Sears Roebuck Company, it had not alleged the agreement with Gegauf with respect to Pfaff. During the hearing before the Commision, Singer was asked whether Pfaff was licensed under the Gegauf I patent to which Singer replied in the negative. Singer felt

that the Commission was not convinced of the truth of this and therefore requested Gegauf to execute a revised agreement deleting Pfaff's name and all reference to Pfaff. The sole motive and reason prompting this deletion was very plainly and unequivocally expressed by Singer; it was that Singer might "have a better chance of prevailing before the Tariff Commission" in its efforts to exclude all machines which infringed on Gegauf I. Gegauf consented on condition that the name of Phoenix be substituted for Pfaff. Gegauf explained that prior to the 1957 assignment to Singer, it had in 1955 licensed Phoenix under its German patent for the area of West Germany and that, although Gegauf did not believe that Phoenix had any right under Gegauf I in the United States, it was worried that Phoenix might seek damages against Gegauf for not reserving rights to it under the Gegauf patent in the United States. However, Gegauf offered, in the event that this arrangement was not satisfactory, to consent to the deletion on the explicit condition that Singer assume all legal consequences and to that extent protect Gegauf.

While Gegauf was willing to help Singer, it was only willing to do so if the assistance involved no risk to itself.

Following on the heels of the Phoenix letter claiming a license under the patent, Gegauf's statement confirming the existence of some sort of license came as an unpleasant surprise to Singer. Although, like Gegauf, Singer did not interpret the license to Phoenix as extending outside of West Germany, Singer was annoyed that Gegauf had not, as required by paragraph 6 of their assignment agreement disclosed its existence to Singer—particularly in view of the fact that this provision had been inserted in the agreement at Gegauf's suggestion. Here, certainly, was

further evidence of the arm's length dealing which had characterized all Singer's dealings with Gegauf.

Much as Singer disliked Gegauf's attitude, it needed Gegauf's assistance in the Tariff Commission proceedings and in order to get it, Singer had to submit to the condition imposed. Thereupon, on July 14, 1959, Singer executed an indemnity agreement in protecting Gegauf against damage it might sustain from any claim of Phoenix. The revised agreement was signed by Gegauf on July 22, 1959. On the same day, Gegauf executed an affidavit stating that the reason it had requested a provision in the 1957 assignment that Singer not assert its patent against Pfaff without Gegauf's consent was the existence of a personal friendship with Pfaff's directors, and that it had not before nor since licensed or extended any rights to Pfaff under either Gegauf patent.

We are not at all concerned here with Gegauf's purpose [illegible]tent. It was Singer who was a plaintiff before [illegible] Commission. While Singer was technically correct in saying that Pfaff was not licensed by it under Gegauf, and while it appears that Gegauf never did extend any right to Pfaff under Gegauf I, the effect of the 1957 agreement was to permit Gegauf to give Pfaff a sublicense should it choose to do so.

The fact that no license was ever given to Pfaff bears on the truth of Singer's statement to the Commission that Pfaff had no license under Gegauf I—the only patent with which the Commission was concerned.

We find that the Tariff Commission proceedings were brought by Singer in a bona fide attempt to obtain protection for its "401" machine by an order excluding *all* unlicensed machines which infringed on Gegauf I patent. That these proceedings were motivated by the deluge of infringing Japanese imports and that Singer's energies were primarily directed

to excluding these imports is not evidence of any unlawful conspiracy to exclude the Japanese and open the way for the European imports. The principal threat to the Singer machine came from the Japanese imports not from European production, but Singer sought to bar all infringing machines. Nor do we find any evidence whatsoever in this tariff proceeding of an intent or attempt to monopolize the United States household automatic zigzag sewing machine industry. As a patent owner whose patent was being infringed by imports, Singer had every right to resort to the Commission.

There were four law suits filed by Singer following the acquisition of the Gegauf patents. Two of these suits were filed by Singer against Brother, the importer and distributor of sewing machines manufactured in Japan whom we have mentioned before, for alleged infringement of the Gegauf, Harris reissue and Johnson patents based on the sale of Japanese Nippon machine carried multicam zigzag machines (Selec-o-matic 100 and Pacesetter 200). The defendant Brother has pleaded nonvalidity, and the actions are presently pending. A suit has also been filed against Sewing Machine Exchange, alleging infringement of Gegauf and Harris patents based on the sale of Japanese Sanshin machine carried multicam zigzag machines (Universal). The fourth suit was filed against ACO alleging infringement of Gegauf, Harris and Johnson patents based on the sale of a Japanese Sanshin machine carried multicam zigzag machine (Fleetwood). The latter two suits terminated in a consent judgment enjoining defendants from selling any machine embodying the inventions in said patents.

It does not appear that Singer has filed any infringement suits on any patent which did not cover

an article being manufactured or sold by it. The fact that it has instituted action on the Gegauf patent, thus placing squarely in issue its validity, as well as the validity of its other patents, belies any intent on its part to acquire broad patent protection regardless of validity.

G. ALLEGED PER SE ILLEGALITY OF THE SINGER-GEGAUF AGREEMENTS

It is the Government's contention that aside from the unlawfulness of the Singer-Gegauf agreements as part of the alleged conspiracy, the license agreement is *per se* illegal under Sections 1 and 2 of the Sherman Act, by reason of the provision under which each party agreed not to do anything directly or indirectly to restrict the other's claims in the respective patent applications, and the assignment agreement by reason of the provision restricting Singer's right to assert the Gegauf patent against Vigorelli and Pfaff without Gegauf's consent.

We have already discussed the first of the provisions and have found nothing unlawful in it. No authority has been cited by the Government to support its contention of *per se* illegality. In spite of the sinister inference which the Government attempts to draw from this first provision, it does not contend that either Singer or Gegauf was under any "affirmative duty or obligation to seek to narrow or hold unpatentable claims which are in interference", but that conversely each was prohibited from agreeing with the other not to do that which it was under no legal duty to do.

We have found that there is nothing illegal in two parties agreeing not to oppose each other's claims, especially when these claims are not invalid and form the subject matter of an agreement between the parties. But even assuming, for the sake of discussion,

that such provisions were illegal, no acts were done pursuant to this agreement and the claim of Gegauf I was concededly valid (Cf. *U.S.* v. *National Lead Co.*, 63 F. Supp. 513, affd. 332 U.S. 319; *United States* v. *Standard Oil Co.*, 33 F. 2d 617).

The Government concedes that it has found no authority in support of its charge of illegality and it would be astounding if it had.

Recognizing the weakness of the charge standing alone, the Government relates this provision to an alleged underlying agreement or alleged conspiracy to "pool patents" in Singer and to establish "broad patent monopolies" in both conspirators in order to exclude Japanese competition. The plain answer to this is that we have found that there was absolutely no agreement or conspiracy.

As for the second provision, the Government says it is a *per se* violation of the anti-trust laws in that it has been held that a patentee and his licensee may not jointly determine between themselves the parties to be licensed or sued. *United States* v. *Besser*, 96 F. Supp. 304, affd. 343 U.S. 444; *United States* v. *Krasnov*, 143 F. Supp. 184; *Mason City Tent & Awning Co.* v. *Clapper*, 144 F. Supp. 754. We believe that the contention of *per se* illegality was apparently abandoned during the trial; the Government however does attempt to relate it to the overall conspiracy.

The defendant's answer is that this provision is not an agreement calling for joint decision as to who should be licensed or sued but is, in effect, a grant to Gegauf of the right to sublicense Pfaff or Vigorelli—Gegauf granting the license by independently refusing to give assent to an infringement suit by Singer against the latter. The provision now has no special significance when weighed with all the evidence; it was expunged from the assignment, prior to the filing of

the suit, at Singer's request. Of course, the mere fact of deletion, if the provision were in fact illegal, would not remove it from our consideration, for its existence might be some evidence tending to point to an illegal purpose or understanding to "pool" patents in the hands of Singer. Although it might be argued that the effect of the provision in question is as if Gegauf had been given the right to sublicense Pfaff or Vigorelli, that is not its language and the only question is whether the restriction could constitute a *per se* violation of the Sherman Act.[1]

An examination of the patent anti-trust cases, dealing with restrictions other than price fixing, shows that rarely is a single restriction involved. Thus, while the Court has clearly condemned a restriction requiring the consent of the non-exclusive licensee before the patentee may grant a license to another (*United States v. Besser Mfg. Co., supra*), a restriction, as here, requiring joint approval of the patentee and the non-exclusive licensee before an infringement suit can be brought, has been condemned only as a part of a host of abuses, the total of which were found to be in violation of the Sherman Act. *Mason City* v. *Clapper, supra; United States* v. *Krasnov, supra.*

This is not a situation where restrictions were imposed upon a patent holder as to whom it might license. In the first place, Singer was free to license its patent to as many or as few as it chose, and Gegauf

[1] It should be noted that it was of no practical significance with respect to Vigorelli since Singer by the cross-license agreement of November 17, 1955 had already licensed Vigorelli to sell its multicam machine in the United States and, therefore, could not bring any infringement action against Vigorelli in any event. Thus, properly interpreted, this provision restricted Singer's freedom to enforce the Gegauf patents only with respect to Pfaff.

othing to say about it. In the second place, al-
gh the necessity to obtain the consent of Gegauf
re Singer could sue Pfaff for infringement might
st appear to come within the prohibition of *Ma-*
ity and *Krasnov* it is distinguishable on several
ds. This was the only restriction on Singer's
ship; it was limited to one specific company; it
conditional and future restriction which might
come to pass and which in fact did not; and
there was nothing to prevent or stop Singer
ermitting any other number of importers to
te with Pfaff, either by the express grant of a
e or by non-assertion of its patent.

eover, since Singer did not intend to license
under its patent, the exercise of the restriction
serve to promote rather than restrict competi-
n that Gegauf, by bringing its veto power to
could enable Pfaff and Vigorelli to continue to
ete with Singer and with Gegauf itself. If, on the
r hand it be viewed as an unlawful restraint in
such a provision gave Gegauf by agreement the
er to prefer one competitor over another, by per-
ing Pfaff to import free of threat of infringe-
t, the matter has become academic by reason of the
that it has been deleted from the agreement.

side from this there was no other understanding
greement with respect to licensing or enforcing by
ingement action or otherwise, any patent, then
ned or subsequently acquired, or with respect to
use in any way of any such patent, alone or in
junction with any other patent. The written
reement expressed the complete agreement and un-
standing of the parties and we conclude that it
ntained nothing illegal.

H. THE ALLEGED ATTEMPT TO MONOPOLIZE

With respect to the monopoly charge, the Government's theory is:

1) that there was a conspiracy to achieve for Singer a monopoly in the sale and distribution of automatic zigzag sewing machines by the exclusion from the United States of all such machines of Japanese origin;

2) that Singer by itself sought to achieve such a monopoly by excluding all such machines regardless of origin and by preventing their domestic manufacture, thereby entrenching itself as the sole source of supply;

3) that even if the alleged conspirators' conduct does not establish a conspiracy in restraint of trade under Section 1, it does establish a conspiracy to monopolize; and

4) that even if no conspiracy to either restrict or monopolize is found, Singer's acts establish an attempt on its part to monopolize.

The same conduct is relied upon to establish the conspiracy and attempt to monopolize as was relied upon to establish the conspiracy to restrain trade.

Our finding that there was no conspiracy among Singer, Gegauf and Vigorelli to do anything disposes of the charge that there was a conspiracy to monopolize for Singer.

And now, we turn to consider the allegation that there was an attempt to monopolize. Under Section 2 an attempt to monopolize has been made a violation separate and distinct from a conspiracy to restrain trade or to monopolize. A finding, therefore, that certain conduct does not constitute a violation of Section 1 or a conspiracy to violate Sections 1 or 2, does not necessarily preclude a finding that the same conduct is an attempt to violate Section 2, provided it is accompanied by a specific subjective intent to achieve a mo-

nopoly. *United States* v. *Columbia Steel Co.*, 334 U.S. 495, 531; *Swift* v. *United States*, 196 U.S. 375, 396.

Our conclusion, therefore, that in acquiring the Gegauf and Messerschmitt applications Singer was motivated by entirely lawful and "sound business reasons" is not dispositive of the charge that in doing so it was engaged in an attempt to monopolize the household automatic zigzag sewing machine industry in the United States. *United States* v. *Columbia Steel Co., supra*, at p. 518.

It is the Government's contention that the purpose of Singer in acquiring the Gegauf and Messerschmitt patent applications was to be in a position to prevent the importation and sale of Japanese made machines which, because of their lower price were in substantial competition with Singer and prevent the manufacture of these machines in the United States.

The Government argues that this purpose was clearly manifested by (1) the refusal of Singer to license under its patents; (2) the filing of infringement suits and Tariff Commission proceedings against competitors; and (3) Singer's own words that it wanted to get the very best patents "to bar imports or United States production of mechanisms which would violate these patents" and that the acquisition of Messerschmitt's foreign application would be "very much worthwhile . . . if of any value to restrict Japanese especially Brother."

Certainly, the very limited acquisition of Singer (two patent applications) cannot even be discussed in the same context with the acquisitions condemned in *United States* v. *United Shoe*, 110 F. Supp. 295, affd. p.c. 347 U.S. 521, which the Government cites in support of its charge. The fact that Singer was most reluctant to license under its patents and did

so to Pfaff only under protest, does not add a whit to establishing an unlawful intent. The same observation may be made of the fact that Singer did license Sears Roebuck under its Gegauf patent thereby permitting the importation into the United States of 20,000 zigzag sewing machines. This, as well as the filing of infringement suits and the Tariff Commission proceedings, was its prerogative as a patent owner. We have been cited to no case which imposes a duty on the owner of a patent to license others or suffer infringement of its patent in order to escape a charge of intent to monopolize. The exclusion of competition through patent ownership is the lawful result of the monopoly which the law grants to a patent owner.

Singer's refusal to grant licenses to competitors and its attempt to eliminate infringers, leaving as competitors all manner of sewing machines with devices capable of doing the same thing over which Singer had no control, indicates no intent nor attempt to achieve an illegal monopoly. *United States* v. *General Electric*, 80 F. Supp. 989; *Cole* v. *Hughes Tool Co.*, 215 F. 2d 924, *cert. den.* 348 U.S. 927; *Dollac Corp.* v. *Margon Corp.*, 164 F. Supp. 41. These were acts which were perfectly consistent with a lawful intent and purpose to protect its patents and machines.

It is, therefore, unnecessary to consider at length Singer's power to achieve a monopoly in the relevant market as bearing on its intent. If it were necessary to our decision, we would find the relevant market to be automatic zigzag sewing machines of four types: machine carried multicam zigzag, replaceable cam, manually operated and the straight stitch sewing machine with zigzag attachment. These four machines, we find, are sufficiently unique to constitute

a separate market within which these machines are reasonably interchangeable for the use to which they are put. *United States* v. *Du Pont,* 351 U.S. 377, 395, 396. Within the market as defined the evidence clearly establishes that Singer did not have the power to achieve a monopoly; this lack of power further evidences absence of a specific intent on Singer's part to achieve a monopoly. *U.S.* v. *Columbia Steel, supra.*

The Government has failed on all evidence to support its charge that Singer attempted to monopolize as it has failed to support any and all of the unlawful acts charged against Singer in the complaint. *United States* v. *Yellow Cab,* 332 U.S. 218, 225.

III. CONCLUSIONS OF LAW

We conclude therefore that:

1. This Court has jurisdiction over the defendant and the subject matter of this suit.

2. Defendant did not conspire with the alleged co-conspirators to unreasonably restrain interstate and foreign commerce in violation of Section 1 of the Act.

3. Defendant did not conspire with the alleged co-conspirators to monopolize nor attempt by itself to monopolize interstate and foreign commerce in violation of Section 2 of the Act.

The Clerk is directed to enter judgment dismissing the complaint herein on the merits.

SYLVESTER J. RYAN
Chief Judge

MAY 11TH, 1962.

UNITED STATES DISTRICT COURT

SOUTHERN DISTRICT OF NEW YORK

Civil 154–108

UNITED STATES OF AMERICA, PLAINTIFF

v.

THE SINGER MANUFACTURING COMPANY, DEFENDANT

The above-entitled action having come on for trial before the Honorable Sylvester J. Ryan without a jury (both sides being represented by counsel) on May 2, 3, 4, 9, 10, 11, 15, 16, 18, 19, 22, 23, June 1, 2, 5, 6, 12, 19, 20, 21, 22, 26 and 27, 1961; and the court, in an amended and corrected opinion dated and filed May 11, 1962, having directed the Clerk to enter judgment dismissing the complaint herein on the merits; it is

ADJUDGED: The defendant THE SINGER MANUFACTURING COMPANY have judgment against the plaintiff UNITED STATES OF AMERICA *nunc pro tunc* as of May 11, 1962.

Dated: New York, N.Y., May 17, 1962.

/s/ HERBERT A. CHARLSON,
Clerk

APPROVED: May 17, 1962.

/s/ SYLVESTER J. RYAN,
Chief Judge

U.S. GOVERNMENT PRINTING OFFICE: 1962

Office-Supreme Court, U.S
FILED
OCT 18 1962
JOHN F. DAVIS, CLERK

IN THE

Supreme Court of the United States

OCTOBER TERM, 1962

No. 438

UNITED STATES OF AMERICA,
Plaintiff-Appellant,

v.

THE SINGER MANUFACTURING COMPANY,
Defendant-Appellee.

MOTION OF THE SINGER MANUFACTURING COMPANY, DEFENDANT-APPELLEE, TO AFFIRM THE JUDGMENT OF THE UNITED STATES DISTRICT COURT FOR THE SOUTHERN DISTRICT OF NEW YORK.

WINTHROP, STIMSON, PUTNAM & ROBERTS,
40 Wall Street,
New York 5, New York,
Attorneys for The Singer Manufacturing Company, Defendant-Appellee.

ARTHUR E. PETTIT,
EDWIN J. WESELY,
EDWARD A. MILLER,
Of Counsel.

INDEX

	PAGE
Pendency of Tariff Commission Proceeding	1
The questions presented by the Government are not substantial. While the Government asserts that its questions are based on "undisputed" pertinent facts, the questions, without exception, are predicated upon facts squarely in conflict with the trial court's findings of fact and present for review substantially all of the trial court's findings and all of the underlying facts upon which they were based. Upon the basis of the facts as they exist and as found by the trial court no issue of law exists	3
Statement of Facts Set Forth in Appendix A	6
Question 1 is Unsubstantial	7
Question 2 is Unsubstantial	20
Question 3 is Unsubstantial	30
Conclusion	44
Appendix:	
A—Facts	1a
Conception, Invention and Development of Singer 401 Machine	1a
Conception, Invention and Development by Singer of Other Zigzag Machines	2a
Singer-Vigorelli License Agreement	3a
Singer-Gegauf License Agreement	5a
Singer-Gegauf Assignment	8a
Actions and proceedings brought by Singer have been directed to the stopping of the sale of machines infringing Gegauf Patent No. 1	17a

PAGE

B—Colloquies Between Government Counsel and the Trial Court in which Government Counsel Stated that the Alleged Conspiracy Related Solely to the Exclusion of Japanese Machines and that the Exclusion of European Importations was Not Part of Such Conspiracy 19a

C—Various types of Multiple-Cam Mechanisms Which Do not Infringe Gegauf Patent No. 1 and Examples of Machines Incorporating such non-Infringing Multiple-Cam Mechanisms 24a

D—Singer-Gegauf License Agreement 32a

E—Chart setting forth relevant provisions of the Singer-Vigorelli, Singer-Gegauf and Singer-Messerschmitt license agreements 37a

Citations

Cases

Great Northern Railway Company v. *Delmar Company*, 283 U. S. 686 (1931) 36

United States v. *Real Estate Boards*, 339 U. S. 485 (1950) 19

United States v. *Yellow Cab Company*, 338 U. S. 338 (1949) 6, 19-20

Statutes

Sherman Act:

Section 1, 15 U.S.C. §1, 26 Stat. 209 (1890) 4, 8

Section 2, 15 U.S.C. §2, 26 Stat. 209 (1890) 8

19 U.S.C. §1337, 46 Stat. 703 (1930) 2

Miscellaneous

17 C.J.S. *Contracts* §318 (1939) 36

3 Corbin, *Contracts* §546 (1960) 36

4 Williston, *Contracts* §620 (3d ed. 1961) 36

IN THE

Supreme Court of the United States

OCTOBER TERM, 1962

No. 438

UNITED STATES OF AMERICA,
Plaintiff-Appellant,

v.

THE SINGER MANUFACTURING COMPANY,
Defendant-Appellee.

MOTION TO AFFIRM

Defendant-Appellee ("Singer"), pursuant to Rule 16 of the Revised Rules of the Supreme Court of the United States, moves that the judgment of the United States District Court for the Southern District of New York, entered in this suit as of May 11, 1962, be affirmed on the ground that it is manifest that the questions set forth in the Government's Jurisdictional Statement are so unsubstantial as not to need further argument.

Pendency of Tariff Commission Proceeding

We are impelled to make this motion because the pendency of this action is doing the defendant irrevocable injury every day it remains undecided. We believe this to be a significant fact which may affect this Court's deter-

nination as to whether this appeal should be summarily decided.

On January 15, 1959 Singer filed a complaint before the United States Tariff Commission which alleged that certain sewing machine manufacturers and distributors were engaging in unfair competition against Singer, under the circumstances set forth in such complaint, by selling machines infringing Singer's Gegauf Patent No. 1. The complaint prayed that the Tariff Commission recommend to the President of the United States that sewing machines infringing Gegauf Patent No. 1 be excluded from entry into the United States (Op. 69a; Dx. S-11, R. 2479-2501).[1]

Singer's sole basis for such relief is that the unfair methods of competition referred to have the effect or tendency "to destroy or substantially injure an industry, efficiently and economically operated in the United States" (19 U.S.C. §1337). The Commission had completed its investigation and was preparing to render its decision when this action was commenced (Dx. 54, R. 5283). Upon the commencement of this action the Tariff Commission stayed all further proceedings to await the outcome of this action (Op. 69a). After judgment was entered herein by the District Court the Commission denied Singer's request that it proceed, declining to take further

[1] The following abbreviations are used in this motion:

Def. App. —Defendant's Appendix to this motion.
Dx. —Defendant's Exhibit.
Gx. —Government's Exhibit.
J.S. —Government's Jurisdictional Statement.
Op. —The opinion of the trial court printed as an Appendix to the Government's Jurisdictional Statement.
R. —Record on Appeal.

action until the decision in this suit has become final. In the meantime the unfair competition continues and the life of Gegauf Patent No. 1 is diminished with each passing day.

We believe that in defendant's position, this motion should be made although to demonstrate that each of the questions presented by the Government is unsubstantial requires more extensive presentation of facts and argument, and thus a longer motion than is normally considered desirable.

The questions presented by the Government are not substantial. While the Government asserts that its questions are based on "undisputed" pertinent facts, the questions, without exception, are predicated upon facts squarely in conflict with the trial court's findings of fact and present for review substantially all of the trial court's findings and all of the underlying facts upon which they were based. Upon the basis of the facts as they exist and as found by the trial court no issue of law exists.

The Government presents three questions (J.S. 2-3). Without exception each question is predicated upon a state of facts squarely in conflict with the facts found by the trial court. If the facts found by the trial court were substituted for those relied on by the Government there would not in any instance be an arguable question. Not only in the questions it presents, but throughout its Jurisdictional Statement, the Government sets forth as facts matters which were sharply disputed by the defendant and which are directly contrary to testimony and other evidence and contrary to facts found by the trial court. Thus the Government, although purportedly accepting

the facts found by the trial court (J.S. 4, 19, 20, 21), in fact seeks a plenary review by this Court of substantially all facts found against the Government by the trial court.[2]

This case involved, and now involves, no question of law of substance, much less any important principle. It was determined and must be determined solely upon facts. With two exceptions only, there is not a principle of law set forth in the Government's Jurisdictional Statement on which the trial court ruled contrary to the Government's contention with respect thereto.[3] The Government's contention with respect to the two principles of law it erroneously asserts were lost on the facts before the principles were reached. The trouble with the Government's principles of law is that they have no application to the facts as they exist and as they were found by the trial court.

Inasmuch as the Government is seeking a reversal of findings of fact made by the trial court, we wish to point out that the judge who tried this case was responsible for all pre-trial motions and other matters and held 16 pre-trial hearings (R. 3267; Op. 1a), this without reference to pre-trial hearings held subsequent to February 17, 1961, the date of the order reflecting such 16 pre-trial hearings. The trial was held on 22 days. The trial

---

[2] By footnote 20 (J.S. 24) the Government does ultimately concede that it is challenging one finding of fact.

[3] The Government erroneously asserts that (1) the relevant market has no application in an attempt to monopolize charge (J.S. 22) and (2) all agreements between competing manufacturers to preclude a contest in pending and future proceedings before the Patent Office violate the patent laws and Section 1 of the Sherman Act (J.S. 25).

hearings cover 2,328 pages of the Record and 412 exhibits were introduced in evidence. Almost all documentary exhibits were introduced at the beginning of the trial and counsel for the respective parties argued the meaning and significance of each such exhibit for nine days. Each such exhibit had previously been marked in red and blue by the respective counsel to show the portions thereof which they deemed significant. No facet of any such exhibit, no possible meaning and no possible significance was left unstated, at least to the limit of counsel's ability to conceive of them. Approximately 1,000 pages of the transcript of the hearing covered discussion and argument relating to such written documents (R. 181-1013a) and thereafter testimony was received at the trial to resolve ambiguities in documents.

The defendant called 12 witnesses, including the head of Singer's Patent Department and its principal negotiator at the various conferences with Gegauf and Vigorelli (Stanford, R. 1022-1032). The Government did not permit a witness to leave the witness stand without being cross-examined. The Government called 4 witnesses.

The trial court had the benefit of proposed findings of fact, both from the Government and from the defendant, which covered every fact with respect to which there could have been any possible dispute between the parties, not to mention facts as to which there was no dispute (R. 5803-5976; R. 6114-6193). These proposed findings were detailed and contained specific references to evidence supporting the proposed findings. They covered in the case of the defendant alone 153 legalcap pages encompassing 322 proposed findings.

We doubt that there has been a case where a trial judge gave more careful consideration to all of the evi-

dence in a case, including all of the written exhibits, than was given in this case. Yet the Government here asks this Court to reverse almost all findings of fact of an experienced and able trial judge which are contrary to the Government's contentions. The following statement of this Court is as applicable to the Government's appeal in this case as it was to the Government's appeal in *United States* v. *Yellow Cab Company*, 338 U. S. 338, 340, 341 (1949):

> "What the Government asks, in effect, is that we try the case *de novo* on the record, reject nearly all of the findings of the trial court, and substitute contrary findings of our own.
>
> * * * * * * *
>
> "* * * The judgment below is supported by an opinion, prepared with obvious care, which analyzes the evidence and shows the reasons for the findings. To us it appears to represent the considered judgment of an able trial judge, after patient hearing, that the Government's evidence fell short of its allegations—a not uncommon form of litigation casualty, from which the Government is no more immune than others."

Statement of Facts Set Forth in Appendix A

The Government has attempted to draw a picture of the attitude, motive, purpose and intent of Singer and Gegauf by use of quotations of isolated sentences, half-sentences and words from various bits and pieces of evidence and the trial court's findings, out of context and without reference to the surrounding circumstances or other evidence. From these the Government wishes this Court to draw inferences as to the attitude, motive, purpose and intent of Singer and Gegauf with respect to

actions and activities occurring over a period of approximately three years, which are at variance with and contradictory to the facts as they exist and the findings of fact made by the trial court. The true picture of the attitude, motive, purpose and intent of parties engaged in business transactions over a period of years is not established by such heavy-handed technique. We accordingly set forth a statement of the facts in Appendix A hereto, pages 1a to 18a, a reading of which we believe will demonstrate the magnitude of the factual review sought and the full extent to which the Government seeks a reversal of findings of fact made by the trial court and, at the same time, will be helpful to a clearer understanding of matters set forth in our discussion of the three questions presented by the Government.

Question 1 is Unsubstantial.

The first question presented by the Government (J. S. 2) as amplified, explained and argued in its Jurisdictional Statement is predicated upon the existence of a contract, combination or conspiracy between Gegauf and Singer to have Gegauf transfer to Singer certain patents relating to a sewing machine multiple cant mechanism for the purpose of using such patents, in conjunction with Singer's three patents, to exclude Japanese and other imported sewing machines containing a mechanism of the type covered by such patents.

The Government in this first question asks whether Singer and Gegauf *by combining* in defendant's hands *patents of a certain type* of sewing machine, for the purpose of excluding from the United States Japanese and *other imported* sewing machines *of that type more effec-*

tively than either party could by independent action, violated Sections 1 and 2 of the Sherman Act.

Every vital fact assumption contained in the question is contrary to the facts as they exist and as they were found by the trial court:

(1) There was no "combination" or "combining" other than results from the purchase and sale of a patent application. The trial court found that the Singer-Gegauf license agreement and the Singer-Gegauf assignment agreement constituted the entire agreement and understanding between the parties and that, other than as set forth therein, no agreement was made or understanding reached by the parties with respect to the licensing, enforcing or use of their patents (Op. 39a, 52a).

(2) The Government's question makes the factual assumption that Singer and Gegauf, by "combining" certain patents in Singer's hands, sought an additional exclusory power from an aggregation of the patents issuing on Gegauf's United States applications and the three Singer patents, *i.e.*, the issued Harris re-issue and Perla patents and such patent as might issue on Singer's then pending Johnson application. Singer's objective, however, was not, as stated by the Government (J.S. 7) to enforce, "both its own and Gegauf's, patents when issued". Singer's sole objective was to enforce Gegauf Patent No. 1 against machines embodying the basic feature of the Singer 401 zig-zag mechanism, which would be covered by and only by Gegauf Patent No. 1 (Op. 10a, 52a, 54a, 73a; Stanford, R. 1263 1265). Singer's objective was not to enforce Gegauf Patent No. 2 and it has brought no action under such patent (Op. 55a; Stipulation of Facts, Par. 85, R. 2413). Singer acquired the application upon which such patent ulti-

mately issued for reasons wholly unrelated to enforcement thereof. The facts as to such acquisition are fully covered in the opinion of the trial court (Op. 55a).

It was Gegauf Patent No. 1 and its power of exclusion that was wanted by Singer, not power of exclusion over and above it. Singer did not have and could not have had any desire to have the power of exclusion of its own three patents added to the power of exclusion of the Gegauf patents. The simple reason for this is that the power of exclusion of Singer's three patents would add practically nothing to the power of exclusion of such Gegauf patents, Gegauf Patent No. 1 and Gegauf Patent No. 2, when and if acquired by Singer. For exactly the same reason Gegauf could have had no possible interest in having the power of exclusion of Singer's three patents added to the power of exclusion of the Gegauf patents. Gegauf alone could, with its patents, exclude almost all machines that could be excluded by it, patents and Singer's combined. For instance, the Harris re-issue patent could not stop the importation of one single machine that Gegauf Patent No. 1 alone could not stop. The Harris re-issue patent was wholly subservient to Gegauf Patent No. 1, the Harris re-issue patent claiming word for word the claims of Gegauf Patent No. 1 in conjunction with the other features set forth in the Harris re-issue patent (Stipulation of Facts, Pars. 28, 29; R. 2383-2384; Dx. S-12, R. 2511; Dx. S-13, R. 2518-2519). Thus, infringement of the Harris re-issue patent *per se* infringes Gegauf Patent No. 1. The Johnson and Perla patents could stop only a few multiple cam machines having the ancillary feature of being able to take information from two cams at the same time. These few machines were manufactured by a single manufacturer in Japan. The number of machine

carried multiple cam sewing machines imported into the United States that would have infringed the Harris re-issue, Johnson and Perla patents had they been issued and would not have infringed either Gegauf Patent No. 1 or No. 2 had they been issued is as follows:

1957	1958	1959
0	249	800

(Stipulation of Facts, Pars. 128-129, R. 2425-2426; Dx. S-22-S-23, R. 2582-2583; Dx. S-25-S-30, R. 2585-2590.)

The number of machines that would have infringed the Harris re-issue, Johnson and Perla patents had they been issued that would not have infringed Gegauf Patent No. 1 or No. 2, had they been issued, namely, 0 in 1957, 249 in 1958 and 800 in 1959, would have represented the following portions of the household sewing machine market in the United States:

1957	1958	1959
0.00	0.00015	0.00044

In other words, out of every 10,000 household sewing machines in the United States market during the year 1959, the Singer patents, if issued, would have been able to exclude 4 machines that would not have been excludable by Gegauf Patent No. 1 or Gegauf Patent No. 2.

If a comparison is restricted to multiple cam machines alone, and there is no reason why it should be and the trial court has so found (Op. 81a-82a), the portions would be as follows:

1957	1958	1959
0.00	0.0011	0.0031[5]

[4] The evidence from which and the manner in which these figures are derived are shown in Schedules D and E, Pars. 321-822, to Defendant's Proposed Findings of Fact, R. 5075-5076.

[5] See note 4, *supra*.

In other words, *out of every 10,000 multiple cam sewing machines in the United States market* during the year 1959, the Singer patents, if issued, would have been able to exclude 31 machines that would not have been excludable by Gegauf Patent No. 1 or Gegauf Patent No. 2.

It would seem patently absurd to picture Gegauf as conspiring with Singer to get Gegauf's patents into Singer's hands so that it could get the benefit of the additional restraining power of Singer's patents, in combination with its own, when the additional restraining power, supposed to be such a tremendous inducement to Gegauf, consisted of the power to exclude from the United States no machines in 1957, 249 in 1958 and 800 in 1959. This is all the more so when it is realized that there is no evidence that Gegauf ever heard of the Johnson application or the Perla patent and there is evidence that it had not heard of them (Dx. 31, R. 5235).

(3) Singer's contemplated enforcement of Gegauf Patent No. 1, as its own welfare might dictate, constituted no semblance of agreement, understanding, common undertaking or unity of purpose. Singer's purpose was to exclude, not all machines of a particular type, but was to exclude machines infringing Gegauf Patent No. 1. As stated by the trial court, "Singer's sole interest was to protect its '401' machine against all infringing machines." (Op. 52a)

The Government cites a finding by the trial court that, upon acquisition of the Gegauf applications, "Singer had no intention of licensing others under these patents" (J. S. 9). This is a finding that Singer had no affirmative intention of licensing others. It, however, is not and is not intended to be, a finding that Singer had the affirmative intention of not licensing others.

The best evidence that Singer expected to use Gegauf Patent No. 1 in accordance with its own interests and desires, including the granting of licenses if desirable, is that, without any reference to Gegauf and without his knowledge, Singer did license Sears, Roebuck, receiving therefrom royalties in excess of $190,000 in two years, of which Gegauf received not a penny (Op. 68a-69a). The Government seeks to deprecate this by citing the fact that this was to Singer's interest because Sears was a good customer of one of Singer's subsidiaries and Singer felt constrained to grant such license (J.S. 9, n. 10). That is merely a long way of saying that Singer deemed the license to be to its interest and therefore granted the license.

It is significant that if Gegauf had any right to expect an enforcement of the Gegauf patent for the "mutual" benefit of Gegauf and Singer, this action of Singer in licensing Sears, Roebuck was squarely in the teeth of Singer's obligation and of Gegauf's expectation, in that it seriously impaired, for Singer's benefit alone, the prospect for the successful prosecution of the Tariff Commission proceeding (Op. 68a).

The possibility that Singer might wish to issue licenses and that it might do so is clearly shown by a statement of the President of Singer contained in the Government's Exhibit 57. It is there stated:

> "Accordingly, we should not only endeavor to ascertain who it is that might get a license [in the event that Gegauf insisted on reserving a right to license], but try to get Gegauf to refuse to give these licenses, or if he finds himself unable to do so, then to try to limit the license to a modest number of machines, thus leaving us free to either keep the flow of this type of machine down to the named figure, *or (if we prefer) to negotiate for a*

license fee which would somewhat compensate us for the nuisance value of such machines or for the high price that we paid for the patent." (R. 3573; emphasis supplied)

(4) The ability of Singer "to more effectively" enforce the patent, if in fact such ability existed, as Singer believed that it did, derived solely from the fact that Singer was in the United States with resources, experience and a staff equipping it to enforce a patent, whereas Gegauf was in Switzerland. These are merely personal attributes of the parties involved and in no respect furnish evidence of a conspiracy or common understanding.

(5) In its question the Government assumes a conspiracy relating to Japanese and "other imported sewing machines" and three different times in its Jurisdictional Statement it makes such assumption. On page 15 it states "there can be no doubt" that the arrangement between Singer and Gegauf whereby the respective patents were to be combined in Singer's hands "for the express purpose of excluding Japanese *and other competitors* from the American market" (emphasis supplied), falls within the category of proscribed concerted action. In two other instances the Government refers specifically and directly to an alleged conspiracy or understanding to exclude Japanese "and other importers" or "other competition" (J.S. 18, 19). "Other" machines refer to European machines, as only Japanese and European machines have been or are imported, and it will be noted that throughout the Government's Jurisdictional Statement reference is made only to Japanese and European machines. There is not and cannot be any issue in this case as to a conspiracy between Singer and Gegauf to exclude Japanese

"and other imported sewing machines," and it seems to us shocking that the Government should state to this Court that any such issue exists. Throughout all the proceedings in this case, including the trial and the briefing before the trial court, the theory of the Government has been that Vigorelli, Gegauf and Singer conspired to exclude Japanese multiple cam machines, while Singer alone attempted to monopolize by obtaining patents for the purpose of excluding all foreign multiple cam machines. Government counsel, in response to repeated questions by the trial court, stated that the alleged conspiracy related *solely* to the exclusion of Japanese machines and *that the exclusion of European importations was not part of such conspiracy.* The Government's contention made before this Court, in the face of its repeated declarations to the trial court, is so startling that we doubt that its position before the trial court can be fully appreciated without examining the colloquies. We set them forth in Appendix B hereto, pages 19a to 23a.

For an understanding of the attitude, purpose, intent and motives of Singer in its various actions in this case, the single most important fact is that Singer conceived, invented and developed the multiple cam zigzag mechanism which it embodied in its 401 sewing machine. This fact is not mentioned once in the Government's Statement. Singer completed the design of a completely new household zigzag sewing machine, including the zigzag mechanism incorporated therein, on April 29, 1953 (Op. 14a). This was prior to the introduction of any sewing machine incorporating a multiple cam mechanism into the United States market (Op. 16a). This 401 machine was to be Singer's star machine, the top of its line (Op. 21a). In 1959 it represented 45 per cent of the total dollar volume of Singer's entire household sewing machine busi-

ness in the United States (Op. 21a). Singer spent several years in the development of such machine and by June 1959, Singer had invested $9,000,000 in it, including $4,700,000 for tooling (Op. 14a; Stipulation of Facts, Par. 112, R. 2423). Gegauf Patent No. 1 covered the basic feature, the very heart, of the 401 multiple cam mechanism (Stanford, R. 1263-1265; 401 cam mechanism, Dx. 106 B; Op. 10a).

In Singer's negotiations with Gegauf Singer's refrain was that it wanted to acquire Gegauf's patent because Singer believed it could enforce the patent better than Gegauf could (Op. 53a). On the basis of this simple fact the Government runs the gamut of all possible phrases in attempting to bring the facts under Sections 1 and 2 of the Sherman Act. In turn it attempts to make a case of an "agreement," "conspiracy," "combination," "exclusory combination," "mutuality of interest" and "unity of purpose," its reliance, however, now apparently being placed upon the more ephemeral concepts of mutuality of interest and unity of purpose. The trial court disposed of all of them (Op. 52a, 53a, 54a, 72a-73a, 76a, 78a). It found that other than as set forth in the agreement, no agreement was made or understanding reached by the parties with respect to the licensing, enforcing or use of their patents (Op. 52a, 76a, 78a). Directing itself specifically to the Government's mutuality of interest and unity of purpose arguments, the trial court found:

> "It is most striking that, throughout, their dealings were characterized by an absence of unity or identity of any common purpose or motive. Singer's sole interest was to protect its '401' machine against all infringing machines." (Op. 52a; see also Op. 53a-54a, 72a-73a)

The Government's theory of "communicated unity of purpose" is based almost exclusively upon inferences or

conclusions drawn and expressed by Gegauf. How little there is to the Government's theory can be easily seen when it is realized that all inferences or conclusions that could have been drawn by Gegauf with respect to what Singer, Gegauf's licensee, manufacturing and selling under the license, might or would do upon acquisition of Gegauf's patent, could have been and obviously were drawn from these obvious facts:

(1) Sewing machines manufactured in Japan containing a multiple cam mechanism that infringed Gegauf's patent were being imported into the United States in substantial numbers, a fact well known to Singer, to Gegauf and any and every person acquainted with the sewing machine business.

(2) Singer wanted to acquire such patent from Gegauf and was willing to pay $90,000 for it, facts Singer could not very well avoid disclosing to Gegauf.

(3) Singer wanted the patent because it thought that it could enforce it better than Gegauf, a matter stated to Gegauf as an explanation as to why Singer wanted the patent, and a fact which has moved licensees to buy and licensors to sell patents since patent laws came into effect.

The Government professes that as a matter of law no competing licensor-licensee manufacturers and sellers under a patent could have these bits of knowledge in common and not be conspirators working with "a unity of purpose" when one of them sells to the other. The Government would seal the existence of "mutuality of interests" and "unity of purpose" out of the obvious fact, recognizable by Gegauf or by anyone else, that if Singer sought to purchase a patent it would seem to be a prac-

tical certainty that Singer expected to enforce the patent purchased. The trial court, after examining literally hundreds and hundreds of documents and listening to extended arguments and hearing testimony, knew and found that no conspiracy existed and that it could not be manufactured out of the mere existence and comprehension of knowledge that would be obvious to anyone awake. The trial court fully realized and found that there was no semblance of a conspiracy, agreement, combination, mutuality of interest or unity of purpose or any form of understanding pursuant to which Singer was to do anything with the patent acquired by it other than what Singer might desire to do in its own best interest as owner of the patent once acquired.

The trial court made among others the following findings:

> "With the exception of these specific limitations [set forth in the assignment agreement] on Singer's right to assert the Gegauf patent when issued, no agreement was made or understanding reached by the parties with respect to the licensing, enforcing or use of their patents. These writings were the entire agreement of the parties.
>
> "If one were to describe the attitude of these alleged 'conspirators' throughout, it would have to be in terms of suspicion, wariness and self-preservation. It is most striking that, throughout, their dealings were characterized by an absence of unity or identity of any common purpose or motive. Singer's sole interest was to protect its '401' machine against all infringing machines." (Op. 52a)
>
> "[The agreement] resulted from a fixed determination on each one's part to give and pay for nothing more than was absolutely necessary to secure its respective end and to carry on the protracted negotiations as distantly as possible." (Op. 53a-54a)

> "Here, certainly, was further evidence of the arm's length dealing which had characterized all Singer's dealings with Gegauf." (Op. 72a-73a)

With respect to an attempt by the Government to relate one of the provisions of the Gegauf-Singer license agreement to an alleged conspiracy "to pool patents" in Singer and to establish broad patent monopolies in both conspirators, in order to exclude Japanese competition, the trial court stated:

> "The plain answer to this is that we have found that there was absolutely no agreement or conspiracy." (Op. 76a)

Referring to a restriction on Singer's right to sue Pfaff contained in the Singer-Gegauf assignment agreement, the trial court said:

> "Aside from this there was no other understanding or agreement with respect to licensing or enforcing by infringement action or otherwise, any patent, then owned or subsequently acquired, or with respect to the use in any way of any such patent, alone or in conjunction with any other patent. The written agreement expressed the complete agreement and understanding of the parties and we conclude that it contained nothing illegal." (Op. 78a)

In the light of the facts and the trial court's findings of fact, the Government's first question should be:

> Whether an American company, which (1) conceived, invented and developed a mechanism ultimately covered by claims allowed in a foreign-owned U. S. patent, (2) had a license under such patent and was manufacturing and selling in the United States a machine embodying the specific

> mechanism covered by such patent, and (3) believed that, as a practical matter, it could enforce such patent better than the foreign owner, engaged in a combination or conspiracy in violation of Section 1 or 2 of the Sherman Act, by purchasing that patent for the purpose, comprehended by such foreign owner, of enforcing the patent against infringers in accordance with its own best interests.

Instead the Government seeks to construct a picture at variance in every detail with that which the trial court, on the basis of numerous documents and testimony, found with respect to the attitude, motive, purpose and intent of Singer and Gegauf. Decisions of this Court establish that the Government cannot obtain a review of facts and a reversal of the trial court's findings by inducing this Court to give the facts another construction and draw inferences of fact diametrically opposed to those found by the trial court, resolve all ambiguities differently, and find a sinister cast to actions the trial court found innocent, unless clear error is urged and demonstrated.

In *United States* v. *Real Estate Boards*, 339 U. S. 485, 495-96 (1950), this Court said:

> "It is not enough that we might give the facts another construction, resolve the ambiguities differently, and find a more sinister cast to actions which the District Court apparently deemed innocent [citing cases]. We are not given those choices, because our mandate is not to set aside findings of fact 'unless clearly erroneous.'"

As pointed out by this Court in *United States* v. *Yellow Cab Company, supra*:

> "Findings as to the design, motive and intent with which men act depend peculiarly upon the

> credit given to witnesses by those who see and hear them." (338 U. S. at 341)

The Government's pretending that it is not urging this Court to make a plenary review of the record in this case and to reverse substantially all of the trial court's findings of fact (J.S. 4, 19, 20, 21) is futile, since it is overwhelmingly clear that this is in fact what it is doing. A mere statement that the pertinent facts "are not in dispute" cannot conceal the obvious.

Question 2 is Unsubstantial.

The second question presented by the Government (J.S. 2) as amplified, explained and argued in its Jurisdictional Statement, is predicated upon the existence of an intent by Singer to exclude from the United States *all* multi-cam machines, or at least all multi-cam machines of Japanese manufacture.

In its second question the Government asks whether the "acquisition" and use of "these" patents by Singer, "the only domestic manufacturer of sewing machines," with the intent to exclude "competing machines" constitutes an attempt to monopolize. Here, again, neither the underlying facts nor the facts found by the trial court, or even the Government's own concession, play any part in the factual assumptions.

(1) As presented in the text of the second question, "these patents" must refer to all five Singer patents. Yet the Government has conceded that there was nothing improper in Singer's acquisition of its Johnson, Perla or Harris patents (Op. 3a).

(2) The Government in its question uses the parenthetical phrase—"the only domestic manufacturer of such

sewing machines"—this, of course, without taking any responsibility therefor, creates the aroma of domination probably obtained by predatory means. The use of this phrase without any accompanying explanation is unjustified and misleading. The fact is that the Japanese dominate the United States market. Singer has been able to withstand the assault upon that market by Japanese manufacturers and importers who are controlled in practically all matters by the Japanese Government (Op. 17a-18a; Fairman, R. 1680-1694, 1721; Sogi, R. 1858-1893; Dxs. 176-183, R. 5676-5742; Dx. 191, R. 5755; Gx. 202, R. 5122-5132). Singer's share of the market, however, dropped from approximately 57% in 1947 to approximately 32% in 1959, while the Japanese share of the market in that period grew from none to approximately 60% (Dx. 191, R. 5755; see, also, Op. 17a-18a). During that period every manufacturer of sewing machines in the United States failed to withstand the Japanese competition and folded, save, with one minor exception, Singer alone (Op. 17a-18a).

(3) Singer's intent was not, as stated in the Government's question, "to exclude competing machines". Its intent was to exclude machines *infringing Gegauf Patent No. 1* (Op. 52a, 54a; Def. App. 17a-18a). The trial court found that Singer's "sole" interest was to protect its 401 machine against infringing machines (Op. 52a); that, as a non-exclusive licensee of a foreign-owned patent, Singer in the United States felt at the mercy of infringers and realized the need for independent ownership of the Gegauf Patent No. 1 (Op. 54a); that this was the motive behind the acquisition (Op. 54a); that Singer's insistence upon acquiring the Gegauf divisional application was the need to protect a cross-license agreement entered into with Messerschmitt (Op. 55a); that Singer's motive in acquiring

the divisional application was not only perfectly consonant with good business practices but entirely lawful (Op. 55a); and that the Tariff Commission proceeding was brought by Singer in a bona fide attempt to obtain protection for its 401 machine (Op. 73a). Thus, Singer's affirmative intent was found by the trial court to have been directed at all times to a single objective, namely, the protection of its 401 multiple cam machine by enforcement of Gegauf Patent No. 1.

Without exception, each of the infringement actions brought by Singer and the Tariff Commission proceeding were brought with respect to sewing machines that infringed Gegauf Patent No. 1. Not a machine which did not infringe Gegauf Patent No. 1 was involved in any such action or proceeding (Def. App. 17a-18a). When such machines also infringed the Harris re-issue patent or the Johnson patent, infringement of such patent was incorporated in the complaint. The use of such patent, however, was in conjunction with an attempt by Singer to enforce Gegauf Patent No. 1 (Stipulation of Facts, Par. 84, R. 2412-2413). Except in conjunction with an attempt by Singer to enforce Gegauf Patent No. 1, Singer has not brought any action, commenced any proceeding, or made any attempt to enforce the Harris re-issue patent or the Johnson patent (Stipulation of Facts, Par. 84, R. 2412-2413); and Singer has not at any time brought any action or commenced any proceeding or made any attempt to enforce Gegauf Patent No. 2 or the Perla patent by suit, notice or threat of suit (Stipulation of Facts, Par. 85, R. 2413). Thus, Singer's actions at all times since the issuance of the Gegauf patents have been directed to an attempt to stop the sale in the United States of machines which infringed Gegauf Patent No. 1.

It will be noted that in the Government's charge that Singer sought to exclude "competing machines", no distinction is made between competing machines *that infringe* Gegauf Patent No. 1 and competing machines *that do not infringe* such patent. For example, the Government states:

> "Thus, Singer indisputably acquired *the Gegauf patent*, under which it already had a royalty-free license, with the specific intent to exclude *all competitors* from—and thereby to monopolize—the market for *multi-cam machines*." (J.S. 21; emphasis supplied)

Strangely enough, the "Thus" in the preceding quotation referred *directly and specifically* to the trial court's finding that Singer sought to bar "all *infringing* machines." (Emphasis supplied) In this way the trial court's finding that Singer's intention was directed to "infringing machines" is used by the Government to demonstrate to this Court that Singer's intent was directed to "all competitors."

Persistent use by the Government of Singer's intention to exclude "infringing machines" as the equivalent of an intention to exclude "all competing machines" is of course misleading and results in the furnishing by the Government of a considerable amount of statistical misinformation or misapplied correct information.

In support of its statement that Singer sought to exclude all "competing" machines, the Government states that during the years 1957-1959 more than "90%" of the multiple cam machines imported from Japan would have been excluded by Gegauf Patent No. 1 (J.S. 10). It further states that if the decision below is allowed to

stand, Singer, through the enforcement of its combined patents—"primarily" those acquired from Gegauf—will be able to increase its share of the domestic multiple cam market from approximately 60%, as of 1959, to more than 90% (J.S. 15). These statements do not enlighten. They becloud and conceal the facts.

The facts are that in 1957, the year in which, on December 5, Singer bought the Gegauf patent, there were three manufacturers in Japan which had manufactured multiple cam machines imported into the United States. The entire importations of all such machines from each company were machines that would have infringed Gegauf Patent No. 1. No other multiple cam machine was imported from Japan (Dx. S-25, R. 2585; Dx. S-26, R. 2586). Thus the Government could just as well have said that in 1957 "100%" of the multiple cam machines imported from Japan would have been excluded by Gegauf Patent No. 1. Or the Government equally could have said, "Singer through the enforcement of *its combined patents—primarily those acquired from Gegauf*—would have been able to have excluded 100% of the multiple cam machines imported from Japan in 1957." In either case all it would have said was that in 1957 all machines imported from Japan infringed Gegauf Patent No. 1. The question, then, is whether there is anything wrong with a patent owner being able to exclude 100% of the mechanisms specifically covered by his patent. By-passing the obvious answer to that question and assuming that the United States would be better off if other manufacturers produced non-infringing multiple cam mechanisms, the facts show that that is exactly the development that took place.

In 1958 and 1959 the situation percentagewise was changed considerably, because companies started manufacturing machines with non-infringing multiple cam mechanisms. The result was that machines with mechanisms that infringed Gegauf Patent No. 1, manufactured solely by four Japanese manufacturers, represented 91½% of the multiple cam machines imported into the United States from Japan in 1958, while machines with mechanisms not infringing such patent represented 8½%. Machines with mechanisms that infringed Gegauf Patent No. 1, manufactured solely by four Japanese manufacturers, represented 68% of the multiple cam machines imported into the United States from Japan in 1959, while machines with mechanisms not infringing such patent represented 32% (Dx. S-25, R. 2585; Dx. S-26, R. 2586). In other words, such non-infringing machines had increased from 0 in 1957 to 8½% in 1958 to 32% in 1959, the number of such imports in 1959 being 500% of the number of similar imports in 1958 (Dx. S-25, R. 2585). It thus is easy to see why the Government preferred to use an average figure of 90% for three years (J.S. 10).

These figures demonstrate the fallacy of proclaiming that through ownership of a patent the owner has acquired "90%" or "100%" of the market. That is of importance only if there is some unlawful monopoly or some unlawful restraint on the manufacture of non-infringing devices. Absent that, it is wholly irrelevant and immaterial that 100% of the imports of a particular mechanism would infringe a particular patent every year for the entire life of the patent, the very object of the patent being to give a monopoly of the mechanism covered thereby.

There are "all manner" of multiple cam sewing machines on the market not infringing Gegauf Patent No. 1 "capable of doing the same thing" (Op. 81a; Stipulation of Facts, Pars. 94-97, R. 2417-2418; physical exhibits—Gx. 207, Dx. 112, 112B, 113, 113B, 114, 115). There is no reason why multiple cam mechanisms not infringing Gegauf Patent No. 1 cannot be made to any extent and in numerous forms and variety by Japanese or other manufacturers who wish to make them. It comes down primarily to the simple question of four manufacturers in Japan either not wishing to go to the expense of changing their tooling or frankly preferring to infringe an American patent. It is these four manufacturers of multiple cam mechanisms infringing Gegauf Patent No. 1 that the Government here seeks to protect, not Japanese-American trade.[6]

[6] The Government's suggestion that its questions are substantial because the decision of the trial court will have "a substantial impact" upon "the course of trade" between Japan and the United States (J.S. 15) is untenable because even if there would be such an impact it would not render substantial an unsubstantial question. Furthermore, the statement is not correct. Line I below shows the percentage which the number of multiple cam sewing machines exported from Japan to the United States represented of the total number of household sewing machines exported from Japan to the United States. Line II below shows the percentage which the dollar value of household sewing machines imported into the United States from Japan represented of the total dollar value of merchandise for consumption imported into the United States from Japan.

	1957	1958	1959
I.	3.3%	4.6%	4.6%
II.	2.9%	2.8%	2.4%

From these percentages it is obvious that multiple cam sewing machines are an infinitesimal part of the trade between Japan and the United States. (Dx. S-25, R. 2585; Dx. S-31-S-33, R. 2591-2593; Dx. 174, R. 5674; Cohen, R. 1949-1950; U. S. Dept. of Commerce, United States Imports of Merchandise for Consumption, Report No. FT 120, for Calendar Years 1957, 1958 and 1959.) Multiple cam machines that infringe Gegauf Patent No. 1 would be even less.

The Government protests the trial court's finding that Singer had no specific intent to monopolize, asserting that the trial court "apparently" held that Singer had no specific intent to monopolize because Singer did not try to exclude manufacturers of "every other type" of sewing machine that might compete with the multiple cam machines, citing page 81a of the trial court's opinion (J.S. 22). This, we submit, is an erroneous assumption. The basis of the Government's assertion is that the trial court found, "Singer's refusal to grant licenses to competitors and its attempt to eliminate infringers, leaving as competitors all manner of sewing machines with devices capable of doing the same thing over which Singer had no control, indicates no intent nor attempt to achieve an illegal monopoly" (Op. 82a). It is first to be noted that the trial court made no reference to "every other type" of machine, that being the Government's phrase. In pointing out that Singer was "leaving as competitors all manner of sewing machines with devices capable of doing the same thing over which Singer had no control" the trial court was referring to non-infringing multiple cam machines. The trial court previously had found that Singer's affirmative intent was directed at all times to a single objective, namely the protection of its 401 multiple cam machine by enforcement of Gegauf Patent No. 1. In the statement above quoted, the trial court was negativing Singer's refusal to license and its attempt to eliminate infringers as being an indication of an intent or an attempt to achieve a monopoly. It was saying that in refusing to license "competitors" to manufacture Singer's "multiple cam machines" it was leaving as "competitors" all manner of sewing machines "with devices capable of doing the same thing." The Government would have it that in referring to the *competing* "all manner of sewing machines

with devices capable of doing the same thing," the trial court "apparently" was not referring to non-infringing multiple cam machines but to "every other type" of sewing machine that might compete with multiple cam machines. This has the absurd result of presenting the trial court as not considering non-infringing multiple cam machines as competing with multiple cam machines produced under the Gegauf Patent No. 1.

We point out in this connection that the trial court had before it the Stipulation of Facts (Pars. 94-97, R. 2417-2418), various non-infringing multiple cam machines and testimony of witnesses concerning non-infringing multiple cam mechanisms. The extent of the factual information which the trial court had before it supporting a finding that there were all manner of multiple cam sewing machines with devices capable of doing the same thing as machines produced under Gegauf Patent No. 1, can be appreciated upon an examination of Defendant's Proposed Findings 210-214 (R. 5920-5926) and the various references there given, which are set forth in Appendix C hereto, pages 24a to 31a.

Multiple cam sewing machines, much less multiple cam sewing machines infringing Gegauf Patent No. 1, do not constitute a relevant market subject to monopolization or an attempt to monopolize. The machine referred to as a multiple cam sewing machine is first and foremost a straight stitch sewing machine (Op. 7a; Hutton, R. 1317-1319). It not only primarily is a straight stitch sewing machine but it is used approximately 90% of the time for sewing straight stitches (Op. 6a, 7a; Hutton, R. 1317-1319, 1324-1326, 1328-1329). It is a sewing machine which has incorporated in it a cam mechanism, one of the cams of which causes the needle of the machine to vibrate laterally of the movement of the material being sewn, thus auto-

matically producing a zigzag stitch, varying in design with the configurations upon the particular cam selected. The same design, however, can be produced by exactly the same cam placed in a replaceable cam sewing machine, which, when engaged, operates automatically to exactly the same extent and in the same manner as does the cam in the multiple cam machine (Op. 7a-8a). In neither machine can a cam be selected automatically, in each case selection of the particular cam desired being made by manual means (Op. 8a). Similarly, a straight stitch machine with a zigzag attachment affixed, containing one or more cams, produces zigzag stitches automatically, and a manual zigzag machine produces a plain zigzag automatically, while ornamental stitches may be produced thereon by an operator, the variety and form thereof depending upon the skill of the operator (Op. 7a-8a, 81a-82a; Hutton, R. 1296-1299, 1380-1383, 1452-1454). The trial court heard detailed evidence on the operation of all of those machines, received in evidence materials upon which they sewed and received the designs which they produced, and heard testimony from witnesses fully familiar with and expert in the workings of the market. Having previously found that there was no intent to monopolize multiple cam machines (Op. 52a, 54a, 55a, 73a, 81a), the trial court found as follows:

> "It is, therefore, unnecessary to consider at length Singer's power to achieve a monopoly in the relevant market as bearing on its intent. If it were necessary to our decision, we would find the relevant market to be automatic zigzag sewing machines of four types: machine carried multicam zigzag, replaceable cam, manually operated and the straight stitch sewing machine with zigzag attachment. These four machines, we find, are

> sufficiently unique to constitute a separate market within which these machines are reasonably interchangeable for the use to which they are put. *United States* v. *Du Pont*, 351 U. S. 377, 395, 396." (Op. 81a-82a)

Having found that such four types of machines constituted the relevant market, the trial court further found that within the market the evidence clearly established that Singer did not have the power to achieve a monopoly and that such lack of power further evidenced absence of a specific intent on Singer's part to achieve a monopoly. The trial court found:

> "Within the market as defined the evidence clearly establishes that Singer did not have the power to achieve a monopoly; this lack of power further evidences absence of a specific intent on Singer's part to achieve a monopoly. *U. S.* v. *Columbia Steel, supra.*" (Op. 82a)

Question 3 is Unsubstantial.

The third question presented by the Government (J.S. 2) is whether an agreement between Singer and Gegauf "executed in connection with the above combination"[7] was

---

[7] The trial court, pointing out that the Government conceded that it had found no authority in support of its charge of illegality of the agreement referred to, made the following finding:

> "Recognizing the weakness of the charge standing alone, the Government relates this provision to an alleged underlying agreement or alleged conspiracy to 'pool patents' in Singer and to establish 'broad patent monopolies' in both conspirators in order to exclude Japanese competition. *The plain answer to this is that we have found that there was absolutely no agreement or conspiracy.*" (Op. 76a; emphasis supplied.)

The element, embodied in the question, of execution of the agreement "in connection with the above combination", is wholly unsupported by the facts and is contrary to the facts found.

an unreasonable restraint of trade, in that each undertook, "with respect to the patents or pending applications of the other," to refrain from any action which might "restrict the scope of the other's claims" and to facilitate the granting of claims "of the broadest possible scope."

This question, of course, refers to the agreements contained in the two separate sentences composing clause 1 of the Singer-Gegauf cross-license agreement. That clause reads as follows:

> "1) SINGER and GEGAUF each undertakes not to do anything, either directly or indirectly and in any country, the result of which might restrict the scope of the claims of the other party relating to the subject matter of the above mentioned patents and patent applications.
>
> "SINGER and GEGAUF each undertakes, in accordance with the laws and regulations of the Patent Office concerned, to facilitate the allowance in any country of claims as broad as possible, as regards the subject matter of the patents and patent applications referred to above." (Def. App. 33a, Gx. 26, R. 3510)

The Government's third question again makes factual assumptions which are squarely contrary to the facts that exist and the facts found by the trial court. As shown in footnote 7 on page 30, *supra*, the trial court found that the agreement was not executed in connection with a combination or conspiracy as none existed. The agreement was not with respect to "the patents or pending patent applications of the other." It was with reference to specifically identified patents and patent applications set forth in the preambles of the agreement (Op. 36a), *i.e.*, the United States Harris patent and re-issue application and corresponding foreign patents and patent appli-

cations and the United States Gegauf application and corresponding foreign patents and patent applications (Def. App. 32a-33a, Gx. 26, R. 3509). The agreement not to take action which might restrict the scope of the claims of the other, related only to steps in proceedings in foreign countries having invalidation, opposition and nullity proceedings (Op. 36a). The agreement to facilitate the granting of claims referred to proceedings in countries, including the United States, having interference or priority determining proceedings (Op. 37a; Stanford, R. 1108) and there the claims to be facilitated were not claims of "the broadest possible scope," as stated in the question, but were claims to be facilitated as broad as possible "in accordance with the laws and regulations of the Patent Office concerned" (Op. 37a).

Throughout the trial the Government contended that under the United States antitrust laws, the agreement contained in *the first sentence* above quoted was illegal *per se*. The Government specifically advised the trial court that the agreement not to do anything which might restrict the scope of the claims of the other party was the "only" phase of the cross-license agreement which the Government contended was unlawful (Plaintiff's Memorandum Relative to Defendant's Proposed Findings, R. 6195-6196). It reiterated this position in its Post Trial Brief (R. 6423) and the trial court clearly understood that such was the Government's contention (Op. 75a).

The trial court found that the first sentence was interpreted and intended by Singer and Gegauf to mean that neither would file opposition, *i.e.*, nullity and invalidation, proceedings against the other's applications in foreign countries where such special proceedings were known (Op. 36a), in other words, that it applied to foreign coun-

tries having such proceedings and not to the United States or any other country not having such proceedings.

The Government, by footnote, now challenges this finding of fact (J.S. 24, n. 20). At this point, before proceeding any further, we wish to point out that the Government's presentation of the foregoing clause 1 on pages 6 and 7 of its Jurisdictional Statement is inaccurate and grossly misleading. There the format of the preambles of the license agreement is materially altered from the format in which they appear in the agreement (Def. App. 32a-33a, Gx. 26, R. 3509-3510). This change in format is made (1) by setting forth *a portion* of the next to the last preamble of the agreement, which specifically refers to the prospective opening of interference proceedings in pending Singer and Gegauf United States applications,[8] (2) by omitting an entire page of preceding preambles containing recitals of the specific patents and patent applications covered by the agreement, and (3) by reparagraphing so that a sentence in the final preamble, which commences *a new paragraph*, appears in the Jurisdictional Statement *as part of the preceding paragraph*.[9] The omitted preambles, in addition to the Gegauf and Singer United States applications, list eight different patents and five different patent applications in *nine* different foreign countries. These are preambles of the agreement the same as is the single quoted preamble appearing on page 6 of the Jurisdictional Statement. The finishing touch is the reparagraphing. In the

[8] The portions omitted, indicated by asterisks, would show, if set forth, that various patents and patent applications had been listed previously.

[9] The Singer-Gegauf license agreement with all of its preambles and properly paragraphed as in the original is set forth in Appendix D hereto, pages 32a to 35a.

license agreement the words "In view of the foregoing" commence a new paragraph and refer to *all* preceding preambles. As set forth on page 6 of the Jurisdictional Statement they *do not*, as by the reparagraphing they are made to refer only to the specific patent applications referred to in the paragraph of which they are made a part, *i.e.*, the United States Harris re-issue and Gegauf applications. This alteration of the format of the agreement, if relied upon, would completely eliminate any possibility that the "In view of the foregoing" paragraph referred to all of the listed foreign patents and patent applications, as well as to the Gegauf and Singer applications in the United States. The result would be that one would find it difficult to understand how the first sentence of clause 1 could be construed other than as applying to the United States, as urged by the Government. Such omissions and alteration however occurring, and, to date, not corrected, may give the Government a temporary first impression advantage. They certainly do not provide enlightment to this Court as to the facts in the case.

Peculiarly, the Government's attack on the trial court's finding that the first sentence applies to foreign countries and not to the United States is set forth in, and only in the above mentioned footnote (J.S. 24, n. 20). It there supports its challenge by two assertions in a single sentence: (1) that the finding conflicts with "the plain words" in the agreement, and (2) that it conflicts with "documents written by employees of Singer interpreting the agreement," which it neither specifies nor cites. Upon that bare statement the Government seeks a review by this Court of the trial court's finding and necessarily of all of the underlying facts that bear upon the question and a

determination contrary to the trial court's finding. What the Government contends with respect to the underlying facts is not specified, except that it does volunteer that a contemporaneous writing by Singer's negotiator of the agreement and testimony of such negotiator support the finding (J.S. 11, n. 13).

The Government argues that the first sentence must be construed as applying to the United States since otherwise the words "in any country" would have been used to specify specific countries in one sentence whereas the same words would be used to specify the United States in the second sentence (J.S. 11). The argument is unsound. The words "in any country" in the first sentence are obviously intended to apply to any and all countries, not any specific country, to which the sentence is applicable and the sentence was intended to be applicable to countries having invalidation, opposition and nullity proceedings. Similarly, the words "in any country" in the second sentence apply to any and all countries to which the second sentence is applicable, and the sentence was intended to be applicable to countries having interference proceedings.

The evidence is clear that in fact the first sentence was intended to have reference to and be applicable to those foreign countries which had invalidation, opposition and nullity proceedings in which one may restrict the scope of claims of others (Dx. 31; Stanford, R. 1106-1112; Gx. 38, R. 3534-3535; Gx. 39, R. 3536-3537; Gx. 41, R. 3539-3540). The trial court has found that it was so intended, stating, "Although the language is quite broad, this provision was interpreted and intended by Singer and Gegauf to mean that neither would file opposition, *i.e.*, nullity and invalidation proceedings against the other's applications in foreign countries where such special proceedings were known." (Op. 36a)

The agreement in the first sentence "not to do anything, • • • in any country," followed by the phrase "the result of which might *restrict the scope* of the claims of the other party • • •"[2] (emphasis supplied) is without question *susceptible* to the construction that it refers to not doing anything in any country which has available the kind or type of proceeding in which one may "restrict the scope" of claims of others, and accordingly as being intended to be applicable to such countries. It is a well-established principle of law, stated and cited frequently, that where two constructions of a written contract are possible, preference will be given to that which does not result in violation of the law. *Great Northern Railway Company* v. *Delmar Company*, 283 U. S. 686 (1931); 3 Corbin, *Contracts*, §546 (1960); 4 Williston, *Contracts*, §620 (3d ed. 1961); 17 C.J.S. *Contracts*, §318 (1939).

Not only is the first sentence of clause 1 *susceptible* to the construction that it refers to any country in which one has available special proceedings to "restrict the scope" of claims, it in fact could not be read as being applicable to countries in which there are interference proceedings and not thereby render contradictory the two provisions of that clause. It is quite impossible for one party to obtain the allowance of a claim in an interference, even on the basis of priority alone, without thereby restricting the scope of the pending claim of the other party relating to the same subject matter. The presentation, in an interference proceeding conducted under the second sentence, of a claim of earlier priority would be contrary to the agreement contained in the first sentence not to take any action which would restrict the scope of the claim of the other. The result would be that the provision designed to permit one to obtain expeditiously

claims "as broad as possible" in accordance with the laws of the Patent Office concerned would, if carried out, render nugatory the contrary obligations contained in the first sentence not to restrict the claims of the other party. Thus, "the plain words" of the first sentence are not so clear and unequivocal as the Government would have this Court believe. No such problem arises and otherwise clearly contradictory provisions are easily reconciled, when the simple fact is recognized that the first sentence applies to one type of proceeding and the second sentence to an entirely different type of proceeding.

To appraise the extent to which the first sentence and the second sentence have entirely different functions, one must consider the procedures and practices in foreign countries which provide for invalidation, opposition and nullity proceedings. In some foreign countries claims contained in patents are of no significance in establishing the scope of the invention and are not even resorted to for the purpose of determining what the invention is, the validity and scope of the invention being determined by the disclosures, not by the claims. In such countries the patent application is of slight importance, the remedy of each individual affected by any patent issued thereon being an invalidation or nullity proceeding in which the scope of the patent, as it affects such individual, may be determined. These and other aspects of the laws of Italy, France, Germany, Brazil and Great Britain are covered by the stipulation of the parties, dated May 5, 1961 (Court's Exhibit 4, R. 5768-5577).

Among the numerous facts relevant to the trial court's finding that the provisions of the first sentence of clause 1 related to proceedings in foreign countries having invalidation, opposition and nullity proceedings, and that the

second sentence related to proceedings in the United States and other countries having interference proceedings are the following:

1. The provisions of the Singer-Vigorelli and Singer-Messerschmitt license agreements dealing with the same subject matter by their terms related to the two different types of proceedings, one provision applying to invalidation, opposition and nullity proceedings and the other provision applying to proceedings in countries providing interference proceedings (Gx. 11, R. 3466-3469; Gx. 86, R. 3652-3653; Stanford, R. 1079-1081; Def. App. 37a, Dx. 133 id., R. 5547, submitted and received as an aid to the trial court, R. 921-924).

2. A comparison of the relevant provisions of the three license agreements clearly demonstrates that the same result was intended. A chart setting forth for such comparison the relevant provisions of the three license agreements (which was submitted and received as an aid to the trial court (R. 921-924)), is set forth as Appendix E hereto, page 37a (Dx. 133, id., R. 5547).

3. The Singer-Gegauf license agreement related not only to the United States applications but to patents and applications in foreign countries having invalidation, opposition and nullity proceedings, in which a petitioning party may restrict the scope of the claims of a patent (Def. App. 32a-33a, Gx. 26, R. 3509; Dx. 31, R. 532-533; Stanford, R. 1106).

4. Under the agreement each party licensed the other under patents and/or patent applications in such foreign countries, there thus being available to the licensee procedures to restrict the scope of the patent licensed and

reasons for the licensor to require that they not be used by the licensee to attack such patent (Def. App. 32a-34a, Gx. 26, R. 3509-3511).

5. The second sentence of clause 1 provides only for the facilitation of the allowance of claims, a provision which could have no application in countries which provide only invalidation, opposition and nullity proceedings, and thus could have application only in countries having procedures of the nature of interference proceedings.

6. The license agreement was so construed in a contemporaneous memorandum, written for Singer personnel (Dx. 31, R. 5231-5237), not for the "files" as asserted by the Government (J.S. 11, n. 13; J.S. 24, n. 20).

7. Singer wrote Gegauf with reference to the interference proceeding: "Our agreement provides that this interference is to be settled in accordance with the patent laws of the United States," thus confirming that it was the agreement contained in the second sentence of clause 1 that covered the conduct of the interference proceeding in the United States. Not the slightest suggestion was made or indication given that the interference proceeding was covered by any other agreement (Gx. 38, R. 3534-3535; Gx. 39, R. 3536-3537; Gx. 41, R. 3539-3540).

8. A reliable and responsible witness who negotiated the agreement testified that such was the intention and interpretation of clause 1 (Stanford, R. 1106-1112).

The Government argues that Singer sought an agreement under which it could obtain patents with claims "as broad as possible" or with claims having the "broadest possible scope." It is hard to determine whether in doing so (1) it is attacking the validity of the second sentence of

clause 1, from which the words "as broad as possible" are taken, notwithstanding its assertions to the trial court that the "only" phase of any provision of any of the agreements that it claimed to be illegal was the agreement not to do anything to restrict the scope of the claims of the other (Plaintiff's Memorandum Relative to Defendant's Proposed Findings, R. 6195-6196; Plaintiff's Post Trial Brief, R. 6423), or (2) it is contending that Singer sought patents with claims "as broad as possible" and that it follows that Singer, of course, intended that the provisions of clause 1 would apply in the United States in order to help it in its allegedly illegal schemes. In any event, the phrases "as broad as possible" and "the broadest possible scope," set forth repeatedly by the Government, obviously are intended, without specifically saying so, to carry with them the implication that they encompass claims beyond those commensurate with the prior art and the applicable law. The Government, however, has never specifically set forth any meaning or interpretation to be attributed to the words "the broadest possible scope" or to the words actually used in the agreement, "as broad as possible." The reason for this may be that the moment one ceases to rely alone upon the sound and fury of the words and resorts to analysis as to their meaning, it is made apparent that there is not necessarily anything illegal or improper in seeking to acquire a patent with claims as broad as possible. An agreement, for example, to facilitate the allowance of claims as broad as possible, if meaning "as broad as possible commensurate with the prior art and the applicable law," would not be illegal in any way, much less *per se*. It necessarily follows that to challenge the legality of an agreement to expedite the allowance of

claims as broad as possible the words "as broad as possible" must be construed to mean without regard to the prior art and without regard to the applicable law and must be deemed to call for cooperative action to that end, without regard for truth, whether or not involving fraud, concealment, failure to disclose or other similar conduct. If this is not the Government's contention, the answer to a question as to whether parties can agree to expedite the obtaining of claims "as broad as possible" is an obvious yes, and the question has no legal significance. In the face of the record in this case and the findings of the trial court with respect to the motives and intent of the parties, it would be ludicrous to contend that Singer desired or endeavored to get an agreement under which it could obtain claims beyond that commensurate with the prior art and the applicable law by resort to fraud, concealment, failure to disclose or otherwise. The Government has never made any contention that Singer did so desire or so endeavor and it carefully refrains from doing so in its Jurisdictional Statement. The trial court found that Singer did not (Op. 75a).

Among the numerous facts relevant to the trial court's finding that there was no intent to obtain broad patent protection regardless of validity (Op. 75a) are the following:

1. There is not a single element of the various elements composing the second sentence of clause 1 that is not modified by the phrase "in accordance with the laws and regulations of the Patent Office concerned." Every action required to be taken under that sentence is qualified by the mandate that it shall be in accordance with the laws and regulations of the Patent Office concerned (Def. App. 33a, Gx. 26, R. 3510).

2. The agreement was made not in a vacuum but with reference to claims covering the specific subject matter embodied in specific applications (Def. App. 32a-33a, Gx. 26, R. 3509-3510).

3. There existed and was clearly evidenced a resolute determination that the priority proceedings should be conducted in accordance with the laws of the United States in such manner as would result in a valid patent, the desirability and necessity of which was expressed in writing (Gx. 38, R. 3534-3535; Gx. 39, R. 3536-3537; Gx. 41, R. 3539-3540).

4. The claims of the patent are valid and are conceded by the Government to be valid (Op. 76a; Stipulation of Facts, Par. 93, R. 2416).

5. Singer purchased the patent for the purpose and with the expectation of enforcing it against infringers, which it was well known would include Japanese manufacturers and importers (Op. 52a-53a).

6. Singer promptly placed the validity of the patent squarely in issue by bringing an action against the largest distributor of Japanese sewing machines, the sole representative of one of the largest sewing machine manufacturers in Japan (Op. 74a; Stipulation of Facts, Par. 98, R. 2419).

No attempt is made by the Goverment to demonstrate or evaluate the effect of a determination by this Court, in favor of the Government, of the third question it presents. The license agreement, apart from the challenged clause 1, restricts and restrains nothing. Even assuming *arguendo* that the agreement contained in the first sentence of clause 1 was applicable to the United States, it was

applicable there solely to the then impending interference proceeding, involving a single claim covering the common subject matter of the Singer and Gegauf applications (Gx. 176, R. 4199-4216). It can become applicable to no other. The trial court found that no acts were done pursuant to it (Op. 75a-76a). Taking no action pursuant to a particular agreement obviously would be a natural result of there being no belief or understanding that such agreement applied to interference proceedings in the United States. Precautions were taken to make certain that the interference proceeding was conducted in accordance with the laws and regulations and that a valid patent issued (Gx. 38, R. 3534-3535; Gx. 39, R. 3536-3537; Gx. 41, R. 3539-3540). The claim set up in interference by the Examiner was issued in Gegauf Patent No. 1 in the precise form in which it was so set up (Stipulation of Facts, Par. 28, R. 2383) and the Government concedes the validity of such claim (Op. 76a; Stipulation of Facts, Par. 93, R. 2416). If the first sentence of clause 1 should be construed as applying to the United States it would result solely from the failure of a draftsman, who took a draft prepared by another (Stanford, R. 1103-1105), and attempted and intended to make out of it, with as few changes as possible, a valid agreement, "similar" to the agreement with Vigorelli (Stanford, R. 1103-1112; Dx. 31, R. 5232-5233; Gx. 11, R. 3466-3469; Stanford, R. 1079-1081; Op. 32a-33a).

The Government neither suggests the nature of any injury that was done or the remedy, if any, that should be applied thereto. It is hard to conceive of a question that has a combination of so little substance and so little importance insofar as the development of the antitrust laws and maintenance of competition are concerned as the Government's third question properly related to the facts in this

case. This is the more so, when to reach such question the facts of the case must be reviewed by this Court and this Court must reverse the finding of the trial court that the agreement not to do anything to restrict the scope of the claims was intended by the parties to apply only to foreign countries having invalidation, opposition and nullity proceedings and not to countries, such as the United States, having interference proceedings.

Conclusion

We respectfully submit that the Government does not present a single substantial question and that the judgment of the United States District Court for the Southern District of New York should be, in all respects, affirmed.

Respectfully submitted,

WINTHROP, STIMSON, PUTNAM & ROBERTS,
40 Wall Street,
New York 5, New York,
Attorneys for The Singer Manufacturing Company, Defendant-Appellee.

ARTHUR E. PETTIT,
EDWIN J. WESELY,
EDWARD A. MILLER,
Of Counsel.

October 18, 1962

APPENDIX A.

FACTS

Conception, Invention and Development of Singer 401 Machine

A member of Singer's Experimental Department, having previously commenced the development of a completely new household zigzag sewing machine, including a new zigzag mechanism, completed the design of such new machine and new mechanism on April 29, 1953 (Op. 14a). This was prior to the introduction into the market of any sewing machine incorporating a multiple cam mechanism (Op. 16a). This new machine, the 401, was to be Singer's star machine, the top of its line (Op. 21a). In 1959 it represented 45 per cent of the total dollar volume of Singer's entire household sewing machine business in the United States (Op. 21a). Singer spent several years in the development of the 401 machine and by June 1959 had invested $9,000,000 in it, including $4,700,000 for tooling (Op. 14a; Stipulation of Facts, Par. 112, R. 2423). For an understanding of the purpose, intent, motives and attitude of Singer in its various actions in this case, the single most important fact is that Singer so conceived, invented and developed the multiple cam zigzag mechanism which it embodied in its 401 sewing machine.

Singer's negotiations with Vigorelli and Gegauf, the alleged co-conspirators, are to be viewed in the light of the foregoing facts and the fact that such negotiations related almost exclusively, as far as the United States is concerned, to patents and patent applications which covered the basic feature of the multiple cam mechanism invented by Singer and embodied in its 401 machine (Stanford, R. 1263-1264; 401 cam mechanism, Dx. 106B);

namely, a series of rotary cams having a single retractable cam follower, shiftable relative to each other lengthwise of the common cam axis, in order to select a particular cam, for controlling the lateral movement of the needle.* That is the precise feature covered by Gegauf Patent No. 1 (Op. 10a).

The 401 multiple cam mechanism includes an ancillary feature, covered by the Singer United States Johnson patent, consisting of a supplemental follower which may be immobilized or engaged and used to take information from a second cam and combine it with information taken by the primary follower (401 cam mechanism, Dx. 106B; Dx. S-14, R. 2520-2551; Stanford, R. 1263-1267).

Conception, Invention and Development by Singer of Other Zigzag Machines

During the period of the development of the 401 machine, other zigzag machines were developed, manufactured and marketed by Singer. These included the 306 machine, a replaceable cam machine (Op. 14a-15a), and the 319 machine, a multiple cam zigzag sewing machine (Op. 15a). In 1956 the Singer 319 machine was to become Singer's most important machine in the United States (Op. 15a, 20a; Dx. S-24, R. 2584). Manufacture thereof in the United States, however, was discontinued when it was superseded, in June 1957, by the 401 machine (Op. 14a, 15a). The 319 machine continued to be the important machine manufactured and sold abroad,

* In October 1957, less than a month and a half prior to the acquisition of the Gegauf patent application, mention was first made of the fact that a divisional application could be carved out of Gegauf's original application. The circumstances under which at this late date discussions with respect to such possible divisional application arose, and Singer insisted that it receive the entire application, are set forth in the trial court's opinion (Op. 45a, 55a).

selling in 1957 at the rate of 65,000 machines per year (Op. 15a, 62a).

Singer-Vigorelli License Agreement

In September 1953 Vigorelli, an alleged co-conspirator, introduced into the United States a sewing machine with a multiple cam zigzag stitch mechanism which disclosed that Vigorelli almost certainly had anticipated the basic feature of the 401 multiple cam mechanism. In September 1954 Brother International Corporation introduced into the market a Japanese made sewing machine incorporating the multiple cam mechanism of Vigorelli and the Singer 401 machines. In April 1955 Singer learned that Vigorelli had introduced a modified form of its machine (Op. 16a-17a).

The introduction of the Vigorelli machine in September 1953 surprised and shocked Singer and stirred it into action. From that time on Singer continuously sought information as to the extent of Vigorelli or other patents relating to the type of cam mechanism contained in the Vigorelli and the 401 machines to determine whether any such patent could interfere with the manufacture and sale of the Singer machines any place in the world, including the United States. In the process, it sought information throughout the world to determine whether it could limit or destroy claims of patents or patent applications claiming multiple cam zigzag stitch mechanism which might interfere with Singer's machines (Op. 22a-24a, 27a-29a; Stipulation of Facts, Pars. 26, 27, R. 2381-2382; Dx. 4, R. 5171-5173; Dx. 6-9, R. 5182-5190; Dx. 19, R. 5207-5210; Dx. 21-26, R. 5212-5223).

In June 1955 Singer found and succeeded in acquiring a Harris patent, filed June 9, 1952, which did not claim but did disclose, prior to any known use or known patent

priority date, a plurality of rotary cams and a single cam follower for selecting and relating the needle to a particular cam (Op. 24a-25a). Singer hoped that this patent could be re-issued with claims covering a stack of cams with a single cam follower which would cover the Singer, Vigorelli and Brother machines, which would have a priority date earlier than that of Vigorelli in the United States and, depending upon foreign laws, a priority date earlier than Vigorelli in various foreign countries, including Italy (Op. 25a-26a). Singer believed that in any event, with the Harris patent and a re-issue application, Singer might either obtain claims or have claims rejected which would serve as a good indication that no one else could be awarded the claims. Singer knew that whatever the result might be, with the Harris patent in hand it was in a better position to bargain with Vigorelli (Op. 25a-26a). The result was that Singer did file a re-issue application and with the aid thereof did succeed in entering into the cross-license agreement of November 17, 1955 with Vigorelli (Op. 28a).

From the commencement of this action to and including the filing of its final brief the Government's position was adamant that Vigorelli was a co-conspirator. The Government now inferentially attacks the trial court for discussing at length the Singer-Vigorelli cross-license agreement and the facts surrounding its execution, erroneously stating that such discussion related to the "legality" of the agreement (J.S. 6, n. 5). The discussion in fact related to the conspiracy charge. The Government makes this misleading accusation notwithstanding the fact that it argued in its final brief to the trial court that:

> "The relationships and cross licensing agreements which bound Singer, Gegauf and Vigorelli each to the other, provided a fertile media for the subse-

> quent growth of a conspiracy which was aimed at eliminating competition caused by the importation of Japanese made multi-cam machines. * * * The parties in this case, however, were not satisfied to cross license each other and unblock the technology but were determined to go further and eliminate competition." (R. 6377)

Directing itself almost specifically to the above set forth contention of the Government, the Court said:

> "Thus concludes the background against which the license agreement was entered into by Singer with Vigorelli on November 17, 1955. It can hardly be seriously contended that the agreement was a preliminary step to effectuate a conspiratorial plan or an attempt to monopolize. In truth, Singer's back was against the wall in this matter and it was only thru swift and clever tactics that it was able to wrest some sort of victory out of what promised to be total defeat or at best a Pyrrhic victory." (Op. 28a)

The Government having tenaciously clung to the argument that Vigorelli was a conspirator, notwithstanding overwhelming evidence that its participation in such a conspiracy could not have been remotely possible, it seems a bit late for the Government to now indicate, before this Court, that the trial court should have spent less time in laying to rest the Government's contention.

Singer-Gegauf License Agreement

In the course of the negotiations with Vigorelli, Singer heard of a Gegauf patent covering a multi-cam mechanism, which, according to its advice, had been deposited by Gegauf in a small number of countries (Op. 27a, 32a). On October 20, 1955 Singer discovered that the Gegauf patent had been deposited in Switzerland on May 31, 1952 and at the same time it obtained a copy of the corresponding Italian patent, which enjoyed the same date. This date

was nine days earlier than that of the Harris re-issue application (Op. 32a). The fears aroused in Singer for the future of its machines by the discovery of the Vigorelli patent were sharpened by the discovery of the earlier Gegauf patent (Op. 28a).

Gegauf's Italian patent disclosed (1) a stack of cams and a single cam follower which by sliding lengthwise of the axis of the cams could engage any one of such cams and (2) a stack of cams with each cam having its own individual follower (Op. 32a). The first covered the Singer 401 mechanism and the second the Singer 319 mechanism (Op. 14a-15a). In January 1956 Singer, through its continued and extended search, learned that Gegauf had filed a United States application corresponding to the Gegauf Swiss application bearing date May 31, 1952. If the United States application had the same priority date as the Swiss application it would be nine days earlier than the priority date of Singer's Harris patent (Op. 32a). Singer thereupon embarked upon a strenuous campaign, the success of which was absolutely vital to it, to obtain a license under Gegauf's application and any patent to issue thereunder. This was given a strong impetus by advice received that the Harris re-issue claims were allowable (Op. 32a). Singer feared that an interference might be declared between the Harris re-issue application and the Gegauf United States application. Singer felt that because it had knowledge that Gegauf did not have, it was in a better bargaining position than Gegauf. It was most anxious to conclude an agreement, similar to the one it had with Vigorelli, before an interference proceeding would disclose to Gegauf its earlier priority date and accordingly its superior position (Op. 32a-33a). Singer desired to keep Gegauf in the dark as

long as possible and to disclose only what was absolutely necessary to accomplish Singer's plans. Singer, through its Swiss representative, made an arrangement for a conference with Gegauf to discuss "patent questions" (Op. 34a).

The conference was held. The result of the conference was that the Gegauf-Singer cross-license agreement of April 14, 1956 was executed (Op. 34a-36a). In this cross-license agreement Singer licensed only the Harris United States patent and corresponding patents. No mention was made of Singer's Perla or Johnson patent applications because Singer was not anxious to have Gegauf know of them (Dx. 31, R. 5235). By the agreement Gegauf licensed only Gegauf's Swiss patent and corresponding patents (Op. 36a, 38a).

The trial court found that the agreement constituted the entire agreement of the parties; that there was no agreement or understanding about how each would prosecute, license or otherwise restrict its ownership of any patents it might obtain or that eventually Singer would purchase the Gegauf patent (Op. 39a). The trial court further found that the undisputed facts support no conclusion other than that the underlying dominant purpose of the license agreement was to settle the conflict in priority between the Gegauf and Harris patents and to secure for Singer a license right under the earlier patent (which Singer knew would be Gegauf's) in order to free the marketing of Singer's 401 and 319 machines in various countries, particularly in the United States, where enforcement of the Gegauf patent might easily foreclose the market to Singer (Op. 39a-40a).

Singer obtained this agreement without once mentioning to Gegauf even the possibility of an ultimate purchase by Singer of Gegauf's application or any patent

issued thereon (Op. 39a). The first time that a desire on Singer's part to purchase such patent was expressed to Gegauf was in August 1956 at a conference in New York, four months after the execution of the license agreement (Op. 42a). It is indeed hard to conceive how the Government can argue that Gegauf, at the time of the execution of the license agreement, was in a conspiracy to vest its patents in Singer so that Singer could exclude competition in the United States, when at that time mention had not been made of a possibility of selling the patent to Singer. The Government at one time frankly acknowledged that the Gegauf cross-license agreement was not a part of the alleged conspiracy. It then proclaimed:

> "It was after the defendant had acquired royalty-free patent rights that it entered into the conspiracy alleged and attempted to monopolize by acquiring full title to the patents or patent applications under which it had already been licensed." (Plaintiff's Memorandum Relative to Defendant's Proposed Findings, R. 6195)

Singer-Gegauf Assignment

As stated, during the negotiations for the Singer-Gegauf license agreement Singer had not mentioned the possibility of purchasing Gegauf's United States patent application (Op. 39a). After the execution of that license agreement, however, Singer determined that it should acquire, if possible, the Gegauf application.

In August 1956, Gegauf, Jr. visited the United States. While here he called upon Singer representatives at their office in New York City. There the Singer representatives for the first time broached to Gegauf the matter of

Singer's purchasing the Gegauf United States application. At this meeting Singer described to Gegauf the difficulties of enforcing his patent in the United States, including the difficulties arising from the large number of distributors, the size of the United States, the number of judicial circuits, the difficulty of finding out who was selling infringing machines, the impracticality of suing every retailer, and the difficulty of finding and serving the importer of infringing machines (Op. 42a; Stanford, R. 1128-1129). Singer's obvious objective was to impress upon Gegauf that his patent would not be of great value to Gegauf because he, a foreigner, would have great difficulty in overcoming all of these obstacles.

While in the United States Gegauf, Jr. had been surprised and impressed by the number of Japanese machines he had seen at a sewing machine convention (Stanford, R. 1128). In September 1956 Gegauf wrote to Singer favoring the idea of doing something "against Japanese competition" (Op. 43a). Singer, endeavoring to set up a conference at which it could buy Gegauf's application, replied to Gegauf's letter, not, however, necessarily to the specific suggestion in his letter, as the Government wishes this Court to believe, stating that the writer would be in Germany during a specified week and that an arrangement could be reached "equally advantageous to both" (Op. 43a; Gx. 34, R. 3529; Gx. 36, R. 3532). Replying to a letter is quite a different thing from replying to a specific suggestion in such letter. The former can be done while ignoring the latter. The trial court completely rejected the Government's theory that there was any agreement, community of interest or unity of purpose, which of course included rejection of the

Government's contention as to the meaning and significance of those letters, which it fully argued before the trial court (R. 258-259, 961-963).

A conference followed, which the Government does not even mention. It took place September 23, 1956 at Landau, Germany. At that conference Gegauf requested $1,000,000 and refused to budge below a figure of $250,000 for his application. Singer was not willing to pay any such amount and terminated the negotiations (Op. 43a).

Not until September 12, 1957, a year later, did Singer again approach Gegauf, by letter of that date, in the hope of buying Gegauf's United States application (Op. 43a-44a; Gx. 44, R. 3545-3546). In the Government's presentation of this approach (J. S. 8), it is placed in such juxtaposition to the Government's discussion of the September 1956 communications, one year earlier, that one would be led to believe that they were practically concurrent. The Government, as above stated, at the same time, omits any reference to the above mentioned September 1956 conference. With reference to Singer's approach to Gegauf on September 12, 1957, the Government states:

> "In further negotiations Singer pointed out that 'their mutual interests required that something be done to protect themselves from the Japanese infringing machines,[8] and that under the circumstances 'neither was in a position alone effectively to protect its respective patent.'"

The footnote referred to in the above quotation was as follows:

> "[8] The court speaks of 'infringing' machines. However, since at this time and during all but the last 1½ months of the negotiations, no patents had been issued on either Gegauf's or Singer's applications (see n. 4, p. 5, *supra*; n. 9, p. 9, *infra*), there could then be no infringing machines."

Facts

The genesis of Singer's approach in 1957 was that Singer had ascertained that a patent was about to be issued on its Harris re-issue application and believed, in view thereof, that a patent would be issued in the near future to Gegauf on its application. Singer thereupon wrote the letter of September 12, 1957 to Gegauf. It was written under the pretense that Singer sought a conference to discuss enforcement of their respective Gegauf and Harris re-issue patents, "when issued," which Singer indicated would be soon. Singer did not want Gegauf to know at this time that in fact its objective was to try again to purchase Gegauf's application (Op. 43a; Gx. 44, R. 3545-3546; Stanford, R. 1137-1138). In the letter Singer referred to enforcement "when issued" of the two patents "against infringing manufacturers who primarily are manufacturers in other countries . . ." (Gx. 44, R. 3545). It is idle for the Government to contend as it does in its footnote 8, *supra*, that "infringing" manufacturers were not intended because patents had not issued. The letter was written with direct reference to the fact that the two patents were about to be issued and specifically referred to enforcement "when issued." Incidentally, the letter did not refer to "infringing Japanese manufacturers" but referred, as set forth above, to "infringing manufacturers who primarily are manufacturers in other countries." The letter further stated:

> "I think you will agree with me that neither one of us alone can protect himself most effectively."

and

> ". . . , it may be in our mutual interest to resume conversations while I am abroad on this trip." (Gx. 44, R. 3545)

Thus the quotations set forth in the above quoted sentence from page 8 of the Jurisdictional Statement do not appear in the September 1957 letter. The words "mutual interest" were used with respect to a "mutual interest to resume conversations." The words "that something be done" did not appear in this letter but appeared in a letter written in September of the previous year (Gx. 33, R. 3528). The words "to protect themselves from Japanese infringing machines" has no counterpart in the letter. There is in the letter a reference to a discussion, a year before, of "procedures" that might be followed "to enforce" the Gegauf and the Harris patents, when issued, "against infringing manufacturers" (Gx. 44, R. 3545). Instead of the words "neither was in a position alone effectively to protect its respective patent" (J. S. 8) there was a statement that "neither one of us alone can protect himself most effectively." There of course is a meaningful difference. Singer could protect the Harris patent. The trouble was that, since it would not cover the 401 machine, the Harris patent would not protect Singer (Stanford, R. 1263, 1264, 1267, 1268). Singer realized that for an entirely different reason, that is, inability to enforce his patent, Gegauf would not be able to protect himself. Singer therefore by this statement was again stressing the point to Gegauf that Gegauf in Switzerland could not get effective protection from his patent because he would find it difficult to enforce.

Thus, the sentence quoted above from the text of the Jurisdictional Statement (page 8) gives no indication of the statements actually made or of the underlying facts. In any event, the quotations set forth by the Govern-

ment stand as barren quotations, from which the Government asks this Court to find the state of mind, purpose and intent of Singer and Gegauf, the basic facts which the trial court was engaged in ascertaining during the course of the trial, to be directly contrary to that found by the trial court.

Gegauf clearly understood that the September 12 letter related to a proposed conference to discuss enforcement of two specific patents against infringing products of foreign manufacturers inasmuch as Gegauf replied to the letter stating that he would be happy to meet Singer to discuss "mutual enforcement" of its application and the Harris re-issue application against "infringing products of the foreign manufacturers" (Op. 44a).

Singer went to the conference with a form of agreement, and met with the Gegauf people to discuss an agreement, that would give Singer irrevocable title to and "complete ownership" of the Gegauf application which, as Singer expressed it, freed Singer of the necessity of "dealing any further with Gegauf in connection with this general subject." That was the kind of agreement that Singer sought (Op. 44a). At the conference Singer endeavored to give the impression that the subject was not overly important to Singer. The conference ended with Singer believing that an oral agreement had been made for an outright purchase of the application for $40,000 (Op. 44a-45a).

Within a week a Singer representative was reporting that the $40,000 had risen to $125,000, that Gegauf insisted on the right to license three companies and that Gegauf did not wish to convey the divisional claim, a divisional claim which in fact was not filed until December 2,

1957, more than one month later. Singer directed Kirker, its Swiss patent attorney, "to pass the word" to Gegauf that a refusal to assign the divisional claim would almost surely make the agreement impossible as they all along had been discussing the application including any division, and that either standing alone was weak (Op. 45a). The Government's statement on page 8 that Singer insisted on obtaining the divisional application because Singer "felt" that either standing alone was weak is not correct and is squarely in conflict with detailed findings of the trial court as to Singer's reasons for obtaining the divisional application (Op. 55a). Singer was bargaining. It had a reason for acquiring the divisional application, wholly unrelated to any desire to enforce the divisional application, strong or weak, which it did not want Gegauf to know (Op. 55a). The facts are amply covered in the opinion of the trial court (Op. 55a). The Government is asking this Court to substitute the Government's contention as to the meaning and significance of a statement made by Singer, for the trial court's findings of the underlying facts, which completely dispose of the validity of the Government's contention.

A meeting was held between Kirker and Gegauf. The Government's "communicated unity of purpose" theory is based almost entirely on a translated hearsay version of a statement made by Gegauf at this meeting. (The Government's present interpretation of this version, as will be shown, is contrary to the Stipulation of Facts.) With respect to the meeting, Kirker reported that, from the beginning of his interview with Gegauf, Gegauf's position as regards the contemplated agreement with Singer had been considerably altered since a month before

and that it had "considerably hardened" and Kirker set forth numerous increased demands made by Gegauf (Op. 47a-48a; Gx. 56, R. 3567-3570). In his letter Kirker said:

> "Mr. Gegauf explained first that he has no objection against the idea of making an agreement with Singer, in order to stop as far as possible Japanese competitors on the U. S. market but he added that such an agreement might be reached under certain conditions only, which he pointed out as follows: * * *" (Gx. 56, R. 3586).

Gegauf's statement, in whatever form it may have been made, the form in which it appears having come through a translation from German to English by a Swiss citizen, was unilaterally made. Moreover, in the form in which it appears it both is consistent with being, and obviously is, an expression of a bargainer making use of Singer's expressed desire to obtain his patent. In so stating Gegauf was not recognizing or acknowledging any existing or potential agreement or arrangement between Singer and Gegauf relating to the enforcement of a patent. Gegauf's point and purpose were to set forth plainly and forcibly the fact that if he was going to give Singer the power which he conceived Singer wanted, it would have to be done on Gegauf's terms.

The Government earlier had no doubt that Gegauf in fact conveyed that message to Kirker. In Paragraph 79 of the Stipulation of Facts executed by the parties the following is set forth with respect to Gegauf's interview with Kirker:

> "Gegauf explained that while he had no objection to making an assignment of his application by means of which Singer could stop as far as possible Jap-

anese competitors in the United States market, he would do so only upon the conditions which he set forth • • •" (R. 2407-2408).

Paragraph 79 is a stipulation both as to what took place at the Gegauf-Kirker interview and as to what Kirker reported Gegauf had said. It covers both the statement made by Gegauf and the report made by Kirker.

That Gegauf considered that he had no agreement or understanding with Singer and was merely giving to Singer "the possibility to stop" Japanese infringing machines and that he conceived his interests to be different from those of Singer, is clear from his statement in the conference that by giving Singer "the possibility to stop" Japanese infringing machines in the United States, there was a serious drawback for Gegauf in Europe (Gx. 56, R. 3569).

Gegauf's statement has none of the implications now urged by the Government, contrary to its Stipulation of Facts, and the trial court so found.

Upon receiving advice from Kirker as to his interview with Gegauf, Singer decided that Stanford should go to Europe and attempt to conclude the agreement (Stipulation of Facts, Par. 80, R. 2408). A conference with Gegauf was arranged and held on December 4, 1957. After prolonged negotiations (Op. 49a-51a) the Singer-Gegauf assignment agreement, covering both United States applications, and a short form assignment, covering the original application, were executed on December 5, 1957.

The trial court found that these writings were the entire agreement of the parties and that, with the exception of specific limitations contained in the assignment agreement, no agreement was made or understanding

reached by the parties with respect to the licensing, enforcing or use of their patents (Op. 52a).

Actions and proceedings brought by Singer have been directed to the stopping of the sale of machines infringing Gegauf Patent No. 1.

Soon after Gegauf Patent No. 1 was issued, Singer filed two infringement actions against Brother International (Op. 74a), the largest distributor of Japanese sewing machines in the United States, and a subsidiary and sole distributor for Nippon, one of the largest Japanese manufacturers in Japan (Stipulation of Facts, Par. 98, R. 2419). More important, Nippon was the manufacturer of, and Brother was distributor in the United States of, the largest number of machines infringing Gegauf Patent No. 1 (Dx. S-26, R. 2586). Both actions were with respect to the sale of sewing machines infringing Gegauf Patent No. 1 (Op. 74a; Stipulation of Facts, Par. 128, R. 2425-2426). These suits are still pending (Op. 74a; application for stay made by the defendant, Brother, Dx. 124, R. 5499-5509).

In an attempt to obtain a quick judicial determination of the validity of Gegauf Patent No. 1 (Dx. 43, R. 5262; Dx. 44, R. 5263-5264; Dx. 45, R. 5267) Singer brought two additional infringement actions in the United States District Courts in South Carolina against sewing machine retailers (Op. 74a; Stipulation of Facts, Par. 82, R. 2411-2412). Both actions were with respect to the sale of sewing machines infringing Gegauf Patent No. 1 (Op. 74a; Stipulation of Facts, Par. 128, R. 2425-2426). Upon failure of the distributor of the infringing machines to

defend, the actions terminated in consent judgments (Op. 74a; Dx. 43, R. 5262; Dx. 44, R. 5263-5264; Dx. 45, R. 5267).

In January, 1959 Singer instituted a proceeding before the United States Tariff Commission under Section 1337 of Title 19 of the United States Code for the purpose of excluding from the United States all sewing machines infringing Gegauf Patent No. 1. The proceeding related solely to Gegauf Patent No. 1 and machines infringing that patent (Op. 69a-70a). The trial court found that the Tariff Commission proceedings were brought by Singer in a bona fide attempt to obtain protection for its "401" machine by an order excluding *all* unlicensed machines which infringed on Gegauf Patent No. 1 (Op. 73a).

Without exception, each of the infringement actions brought by Singer and the Tariff Commission proceeding were brought with respect to sewing machines that infringed Gegauf Patent No. 1. When such machines also infringed the Harris re-issue patent or the Johnson patent, infringement of such patent was incorporated in the complaint. Except in conjunction with an attempt by Singer to enforce Gegauf Patent No. 1, Singer has not brought any action, commenced any proceeding, or made any attempt to enforce the Harris re-issue patent or the Johnson patent (Stipulation of Facts, Par. 84, R. 2412-2413); and Singer has not at any time brought any action or commenced any proceeding or made any attempt to enforce Gegauf Patent No. 2 or the Perla patent by suit, notice or threat of suit (Stipulation of Facts, Par. 85, R. 2413). Thus, Singer's actions at all times since the issuance of the Gegauf patents have been directed to an attempt to stop the sale in the United States of machines which infringed Gegauf Patent No. 1.

APPENDIX B.

Colloquies Between Government Counsel and the Trial Court in which Government Counsel Stated that the Alleged Conspiracy Related Solely to the Exclusion of Japanese Machines and that the Exclusion of European Importations was Not Part of Such Conspiracy.

MR. ELKINS: * * * We do charge, first and foremost, a conspiracy between Singer and Gegauf, the principal term of which was that Gegauf would assign his United States patent applications to Singer, with the understanding that Singer would use such applications or rather the patents resulting therefrom alone or in conjunction with patents owned or to be owned by Singer in order to exclude competition from persons dealing in the Japanese-made machines.

We described the conspiracy in those terms not because it suits our purpose for any reason but because the evidentiary material is such that it appears that that actually was the substance of the conspiracy.

It appears that the exclusion of Japanese competition was the common ground on which Singer and Gegauf met, and various exhibits have indicated that Gegauf was not interested, at least principally, in having its patents used as against Europeans.

Singer, however, had its own ideas in relation to the European manufacturers. However, as we say, Gegauf did not have European manufacturers on his mind and we are dealing here, of course, with a meeting of the minds on a common objective.

THE COURT: When you say that Gegauf did not have European manufacturers on its mind, do you intend to state that it was no part of the conspiracy that these patents should not be asserted against European importations?

Colloquies

MR. ELKINS: I believe I can answer that, your Honor, directly when I saw that the European importations—

THE COURT: One simple word would answer that; either yes or no.

MR. ELKINS: Well, there is a double negative in that question, your Honor, which is giving me some difficulty.

The European importations into the United States were not a part of the conspiracy. The conspiracy—

THE COURT: So that the conspiracy embraced only the securing of an assignment of the Gegauf No. 1 patent, so that it, coupled with the other patents that Singer owned or had acquired, could be asserted solely and exclusively against Japanese importations which they alleged infringed?

MR. ELKINS: First, it also included as well as Gegauf 1, Gegauf 2, and stating it positively—and I do not think I am changing the question at all—the conspiracy related solely to the exclusion of the Japanese machines. • • • (R. 953-955)

THE COURT: • • • It is the Government's contention that the purpose of all of this conspiracy, and the only thing that there was a meeting of the minds upon, was that these patents should be vested in Singer by assignment so that Japanese importations could be excluded from the United States.

MR. ELKINS: Well, that the patents of Gegauf would be joined with those of Singer, pooled or grouped with those of Singer, for that purpose.

THE COURT: To keep Japanese importations out of the United States.

MR. ELKINS: That's right. To the extent possible by these patents, yes, your Honor.

Colloquies

THE COURT: You don't charge that there was any agreement by Singer to keep out European importations, do you?

MR. ELKINS: That is true, we do not. (R. 988-989)

MR. ELKINS: * * * The Singer license to Sears Roebuck related to a machine made in Germany. We say that the conspiracy between Singer and Gegauf related to Japanese competitors.

THE COURT: But, when Gegauf heard that Singer had done this, had given a license to Sears Roebuck, they screamed to high heaven. They said they screamed because Sears Roebuck might have been their potential customer, but maybe they also screamed because they foresaw the amount of royalties which Singer was about to collect from Sears Roebuck and they had not been declared in on it.

MR. ELKINS: There was nothing that Singer did with Sears, Roebuck which was contrary to the conspiracy between Singer and Gegauf. That conspiracy related to Japanese competition.

THE COURT: Well, there was nothing that Singer did with Sears Roebuck that tended to further this alleged conspiracy either, was there?

MR. ELKINS: That is true. It just wasn't a part of the conspiracy.

THE COURT: So Sears Roebuck has really nothing to do with this case, has it?

MR. ELKINS: Sears Roebuck and the reasons for our citing the documents and the material that we have shows,

indeed, as other material shows—and we are here interested in the accuracy of our contentions—that European manufacturers were not a subject of the conspiracy between Singer and Gegauf. We submit that, if Singer granted a license to a Japanese manufacturer, it would have violated its agreement with Gegauf. We submit that Singer was free to grant a license to Sears Roebuck as long as the machines were coming in from Europe without violating that agreement, and the particular purpose of showing the Sears license and the amount of money that was obtained from it is to show that Singer had not taken the position with Gegauf merely that it would use the patent here in the United States to enforce it for the benefit of itself and Gegauf and Vigorelli. (R. 1000-1002)

MR. ELKINS: Yes. Also, your Honor, the government contends that the attempt to monopolize is not confined to the exclusion solely of Japanese-made machines. The Japanese-made machines, as we tried to point out, was the subject of the alleged conspiracy as between Singer and Gegauf. However, in relation to the attempt to monopolize, it is the government's position that Singer, in acquiring these two patents, did so in order to exclude all imports from the United States of machines having the mechanism involved in the subject matter of those patents, and that it did so to prohibit anybody else from manufacturing such machines in the United States. So that the attempt to monopolize goes out beyond the terms or the substance of the conspiracy.

Colloquies

Gegauf, for example, had no interest, apparently so far as the terms of the conspiracy are concerned, in whether or not Europeans came into the country.

Apparently he, as far as the substance of the conspiracy was concerned, had no interest in whether or not any other United States competitor or potential competitor might be able to manufacture those machines in the United States. However, in relation to the attempt, Singer did. (R. 1648-1649)

APPENDIX C.

Paragraphs 210 to 214, Inclusive, of Defendant's Proposed Findings of Fact and References and Citations Therein Contained (R. 5920-5926).*

Various types of multiple-cam mechanisms which do not infringe Gegauf Patent No. 1 and examples of machines incorporating such non-infringing multiple-cam mechanisms

210. Gegauf patent No. 2,832,302 does not cover a machine-carried multiple-cam zigzag machine, if, to effect a partial or a complete traverse of such machine's series of rotary cams, whereby its single cam-engaging head can be manually engaged with one cam after the other in any desired sequence, the series of rotary cams and the single cam-engaging head are relatively shiftable *radially* rather than lengthwise of the common axis. Examples of such a machine-carried multiple-cam zigzag machine are the Feather Universal TViewer Model FSZ120, the Kyokuto Modern Model No. 116, the Kyokuto Vogue Stitch Model D and the Kyokuto Alden's Cam 3-in-1.

Each of the machines mentioned in the preceding paragraph incorporates therein a series of rotary cams which are concentrically arranged about a common axis and a single cam follower which must be shifted back and forth radially rather than lengthwise of the common cam axis in order sequentially to engage the various cams. (S.F. 94)

The Feather Universal TViewer Model FSZ120, Defendant's Exhibit 113, and the Alden's Cam 3-in-1, Government's Exhibit 207, are machines of the type above set forth.

---

* S.F. refers to the Stipulation of Facts (R. 2364-2441). T. refers to the transcript of the trial proceedings. (Record page numbers are the same as the indicated transcript page numbers.)

Multiple Cam Mechanisms which do not infringe Gegauf Patent No. 1.

(T. 574; Billings, T. 2124, 2153-2155)

The pattern control mechanism of the Feather Universal TViewer machine, Defendant's Exhibit 113, includes a unitary disc having six circular cam surfaces arranged concentrically on one face thereof with the disc being disposed within the machine so as to be rotatable about a vertical axis which coincides with the common cam axis. Cooperating with this disc is a single cam follower adapted to be shifted radially of the common cam axis in order sequentially to engage the various concentrically arranged cam surfaces. The cam disc which is made of a plastic material is removably secured within the machine and can be replaced by other cam discs which are adapted to produce different sewing patterns. Two additional cam discs are provided with the machine.

(Billings, T. 2124, 2149, 2235-2236)

The pattern control mechanism of the Alden's Cam 3-in-1 machine, Government's Exhibit 207, is essentially like that of the Feather Universal TViewer machine, Defendant's Exhibit 113, except that the cam discs of the former has fourteen concentric cam surfaces formed on the top face of the disc while the cam disc of the latter has six concentric cam surfaces formed on the top face of the disc.

(Billings, T. 2217, 2154-2156)

211. Gegauf patent No. 2,832,302 does not cover a machine-carried multiple-cam zigzag machine, if, to effect a partial or a complete traverse of such machine's series of rotary cams whereby its single cam-engaging head can be manually engaged with one cam after the other

Multiple Cam Mechanisms which do not infringe Gegauf Patent No. 1

in any desired sequence, the series of rotary cams and the single cam-engaging head are relatively shiftable through rotation of the series of cams about their common axis rather than being relatively shiftable lengthwise of the common axis. Examples of such a machine-carried multiple-cam zigzag machine are Sankyo Seiki's Consolidated Sewmor Model 770 (New Design), Consolidated Viscount 1959 Model 740, Consolidated Belair 990 (New Design), and Consolidated Vogue Stitch Model 116.

Each of the machines mentioned in the preceding paragraph incorporates therein a single cam follower and a series of cams which are formed as a series of stave-like surfaces about a barrel-shaped cam carrier mounted to turn about its longitudinal axis. The barrel-shaped cam carrier must be manually rotated about its longitudinal axis in order sequentially to engage the single cam follower with the various cams.

(S.F. 95; T. 561-567, 583-584)

The Sankyo Seiki Consolidated Sewmor Model 770 (New Design), Defendant's Exhibit 112, and the Consolidated Vogue Stitch Model 116, Defendant's Exhibit 115, are machines of the type above set forth.

(T. 561-567, 568-573; Billings, T. 2112, 2123)

The Sankyo Seiki Consolidated Sewmor Model 770 (Old Design) machine, Defendant's Exhibit 111, infringes defendant's Geganf No. 1 patent and differs from the Sankyo Seiki Consolidated Sewmor Model 770 (New Design) machine, Defendant's Exhibit 112, only as regards their respective multiple-cam mechanisms.

(T. 559-567; T. 569-570)

Multiple Cam Mechanisms which do not infringe Gegauf Patent No. 1

The ornamental stitch work products of these two machines, Defendant's Exhibits 111 and 112, are essentially the same.

(T. 566-567; Hutton, T. 1311-1312)

The Sankyo Seiki Consolidated Sewmor Model 770 (New Design) machine, Defendant's Exhibit 112, is capable of producing at least fourteen different primary stitch patterns since there are fourteen cam surfaces provided about the barrel-shaped carrier.

(Billings, T. 2112)

212. Gegauf patent No. 2,832,302 does not cover a machine-carried multiple-cam zigzag machine, if such machine is not provided with a manually operable member for withdrawing the cam-engaging head from and radially of a selected cam surface. An example of such a machine-carried multiple-cam zigzag machine is the Borletti New Home Model 1102.

The machine mentioned in the preceding paragraph incorporates therein a series of rotary cams mounted about a common axis and a single cam follower with the series of cams and the cam follower being relatively shiftable lengthwise of the common cam axis under spring pressure to a preselected position without withdrawing the cam follower radially of a cam surface.

(S.F. 96; T. 581-582)

The Borletti New Home Model 1102, Defendant's Exhibit 114, is a machine of the type above set forth.

(T. 581-582; Billings, T. 2101)

213. Gegauf patent No. 2,832,302 does not cover a machine-carried multiple-cam zigzag machine, if such

Multiple Cam Mechanisms which do not infringe Gegauf Patent No. 1

machine's series of cams is provided with a series of cam-engaging heads of which each cam-engaging head is constrained to engage a respective one of the cams of the series of cams rather than with a single cam-engaging head relatively shiftable lengthwise of the common cam axis. Examples of such a machine-carried multiple-cam zigzag machine are the Turissa Novomatic, the Bell-Messerschmitt Models 502 and 603N, the Pfaff Models 260 and 360 (formerly Models 230 and 332), the Gritzner-Kayser White Automatic Model 666, and the Fukoku Vogue Stitch Model 88.

Each of the machines mentioned in the preceding paragraph incorporates therein a series of rotary cams and a series of cam-engaging heads with each cam-engaging head being constrained to engage only one cam of the series of cams and with means whereby the series of cams and the series of cam-engaging heads may be relatively shifted so that the cams may be sequentially engaged one at a time with a respective one of such cam-engaging heads. (S.F. 97)

The Messerschmitt, Defendant's Exhibit 118, the Singer 319, Defendant's Exhibit 110, the Gritzner-Kayser White Automatic Model 666, Defendant's Exhibit 193, and the Sanwa, Government's Exhibit 204, are machines of the type above set forth.

(S.F. 116; Stanford, T. 1209)

214. With respect to the said Sankyo Seiki Consolidated Sewmor Model 770 (New Design), Defendant's Exhibit 112, Feather Universal TViewer Model FSZ120, Defendant's Exhibit 113, Borletti New Home Model 1102,

Multiple Cam Mechanisms which do not infringe Gegauf Patent No. 1

Defendant's Exhibit 114, Consolidated Vogue Stitch Model 116, Defendant's Exhibit 115, and the Alden's Cam 3-in-1, Government's Exhibit 207:

(a) Such machine comprises a household sewing machine which, in addition to straight stitches, produces without artistry on the part of the operator, various ornamental and functional zigzag stitch patterns the preselection of which must be made by the user through a device such as a dial, handle or knob, located on the exterior of the machine, which effects a relative shifting of cam tracking means and a group of machine-carried cams, each having cam configurations different from the other cams.

(S.F. 8-C, 94, 95, 96)

(b) Such machine does not infringe any of the defendant's patents here involved, namely the following U. S. patents:

2,832,302	Gegauf
Re. 24,370	Harris
2,862,468	Johnson
2,877,726	Gegauf
2,810,360	Perla

(S.F. 91, 94, 95, 96, 115, 116, 128, 129; T. 564, 566-567, 574-575, 581-582, 583-584; Billings, T. 2100-2103, 2124, 2153, 2155; S.F. Exs. 18, 22, 23)

(c) Such machine incorporates a machine-carried multiple-cam mechanism which is designed in a manner such that, assuming the same set of circumstances, its manufacture and assembly should be less costly than the manu-

Multiple Cam Mechanisms which do not infringe Gegauf Patent No. 1

facture and assembly of a machine-carried multiple-cam mechanism infringing Gegauf Patent No. 1.

(Billings, T. 2112-2115, 2119-2121, 2123-2124, 2156, 2190-2202, 2205-2207, 2212-2215, 2218-2219; Herbst, T. 2265-2271, 2226-2227, 2307-2308, 2275-2285, 2291-2294, 2299, 2325; Def. Exs. 106B, 200, 201, 202)

(d) Such machine incorporates a machine-carried multiple-cam mechanism which is designed in a manner such that, assuming materials and workmanship of equal quality, the useful life of such mechanism from the standpoint of wear and breakage should be no less than that of a machine-carried multiple-cam mechanism infringing Gegauf Patent No. 1.

(Billings, T. 2140, 2156-2158, 2186, 2232-2235)

(e) Such machine is capable of producing various ornamental and functional zigzag stitch patterns the preselection of which is no more difficult for the operator to effect through the dial, handle or knob provided on such machine than is such preselection with the dial, handle or knob on a machine infringing Gegauf Patent No. 1.

(Billings, T. 2197-2198)

(f) Such machine is capable of producing various ornamental and functional zigzag stitch patterns which, from an artistic and functional standpoint, are comparable to those patterns produced by machines incorporating a machine-carried multiple cam mechanism infringing Gegauf Patent No. 1.

(T. 566; Curreri, T. 2321-2322)

Multiple Cam Mechanisms which do not infringe Gegauf Patent No. 1

(g) Such machine incorporates a machine-carried multiple cam mechanism which is designed and constructed in a manner such that its mechanical efficiency as a medium for controlling the lateral movements of the needle of such machine is not less than that of machine-carried multiple cam mechanisms incorporated in machines infringing Gegauf Patent No. 1.

(Billings, T. 2237-2240, 2243-2245; Curreri, T. 2308-2315, 2327)

APPENDIX D.

Singer-Gegauf License Agreement, Government's Exhibit 26 (R. 3509-3514).

THE SINGER MANUFACTURING COMPANY — DOCUMENTS — D.E. 2028-1

AGREEMENT (Patent) between Fritz Gegauf Aktiengesellschaft, Bernina Nahmaschinenfabrik, Switzerland and The Singer Manufacturing Company of New Jersey

DATED April 14, 1956.

AGREEMENT

THE SINGER MANUFACTURING COMPANY (hereinafter called "SINGER"), a Corporation organized and existing under the laws of the State of New Jersey, United States of America, is the sole owner of Harris U.S.A. Patent No. 2,693,778, filed on the 9th of June, 1952, and of corresponding reissue patent application No. 516,059 as well as the following corresponding Harris patents and patent applications:

	No.	dated:	filed:
British Patent	730,436	May 21, 1953	May 21, 1953
Belgian Patent	520,285	May 28, 1953	May 28, 1953
Canadian Patent	514,053	June 28, 1955	June 6, 1952
French Patent	1,083,582	June 5, 1953	June 5, 1953
Italian Patent	509,535	June 5, 1953	June 5, 1953
Canadian Appl.	688,268		June 22, 1955
German Appl.	H 16,599		June 3, 1953
Japanese Appl.	10,103		June 5, 1953
Swedish Appl.	5,211		June 5, 1953

FRITZ GEGAUF AKTIENGESELLSCHAFT, Bernina Nähmaschinenfabrik, in Steckborn (hereinafter called "GEGAUF"), a Corporation organized and existing under the laws of Switzerland,

is the sole owner of Swiss Patent No. 310,788, filed on the 31st of May, 1952, as well as the following patents and patent applications:

Italian Patent No. 501'172
German Gebrauchsmuster Registration No. 1,707,338
F.G. U.S.A. Patent application No. 358,977 } F.G.
M.L.W. German Patent application No. G 11,654 } M.L.W.

SINGER and GEGAUF realize that interference proceedings are about to be opened in the U.S.A. between the said Harris reissue application and one or more patent applications of GEGAUF corresponding wholly or partly to its above mentioned patents and patent applications.

In view of the foregoing, SINGER and GEGAUF have entered into the following agreement.

1) SINGER and GEGAUF each undertakes, not to do anything, either directly or indirectly and in any country, the result of which might restrict the scope of the claims of the other party relating to the subject matter of the above mentioned patents and patent applications.

SINGER and GEGAUF each undertakes, in accordance with the laws and regulations of the Patent Office concerned, to facilitate the allowance in any country of claims as broad as possible, as regards the subject matter of the patents and patent applications referred to above.

2) SINGER undertakes not to attack GEGAUF, either directly or indirectly, in any country:

a) on the basis of any of its above mentioned patents or patent applications

b) for the present construction of the BERNINA Sewing Machine as shown on the photograph attached to the present agreement and signed on the back by both parties.

F.G.
M.L.W.

3) GEGAUF undertakes not to attack SINGER, either directly or indirectly, in any country, on the basis of any of its above mentioned patents or patent applications.

4) SINGER undertakes not to manufacture or sell a construction which would be a slavish copy either of the present construction of the BERNINA Sewing Machine — taken as a whole — which is shown on the attached photograph, or of the feeler and multiple cams mechanism the said BERNINA construction includes.

5) SINGER undertakes to give to GEGAUF, on request of the latter, the amical assistance of its patent attorneys for the defense of any of the above mentioned GEGAUF patents or patent applications against an action in cancellation.

6) All agreements already concluded by either party and concerning or having a connection with any of the above mentioned patents or patent applications must be communicated to the other party for approval before signature of the present agreement.

7) SINGER, as designated in this agreement, shall be understood as including The Singer Manufacturing Company, Singer Sewing Machine Company, their subsidiary, affiliated and associated companies and customers throughout the world.

GEGAUF, as designated in this agreement, shall be understood as including Fritz Gegauf A.G., Bernina-Nähmaschinenfabrik, its subsidiary, affiliated and associated companies and customers throughout the world

F.G.
M.L.W.

IN WITNESS WHEREOF, the parties have executed this agreement in duplicate in Zurich, this 14th day of April, 1956.

THE SINGER MANUFACTURING COMPANY

By M. L. WATERMAN
Vice-President

WITNESS:
G. E. KIRKER

FRITZ GEGAUF A.G., BERNINA-NAEHMASCHINENFABRIK

By F. GEGAUF

WITNESS:
WILLI

[A photograph of the Bernina sewing machine was attached to the foregoing agreement together with a statement identifying such attachment (R. 3513, 3514).]

APPENDIX E.

Defendant's Exhibit 133 for identification (R. 5547), Submitted and Received as an Aid to the Trial

	Singer-Vigorelli License Agreement	Singer-Gegauf License Agreement
License Provisions	VIGORELLI will not bring any infringement action against Singer under the rights derived from patents now issued or to be issued in any country with respect to subject matter disclosed in U.S. patents No. 2.693.778 and in the U.S. patent applications by Johnson, Serial No. 471.766, and by Perla, Serial No. 386.684, and when embodied in sewing machines manufactured and sold by Singer, copies of which are at disposal for inspection by Vigorelli at the Office of Messrs. Barzano and Zanardo in Milan. SINGER will not bring any infringement action against Vigorelli under the rights derived from patents now issued or to be issued in any country with respect to subject matter disclosed in Italian patents No. 497.557 and No. 507.862 and when embodied in sewing machines manufactured and sold by Vigorelli.	GEGAUF Undertakes not to attack SINGER, either directly or indirectly, in any country, on the basis of any of its above-mentioned patents or patent applications. SINGER undertakes not to attack Gegauf, either directly or indirectly, in any country: a) on the basis of any of its above mentioned patents or patent applications b) for the present construction of the Bernina sewing machine, as shown on the photograph attached to the present agreement and signed on the back by both parties SINGER undertakes not to manufacture or sell a construction which would be a slavish copy either of the present construction of the BERNINA Sewing Machine—taken as a whole—which is shown on the attached photograph, or of the feeler and multiple cams mechanism the said BERNINA construction includes
Opposition and Nullity Provisions	Each of the two parties mutually agree not to institute any opposition, nullity or invalidation proceedings in any country against or otherwise to attack each other's above-noted patents or patent applications and immediately to withdraw any such proceedings if it has already been instituted,	SINGER and GEGAUF each undertakes not to do anything, either directly or indirectly and in any country, the result of which might restrict the scope of the claims of the other party relating to the subject matter of the above mentioned patents and patent applications.
Interference and Conflict Provisions	provided, however, that if such two parties patents and patent applications are or have become involved in a patent office priority-determining proceedings such as a United States interference or a Canadian conflict proceeding, then both parties will work together in order to settle such a proceeding in accordance with the laws and regulations of the patent office concerned and in the spirit of this agreement.	SINGER and GEGAUF each undertakes, in accordance with the laws and regulations of the Patent Office concerned, to facilitate the allowance in any country of claims as broad as possible, as regards the subject matter of the patents and patent applications referred to above.

APPENDIX E.

Defendant's Exhibit 133 for identification (R. 5547), Submitted and Received as an Aid to the Trial Court (R. 921-924).

Singer-Vigorelli License Agreement	Singer-Gegauf License Agreement	Singer-Messerschmitt License Agreement
VIGORELLI will not bring any infringement action against Singer under the rights derived from patents now issued or to be issued in any country with respect to subject matter disclosed in U.S. patents No. 2.693.778 and in the U.S. patent applications by Johnson, Serial No. 471.766, and by Perla, Serial No. 386.684, and when embodied in sewing machines manufactured and sold by Singer, copies of which are at disposal for inspection by Vigorelli at the Office of Messrs. Barzano and Zanardo in Milan. SINGER will not bring any infringement action against Vigorelli under the rights derived from patents now issued or to be issued in any country with respect to subject matter disclosed in Italian patents No. 497.557 and No. 507.862 and when embodied in sewing machines manufactured and sold by Vigorelli.	GEGAUF Undertakes not to attack SINGER, either directly or indirectly, in any country, on the basis of any of its above-mentioned patents or patent applications. SINGER undertakes not to attack Gegauf, either directly or indirectly, in any country: a) on the basis of any of its above mentioned patents or patent applications b) for the present construction of the Bernina sewing machine as shown on the photograph attached to the present agreement and signed on the back by both parties SINGER undertakes not to manufacture or sell a construction which would be a slavish copy either of the present construction of the BERNINA Sewing Machine—taken as a whole—which is shown on the attached photograph, or of the feeler and multiple cams mechanism the said BERNINA construction includes	MESSERSCHMITT Will not bring any infringement action against SINGER under the rights derived from patents now issued or to be issued in any country with respect to subject matter disclosed in Singer's German patent applications No. S.46,453 VII/52a as filed on 23rd November, 1955, and shown in the annexed drawing (Figures 1-62) and No. S.46,580 VII/52a as filed on 2nd December, 1955, and shown in the annexed drawings (Figures 1-13) and when embodied in sewing machines manufactured and sold by Singer. SINGER will not bring any infringement action against Messerschmitt under the rights derived from patents now issued or to be issued in any country with respect to subject matter disclosed in the annexed drawings K1. 52 KE of 14.1.55, K1. 53 of 10.XII.54 and K1. 54 KE of 6.VI.55, and when embodied in sewing machines manufactured and sold by Messerschmitt.
Each of the two parties mutually agree not to institute any opposition, nullity or invalidation proceedings in any country against or otherwise to attack each other's above-noted patents or patent applications and immediately to withdraw any such proceedings if it has already been instituted,	SINGER and GEGAUF each undertakes not to do anything, either directly or indirectly and in any country, the result of which might restrict the scope of the claims of the other party relating to the subject matter of the above mentioned patents and patent applications.	SINGER and MESSERSCHMITT each agrees not to institute in any country any opposition, nullity or invalidation proceedings against or otherwise to attack in any country the other's patents or patent applications corresponding to Messerschmitt's constructions as illustrated in the drawings indicated in paragraph 1 and to Singer's German applications indicated in paragraph 2, and to immediately withdraw any such proceeding if it has already been instituted
provided, however, that if such two parties patents and patent applications are or have become involved in a patent office priority-determining proceedings such as a United States interference or a Canadian conflict proceeding, then both parties will work together in order to settle such a proceeding in accordance with the laws and regulations of the patent office concerned and in the spirit of this agreement.	SINGER and GEGAUF each undertakes, in accordance with the laws and regulations of the Patent Office concerned, to facilitate the allowance in any country of claims as broad as possible, as regards the subject matter of the patents and patent applications referred to above.	provided, however, that if such patents and patent applications are or have become involved in a patent office priority-determining proceedings such as a United States interference or a Canadian conflict proceeding, then both parties will work together in order to settle such proceeding in accordance with the laws and regulations of the patent office concerned and in the spirit of this agreement.

In the Supreme Court of the United States

OCTOBER TERM, 1962

No. 438

UNITED STATES OF AMERICA, APPELLANT

v.

THE SINGER MANUFACTURING COMPANY

ON APPEAL FROM THE UNITED STATES DISTRICT COURT FOR THE SOUTHERN DISTRICT OF NEW YORK

BRIEF FOR THE UNITED STATES IN OPPOSITION TO MOTION TO AFFIRM

Appellee's principal argument in the Motion to Affirm (p. 3) is that the questions presented in the Jurisdictional Statement "are predicated upon facts squarely in conflict with the trial court's findings of fact and present for review substantially all of the trial court's findings and all of the underlying facts upon which they were based." This contention is erroneous and evinces a misunderstanding of the government's position. Therefore, we believe a brief response is warranted.

665639—62

1. The government's contention that Singer combined or conspired with Gegauf to restrain trade in multi-cam sewing machines in the United States and unilaterally attempted to monopolize that market draws its main strength from the undisputed fact that Singer entered into the agreement to acquire patents under which it already had a license for the express purpose, which it communicated to Gegauf, of excluding from the United States market its primary competitors, manufacturers and distributors of Japanese-made machines (*e.g.*, J. St., pp. 15, 16, 18–21). We maintain that this fact—which the district court reiterated throughout the opinion (*e.g.*, J. St. App., pp. 42a–44a, 53a, 73a–74a, 80a)—together with the court's further finding that Gegauf entered into the acquisition agreement for the identical purpose of facilitating the exclusion of the competing Japanese machines from the United States market and thus strengthen its position *vis-a-vis* the Japanese in Europe (*e.g.*, J. St. App., pp. 43a, 47a, 53a), makes out a combination or conspiracy between such competitors to restrain and monopolize trade in violation of Sections 1 and 2 of the Sherman Act. The existence of the combination or conspiracy and its illegality, we submit, follow as a necessary conclusion of law from the facts as found. The same facts, considered in the context of Singer's already dominant economic power in the United States multi-cam market, where it is the sole domestic producer and major domestic seller of such machines and has its own patents covering multi-cam mechanisms (J. St. App., pp. 9a–13a, 17a, 21a; J. St., p. 15), establish a

forbidden attempt to monopolize (see J. St., pp. 9–10, 21; Motion, pp. 23–24), again as a matter of law.[1]

There is no merit, therefore, to appellee's contention that the government is primarily seeking a review of the district court's factual findings. Moreover, the additional facts upon which Singer bases its Motion to Affirm in no way affect our legal argument on the above questions.

(a) Singer alleges that it intended to grant licenses under Gegauf I "if desirable" (Motion, p. 12). This allegation runs counter to the district court's specific finding that "Singer did not intend to license others under its [Gegauf's] patent" (J. St. App., p. 78a; see Motion, p. 11 for Singer's explanation of this finding). In any event, a pooling of patents to restrict competition cannot be validated by the mere possibility that the patentees might, at some time, find it expedient to grant licenses to others. Rather, the critical fact is whether competitors could obtain licenses on reasonable terms if and when they so desired. In upholding the patent pool challenged in *Standard Oil Co.* v. *United States*, 283 U.S. 163, this Court emphasized that the agreements there in question did not restrict the granting of licenses to non-participants in the pool (*id.* at 170, 176 and fn. 12), and that the "available advantages [were] open *on reasonable terms to all manufacturers desiring to participate*" (*id.* at 171, emphasis added). And in *United States* v. *Krasnov*, 143 F. Supp. 184 (E. D. Pa.), affirmed *per*

[1] On the attempt to monopolize issue we rely also on the district court's finding that Singer had a specific intent to bar *all* infringing machines from the United States market (*e.g.*, J. St. App., p. 74a).

curiam, 355 U.S. 5, the district court noted that one of the reasons for its holding that a patent cross-licensing agreement violated the Sherman Act was that defendants refused to grant "rights under the * * * patents to any third parties until they found it necessary to do so" (143 F. Supp. at 199).

(b) Singer suggests that in practical effect there is no combination of patents involved here because, during the period from 1957 to 1959, enforcement of Gegauf I and Gegauf II alone would have resulted in the exclusion of almost the same number of machines as could have been excluded by the Gegauf patents plus Singer's other three patents (Harris reissue and the patents covering the "401" and "319" machines) (Motion, pp. 9–11). For example, it asserts that in 1959 the three Singer patents could have excluded only an additional 800 machines, totaling .0031 of the domestic multi-cam market (Motion, p. 10).

The important point, however, is that these patents do cover multi-cam machines that could be utilized by competing manufacturers as commercially practicable alternatives to those barred from the American market by the Gegauf patents. If it were not for Singer's ownership of the patents covering these alternative devices, and its intention to enforce them, the 800 imported machines not excluded by the Gegauf patents in 1959 might well have multiplied many times over in subsequent years. Thus, the exclusionary power of these patents effectively supplements the exclusionary power of the Gegauf patents and enhances Singer's dominance in the industry.

(c) Singer also urges that there can be no question here of a conspiracy or combination to exclude from the American market any competing machines other than those of Japanese manufacture (Motion, pp. 13–14). This limitation of the scope of the alleged conspiracy cannot benefit appellee, however, since a conspiracy to exclude competitors from a substantial market is no less illegal merely because it is directed toward fewer than all of one's competitors. *E.g., Klor's, Inc.* v. *Broadway-Hale Stores, Inc.*, 359 U.S. 207.

The district court expressly found that Singer sought to exclude from the United States market all infringing machines, not merely machines of Japanese manufacture (J. St. App., pp. 48a, 74a). Moreover, the court's findings, we believe, support the conclusion that Gegauf was advised of this purpose and embraced it (albeit attempting to persuade Singer to refrain from enforcing the patents unilaterally against certain specified European manufacturers) (see J. St. App., pp. 46a–48a, 53a). However, appellee is correct in pointing out that in the district court the government's charge of a combination in restraint of trade—in contrast to its attempt-to-monopolize charge—was, at the time, confined to machines of Japanese manufacture (see Motion App. B, pp. 19a–23a). Accordingly, we concede that the words "and other imported" should be deleted from line 4 of the first question presented in the Jurisdictional Statement (p. 2).

2. The third issue presented in the Jurisdictional Statement is whether the agreement between Singer

and Gegauf that each would (a) refrain from taking any action "in any country" which might restrict the scope of the other's patent claims and (b) undertake to facilitate the granting "in any country" of claims of the broadest possible scope, is illegal under Section 1 of the Sherman Act.[2] The importance of this question is underscored by the enactment on October 15, 1962, subsequent to the filing of the Jurisdictional Statement, of Public Law 87-831 (76 Stat. 958) which requires that settlements in patent interferences be filed with the Patent Office. The announced purpose of this statute is to "make it more difficult for patent applicants and owners to use an interference settlement agreement as a means of secretly violating the antitrust laws." H. Rep. No. 1983, 87th Cong., 2d Sess., p. 1. The House committee which reported out the bill observed (*ibid.*) that "[r]ecent experience

---

[2] The government maintains, and it so argued at the trial, that both aspects of the agreement, letters (a) and (b) above, which are complementary parts of the portion of the agreement numbered "1," are illegal (J. St., p. 22). There is no merit to appellee's suggestion (Motion, p. 32) that the government waived at trial its contention that the second part of the agreement, (b) above, is illegal. In "Plaintiff's Trial Brief" the government expressly attacked both parts of the agreement (Tr. 3367) and in "Plaintiff's Post Trial Brief," although stating that (a) above was "[t]he provision which is unlawful" (Tr. 6423), the government argued at length that the basic vice of the agreement was that it fostered "the allowance of broad claims," the wording of (b) above (Tr. 6424; see Tr. 6426, 6427, 6428, 6431, 6432, 6434). The district court discussed and ruled upon the legality of both parts of the agreement (J. St. App., pp. 36a–37a) and at the outset of its opinion framed the issue in the language of (b) above (J. St. App., p. 2a). See also appellee's arguments to the court below, Tr. 6025, 6026, 6491.

has indicated that parties have sometimes used these interference proceedings in derogation of the public interest, in that interference settlement agreements have been entered into for the purpose of restricting competition." The report quoted a letter from the Department of Justice to Congressman Celler which was expressly "made a part of this report," and which stated among other things (*id.* at 4, *emphasis added*): "Interference settlement agreements have been entered into *for the purpose of obtaining patents as broad as possible in order that they may be used by the parties to eliminate competition.*"[3]

---

[3] In our Jurisdictional Statement we attack as clearly erroneous the district court's finding that the phrase "in any country," as used in (a) above, refers only to certain foreign countries and not to the United States (see J. St., p. 24, fn. 20).

Singer's sole asserted justification for the court's interpretation is that the agreement not to restrict the scope of each other's claims, (a) above, was intended to apply only in countries having "invalidation, opposition and nullity proceedings *in which one may restrict the scope of claims of others*," while the agreement to facilitate the granting of claims of the broadest possible scope, (b) above, was intended to apply only in countries (such as the United States) having interference proceedings (Motion, p. 35, emphasis added). The short answer is that a party to an interference proceeding in the United States Patent Office can succeed in restricting the overall scope of the claims made in his adversary's patent application by proving that the broadest interfering claims in that application are unpatentable. See Patent Office Rules 232 and 233, 37 C.F.R. 1.232, 1.233. Moreover, in two other licensing agreements, Singer demonstrated that when it wished to frame an agreement dealing only with resort to invalidation, opposition, or nullity proceedings (as opposed to an agreement, such as the one here, not to restrict the scope of one another's claims, in any type of proceeding) it knew how to do so in explicit language (see Dx. 133, reprinted in Motion, App. E, p. 37a).

CONCLUSION

This case is of considerable economic importance (see J. St., pp. 14–15; Motion, p. 26, fn. 6), and the appeal presents three substantial legal issues of broad public importance. Probable jurisdiction should therefore be noted.

Respectfully submitted.

ARCHIBALD COX,
Solicitor General.

LEE LOEVINGER,
Assistant Attorney General.

ROBERT B. HUMMEL,
GEORGE R. KUCIK,
LES J. WEINSTEIN,
Attorneys.

NOVEMBER 1962.

U.S. GOVERNMENT PRINTING OFFICE 1962

LIBRARY
SUPREME COURT, U. S.

Office-Supreme Court, U.S.
FILED
NOV 14 1962
JOHN F. DAVIS, CLERK

IN THE

Supreme Court of the United States

OCTOBER TERM, 1962

No. 438

UNITED STATES OF AMERICA,
Plaintiff-Appellant,

v.

THE SINGER MANUFACTURING COMPANY,
Defendant-Appellee.

BRIEF OF THE SINGER MANUFACTURING COMPANY, DEFENDANT-APPELLEE, WITH RESPECT TO STATEMENTS CONTAINED IN THE GOVERNMENT'S BRIEF IN OPPOSITION TO MOTION TO AFFIRM

WINTHROP, STIMSON, PUTNAM & ROBERTS,
40 Wall Street,
New York 5, New York,
Attorneys for The Singer Manufacturing Company, Defendant-Appellee.

ARTHUR E. PETTIT,
EDWIN J. WESELY,
Of Counsel.

IN THE

Supreme Court of the United States

OCTOBER TERM, 1962

No. 438

UNITED STATES OF AMERICA,
Plaintiff-Appellant,

v.

THE SINGER MANUFACTURING COMPANY,
Defendant-Appellee.

BRIEF OF THE SINGER MANUFACTURING COMPANY, DEFENDANT-APPELLEE, WITH RESPECT TO STATEMENTS CONTAINED IN THE GOVERNMENT'S BRIEF IN OPPOSITION TO MOTION TO AFFIRM.

The Government's Brief in Opposition to Singer's Motion to Affirm, in six pages, sets forth 8 statements that are erroneous, misleading or plain misstatements. Each of them is with respect to an important point. We do not herein attempt to make any further argument or answering argument, except as to item 9 below dealing with a new matter raised by the Government in its opposing brief, attempting to limit ourselves to such statements as are necessary to correct or refute the statements so made by the Government.

1. The Government asserts (Br. Opp., p. 2)[1] that its charge of a conspiracy and an attempt to monopolize draws its main strength from the "undisputed fact" that Singer entered into the Singer-Gegauf assignment agreement to acquire Gegauf patents "for the express purpose, which it communicated to Gegauf, *of excluding* from the United States market *its primary competitors*, manufacturers and distributors of Japanese-made machines." (Emphasis supplied) The fact is, and the trial court found, that Singer acquired Gegauf Patent No. 1 for the purpose, and only for the purpose, of excluding sewing machines *infringing* that *specific patent* and that Singer's intention related not merely to Japanese-made machines but to all machines *infringing* that *specific patent* (Op. 52a-53a, 55a, 73a-74a). The Government knows this well and so argues when such an argument suits its convenience (p. 5). Insofar as the Government's statement relates to Gegauf Patent No. 2, it is made squarely in the teeth of a contrary finding by the trial court (Op. 55a).

The Government's statement, however, is not even limited to an erroneous statement as to what the trial court found. It states that the fact asserted by it is an "undisputed fact." An undisputed fact means that Singer does not dispute it. In view of the position taken by Singer throughout this case that Singer acquired Gegauf Patent No. 1 to enforce it against machines infringing that specific patent and that Singer acquired Gegauf Patent No. 2 with the motive and for the purposes set forth by the trial court in its opinion (Op. 55a), it is nothing short of a disregard for the truth to assert that Singer does not dispute the Government's contention.[2]

---

1. Unless otherwise indicated page references are to the Government's Brief in Opposition to Singer's Motion to Affirm.

2. It will be remembered that the facts set forth by the Government in its Jurisdictional Statement were asserted to be "not in dispute" (J.S. 4).

2. The Government asserts (p. 2) that the trial court reiterated throughout its opinion the above set forth "undisputed fact" and cites seven pages of the opinion. Not a single citation supports the statement. The trial court, to the contrary, found that Singer acquired Gegauf Patent No. 1 to enforce it against machines infringing that specific patent (Op. 52a-54a, 73a-74a) and that it acquired Gegauf Patent No. 2 for a purpose wholly unrelated to enforcement (Op. 55a).

3. The Government adds to its alleged "undisputed fact" the assertion that the trial court made a *finding* that Gegauf "entered into" the acquisition agreement "for the identical purpose of facilitating the exclusion of the competing Japanese machines from the United States market and thus strengthening its position *vis-a-vis* the Japanese in Europe" (p. 2). No one of the Government's citations to the trial court's opinion discloses any such finding. No such finding was made by the trial court.

Not once did the trial court state the motivating force or purpose finally inducing or persuading Gegauf to enter into the assignment agreement. Exactly contrary to the statement made by the Government, the trial court expressly found with respect to Singer and Gegauf:

> "It is most striking that, throughout, their dealings were characterized by an absence of unity or identity of *any* common purpose or motive." (Op. 52a; emphasis supplied)

The Government's statement as to the trial court's finding is refuted *in toto* by the findings which in fact are made on pages 52a-53a of the trial court's opinion.

The trial court of course set forth in various places in its opinion quotations of statements made by Gegauf at

various times in the course of bargaining with Singer for the best terms Gegauf could obtain. They were not findings and were not intended as findings as to the motivating purpose or intent with which Gegauf entered into the assignment agreement. One could as well argue that the trial court's finding that Gegauf demanded and received $90,000 in cash was an "express finding" of Gegauf's motive and intent. We think it quite clear that the $90,000 was the motivating force behind, and the purpose for which Gegauf made, the assignment. We do not, however, have the temerity to state to this Court that the trial court "expressly" so found or that it is an "undisputed" fact.

4. The Government attempts to make it appear that the trial court *found* that Singer had a specific intent to bar from the United States not only "all" machines infringing Gegauf Patent No. 1 but "all" machines infringing any of the other four patents, the Harris reissue, Perla, Johnson or Gegauf No. 2. This attempt is made by the process of first referring to the fact that in addition to Gegauf Patent No. 1 and Gegauf Patent No. 2 Singer had "its own patents" (meaning the Harris reissue, Perla and Johnson patents) (pp. 2-3) and then, by footnote (p. 3), stating that the Government, on the attempt to monopolize issue, relies upon the trial court's *finding* "that Singer had a specific intent to bar *all* infringing machines from the United States market," citing the trial court's opinion at page 74a. The trial court, however, was clearly speaking of Singer's attempt to exclude "all" machines *infringing Gegauf Patent No. 1.* There is not the slightest possibility of any misunderstanding of this fact. The trial court was dealing with the Tariff Commission proceeding which related solely to Gegauf Patent No. 1.

The trial court had stated that the Tariff Commission proceeding had been brought by Singer in a bona fide attempt to obtain protection for its 401 machine by an order "excluding *all* unlicensed machines *which infringed on Gegauf I patent*" (Op. 73a-74a; emphasis supplied as to last six words; see also Op. 55a).

The Government thus cites page 74a to support an assertion by it which is completely negated by the material on page 73a, which together with the material on page 74a constitutes a single paragraph.

5. The Government asserts (p. 4) that Singer suggests that in practical effect "there is no combination of patents involved here" because, during the period from 1957 to 1959, enforcement of Gegauf Patent No. 1 and Gegauf Patent No. 2 alone would have resulted in the exclusion of almost the same number of machines as could have been excluded by the Gegauf patents plus Singer's three other patents (the Harris reissue, Perla and Johnson patents[3]). It adds (p. 4) that Singer, for example, "asserts that in 1959 the three Singer patents could have excluded only an additional 800 machines, totaling .0031 of the domestic multi-cam market."[4] The Government is

3. The Government refers to the Johnson patent as a patent "covering" the 401 machine. In fact, Gegauf Patent No. 1 covers the 401 machine and the Government has so stipulated (Op. 40a; Stipulation of Facts, Par. 93, R. 2470). The Johnson patent does not cover the multiple cam mechanism of the 401 machine. It covers only an ancillary feature of the 401 multiple cam mechanism, the use of a second cam follower (Stanford, R. 1203-1205), which could easily be eliminated, leaving Singer with no remedy against a multiple cam mechanism embodying the basic feature of its 401 machine.

4. The Government omits reference to the following information which was set forth by Singer: The Harris reissue, Perla and Johnson patents combined would have excluded no additional machines in 1957, 249 in 1958 and 800 in 1959. The aforesaid number of excluded machines would have represented, respectively, the follow-

confused. If it appeared that a single drop of water had been added to Lake Michigan we would recognize and acknowledge "the combination." We however would challenge every Government assertion that the court "found" or that it was an "undisputed fact" that it would effectively supplement Chicago's water supply.

What Singer said was:

> "It would seem patently absurd to picture Gegauf as conspiring with Singer to get Gegauf's patents into Singer's hands so that it could get the benefit of the additional restraining power of Singer's patents, in combination with its own, when the additional restraining power, supposed to be such a tremendous inducement to Gegauf, consisted of the power to exclude from the United States no machines in 1957, 249 in 1958 and 800 in 1959. This is all the more so when it is realized that there is no evidence that Gegauf ever heard of the Johnson application or the Perla patent and there is evidence that it had not heard of them (Dx. 31, R. 5235)." (Motion to Affirm, p. 11)

The Government waxes enthusiastic (p. 4) over the number of machines which it asserts, without any supporting evidence, *might have been* manufactured using only the ancillary feature of Singer's 401 machine without at the same time infringing Gegauf Patent No. 1. It obviously has no such enthusiasm with respect to the large and rapidly growing quantity of non-infringing multiple cam machines which, as established by the evi-

---

ing portions of the household sewing machine market in the United States and multiple cam machines in such market: In 1957 0 and 0, in 1958 0.00015 and 0.0011, and in 1959 0.0004 and 0.0031 or, in other words, in 1959, 4 out of every 10,000 household sewing machines or 31 out of every 10,000 multiple cam sewing machines (Motion to Affirm, p. 10).

dence, are being manufactured and sold, or with respect to the unlimited quantity of such machines which, as established by the evidence, *could have been* and *now may be* manufactured by any sewing machine manufacturer, including the four manufacturers in Japan who prefer to infringe Gegauf Patent No. 1 (Motion to Affirm, pp. 26-28).

6. (a) The Government asserts (p. 5) that Singer urges that there can be no question here of a conspiracy or combination to exclude from the American market any competing machines other than those of Japanese manufacture. This fails to distinguish between the scope of the conspiracy *alleged by the Government* and the scope of Singer's intent and purpose *as established by the evidence*. It is perfectly obvious on reading Singer's Motion to Affirm, pages 13-14, that we were there referring to the scope of the conspiracy *as alleged and contended* by the Government. We pointed out, and the Government now concedes, that the Government's allegation and *claim* related solely to competing machines of Japanese manufacture. On the other hand, with respect to the scope of Singer's intent, purpose and actions, we pointed out that the evidence and the findings by the trial court establish Singer's intent to exclude only machines *infringing Gegauf Patent No. 1*.

The Government urges that limiting the scope of the alleged conspiracy, by resort to the Government's allegations and contentions, cannot benefit defendant (p. 5). We disagree completely. It obviously benefits Singer, and we submit that it aids this Court, when the Government argues an issue that is involved in the case rather than an issue that is not involved. The Government now

has grudgingly gone part way. It has finally gotten around to using the word "infringing" in isolated instances. It still finds it difficult to refer to machines "infringing Gegauf Patent No. 1." It, accordingly, completely misstates the finding by the trial court when, in the first sentence of the second full paragraph on page 5, it states that the trial court "expressly found" that "Singer sought to exclude from the United States market all infringing machines, not merely machines of Japanese manufacture," citing pages 48a and 74a of the trial court's opinion. There was no such finding by the trial court. Singer's desire, intent and actions were directed to the exclusion of machines *infringing Gegauf Patent No. 1.* The trial court so found (Op. 55a, 73a-74a).

(b) The Government, having argued as above indicated for almost an entire page that the conspiracy alleged by the Government involved machines *other than Japanese-made machines* and having almost convinced itself that the trial court *may* have intended to so find, in the face of the Government's repeated statements to the trial court that the Government made no such charge and that no such conspiracy existed, ultimately concedes that no issue as to machines other than Japanese-made machines is involved in the conspiracy allegation (p. 5). It now concedes that there was no justification for its reference to "other imported machines" in its first question. It apparently does this reluctantly and begrudgingly and without acknowledging that the use of those words was likewise unjustified at pages 15, 18 and 19 of its Jurisdictional Statement. It thus prefers to continue elsewhere the vendetta commenced, but now abandoned, in its first question. Furthermore, the Government would now pretend that the conspiracy charge was

confined to machines of Japanese manufacture "at the time" of the trial. The fact is that the charge was so confined in the complaint and throughout the entire proceedings. It had never been otherwise until the additional claim was injected into the case in the Jurisdictional Statement.

We suggest that while about it the Government might likewise have conceded that it altered the format of a document submitted to this Court (J.S. 6-7; Motion to Affirm, pp. 33-34), and that there is no justification for its statement that a finding of the trial court as to clause 1 of the Singer-Gegauf license agreement conflicted with "documents written by employees of Singer" interpreting such agreement (J.S. 24, n. 20; Motion to Affirm, p. 34). In our Motion we called attention to the fact that the Government neither specified nor cited any such document. In the face thereof the Government refrains from citing or specifying any such document in its answering brief.

7. The Government, in footnote 2, page 6, concedes that in its Post Trial Brief it expressly stated to the trial court that the Government's contention was that "the provision" of the Singer-Gegauf license agreement which was unlawful was the provision contained in the first sentence of clause 1. Its belabored argument now made that this frank concession should be construed into a contention that the second sentence of such clause was unlawful, would be even more difficult to present had the Government chosen to quote the more complete and more explicit statement, and accordingly the statement most devastating to its contention, which it made to the trial court. The Government, in addition to the statement it concedes was made, stated to the trial court that the

"only" phase of the cross-license agreement which the Government contended was unlawful was the agreement not to do anything which might restrict the scope of the claims of the other party (Plaintiff's Memorandum Relative to Defendant's Proposed Findings, R. 6195-6196).

It can thus be seen that the Government acknowledges the statement which it thinks it may best argue away but, so far as the Government is concerned, leaves undisclosed and unquestioned its statement that squarely negates the argument it attempts to make.

8. (a) The Government states that in its Jurisdictional Statement it attacks as clearly erroneous the trial court's finding that the phrase "in any country" as used in the first sentence of clause 1 of the Singer-Gegauf license agreement refers only to certain foreign countries and not to the United States (p. 7, n. 3). The trial court made no finding which related merely to the words "in any country." The trial court made separate findings with respect to two entire sentences. Nor did the trial court find that the words "in any country" referred to "certain" foreign countries, which would imply that definite specified countries were referred to. The first sentence of clause 1 relates to *all* countries having invalidation, opposition and nullity proceedings. And the trial court so found (Op. 36a), stating that the provision of the first sentence was interpreted and intended by Singer and Gegauf to mean that neither would file opposition, nullity or invalidation proceedings against the other's applications "in foreign countries where such special proceedings were known."

(b) The Government asserts that Singer's "sole asserted justification" for the trial court's interpretation is that the agreement not to restrict the scope of each other's claims

was intended to apply only in countries having "invalidation, opposition and nullity proceedings in which one may restrict the scope of claims of others" (p. 7, n. 3). The defendant could not have made more clear its contention that the first sentence of clause 1 was intended to be applicable to all foreign countries having *special proceedings* known as invalidation, opposition and nullity proceedings" (Motion to Affirm, pp. 35-39). Our phrase "in which one may restrict the scope of claims of others" is of course a phrase describing the nature of such special proceedings. It in no way limits or qualifies our statement that the first sentence has reference to and is applicable to special proceedings which exist in various foreign countries to restrict the scope of claims.

The Government asserts that a party to an interference proceeding in the United States Patent Office can succeed in restricting the over-all scope of the claims made in his adversary's patent application by proving that the broadest interfering claims in that application are unpatentable (p. 7, n. 3). The Government knows full well that an interference proceeding is not a proceeding that can be brought by any party interested in restricting the scope of a claim. It is not the counterpart and it is not intended to be the counterpart of the type of proceedings that are available in various foreign countries. One has his say in an interference proceeding only if the Patent Office sets up an interference. In the various foreign countries referred to one brings his own proceeding at his own will in special proceedings designed for that purpose (Court's Exhibit 4, R. 5768-5770).

9. The new matter raised in the Government's Brief in Opposition is its statement (p. 6) that the importance

of its third question is "underscored" by the enactment of Public Law 87-831 (76 Stat. 958). That statute has no significance with respect to this litigation. It is purely a disclosure statute and does not declare any form of agreement to be either legal or illegal. The fact that the Government wrote a letter to a Congressional Committee deemed suitable for its purposes in this litigation, and now attempts to use the letter before this Court, in effect, to lift itself by its own boot straps, is of even less significance.

Respectfully submitted,

WINTHROP, STIMSON, PUTNAM & ROBERTS,
40 Wall Street,
New York 5, New York,
Attorneys for The Singer Manufacturing Company, Defendant-Appellee.

ARTHUR E. PETTIT,
EDWIN J. WESELY,
Of Counsel.

November 14, 1962

INDEX

	Page
Opinion below	1
Jurisdiction	1
Questions presented	2
Statute involved	2
Statement	2
I. The facts	3
A. The nature of the household automatic zigzag sewing machine business in the United States	3
1. Types of household sewing machines	3
2. Singer's position in the domestic multi-cam market and its competition therein	5
B. Singer's agreements with its competitors	8
1. Background	8
2. Vigorelli	9
3. Gegauf	12
C. The aftermath of the agreements	20
II. The decision of the district court	21
Summary of argument	23
Argument:	
I. Singer and Gegauf combined and conspired to restrain trade by excluding their Japanese competitors from the United States in violation of Section 1 of the Sherman Act	26
A. Singer and Gegauf agreed upon concerted acts intended to enable one or both of them to exclude their Japanese competition from the United States market for their mutual benefit	28
1. The background of the Singer-Gegauf relationship	28
2. The Singer-Gegauf cross-licensing agreement	29

678314—63——1

Argument—Continued
I. Singer and Gegauf combined—Con.
A. Singer and Gegauf agreed—Con.
3. The transfer to Singer of the Gegauf patent ..... Page 34
4. Singer's enforcement of the Gegauf patent 37
B. Agreements among holders of competing patents to act together so as to exclude common competitors violate the Sherman Act 39
II. The agreement between Singer and Gegauf to facilitate the issuance to each other of the broadest possible patent claims violated Section 1 of the Sherman Act 49
A. The government did not abandon its contention that the second sentence of the first paragraph is illegal 54
B. The agreement to facilitate the allowance of the broadest possible patent claims was illegal 57
1. The nature of interference proceedings before the Patent Office 58
2. The purpose of Singer and Gegauf in agreeing to facilitate the allowance of each other's broadest possible patent claims was to use such broad patents against the Japanese 61
3. The agreement between Singer and Gegauf not to challenge each other's patent applications violated the Sherman Act 63
Conclusion 70

CITATIONS

Cases:

American Tobacco Co. v. *United States*, 328 U.S. 781 ..... 24, 41
Direct Sales Co. v. *United States*, 319 U.S. 703 ..... 24, 47
Eastern States Lumber Ass'n v. *United States*, 234 U.S. 600 44

Cases—Continued

	Page
Edward Katzinger Co. v. *Chicago Metallic Mfg. Co.*, 329 U.S. 394	64
Ethyl Gasoline Corp. v. *United States*, 309 U.S. 436, affirming 27 F. Supp. 959	26, 40
Interstate Circuit v. *United States*, 306 U.S. 208	26, 44
Klor's Inc. v. *Broadway-Hale Stores, Inc.*, 359 U.S. 207	67
MacGregor v. *Westinghouse Electric & Manufacturing Co.*, 329 U.S. 402	64
Mercoid Corp. v. *Mid-Continent Investment Co.*, 320 U.S. 661	64
National Harrow Co. v. *Hench*, 83 Fed. 36	67
Orion Co., In re, 71 F. 2d 458	38
Precision Instrument Manufacturing Co. v. *Automotive Maintenance Machines Co.*, 324 U.S. 806	63, 68, 69
Solar Electric Co. v. *Jefferson Electric Co.*, 317 U.S. 173	64
Standard Oil Co. v. *United States*, 283 U.S. 163	24, 40, 41
Standard Sanitary Mfg. Co. v. *United States*, 226 U.S. 20	40
United States v. *Besser Manufacturing Co.*, 96 F. Supp. 304, affirmed, 343 U.S. 444	49
United States v. *General Electric Co.*, 272 U.S. 476	65
United States v. *General Electric Co.*, 80 F. Supp. 989	45
United States v. *Hartford-Empire Co.*, 46 F. Supp. 541, affirmed, 323 U.S. 386	66
United States v. *Krasnov*, 143 F. Supp. 184, affirmed *per curiam*, 355 U.S. 5	49
United States v. *Line Material Co.*, 333 U.S. 287, reversing 64 F. Supp. 970	40, 41, 45
United States v. *Masonite Corp.*, 316 U.S. 265, reversing 40 F. Supp. 852	44, 46
United States v. *National Lead Co.*, 63 F. Supp. 513, affirmed, 332 U.S. 319	26, 66
United States v. *Parke, Davis & Co.*, 362 U.S. 29	47
United States v. *Standard Oil Co.*, 33 F. 2d 617, reversed on other grounds, 283 U.S. 163	64
United States v. *United States Gypsum Co.*, 333 U.S. 364	40
Von Clemm, In re, 229 F. 2d 441	38

Statutes: Page

Public Law 87–831, 76 Stat. 958 68

Sherman Act, 26 Stat. 209, as amended, 15 U.S.C. 1, *et seq.*:

Section 1 ..... 2, 3, 24, 27, 28, 34, 42, 45, 66

Section 2 3

Tariff Act of 1930, as amended, 19 U.S.C. 1337:

Section 337 ..... 20, 37, 38

35 U.S.C. 135 59

Miscellaneous:

37 C.F.R.:

§ 1.201(a) 59

§ 1.201(b) 59

§ 1.201(c) 59

§ 1.203(b) 59

§ 1.225 60

§ 1.232 60

§ 1.237 60

§ 1.251 60

§ 1.253 60

§ 1.254 60

§ 1.256 60

§ 1.257 60

§ 1.261 59

§ 1.262 60

H. Rep. No. 1983, 87th Cong., 2d Sess 68

Ladd, *Business Aggression Under The Patent System*, 26 U. Chi. L. Rev. 353 61

Opposition and Revocation Proceedings in Patent Cases, Study No. 4, Subcommittee on Patents, Copyrights and Trademarks, 84th Cong., 2d Sess 61

In the Supreme Court of the United States

OCTOBER TERM, 1962

No. 438

UNITED STATES OF AMERICA, APPELLANT

v.

THE SINGER MANUFACTURING COMPANY

ON APPEAL FROM THE UNITED STATES DISTRICT COURT FOR THE SOUTHERN DISTRICT OF NEW YORK

BRIEF FOR THE UNITED STATES

OPINION BELOW

The opinion of the district court (R. 1653–1717) is reported at 205 F. Supp. 394.

JURISDICTION

Final judgment dismissing the government's complaint in this case was entered on May 17, 1962, *nunc pro tunc* as of May 11, 1962 (R. 1718), and the United States filed a notice of appeal on June 29, 1962 (R. 1719). Probable jurisdiction was noted on December 3, 1962 (R. 1723; 371 U.S. 918). The jurisdiction of this Court is conferred by Section 2 of the Expediting Act, 32 Stat. 823, as amended, 15 U.S.C. 29.

QUESTIONS PRESENTED

1. Whether defendant and a foreign competitor combined and conspired to exclude their Japanese competitors from the United States in violation of Section 1 of the Sherman Act.

2. Whether an agreement between defendant and a foreign competitor to facilitate the issuance to each other of the broadest possible patent claims violated Section 1 of the Sherman Act.

STATUTE INVOLVED

Section 1 of the Sherman Act, 26 Stat. 209, as amended, 15 U.S.C. 1, provides in pertinent part:

> SECTION 1. Every contract, combination in the form of trust or otherwise, or conspiracy, in restraint of trade or commerce among the several States, or with foreign nations, is declared to be illegal: * * *. Every person who shall make any contract or engage in any combination or conspiracy declared * * * to be illegal shall be deemed guilty of a misdemeanor * * *.

STATEMENT

This is a direct appeal from a final judgment of the District Court for the Southern District of New York dismissing a civil antitrust action brought by the United States against The Singer Manufacturing Company ("Singer"). On December 22, 1959, the government filed a complaint (R. 1–7) charging Singer with violating Sections 1 and 2 of the Sherman Act by combining and conspiring with two competitors, Fritz Gegauf, A.G. ("Gegauf") and Arnaldo Vigorelli, S.p.A ("Vigorelli"), to restrain and monopolize, and by unilaterally attempting to monopolize,

trade in household automatic zigzag sewing machines. After trial Chief Judge Ryan dismissed the complaint, holding that a violation of the Sherman Act had not been established.

I

THE FACTS

The case was tried in part on stipulations of fact and in part on documentary and oral evidence. The following statement of the relevant facts is developed primarily out of the stipulations, documents referred to therein, and the findings of the district court.[1]

A. THE NATURE OF THE HOUSEHOLD AUTOMATIC ZIGZAG SEWING MACHINE BUSINESS IN THE UNITED STATES

1. *Types of Household Sewing Machines.* There are two basic kinds of sewing machines manufactured for personal use in the home, *i.e.*, straight stitch and zigzag stitch. The former can sew only a straight line; the latter can produce various ornamental and

[1] "R.—" refers to the printed record in this Court. Citations to the opinion below are designated "Op., R.—". The stipulation of facts is cited to the appropriate paragraph thereof and to the page of the printed record on which it is located (*e.g.*, Stip. ¶5, R. 23). "GX —" and "DX —" refer, respectively, to the government's and defendant's exhibits. References to those parts of the record below which were certified to this Court but not printed are so identified (*e.g.*, Tr. (unprinted) 5800).

At the trial a number of exhibits were appended to the stipulation of facts and numbered S-1, S-2, etc. Some of those exhibits were later also introduced into evidence by the government or defendant and were given a "GX" or "DX" number. Exhibits to the stipulation of facts not independently introduced into evidence by either party are cited by their "S" number (*e.g.*, Ex. S-41, R. 1596). The remainder are referred to by both numbers (*e.g.*, GX 191 (S-25), R. 1334). See R.i, fn*, and xxv.

functional zigzag stitches as well as straight stitches (Stip. ¶¶6, 7, R. 23–24). The latter machines are of three general types (categorized as to their mode of operation): (1) The manually operated zigzag machine—which can produce a zigzag stitch in response to hand manipulation of an exterior handle or lever during the operation of the machine (Stip. ¶8(a), R. 24–25). (2) The replaceable cam machine—which can produce a zigzag stitch only when a cam designed to produce the desired pattern is manually inserted (Stip. ¶8(b), R. 25). (3) The machine-carried (or automatic) multiple cam zigzag machine ("multi-cam")—which can produce any one of a large number of different zigzag stitches in response to the turning of an exterior knob or dial (Stip. ¶8(c), R. 25). The third type, the multi-cam, is the subject of this litigation.

Although the automatic mechanism in each of the several models of multi-cam machines here involved functions in a slightly different manner, all utilize some variant of the same basic principle. Most multi-cam machines contain a number of rotary cams (disks with irregular configurations or undulated surfaces) and an object called a cam follower. When the operator wishes to produce a zigzag stitch he merely moves an exterior lever to a certain preselected position, thereby placing the follower in contact with a particular cam. While so engaged, the follower moves in a manner determined by the shape of the cam selected and the resulting motion is transmitted by means of a linkage to the needle, causing it to move-

laterally and produce a zigzag pattern.[2] See generally, Plaintiff's Summary of Patent Material (Tr. (unprinted) 5798, 5800–5802).

2. *Singer's Position in the Domestic Multi-Cam Market and Its Competition Therein.* With one minor exception[3] Singer is the sole United States manufacturer of household sewing machines and produces both replaceable cam and multi-cam machines, but not the manually operated zigzag (Stip. ¶¶ 9, 10, R. 25–26). Singer's only competition in the sale of its multi-cam and other sewing machines in the United States comes from imports (Stip. ¶ 12, R. 26). In 1959, Singer sold 156,445 multi-cams, amounting to about 61.4 percent of all domestic sales of such machines (GX 190 (S–24), 191 (S–25), 194 (S–28), R. 1333, 1334, 1336).[4] In the same year, 57,732 (about 22.6 percent) were imported from Japan and 40,773 (about 16 percent) from various European countries

[2] The physical differences among the multi-cam mechanisms utilized by the machines here involved consist, in the main, of the number of followers contained therein. Functionally, the distinctions center around whether the cams or the follower(s) are the movable part of the mechanism, and whether more than one follower can be engaged simultaneously with different cams.

[3] The New Process Gear Company, located in Syracuse, New York, manufactures only straight stitch machines on order for a single domestic customer (Stip. ¶ 10, R. 26; Ex. S–11, R. 1607).

[4] This percentage, and those following, are computed from data as to Singer's total *sales* of multi-cam units (GX 190 (S–24), R. 1333) and information as to total *imports* of such machines from Japan (GX 191 (S–25), R. 1334) and Europe (GX 194 (S–28), R. 1336). The record does not show how many imported machines actually were sold in any year.

(*ibid.*). For 1958 the approximate percentages were: Singer (69.6 percent), Japanese (20.7 percent) and Europeans (9.7 percent) (*ibid.*). The share of the market held by the Japanese and European manufacturers in 1958 and 1959 was divided among 8 and 9 companies, respectively (Ex. S–18, S–21, R. 1619–1620, 1622).

Singer's domestic sales of multi-cam machines amounted to more than $45 million in 1958, and $46 million in both 1959 and 1960; in each of those years such sales constituted around 45 percent of Singer's total United States sales of all types of sewing machines (GX 190 (S–24), R. 1333). In its complaint to the United States Tariff Commission, (Ex. S–11, R. 1602; see *infra*, pp. 20–21) Singer categorized its multi-cam machine as its "most important product."

The domestic distribution of Singer's machines is handled by its wholly owned subsidiary, Singer Sewing Machine Company (Stip. ¶ 9, R. 25).[5] Of the approximately 1,950 retail outlets for Singer sewing machines, all but about 270 are directly operated by that subsidiary (*ibid.*). "With the Singer machines, there is no bargaining about price in an outright sale" (Op., R. 1669). Thus, in 1958 and 1959, Singer's "319" multi-cam machine retailed throughout the country for $260 and the "401" multi-cam model sold

[5] Besides this sales subsidiary and its domestic factories, Singer owns and controls an electrical company which manufactures parts for its sewing machines as well as other products, a lumber company which owns timber lands, lumber mills and sewing machine cabinet factories, and a research and development company (Ex. S–11, R. 1599–1600). In addition, Singer manufactures and sells various types of sewing machines in many foreign countries (Stip. ¶ 9, R. 25–26).

for $300, or $340 if purchased with a carrying case (GX (S–24), R. 1333; Stip. ¶¶123, 142, R. 64, 72).[6]

Multi-cams imported from Japan and Europe are sold throughout the United States by independent retailers who order them directly from foreign manufacturers or distributors, or purchase them from local wholesale distributors who import them or obtain them from importers (Stip. ¶¶98, 99, R. 60, 61; see Ex. S–17, S–20, R. 1618–1619, 1621).[7] Most of the retailers selling foreign-made machines "fix their own list prices for machines handled by them" and also determine "the actual prices at which they sell such machines" (Stip. ¶143, R. 72). There is price competition among the various retailers of any particular foreign-model multi-cam machine, in addition to that among different type machines (see Ex. S–87, S–90, R. 1633–1634, 1641–1642; GX 197 (S–86), R. 1338–1339; Stip. ¶¶146, 147, 148, R. 73–74, 75–76).

The retail list prices of Japanese-made multi-cams range from about $90 to $340; these machines can be purchased from approximately $90 to $220 and at various intermediate prices, *e.g.*, $120, $150, $170 (Stip. ¶146, R. 73). European models may likewise be purchased at a discount (list prices range from about $250 to $400; selling prices vary from around $230 to $400 (Stip. ¶146, R. 73–74)), but customers generally "can bargain a greater amount off list price

[6] Presently Singer manufactures and sells only the "401" model in the United States, but it continues to produce and sell the "319" abroad (GX 190 (S–24), R. 1333; Stip. ¶ 19, R. 29).

[7] Some of the wholesale distributors are exclusive outlets for, or subsidiaries of, particular foreign manufacturers (Stip. ¶¶98, 99, R. 60, 61).

for Japanese-made machines than can be bargained off list price for European-made machines" (Stip. ¶143, R. 72). Singer has stated (Ex. S–11, R. 1604) that the wholesale prices of Japanese-made multi-cams "are far below any price which can be set by Singer." The district court noted that "Japanese made machines * * * because of their lower price were in substantial competiton with Singer" (Op., R. 1715), and found that the "principal threat to the Singer machine came from the Japanese imports not from European production" (Op., R. 1710).

B. SINGER'S AGREEMENTS WITH ITS COMPETITORS

1. *Background.* Zigzag sewing machines for industrial use were developed prior to 1900. The first zigzag machine manufactured for home use was Singer's manually-operated "206" model. The "206" was made by Singer in Germany from 1934 until World War II, and was sold to home users outside the United States from 1934 to 1951 (Stip. ¶14, R. 26–27). In 1948 shipments of an Italian Necchi manually-operated zigzag machine were made to the United States and "by 1951 sales of such machines commercially demonstrated that a definite market in a household type zigzag sewing machine existed in the United States" (Stip. ¶15, R. 27). In that same year, 1951, Singer first began to import its "206" model into this country from Scotland, where manufacture had begun in 1949 (Stip. ¶14, R. 27).

In September 1953 Vigorelli, an Italian manufacturer of sewing machines, introduced the first multi-cam machine into the United States, and a year

later the importation of Japanese models by Brother International Corporation ("Brother") commenced (Stip. ¶¶ 21, 22, R. 29, 30). During this period Singer was developing, and had filed patent applications on, two distinct types of multi-cam machines, its "319" and "401" models, which were not marketed until 1956 and June 1957, respectively (Stip. ¶¶ 17, 19, R. 27, 28, 29).* Singer itself recognized, and the district court found (GX 141, 142, R. 1207, 1210; Op., R. 1705), that Singer was "'behind the procession' of industry development and production in the zigzag field."

2. *Vigorelli.* While developing its multi-cam machines Singer conducted investigations in various countries to determine if there were any outstanding patents or pending patent applications in those countries that could prevent it from manufacturing and marketing the machines (Stip. ¶¶ 20, 23–27, R. 29, 30–32). By 1955 Singer had concluded that Vigorelli would dominate both the "319" and "401" machines in many foreign countries, and "it had no assurance that others might not do the same in the United States even if Vigorelli did not" (Stip. ¶ 26, R. 31–32).

During its investigations Singer discovered a United States patent issued to a Canadian named Carl Harris, which had been filed on June 9, 1953, "prior to any use or patent priority date then known to Singer" (Stip. ¶27, R. 32). Believing that this patent could

*The "401" machine is disclosed in Singer's "Johnson" patent (U.S. Patent No. 2,862,468); the "319" is disclosed in its "Perla" patent (U.S. Patent No. 2,810,360) (Stip. ¶¶ 17, 19, R. 28, 29).

be reissued with added claims of the type incorporated in the "401", "319", Vigorelli, and Brother machines, and, if so reissued, would "dominate" those machines, Singer purchased it from the Canadian inventor for $8,000 (GX 3 (unprinted) Tr. 3449).[9] Although Singer's patent position was thereby somewhat strengthened, Singer was anxious to negotiate with Vigorelli "to find some basis of agreement that would be mutually advantageous, rather than to litigate" (GX 4, R. 1022; see Stip. ¶32, R. 34). Mr. Lightner, then president of Singer, instructed the director general of Singer in Italy to begin negotiations with Vigorelli, stating (GX 4, R. 1023) that while Singer could use its patents and patent applications to "make trouble for Vigorelli" it would be preferable and "would greatly strengthen and broaden the patent situation if our position and theirs could be pooled by some mutual agreement."

On November 17, 1955, Singer entered into a non-exclusive, world-wide, royalty-free, cross-licensing

[9] In conjunction with its purchase of the United States Harris patent, Singer acquired corresponding Harris patents and patent applications in several foreign countries (Stip. ¶30, R. 33).

The purchase was negotiated in June 1955 by Stanford, the head of Singer's patent department, who told Harris that he was associated with a firm of Canadian patent attorneys (who actually represented Singer in Canada) and was acting for an undisclosed principal. The patent was actually assigned by Harris to Peter Kirby, a lawyer associated with the firm. (GX 3 (unprinted), Tr. 3443-3450.) The application for reissue of the patent was filed in the names of Kirby and Harris (GX173 (unprinted), Tr. 3892). The actual assignment of the Harris patent to Singer was made seven months later, in February 1956, and Singer's interest in the patent was revealed to the Patent Office when that assignment was then recorded (GX 173 (unprinted), Tr. 3951).

agreement with Vigorelli relating to two of Vigorelli's Italian patents, Singer's Harris patent and its Johnson and Perla applications (GX 11 (S-2), R. 1032; see Stip. ¶ 34, R. 35). This agreement provided that neither party would bring an infringement action against the other "in any country," [10] nor would either institute against the other "any opposition, nullity or invalidation proceedings in any country" (GX 11 (S-2), R. 1033-1034). It further provided that if the parties became involved in a proceeding before a patent office to determine priority "such as a United States interference or a Canadian conflict proceeding," they would settle it in accordance with the laws and regulations of the patent office concerned (GX 11 (S-2), R. 1034). After the agreement Singer withdrew its opposition to a Vigorelli patent application in Brazil (GX 14, R. 1039), and in June 1958 Vigorelli abandoned a United States interference between its application and Singer's Johnson application (Stip. ¶¶ 108, 109, R. 62). The Johnson patent issued on December 2, 1958 (Op., R. 1660).[11]

[10] In a letter from the Singer patent department to the general manager of Singer in Germany, this provision was construed as applying "in any country of the world" (GX 13, R. 1037).

[11] On April 16, 1957, Singer entered into a cross-licensing agreement with Messerschmitt, A.G. (GX 86 (S-4), R. 1146; see Stip. ¶59, R. 44), which contained a provision—"identical to that found in the Vigorelli agreement" (Op., R. 1701)—relating to the parties' conduct before patent offices. The purpose of this agreement was to resolve conflicts in several countries between Singer's applications covering its "319" machine and similar applications of Messerschmitt (see Stip. ¶¶ 47, 50, 52, 56, R. 40, 41, 42, 43). In May 1957 Singer purchased Mes-

3. *Gegauf.*[12] About one month before entering into the cross-licensing agreement with Vigorelli, Singer discovered that Gegauf, a Swiss sewing machine manufacturer which sold in competition with Singer in the United States and foreign countries, also had deposited multi-cam patent applications in a number of countries (Stip. ¶35, R. 35). In January 1956 Singer learned that Gegauf had pending in the United States a patent application with a priority date "nine days earlier" than Singer's Harris patent (Stip. ¶36, R. 36). Knowing that the claims in its Harris reissue application were about to issue, Singer assumed that the Patent Office would declare an interference between the Gegauf and Harris applications and that Gegauf would probably "be entitled to the broad claims" (Stip. ¶37, R. 37; GX 16, R. 1042).

Singer thereupon undertook to work out a cross-licensing agreement with Gegauf, "along the lines of the Vigorelli-Singer agreement," prior to the declaration of an interference (Stip. ¶37, R. 37; GX 16, R. 1043). Despite Gegauf's advantage flowing from the earlier priority date, Singer considered itself

serschmitt's United States patent application (GX 96 (S-5), R. 1159) but was unsuccessful in obtaining an assignment of corresponding foreign patent rights, which the court found it considered "worthwhile 'if of any value to restrict Japanese especially Brother'" (Op., R. 1703, 1704; GX 88, R. 1149). In July 1957 an interference between the United States Perla application and Messerschmitt's United States application was dissolved because both were then owned by Singer (Stip. ¶62, R. 44). The Perla patent issued on October 22, 1957 (Op., R. 1660).

[12] Gegauf is sometimes referred to in the record by its trade name, "Bernina" (see R. 111-112).

to be in good bargaining position because it could use the Harris reissue application during the interference, to oppose the final allowance to Gegauf "of the broad U.S. claims" covering multi-cam machines (*ibid.*).[13] At this time, Singer also discovered that Gegauf and Vigorelli had cross-licensed each other under an agreement "similar to the Singer-Vigorelli agreement" (Stip. ¶38, R. 37).

Singer and Gegauf then entered into negotiations for a cross-licensing agreement (see Stip. ¶¶39, 40, R. 38–39). One of Singer's negotiators, Mr. Waterman, then a Singer vice-president, reported, *inter alia*, on his meeting with Gegauf (GX 24, R. 1062; see Op., R. 1680):

> Gegauf's big fear is that the Japanese machines coming into the United States will be sold at a lower price than his machines will be because of their low-price labor. I think his fears are well-founded, and we did not do anything to cause them to be other than along the line that he was thinking, because one of the strong points of our argument for the agreement between our two companies is in order to

[13] Mr. Stanford, the head of Singer's patent department, wrote (GX 16, R. 1042-1043):

"[A] United States patent interference proceeding is a long and complicated affair during which each party has an opportunity to attempt to block the ultimate allowance of the interfering claims to the opponent party. The outcome of such an interference cannot be predicted with certainty. In other words, assuming that Bernina has filed * * * an application in the United States, then our Harris reissue application is of value to us as a means for opposing the final allowance to Bernina of broad U.S. claims covering multiple-cam ornamental machines."

> fight against this Japanese competition in their building a machine that in any way reads on the patents of ourselves and of Bernina which are in conflict.

Gegauf also feared that if certain prior patents were called to the attention of the patent offices in various countries, including the United States, Gegauf's claims might be limited or invalidated, and Singer "let them [Gegauf] know that we thought we could knock out their claims but that in so doing we were probably going to hurt both of us" (Stip. ¶40, R. 38–39; GX 24, R. 1063–1064). Thereafter, on April 14, 1956, Singer and Gegauf entered into a world-wide, non-exclusive, royalty-free, cross-licensing arrangement. This took the form of an agreement by each not to "attack" the other "either directly or indirectly in any country" on the basis of Singer's listed patents and patent applications in the United States and nine other countries, and Gegauf's listed patents and patent applications in the United States, Switzerland, Germany and Italy (GX 26 (S–3), R. 1066–1067; see Stip. ¶41, R. 39).

In addition, this agreement provided (GX 26 (S-3), R. 1066–1067):

> Singer and Gegauf realize that interference proceedings are about to be opened in the U.S.A. between the said Harris reissue application and one or more patent applications of Gegauf corresponding wholly or partly to its above mentioned patents and patent applications.
>
> In view of the foregoing, Singer and Gegauf have entered into the following agreement.

1) Singer and Gegauf each undertakes not to do anything either directly or indirectly and in any country, the result of which might restrict the scope of the claims of the other party relating to the subject matter of the above-mentioned patents and patent applications.

Singer and Gegauf each undertakes, in accordance with the laws and regulations of the Patent Office concerned, to facilitate the allowance in any country of claims as broad as possible, as regards the subject matter of the patents and patent applications referred to above.[14]

Later in April Vigorelli arranged a meeting between it and Singer, at which it suggested that since they and Gegauf "had arrived at certain agreements they should thereafter act in concert against others" (GX 27 (S-7), R. 1069; Stip. ¶ 64, R. 45). Singer rejected this suggestion but advised Vigorelli's patent attorney, Majnoni, that if Singer owned Gegauf's patents it could prosecute them "better perhaps than Gegauf could" (Stip. ¶ 64, R. 45; GX 27 (S-7), R. 1070). Majnoni, who felt that "it would be advantageous to all parties" if Singer owned the Gegauf United States application, thereafter, in response to Singer's intimation, raised the question of assignment with Gegauf (Stip. ¶¶ 65, 66, R. 45, 46). As a result of Majnoni's efforts (see GX 31, 32, R. 1075, 1078) a

[14] The interference that subsequently developed between the Singer and Gegauf cross-licensed applications was settled outside of the Patent Office, with Singer abandoning the interference on March 15, 1957 (Stip. ¶¶ 68, 71, 102, R. 46, 47, 61). The Harris reissue patent (U.S. Patent Re. No. 24,370) issued on October 8, 1957 (Op., R. 1660).

conference on assignment of the patent application was held in September 1956 between Gegauf and Singer, but negotiations ended because Gegauf refused to sell for less than $250,000 (Stip. ¶¶ 66, 70, R. 46).

About one year later, Singer again approached Gegauf regarding the proposed assignment. Waterman informed Gegauf that "proper enforcement" of the Singer and Gegauf patents might necessitate "patent suits against each of the importers in the United States, of whom there will perhaps be many," and pointed out "that neither one of us alone can protect himself most effectively" (GX 44, R. 1090–1091; see GX 43, R. 1089; Stip ¶ 73, R. 47). Gegauf replied that it was interested in discussing "mutual enforcement" of the parties' patents "against infringing products of the foreign manufacturers" (GX 45, R. 1092; Op., R. 1687).

After a conference in October 1956 at which Singer believed it had reached an agreement with Gegauf to purchase the application for $40,000 (Stip. ¶ 76, R. 48), the latter informed Singer for the first time that it had broken down its United States application into two parts (the second of which was known as a divisional application), and that it did not wish the assignment to include the division (Stip. ¶ 77(1), R. 48).[15] Gegauf also proposed two additional conditions: (1) that any legal actions brought by Singer against Europeans on patents issuing out of the as-

[15] The basic application ultimately issued as U.S. Patent No. 2,832,302 ("Gegauf I"); the division issued as U.S. Patent No. 2,877,726 ("Gegauf II") (Op., R. 1660).

signed application should first be consented to by Gegauf; and (2) that it receive $125,000 for the assignment (Stip. ¶77(2), 77(3), R. 48–49). Singer then made clear that it was interested only in purchasing the whole "application including divisions", since either standing alone was "weak" (Op., R. 1688; GX 50, R. 1097; see Stip. ¶¶ 77, 78, R. 49).

At the next conference, held in November, Gegauf significantly altered its position. While still asking for $125,000, Gegauf notified Singer that it "had no objection to making an assignment of [its] application by means of which Singer could stop as far as possible Japanese competitors in the United States market," provided that Singer would not manufacture a copy of the Bernina machine, and that Gegauf could sublicense one unspecified European company (Stip. ¶ 79, R. 50). Responding to Gegauf's argument that $125,000 was a cheap price, since by granting licenses it could "get every year many times more than the single payment of $125,000" (*ibid.*), Singer's representative pointed out that "it was not right to compare what Bernina [Gegauf] could get for a license to what Singer would pay for being in a better position for acting against common competitors" (GX 56, R. 1107). Gegauf's other fear—that if the Japanese were stopped in the United States they "would run to Europe"—was countered by Singer's assertion that "a greater risk was run in Europe if Singer were not permitted to first stop infringements in the United States" (Op., R. 1691).

After receiving a report on the above conference, Mr. Lightner, then president of Singer, drafted a

policy memorandum for Mr. Stanford, who was to go to Europe and negotiate the final agreement. This memorandum (Stip. ¶ 80, R. 51–52) stated, *inter alia,* that:

> The main purpose of Mr. Stanford's trip will be to obtain such control of the Gegauf patent applications in the United States as will put us in a position to own and control it in order to get the very best patents and bar import or U.S. production of mechanisms which would violate these patents.
>
> * * * * * *
>
> * * * While [$125,000] may seem high, yet over the years ahead the payment of such a price may well be justified by our having the ability to stop import of very low priced multi-cam machines, not only as a result of the help that we would have in the U.S. market in preventing such import, but also because inability to enter the U.S. market may discourage some people from entering the field, and raise unit costs in the case of those who do produce such machines for other markets.
>
> * * * * * *
>
> If Bernina is to continue to have the right to send machines into the United States and if they consider that right important, they may very well see the wisdom of enabling us to stop other imports from Europe as well as those from Japan.
>
> * * * * * *

During the negotiations Gegauf restated its fe that giving Singer the means to stop Japanese imports would divert such machines to the European markets, where Gegauf's primary interests lay.

Stanford, on Singer's behalf, set forth the common interest of the two concerns in stopping the Japanese. He reported that he "took the position that the United States was really the first line of defense and that if the Japanese were permitted to flood the United States market with ornamental stitch machines of the Bernina or Class 401 type they would become so strong and production would be so great that they would enter the European market in a stronger position" (GX 62, R. 1118). Accordingly, Gegauf was persuaded that "possibly it would be better to give Singer an opportunity to try to cut down the importation of multiple-cam machines into the United States," and negotiations proceeded to the questions of (1) licensing other European manufacturers in the United States, (2) licensing Gegauf in the United States, and (3) price (GX 62, R. 1119).

In the resulting agreement, dated December 5, 1957, Gegauf assigned all rights in its United States patent application and division to Singer for $90,000 (GX 58 (S–10), R. 1108; see Stip. ¶81, R. 54). Singer granted back to Gegauf a non-exclusive, royalty-free license to sell its machines in the United States and agreed not to make "a slavish copy" of the Bernina machine (GX 58 (S–10), R. 1109–1110). Singer also agreed not to institute legal proceedings to enforce the patents, when issued, against Pfaff in Germany or against Vigorelli in Italy without the approval of Gegauf (*ibid.*).

The report of Singer's patent department for 1957 emphasized that Singer's patent position was strengthened by the Gegauf assignment (GX 67, R. 1130).

The report stated that "[p]atents issuing on this application grouped with other Company patents should put Singer in a better position in any attempt to prevent others from importing into the United States multiple cam machines of the Singer Class 401 type" (*ibid.*). Later, in July 1958, Gegauf wrote Singer: "you intend to proceed against the Japanese on the basis of your patents and ours" (GX 66, R. 1128).

C. THE AFTERMATH OF THE AGREEMENTS

When the patent on Gegauf I issued Singer instituted two actions against Brother; the first charged infringement of that patent and the Harris reissue patent, while the second was based on the Johnson patent alone (Stip. ¶ 82(1), R. 54). These actions are presently pending (*ibid.*). Singer also brought infringement actions against two other importers of Japanese multi-cam machines (Sewing Machine Exchange and ACO Appliance Distributing Company), which terminated in consent judgments in its favor (Stip. ¶82(2), 82(3), R. 54–55). The latter company is enjoined from selling any machine embodying the inventions covered by Singer's Harris reissue, Gegauf I, and Johnson patents, while the injunction against the former only applies to machines covered by Harris and Gegauf I (*ibid.*).

In January 1959 Singer instituted a proceeding before the United States Tariff Commission, under Section 337 of the Tariff Act of 1930, as amended, 19 U.S.C. 1337, for the purpose of excluding from the United States all imported machines—Japanese and European—coming within the claims of Gegauf I (Stip. ¶82(4), R. 55). The proceeding could only have

been brought by an American manufacturer such as Singer and could not have been initiated by Gegauf. During the proceeding Singer came to believe that the Tariff Commission doubted the truth of Singer's statements that Pfaff was not licensed under the Gegauf 1 patent. While Pfaff was not in fact licensed, Singer's assignment agreement with Gegauf provided that Singer could not sue Pfaff for infringement without Gegauf's consent. To eliminate this impediment to a favorable result in the tariff proceedings, Singer prevailed upon Gegauf to delete from the assignment agreement Pfaff's name and all references to Pfaff. The sole motive and reason prompting this deletion was found to be that Singer might thereby have a better chance of prevailing before the Tariff Commission (Op., R. 1709–1710). The tariff proceeding has been stayed pending the outcome of the present case (Op., R. 1707).

II

THE DECISION OF THE DISTRICT COURT

The district court held that Singer neither conspired with Gegauf and Vigorelli to restrain trade in multi-cam sewing machines, nor unilaterally attempted to monopolize such commerce[16] (Op., R. 1717). It also held that the agreement between Singer and Gegauf that each would assist the other in obtaining the broadest patent claims possible was not illegal under the Sherman Act.

[16] We do not now challenge the district court's holding that Singer did not unilaterally attempt to monopolize commerce. We do not, however, concede the correctness of the district court's decision on this point.

In finding that there was no conspiracy in restraint of trade, the district court emphasized that Singer, Gegauf and Vigorelli had an attitude toward each other of "suspicion, wariness and self-preservation" (Op., R. 1693), and that with respect to Singer's acquisition of the Gegauf patent, "[n]either party was eager for the agreement finally made" (Op., R. 1694). It found that "Singer was not concerned with the effect [of competition] upon Gegauf in Europe as long as it did not affect Singer products in the United States," while Gegauf, whose "prime interest was the protection of its machine in Europe from Japanese infringements * * * gave but little weight to what might happen to Singer in the United States so long as Singer's danger did not affect Gegauf in Europe" (Op., R. 1693). Therefore, the court held that the alleged conspirators' dealings lacked "unity or identity of any common purpose or motive," and accordingly did not amount to a conspiracy (*ibid.*).

Considering the provisions in the cross-licensing agreement under which each party undertook, as to the listed patents and patent applications, (1) "not to do anything to restrict the scope of the claims of the other in any country," and (2) "in accordance with laws of the particular Patent Office, [to] facilitate the allowance to the other in any country of claims 'as broad as possible'" (Op., R. 1681), the court concluded that the provisions were neither conspiratorial acts nor themselves unlawful.

SUMMARY OF ARGUMENT

I.

Just as the owners of two competing patents cannot agree together that neither will license a particular competitor or class of competitors, they cannot engage in a course of concerted conduct intended to further their joint purpose of eliminating common competitors. In the present case Singer and Gegauf agreed together upon acts intended to enable one or both of them to exclude their Japanese competition from the United States market for their mutual benefit. They entered into a cross-licensing agreement one purpose of which was found to be "to obtain protection against the Japanese machines which might be made under the Gegauf patent" and which, to effectuate that purpose, provided that each would assist the other in obtaining the allowance of patent claims as broad as possible. When it became evident that Gegauf could not enforce its patent in this country as effectively as Singer could, Gegauf agreed that their common purpose of excluding the Japanese required the transfer of the Gegauf patent application to Singer. Upon the issuance of the Gegauf patent, Singer was then able to bring infringement proceedings against the Japanese and instituted a proceeding before the Tariff Commission to exclude all infringing imports. During this proceeding Singer and Gegauf again cooperated to amend their prior assignment of the patent rights to improve

Singer's chances before the Tariff Commission, in order to facilitate the exclusion of their common competitors.

The Sherman Act, which is bottomed on the belief that each competitor must compete separately, does not permit such a combination of the efforts and legal powers of two competitors in order to exclude a third. See *Standard Oil Co.* v. *United States*, 283 U.S. 163; *American Tobacco Co.* v. *United States*, 328 U.S. 781. The district court erred in concluding that the concerted acts of Singer and Gegauf did not constitute a combination and conspiracy in restraint of trade because of the arms-length character of each separate transaction. Singer and Gegauf conspired together by pursuing a common exclusionary purpose through concerted acts whenever the opportunity for such action presented itself. *Direct Sales Co.* v. *United States*, 319 U.S. 703. Moreover, the agreement to assign the Gegauf patent applications—which was made possible by the common purpose of excluding the Japanese and was intended to increase the power of Singer to accomplish this result for the benefit of both—was in itself a combination and conspiracy in restraint of trade.

II

The provision in the cross-licensing agreement between Singer and Gegauf by which each undertook to facilitate the allowance to the other of the broadest possible patent claims not only was an integral part of the illegal combination and conspiracy but itself violated Section 1 of the Sherman Act. This agreement was made in contemplation of the anticipated

interference proceeding between the Singer and Gegauf patents, and the parties undertook not to oppose each other in such proceeding.

The basic purpose of an interference proceeding before the Patent Office is to determine priority between competing claims to the same invention. The junior applicant may not only attempt to show that his invention was actually first in time, but may also attack the patentability of the invention sought by the senior applicant, or seek to narrow his claims. Since interference proceedings are one of the few phases of Patent Office procedure which are contested rather than *ex parte*, the development in such proceedings of all facts bearing upon the validity and scope of the claims sought provides an important check upon the granting of invalid patent monopolies.

When Singer entered into the agreement with Gegauf, it was aware that "no one party can or will corner the broadest patent protection" (GX 16, R. 1044), and the parties undertook to facilitate the allowance of each other's broadest possible claims in order more effectively to "fight against this Japanese competition" (GX 24, R. 1062). Singer and Gegauf each would have had a valid commercial reason for attempting to narrow the other's claims and, had it not been for this agreement, each independently might have attempted to do so. The concerted action of Singer and Gegauf to help each other in obtaining broad patents for use against their common enemy, the lower-priced Japanese machines, constituted an unreasonable restraint of trade.

ARGUMENT

I

SINGER AND GEGAUF COMBINED AND CONSPIRED TO RESTRAIN TRADE BY EXCLUDING THEIR JAPANESE COMPETITORS FROM THE UNITED STATES IN VIOLATION OF SECTION 1 OF THE SHERMAN ACT

While the owner of a lawfully acquired patent may use it to exclude his own competitors he may not agree with another patent owner that neither will license a particular competitor or class of competitors. As Judge Rifkind stated in *United States* v. *National Lead Co.*, 63 F. Supp. 513, 524 (S.D.N.Y.), affirmed, 332 U.S. 319: "where there is a refusal to license * * * which is the product of agreement or conspiracy, on the part of the owners of competing patents, I believe, the law is offended to the same extent as the law is violated when several combine and agree not to do business with a particular customer or class of customers." See also, *Interstate Circuit* v. *United States*, 306 U.S. 208, 231, applying a similar rule where the restraint was on trade in copyrighted motion pictures; *Ethyl Gasoline Corp.* v. *United States*, 309 U.S. 436, 455–456, affirming 27 F. Supp. 959, 965–966 (S.D.N.Y.). In the present case the owners of competing patents, Singer and Gegauf, engaged in a course of concerted conduct that—although not involving specific agreements to refuse to license competitors—was intended to further their joint purpose of excluding their common competitors, the Japanese, from the United States

market for automatic zigzag sewing machines. It is our contention that such concerted efforts to exclude common competitors are not protected by the patent laws and are prohibited by the Sherman Act whether or not they involve a specific agreement to refuse to license the competitors.

The district court did not hold that a combination or conspiracy between Singer and Gegauf to help each other use their competing patents to exclude the Japanese would be legal. It held only that there was no such combination or conspiracy as is required for a violation of Section 1 of the Sherman Act because the only agreements between Singer and Gegauf were the three it had found: a cross-licensing agreement, an assignment agreement, and an agreement in aid of Singer's Tariff Commission proceeding. We do not contend that there was any agreement, express or implied, in addition to these three agreements found by the district court. And we accept the district court's findings as to the motivations of Singer and Gegauf in entering into each agreement. We submit, however, that the district court applied a plainly erroneous standard of law in holding that repeated joint action motivated by a common purpose to exclude competitors, such as the district court itself found in this case, does not constitute a combination or conspiracy in restraint of trade forbidden by Section 1 of the Sherman Act. We believe that this question is solely one of law.

We shall first review the extent and nature of the concerted actions of Singer and Gegauf as stated in

the findings of the district court and, occasionally, supplemented by undisputed documents of record. We shall then show that such joint action violates Section 1 of the Sherman Act as a matter of law.

A. SINGER AND GEGAUF AGREED UPON CONCERTED ACTS INTENDED TO ENABLE ONE OR BOTH OF THEM TO EXCLUDE THEIR JAPANESE COMPETITION FROM THE UNITED STATES MARKET FOR THEIR MUTUAL BENEFIT

1. *The background of the Singer-Gegauf relationship*

The background of the Singer-Gegauf transactions has been detailed in the Statement above and in the district court's opinion. Long before Singer began marketing an automatic multi-cam zigzag sewing machine in the United States in 1956 and 1957, although after Singer's employees had designed the Singer "319" and "401" machines, both the Japanese and the Italians entered this field commercially. In September 1953 the Italian firm of Vigorelli introduced into the United States a multi-cam sewing machine, the basic idea of which was the same as that involved in the later-marketed Singer "319" and "401" designs. In September 1954, Brother introduced a Japanese multi-cam machine which, like the later-marketed Singer "401," incorporated the basic idea of many multi-cam machines—a cam follower that could be engaged with any one of a number of rotary cams.

Singer correctly suspected that at least some of its competitors had invented and applied for patents upon the basic mechanism of the automatic multi-cam machine before it. Singer therefore began a

careful and extensive investigation of the filings of competitive patents and applications throughout the world, and soon found that the Italian firm, Vigorelli, had obtained an Italian patent on the basic idea of both the Singer "319" and "401" in January 1953, before Singer had even designed or invented its competitive machines. Singer initially responded to this threat by purchasing for $8,000, through dummy intermediaries, a still earlier patent it had found in its investigations, which belonged to a Canadian inventor named Harris. Singer had reason to believe that if it could have this purchased patent reissued in a broader form, as it later did, it might have the power to exclude even those competitors who had invented and marketed the basic idea of the automatic multi-cam machine long before Singer. But Singer was unsure of whether its broadened claims for the Harris patent would relate back to the date Harris obtained the patent and thus dominate Vigorelli's claims, and so it entered into a cross-licensing agreement with Vigorelli.

2. *The Singer-Gegauf cross-licensing agreement*

Against this background Singer's continuing relationship with Gegauf began. In January 1956 Singer learned that Gegauf had filed a United States application which Singer feared would dominate every patent Singer owned or had applied for (including the purchased Harris patent) as well as the Vigorelli patent. Singer was once again placed on that parity with its Japanese competitors which it had attempted to escape by purchasing the Harris

patent; both were in danger of being excluded as infringers by Gegauf. It therefore began negotiating with Gegauf for an agreement that would serve the twofold end of insuring it against exclusion and obtaining the exclusion of its Japanese competitors as infringers either of Gegauf I (hereafter called the Gegauf application or patent) or of its own Harris patent. The district court thus found that Singer had two purposes in negotiating with Gegauf in 1956. Its "underlying, dominant and sole purpose" (Op., R. 1683–1684):

> * * * was to settle the conflict in priority between the Gegauf and Harris patents and to secure for Singer a license right under the earlier patent in order to free the marketing of its "401" and "319" machines in various countries, particularly in the United States where enforcement of the Gegauf patent might very easily have foreclosed the market to Singer. As to this Singer had much to lose for Singer had spent considerable money developing these machines.
>
> And, we find that Singer had a secondary purpose; it was the only one disclosed to Gegauf, and in fact the very one used to convince Gegauf of the advisability of entering into an agreement. It was Singer's desire to obtain protection against the Japanese machines which might be made under the Gegauf patent; this sprang from a fear which Singer had good reason to believe to be well founded.

We acknowledge that the first purpose was entirely legitimate and that a simple agreement between Gegauf and Singer to cross-license each other would

have been a valid step in fulfillment of that purpose. However, the Sherman Act forbids effectuation of the second purpose—to facilitate by cooperative conduct the exclusion of competitive Japanese machines falling within the scope of the Gegauf patent application. The Sherman Act does not permit competitors to take concerted action to exclude their common competitors. This plainly was both the purpose and the intended effect of that part of the cross-licensing agreement which involved promises that each would help the other obtain patent grants as broad as possible.

During negotiations for the cross-licensing agreement Gegauf informed Singer that it feared competition in the United States from the "lower priced" Japanese machines (Op., R. 1680). Singer did nothing to dispel this fear because "protection against the Japanese" was "one of the strong points" in favor of reaching an agreement (*ibid.*). It informed Gegauf it "could knock out" Gegauf's claims in the United States and elsewhere but that "in so doing" both of them "were probably going to [be] hurt" (GX 24, R. 1063–1064). Singer played upon "Gegauf's big fear" of competition in the United States from lower priced Japanese machines and urged, as "one of the strong points of [its] argument" for the license agreement between the two companies, the necessity of being able "to fight against this Japanese competition in their building a machine that in any way reads on the patents of [Singer] and of Bernina [Gegauf] which are in conflict" (GX 24, R. 1062).

The license agreement of April 14, 1956, between Gegauf and Singer (GX 26 (S–3), R. 1066–1068)

reflects the fruits of the mutual purpose of both parties to strengthen and broaden each of their patents so that at least one of them could exclude the Japanese competitors. The agreement contained six operative paragraphs. Paragraphs 2 and 3 constitute the cross-licensing agreement proper: in form, an agreement not to attack the other company on the basis of a number of listed patents and applications. In paragraph 4, Singer agreed not to make a "slavish" copy of Gegauf's sewing machine and, in paragraph 5, Singer agreed to give Gegauf "the amical assistance of its patent attorneys for the defense of any of the above mentioned Gegauf patents or patent applications against an action in cancellation" (*ibid.*). Paragraph 6 contained a promise to disclose any other agreements concerning the enumerated patents or applications (*ibid.*). None of these provisions in any way served significantly to further what the district court found to be Singer's secondary purpose and "the very one used to convince Gegauf of the advisability of entering into an agreement": "Singer's desire to obtain protection against the Japanese machines which might be made under the Gegauf patent." This common purpose of Gegauf and Singer was plainly intended to be effectuated by paragraph 1, the only remaining operative provision of the agreement.

Both Singer and Gegauf were aware that any conflict between them as to the validity or scope of each other's patents might result in the narrowing or invalidation of these patents to the principal benefit of their Japanese competitors. Claiming to be able

"to knock out" Gegauf's claims, Singer had pointed out to Gegauf that this would only hurt both of them. In the first sentence of paragraph 1, the parties agreed "not to do anything, either directly or indirectly and in any country, the result of which might restrict the scope of the claims of the other party relating to the subject matter of the above mentioned patents and patent applications" (GX 26, R. 1067). The second sentence in paragraph 1 stated that "each undertakes in accordance with the laws and regulations of the Patent Office concerned, to facilitate the allowance in any country of claims as broad as possible, as regards the subject matter of the patents and patent applications referred to above" (*ibid.*). We refer to the second sentence alone, for it was this provision that the district court found was intended to apply to patent proceedings in the United States. The relationship of this provision of the agreement to the shared purpose of excluding the Japanese which, the district court found, Singer used to convince Gegauf to enter into the entire agreement is plain: paragraph 1 of the cross-licensing agreement was intended to make certain that either Singer or Gegauf or both would obtain a patent broad enough to prevent further importations from Japan. It was, moreover, pointedly given effect by Singer in the Fall of 1956 and the Spring of 1957 when Singer abandoned an interference proceeding the United States Patent Office had declared between Singer's Harris application and the Gegauf application after calling to Gegauf's attention that it (Singer) was acting pursuant to their

license agreement so that the prevailing party could secure a patent (Op., R. 1686).

The affirmative undertaking by Singer and Gegauf "to facilitate the allowance in any country of claims as broad as possible" constituted an agreement between two competitors to combine their activities before the United States Patent Office in order to secure from that office patent claims broad enough to eliminate mutual competitors. As we shall show in Point II below, such an agreement, even though the parties effect their purpose without transgressing the specific rules of the Patent Office, is itself a violation of Section 1 of the Sherman Act. It was not, however, the end of the cooperative efforts of Singer and Gegauf to eliminate their joint competitors, the Japanese.

3. *The transfer to Singer of the Gegauf patent*

Although immediately after signing the first Singer-Gegauf agreement in April 1956 Singer had declined an invitation from Vigorelli to act in concert with that firm and Gegauf against joint competitors, and had explained its view that the best thing was "for each one to prosecute his own patents and take care of any cases of infringement that might appear" (Op., R. 1684), Singer very soon came to believe that there was reason for Gegauf and itself both to be dissatisfied with the protection they were receiving against their Japanese competitors. At Singer's request, within two months of the conclusion of the first Singer-Gegauf agreement, Vigorelli undertook to convince Gegauf of the desirability of assigning its

application to Singer "for broader protection in the United States by Singer's invoking the Harris and Gegauf patents" (Op., R. 1685–1686). Vigorelli threatened Gegauf that its German patent might be invalidated by a United States patent that Vigorelli would bring to light unless Gegauf agreed to the assignment (*ibid.*).

The district court's opinion makes absolutely clear that no one had any doubts as to who was the common enemy whose competitive threat must be met by shifting the strongest patent, embodied in the Gegauf application, to the hands of the company best able to enforce it, Singer. Having been approached by Singer directly in August 1956, Gegauf wrote Singer in September "favoring the idea of doing something 'against Japanese competition' in the United States. Singer replied that an arrangement could be reached 'equally advantageous to both' * * *" (Op., R. 1686). Negotiations were suspended for a year, then resumed in September 1957 at which time Singer's representative, Waterman, approached Gegauf and, as the opinion below notes, pointed out that since their respective patents "were about to issue, their mutual interests required that something be done to protect themselves from the Japanese infringing machines. Waterman also, quite correctly, pointed out that, under their license agreement, neither was in a position alone effectively to protect its respective patent" (Op., R. 1686–1687). Bargaining over price was apparently severe. Gegauf, which originally had asked far more for its

patent,[17] was induced to sell for $90,000 by Singer's arguments as to the anticompetitive benefits to Gegauf of transferring to Singer the right to enforce the patent. "Singer continued 'to drive home the point' that Gegauf stood to benefit more by enforcement of the patents in the United States because the 'Brother Pacesetter' machine, a big selling and patent infringing Japanese-made machine, was in direct competition with the Gegauf machine, for both machines were of the free arm type" (Op., R. 1692). Throughout these negotiations Gegauf understood that the central purpose of a second agreement with Singer was "to stop as far as possible Japanese competitors in the United States market" (Op., R. 1689), although Gegauf's primary interest in its result arose from Gegauf's anticipation that this would discourage Japanese competition in Europe.

At long last, in the words of the district court, Singer's repeated appeals to Gegauf's interest in facilitating the exclusion of the Japanese "apparently reached home" (Op., R. 1692) and the parties arrived at an agreement the primary purpose and effect of which was to shift the power of enforcing the patent to the party better able to undertake this task, Singer. The predominance of this purpose is made clear by the absence of other significant effects. In place of

[17] Gegauf assigned its patent rights to Singer for only $90,000 despite its belief that by granting additional licenses thereunder it could gross "many times more" than $125,000 per year (Stip. ¶79, R. 50). From the one license Singer granted under the Gegauf patents to Sears Roebuck Company it received $192,330 in royalties in two years (Op., R. 1706), more than double the purchase price.

Singer's being licensed under a patent owned by Gegauf, it was now agreed that Gegauf would be licensed under the same patent owned by Singer. Singer, the district court found (Op., R. 1714), never intended to issue any additional licenses under the Gegauf patent, so its sole purpose and achievement in obtaining the patent was the acquisition of power to exclude its long-time competitors from Japan. It is true that Gegauf gave up the power to license other companies to sell within the United States, but even this change in position was minimized by the retention of a power, in effect, to sub-license Vigorelli of Italy and Pfaff, a German firm. The substance of the second Singer-Gegauf transaction corresponded closely to its sole purpose. It enabled Singer—the best qualified of Singer, Gegauf, and Vigorelli—to enforce the strongest patent, Gegauf's, against the common threat, the Japanese.

4. *Singer's enforcement of the Gegauf patent*

Singer did not delay in giving effect to the above purpose. When the Gegauf patent issued, Singer filed two infringement actions against Brother, the largest domestic importer of Japanese machines, based on the Gegauf I, Harris reissue, and Johnson patents (Stip. ¶ 82(1), R. 54). It also instituted actions based on the above patents against two other distributors of Japanese multi-cams, which terminated in consent judgments in its favor (Stip. ¶ 82(2), 82(3), R. 54, 55). In addition, Singer brought a proceeding before the United States Tariff Commission, under 19 U.S.C. 1337, for the purpose of obtaining an order excluding

from the United States all imported machines coming within the claims of the Gegauf patent (Stip. ¶ 82 (4), R. 55).[18]

Although there is no evidence that the parties discussed these advantages prior to the transfer of the Gegauf patent, the Tariff Commission proceedings demonstrate the exceptional benefits to Singer and Gegauf which resulted from transferring to Singer the power of enforcing the Gegauf patent. These proceedings, which would eliminate all imports infringing the Gegauf patent at one stroke, could be brought only by an American manufacturer[19] and there is authority[20] that in such proceedings the validity of the Gegauf patent (which Singer had earlier agreed not to question before the Patent Office) is not subject to challenge by the excluded parties. The joint benefits of the tariff proceeding must have become apparent at least while the proceeding was in progress. The continuing cooperation of Singer and Gegauf to exclude their Japanese competitors was then demonstrated when Singer and Gegauf agreed to amend the terms of the last Singer-Gegauf agreement, eliminating Gegauf's right to sublicense Pfaff under the Singer-owned Gegauf patent, in order to

[18] The latter action and the two suits against Brother are presently pending (Op., R. 1707, 1711).

[19] Actions under Section 337 must be brought to prevent unfair competition the effect of which is substantially to injure an industry "efficiently and economically operated, in the United States, or to prevent the establishment of such an industry, or to restrain and monopolize trade and commerce in the United States" (19 U.S.C. 1337(a)).

[20] *In re Von Clemm*, 229 F. 2d 441 (C.C. P.A.); *In re Orion Co.*, 71 F. 2d 458 (C.C. P.A.).

give Singer "a better chance of prevailing before the Tariff Commission." (Op., R. 1709.)

B. AGREEMENTS AMONG HOLDERS OF COMPETING PATENTS TO ACT TOGETHER SO AS TO EXCLUDE COMMON COMPETITORS VIOLATE THE SHERMAN ACT

We believe that both the record and the district court opinion make entirely clear that Singer and Gegauf, motivated by a common desire to exclude their Japanese competitors from the United States, discussed and agreed upon concerted acts which could best effectuate this mutual purpose—first by broadening their individual powers of exclusion and then by shifting Gegauf's United States application to Singer, which was better situated to enforce it against the Japanese. The district court's decision was in no way bottomed on a view of the facts different from that we have just stated.

The Sherman Act prohibits the holders of competing patents not only from agreeing together to refuse to license common competitors but also from acting in concert for the explicitly and repeatedly stated purpose of increasing the power of one or of each individually to exclude common competitors. The Sherman Act is premised upon the belief that competition is best protected by requiring each seller to compete without the assistance of any other seller in the commercial struggle against competitors of both. Survival of a sufficient number of competitors and thus of competition itself depends upon requiring competition to be conducted on an individual basis. The combined powers of two competitors directed at excluding a third from any market poses an intolerable threat to the maintenance of competition.

The Court has already made clear that the antitrust laws severely limit the concerted activities in which patentees may engage. See *e.g., United States v. United States Gypsum Co.*, 333 U.S. 364; *Ethyl Gasoline Corp.* v. *United States*, 309 U.S. 436; *Standard Sanitary Mfg. Co.* v. *United States*, 226 U.S. 20. In *Standard Oil Co.* v. *United States*, 283 U.S. 163, where the government challenged the legality of a pool of patents[11] covering oil cracking processes, Mr. Justice Brandeis, writing for the Court, noted the general rule that "[w]here domination exists, a pooling of competing process patents * * * is beyond the privileges conferred by the patents and constitutes a violation of the Sherman Act. The lawful individual monopolies granted by the patent statutes cannot be unitedly exercised to restrain competition" (*id.* at 174). He held that a violation had not been established, however, because the agreements in question did not restrict the granting of licenses to non-participants in the pool (283 U.S. at 170, 176 and fn. 12), and the "*available advantages are open on reasonable terms to all manufacturers desiring to participate*" (*id.* at 171, emphasis added). Finding that "the four primary defendants owned or licensed, in the aggregate, only 55% of the total cracking capacity, and the remainder was distributed among twenty-one independently owned cracking processes" (*id.* at 175), the Court concluded that the challenged agreements did not result in monopoly, or a restriction of competition,

[11] "The words 'patent pool' are not words of art." *United States* v. *Line Material Co.*, 333 U.S. 287, 313, fn. 24. Here, as in *Line Material*, *supra*, the expression is used "to convey the idea of a linking of the right to use patents issued to more than one patentee."

in the business of licensing the patented cracking processes or in the production or sale of cracked gasoline (283 U.S. at 175–179). In sum, the Court there found that a patent pool was saved from illegality because there was neither dominance of the industry by the participants nor an intention to exclude. Here, in contrast, the Singer-Gegauf combination involves both dominance and a plain purpose to exclude. See *United States* v. *Line Material Co.*, 333 U.S. 287, 313, where the Court interpreted the Standard Oil decision as holding that a patent pool is illegal "if a purpose or plan to monopolize or restrain trade is found."

The illegality of this combination would be clear even in a case not involving the great exclusionary power of broad patents. Thus this Court indicated in *American Tobacco Co.* v. *United States*, 328 U.S. 781, 803–804, that it was unlawful for the three largest cigarette manufacturers, which were in competition with lower priced brands, to join in buying up cheaper tobacco leaves than they themselves would use for the purpose of raising "the price of such tobacco to such a point that cigarettes made therefrom could not be sold at a sufficiently low price to compete with the petitioners' more highly advertised brands." Similarly, two department stores expanding into suburban shopping centers could not agree together to help each other find and occupy suburban locations for the purpose of keeping those locations out of the hands of a third, price-cutting competitor. Nor could they, upon finding their original effort inadequate, agree to transfer a particular location from one to the other for the purpose of placing the stronger competitor in a position to eliminate the

competition of their common threat, the price-cutting third competitor. Nothing in the patent laws gives Singer and Gegauf any greater right to cooperate in their efforts to exclude the Japanese, for such cooperation was in no sense a necessary part of their agreements to reconcile their competing patent claims.

Neither Singer nor Gegauf could have effectively excluded their Japanese competitors under the Gegauf patent without the continuing cooperation of the other. First, the Gegauf patent itself might have been narrowed or invalidated had Singer not agreed to refrain from attacking it and to facilitate the allowance in the United States of claims "as broad as possible." Singer itself indicated that it could defeat the Gegauf application, although both would be hurt by such action (Op., R. 1680). Second, Gegauf could not have excluded the Japanese effectively under the United States patent that would issue on its application. Tens of thousands of Japanese multi-cam machines were sold in the United States each year and only Singer could and would effectively eliminate this competition. The Tariff Commission proceedings, which could be brought only by Singer, furnish an example of Singer's advantage in this regard. The cooperative transfer to Singer of the enforcement powers under the Gegauf patent, at a bargain price and for a joint, exclusionary purpose, was thus necessary to eliminate the Japanese competition. Third, Singer obviously thought that its most effective exclusionary weapon, the Tariff Commission proceedings, depended in part upon Gegauf's cooperation, since it asked Gegauf for and obtained a change in their prior assignment agreement for this common purpose. Section 1 of

the Sherman Act protects competitors and thus competition from the force and effects of such cooperative, exclusionary conduct by other competitors. The Sherman Act contemplates that each competitor will compete with the economic or legal weapons at his own disposal; it prohibits such a combination of powers, wills, and imaginations as Singer and Gegauf created in this case and brought to bear on the task of excluding the Japanese.

Moreover the continuing dealings between Singer and Gegauf necessarily limited the freedom of each to license the Japanese if this came to be viewed as desirable. The district court found that Singer and Gegauf never agreed not to license the Japanese. But every transaction between Singer and Gegauf was infused with a common exclusionary purpose which, while perhaps not amounting to an agreement, made vastly more difficult the path of any Japanese competitor that might seek a license under the Gegauf patent. After the Singer-Gegauf cross-licensing agreement (into which, the district court found, Gegauf was induced to enter by Singer's demonstrations of the desirability to both of excluding the Japanese), Gegauf could not have proceeded to license the Japanese without considering and giving weight to the consistency of any such action with the spirit of its prior arrangements with Singer. An even greater impediment to an individual decision to license the Japanese must necessarily have arisen from the second Singer-Gegauf agreement transferring the Gegauf application to Singer. As the district court carefully pointed out, Singer's primary bargaining

argument to reduce the price Gegauf would charge, and even to interest Gegauf in the transfer at all, was its ability and willingness to use the Gegauf patent to exclude the Japanese. Singer could not, consistently with the expectations it had purposely engendered in Gegauf, then turn and license the Japanese without the consent of Gegauf. Moreover, the district court expressly found that Singer "did not intend to license others under its patent" (Op., R. 1714).

A course of concerted conduct infused with the expectation that neither of two owners of competing patents will license competitors of both is itself incompatible with the Sherman Act. In this context it is immaterial that the parties did not formally agree not to license the Japanese under their patents. In *Eastern States Lumber Ass'n* v. *United States*, 234 U.S. 600, this Court struck down a combination of retailers intended to prevent the members from purchasing from wholesalers who competed with them at retail. The Court there held (234 U.S. at 608–609):

> True it is that there is no agreement among the retailers to refrain from dealing with listed wholesalers, nor is there any penalty annexed for the failure so to do, but he is blind indeed who does not see the purpose in the predetermined and periodical circulation of this report to put the ban upon wholesale dealers whose names appear in the list of unfair dealers trying by methods obnoxious to the retail dealers to supply the trade which they regard as their own * * *[22]

Here, too, one would have to blink the obvious to fail

[22] See also *United States* v. *Masonite Corp.*, 316 U.S. 265, 274–276, and *Interstate Circuit* v. *United States*, 306 U.S. 208.

to recognize the additional impediment that each of the Singer-Gegauf transactions imposed in the path of any hope the Japanese may have had to be licensed by either Singer or Gegauf.

The court below held that no conspiracy or combination could be found because, throughout their dealings, the attitude of both Singer and Gegauf was one of "suspicion, wariness and self-preservation"; Singer's ultimate concern was with Japanese competition in the United States, while Gegauf was primarily seeking protection from Japanese competition in Europe; "[n]either party was eager for the agreement finally made"; and each was determined to put into the arrangement no more than was absolutely necessary (Op., R. 1693, 1694). It has long since been settled, however, that such considerations as these do not bar a finding of conspiracy or combination in violation of Section 1 of the Sherman Act. In *United States* v. *General Electric Co.*, 80 F. Supp. 989 (S.D.N.Y.), the district court found a criminal conspiracy in violation of the Act despite findings that relations between the conspirators "were uncongenial from the very start"; the conspirators' "interests clashed in some respects"; and they knew their agreements "would not be maintained to the letter" (80 F. Supp. at 996, 997, 998). In *United States* v. *Line Material Co.*, 333 U.S. 287, this Court reversed a district court holding (64 F. Supp. 970, 976–977 (E.D. Wis.)) that the government failed to prove a combination and conspiracy to fix prices through patent licenses. The Court rested its decision on the concert of action manifested in the price-fixing provisions of the license agreements (333 U.S. at 306),

and reversed the district court despite findings that (*id.* at 297):

> The licenses were the result of arm's length bargaining in each instance. Price limitation was actively opposed *in toto* or restriction of its scope sought by several of the licensees * * *. A number tried energetically to find substitutes for the [patented] devices. All the licensees, however, were forced to accept the terms or cease manufacture. * * *

Similarly, in *United States* v. *Masonite Corp.*, 316 U.S. 265, reversing 40 F. Supp. 852 (S.D. N.Y.), the Court found a combination to fix prices by means of patent licenses even though various defendants were attempting to discover and produce a competitive non-infringing product, and many actually had distributed competitive products. The latter considerations were deemed "not controlling" and the Court rested its decision on the concerted action to fix prices (316 U.S. at 280–281).

In light of these decisions there can be little doubt that the concerted activities and agreements of Singer and Gegauf amounted to a combination and conspiracy to exclude the Japanese in violation of the Sherman Act. Singer and Gegauf did not merely meet once to offer and accept the terms of a single contract. They were not uninterested in each other's purposes aside from the specific terms demanded by the other in a particular transaction. It is clear that they have long been aware of a common competitive threat and this awareness has maintained their interest in concerted action over a period of years. They have acted together for the same exclusionary purpose on a number of occasions and they have, over

a prolonged period, maintained open channels of communication so that they could respond together whenever joint action against the Japanese appeared appropriate.[23] Such a sustained willingness to cooperate to exclude a common competitor—punctuated by periodic concerted acts to further the agreed-upon end—is the plainest proof of a conspiracy and illegal combination to restrain trade, whether or not the parties have ever formally agreed to cooperate with each other on a continuing basis. See *United States* v. *Parke, Davis & Co.*, 362 U.S. 29, 44; *cf. Direct Sales Co.* v. *United States*, 319 U.S. 703, where this Court held that a conspiracy existed between a drug manufacturer and a doctor who sold narcotics illegally, although the only agreements between the two were those involved in the individual sale of drugs by the manufacturer to the doctor.

Furthermore, the agreement assigning the Gegauf patent to Singer itself constituted a combination and conspiracy in restraint of trade. The district court laid stress upon the conclusion that Singer, after acquiring the Gegauf applications, was free to take whatever course it chose as to the use it would make of them. Thus, the court found that there was "no agreement * * * or understanding * * * with respect to the licensing, enforcing or use of their patents" (Op., R. 1693). And "throughout, their dealings were characterized by an absence of unity or identity of any common purpose or motive", because Singer's main fear was Japanese competition in the United

[23] Thus, for example, Singer could count on Gegauf to assist it in the tariff proceeding.

States, while Gegauf's main fear was Japanese competition in Europe (*ibid.*). But in the circumstances their would have been no reason for Gegauf to have insisted upon a promise as to what Singer would do with Gegauf's United States patent. Gegauf was transferring its patent rights to the United States, the very place where it knew Singer had a stronger motive to exclude the Japanese than Gegauf had. Singer and Gegauf debated only what would happen *after* Singer excluded the Japanese from the American market.

For the same reason, the court's finding that the parties' motives were different misses the point. The difference arose only as to the reasons why Japanese competitors were to be attacked, and in what country the effects of such an attack would be felt. But the common purpose was clearly present: to cripple Japanese competitors. When Gegauf became convinced that crippling the Japanese in the United States would help it in Europe, it became willing to sell to Singer, but only because it was so convinced. Gegauf was not worried about Singer's future course of action because it knew Singer had a greater motive to keep the Japanese out of the United States than it had. Singer and Gegauf were competitors; both wanted to hurt the Japanese; Singer induced Gegauf to transfer to Singer patent properties for the shared purpose of using them to hurt their common competitor. This is a conspiracy and combination in the plainest sense.

It makes no difference that the transferred property was a patent application and thus carried with it a potentiality of lawful exclusion. Even though one patentee may acquire additional patents by purchase in

the open market, and thus enhance his power of exclusion, competitors may not transfer the ownership of patents for the purpose of combining such properties in the hands able to bring the power of exclusion most heavily to bear upon other competitors. Cf. *United States* v. *Besser Manufacturing Co.*, 96 F. Supp. 304, 311 (E.D. Mich.), affirmed, 343 U.S. 444; *United States* v. *Krasnov*, 143 F. Supp. 184, 199 (E.D. Pa.), affirmed *per curiam*, 355 U.S. 5. This is not a restraint upon a patentee's power to sell his patent to the highest bidder, thus to maximize his financial reward. On the contrary, it is a restraint upon combined action of competitors aimed at excluding others—an activity traditionally outlawed by the Sherman Act. The facts of this case make the point quite clearly: Singer talked down the selling price asked by Gegauf for the patent by pointing out its usefulness in Singer's hands as a weapon against the Japanese.

II

THE AGREEMENT BETWEEN SINGER AND GEGAUF TO FACILITATE THE ISSUANCE TO EACH OTHER OF THE BROADEST POSSIBLE PATENT CLAIMS VIOLATED SECTION 1 OF THE SHERMAN ACT

The 1956 cross-licensing agreement, after reciting that "Singer and Gegauf realize that interference proceedings are about to be opened in the U.S.A. between the said Harris reissue application and one or more patent applications of Gegauf" (GX 26(S-3), R. 1066), provided in Paragraph 1 (R. 1067):

> Singer and Gegauf each undertakes not to do anything, either directly or indirectly and in any country, the result of which might restrict

the scope of the claims of the other party relating to the subject matter of the above mentioned patents and patent applications.

Singer and Gegauf each undertakes, in accordance with the laws and regulations of the Patent Office concerned, to facilitate the allowance in any country of claims as broad as possible, as regards the subject matter of the patents and patent applications referred to above.

In a contemporaneous report describing the agreement Stanford, the head of Singer's patent department, explained that Paragraph 1 states that "as to patent matters throughout the world * * * we will not oppose their applications and that we will do all we can to facilitate the allowance" (DX 31, R. 1414).

Since the cross-licensing agreement stated (GX 26 (S–3), R. 1066) that it was made "[i]n view of" the parties' "realiz[ation] that interference proceedings are about to be opened in the U.S.A." between the Harris and Gegauf patent applications, the plain intent of Paragraph 1 was to provide for the settlement of such proceedings. Indeed, Stanford's report so acknowledged. He stated that "the sum and substance" of the second sentence of Paragraph 1, by which each party undertook to facilitate the allowance of the broadest possible claims by the other, "is that whichever party is entitled to the claim, in accordance with the laws and regulations of the United States Patent Office, will receive the claims"; and that, "if Gegauf has filed first, and we know as a matter of fact that Harris could not push his date back of his filing date, then Gegauf would be entitled to the claim which has been

suggested to them, or which will be suggested to them when the interference is actually declared" (DX 31, R. 1414). In short, Singer and Gegauf, each in undertaking to facilitate the allowance of the broadest possible claims by the other, obligated themselves not to oppose each other in the anticipated interference proceedings before the Patent Office.

Four months after the agreement was signed, the Patent Office in August 1956 placed the Singer and Gegauf patents in interference (Stip. ¶ 68, R. 46). "[P]ursuant to this agreement, the interference * * * was settled" (GX 44, R. 1090) when Singer abandoned the proceeding in March 1957 (Stip. ¶ 71, R. 47). The Gegauf patent issued on April 29, 1958 (Stip. ¶ 106, R. 61).

The district court held that the first paragraph of the cross-licensing agreement was legal (Op., R. 1681). It ruled (*ibid.*) that the first sentence did not apply to the United States; and that in the second sentence, by which Singer and Gegauf undertook to facilitate the allowance of the broadest possible patent claims by the other,

> although the parties speak of "any country" the only place where such a provision was significant (at least as far as Singer was concerned) was in the United States where Singer knew Gegauf's application preceded Singer's Harris patent and reissue patent and where it felt sure Gegauf would be awarded the claim as filed. In effect, all that Singer agreed to do was not to attempt to obstruct what it had no power to prevent and what in fact it knew Gegauf would eventually be awarded under the

> United States laws on the ground of priority. There was nothing illegal in this. We know of no rule of law which would make such abstention under the circumstances here illegal; and this is so even if Singer could have blocked the issuance of the United States patent to Gegauf.

The court further ruled (Op., R. 1712) that "even assuming, for the sake of discussion, that such provisions were illegal, no acts were done pursuant to this agreement and the claim of Gegauf I was concededly valid." [24]

While we think that far stronger evidence than this record contains would be necessary to justify altering the unambiguous language of a written contract to give the words "in any country" different meaning in the two sentences of the first paragraph,[25]

---

[24] The stipulation as to the validity of Gegauf I states that "[t]he Government for purposes of this suit does not dispute the validity of the claims of the [Gegauf I patent], as issued" (Stip. ¶ 93, R. 58). The same stipulation expressly provides, however, that "[n]othing herein shall preclude the Government from offering evidence * * * of agreements made, if any, and circumstances relating thereto, between Singer and the alleged co-conspirators relating to cooperation in the acquiring of grants of patent claims" (*ibid.*).

[25] Indeed, the contemporaneous memorandum by Stanford indicates that both sentences had the same geographical scope. For after discussing and explaining each of the sentences separately, he concluded (DX 31, R. 1414):

"So, Paragraph 1 contains nothing that could be construed as any collusion on the part of either Singer or Gegauf as to patent matters throughout the world. It simply states that we will not oppose their applications and that we will do all we can to facilitate the allowance. * * *"

The theory of the district court's ruling was that the words "in any country" in the first sentence were "interpreted and intended" to apply to foreign countries where "nullity and in-

we are not directly challenging the district court's ruling that only the second sentence applies to the United States. For the two sentences merely provide reciprocal aspects of the same basic obligation. When Singer and Gegauf agreed to facilitate the allowance of the broadest possible patent claims to each other, they necessarily also agreed "not to do anything * * * which might restrict the scope of the claims of the other" before the Patent Office. In other words, it is immaterial whether the first sentence applies to the United States, because even if it does not, the second sentence nevertheless obligated Singer and Gegauf not to oppose each other in the anticipated interference proceedings before the Patent Office.

The district court erred in ruling that the agreement between Gegauf and Singer to facilitate the issuance of the broadest patent claims to each other was not illegal. Not only was this agreement an integral part of the illegal combination and conspiracy discussed above, but it itself violated Section 1 of the Sherman Act. The district court correctly recognized (Op., R. 1712) that Singer and Gegauf, each acting individually and exercising its own independent judgment, could refrain from opposing each other's claims

---

validation" proceedings were known; and that such proceedings are not available in the United States (Op., R. 1681). But when Singer wished to limit the geographical scope of agreements not to restrict the scope of competing claims to those countries which had "opposition, nullity or invalidation proceedings," it specifically referred to such proceedings. See its agreements with Vigorelli (GX 11 (S–2), R. 1034) and with Messerschmitt (GS 86 (S–4), R. 1146). Both of these agreements were drafted by the same patent attorney who prepared paragraph 1 of the Gegauf agreement (R. 457, 459, 501).

before the Patent Office. But they could not agree to do so where, as here, the purpose of such agreement was not directly to maximize the return which each hoped to receive from its own patent, but to exclude their mutual competitors, the Japanese.

Prior to developing this argument, however, we shall answer appellee's contention (Motion to Affirm, pp. 32, 39–40) that in the district court the government abandoned its claim that the second sentence of the first paragraph is illegal.

A. THE GOVERNMENT DID NOT ABANDON ITS CONTENTION THAT THE SECOND SENTENCE OF THE FIRST PARAGRAPH IS ILLEGAL

Appellee's argument rests on two statements by the government which, standing alone, do suggest that it was challenging only the first sentence. When these sentences are read in context and in the light of other statements made by the government in the same document, however, it is plain that there was no abandonment of the government's basic claim that both sentences constituted a single agreement, and that both were illegal.[26]

[26] In the government's earlier trial brief, it similarly treated both sentences as comprising the single agreement which it was challenging. Thus, it stated (p. 51; Tr. (unprinted) 3361) that, "[i]n order to be better able to fight Japanese competition, the defendant, Singer, entered into an agreement with Gegauf wherein the parties agreed to facilitate the granting of broad claims to each other and precluded themselves from narrowing each other's claims." It also alleged (p. 57; Tr. (unprinted) 3367) that the agreement was unlawful because Singer and Gegauf "agreed (1) not to take any action in any country, the result of which might restrict the scope of the other's patents, and (2) to facilitate the allowance of the broadest possible claims. Such an agreement is not ancillary to any normal or ordinary licensing agreement * * *."

Both the trial brief and the post-trial brief referred to in

The first statement on which appellee relies was made in the government's post-trial brief. There the government, after noting that the cross-licensing agreement "contains express provisions in which the parties agreed not to do anything which might restrict the scope of the patent claims of each other," pointed out that "[t]his agreement was designed to permit the parties to obtain the broadest patents possible * * *. The provision which is unlawful reads:". This was followed by the quotation of the first sentence (R. 1652).

Other portions of the post-trial brief make it clear, however, that we were attacking the entire first paragraph—both the first and second sentences—and were not limiting our attack to the first sentence. Thus, the summary of the argument at the opening of the brief stated that Singer and Gegauf "entered into a written agreement for the purpose of insuring the granting of the broadest possible patent claims to each other" (p. 3; Tr. (unprinted)). And, in a passage after the excerpt on which appellee relies, we point out that the parties' agreement "to assist each other in obtaining claims as broad as possible" could not be justified as ancillary to the cross-licensing agreement (p. 67; Tr. (unprinted) 6340). Both of these passages use the language of the second sentence, not the first, in describing the provisions which we were attacking. In other places in the brief, we used the language of the first sentence in describing Paragraph 1 (pp. 62, 64; Tr. (unprinted) 6425, 6427). It is therefore

---

the text are included in the record certified by the clerk of the district court to this Court.

quite plain that we used the language of both sentences interchangeably in describing the paragraph, and our focussing on the first sentence in a particular passage was not an abandonment of our attack on the second sentence. For we treated the two sentences as complementary undertakings, expressing in different form the parties' agreement not to contest each other's patent applications throughout the world, and both imposing the same substantive obligations of cooperation and assistance.

The second statement was made in the government's memorandum in response to Singer's proposed findings. There, after explaining that the government was not contending that the cross-licensing agreement was unlawful, the government stated that "[t]he only phase" of that agreement which it attacked "is the provision * * * by which the parties agreed not to do anything directly or indirectly, in any country the result of which might restrict the scope of the patent claims of the other party" (R. 1650–1651). The government was merely explaining that it was not attacking the entire cross-licensing agreement, but only the first paragraph; and once again, as in its earlier post-trial brief, it was not attempting to draw any distinction between the first and second sentences.

The district court had no doubt that the government was pressing its attack on the entire first paragraph, and not limiting itself to the first sentence. At the outset of its opinion the court, in describing the acts alleged to have been committed pursuant to the conspiracy, used the language of the second

sentence in summarizing the government's challenge to the first paragraph, *i.e.*, it stated that the government alleged that Singer had entered into separate agreements with Gegauf and Vigorelli "to insure the granting, with respect to specified patents, of the broadest possible patent claims to each other for the purpose of excluding foreign automatic zigzag sewing machines" (Op., R. 1654). And, in its treatment of the substantive issues, the court discussed and ruled upon the legality of both sentences of the first paragraph (Op., R. 1681–1682).

Neither the appellee nor the district court could have been in any way misled or prejudiced by the government's stressing the language of the first sentence in certain portions of its written presentation. The government made it clear in its post-trial brief that it was challenging the validity of both sentences, and the court considered and upheld the validity of both of them. The government concededly did not explicitly waive its attack on the second sentence, and there is no basis in this record for implying such a waiver.

B. THE AGREEMENT TO FACILITATE THE ALLOWANCE OF THE BROADEST POSSIBLE PATENT CLAIMS WAS ILLEGAL

As we have shown, the agreement by Singer and Gegauf each to facilitate the allowance to the other of the broadest possible patent claims was made in anticipation of an expected interference between their patents before the United States Patent Office. It was designed to avoid any contest in such proceeding which might result in narrowing or invalidating each

other's claims. The record shows that these two competitors made such an agreement because they jointly wanted to obtain the broadest possible patent claims to use in eliminating their mutual competitors, the Japanese (see *infra*, pp. 61–63). The nature of interference proceedings before the Patent Office indicates that, had it not been for their common purpose of excluding the Japanese, Singer and Gegauf would have had a motive for limiting each other's claims and, absent this agreement, each might independently have tried to do so. In these circumstances, their agreement not to limit each other's claims unreasonably restrained trade.[27]

1. *The Nature of Interference Proceedings before the Patent Office*

Patent Office proceedings are *ex parte* at almost all stages. The major exception is when an interference is declared between parties claiming rights to the same invention.

The Patent Office's Rules of Practice define an interference as "a proceeding instituted for the purpose of determining the question of priority of invention between two or more parties claiming substantially

[27] The fact that they agreed to act "in accordance with the laws and regulations of the Patent Office concerned" did not validate their undertaking. This provision obviously meant only that, in facilitating the allowance of each other's claims, each would accommodate its activities to the regulations of the patent office of the particular country involved. It has no bearing upon the legality of an agreement among competitors, made for the purpose of excluding a common competitive enemy, to aid each other in obtaining the broadest possible patents.

the same patentable invention [which] may be instituted * * * [between] a plurality of applications or [between] an application and a patent" (37 C.F.R. 1.201(a)). An interference is declared by the primary examiner whenever an application is filed which in his opinion claims substantially the same invention as another pending application or existing patent (35 U.S.C. 135). Before he declares an interference, the primary examiner must make an initial determination that the claim or claims to be set up in interference are allowable in each of the applications involved (37 C.F.R. 1.201(b)), and that the applications or patents containing the interfering claims are not owned by the same party (37 C.F.R. 1.201(c)).[28]

Once an interference is declared each party must file a preliminary statement setting forth certain information relating to the date of invention of his claim. If the statement by the junior party (the one whose application bears a later filing date) fails to overcome the *prima facie* priority of the applicant with the earlier filing date (the senior party),[29] the examiner of interferences will notify the junior party

[28] Ordinarily the wording of the interfering claims must be identical before an interference will be declared, and therefore, where there is a difference in language, the examiner will suggest to the parties "such claims as are necessary to cover the common invention in the same language" (37 C.F.R. 1.203(b)). Failure of a party to amend his application to include a claim suggested by the examiner for interference purposes is considered a disclaimer of the invention covered by the claim (*ibid.*).

[29] The parties to an interference are presumed to have made their inventions in chronological order of the filing dates of their applications, and the burden of proof rests upon the party seeking to establish a different set of facts (37 C.F.R. 1.257).

that within a certain specified time judgment will be rendered against him unless he shows cause why such action should not be taken (37 C.F.R. 1.225).

After the preliminary statements have been filed and approved by the examiner of interferences, various motions may be filed by the parties, including a motion to dissolve the interference on the grounds "that the claims forming the counts of the interference are not patentable, or are not patentable to a particular applicant, while being patentable to another party" (37 C.F.R. 1.232). Such motions are heard by the primary examiner, and if he determines that all or part of the interfering claims are unpatentable, the interference will be dissolved (37 C.F.R. 1.237).

If the interference is not dissolved or suspended, each party may take testimony by deposition (37 C.F.R. 1.251). This is followed by written briefing and oral argument before the Board of Patent Interferences (37 C.F.R. 1.253, 1.254, 1.256). An interference is terminated by a judgment of priority by the Board of Patent Interferences, or by a disclaimer, concession or abandonment of the intereference by one of the parties, which automatically cancels the claims involved from the application of the party making the disclaimer (37 C.F.R. 1.261, 1.262).

In sum, the basic purpose of an interference proceeding is to determine priority between competing claims to the same invention. But a junior applicant may always place in issue the patentability of the interfering claims. Thus, had there been no cross-licensing agreement in the present case, when the anticipated interference between the Singer and Gegauf patents was declared, Singer could have (1)

attempted to establish that, although the Gegauf application had been filed first, Singer in fact had made the earlier invention; (2) endeavored to narrow the scope of the patent that might be issued to Gegauf; or (3) sought to show that Gegauf's invention was not patentable.

The junior applicant's right to challenge the patentability of the earlier-filed claim is important in two respects. *First*, it protects the junior applicant's right to practice his invention, even if he cannot obtain a patent therefor, by preventing the issuance of a patent to the earlier applicant. *Second*, the adversary nature of such a contest can provide an important check on the granting of invalid patent monopolies. See *Opposition and Revocation Proceedings in Patent Cases, Study No. 4, Subcommittee on Patents, Copyrights and Trademarks*, 84th Cong., 2d Sess., p. 14; Ladd, *Business Aggression Under The Patent System*, 26 U. Chi. L. Rev. 353, 356.

2. *The purpose of Singer and Gegauf in agreeing to facilitate the allowance of each other's broadest possible patent claims was to use such broad patents against the Japanese*

In January 1956, shortly after Singer had concluded its cross-licensing agreement with Vigorelli (see the Statement, *supra*, pp. 9–11), Singer discovered that Gegauf had filed in the United States an application for a patent covering multiple-cam machines, which enjoyed a priority date of nine days earlier than the Harris reissue application (GX 16, R. 1042). Singer expected that an interference would be declared between the two patents, and that Gegauf would be awarded priority over Harris (*ibid.*). Singer also recognized that in an interference proceeding "each party has an opportunity to attempt to

block the ultimate allowance of the interfering claims to the opponent party" and it concluded that the "Harris reissue application is of value to us as a means for opposing the final allowance to Bernina [Gegauf] of broad U.S. claims covering multiple-cam ornamental machines" (GX 16, R. 1042–1043). Furthermore, Singer learned from its representatives in Italy that one of the reasons Gegauf had given a royalty-free license to Vigorelli was Vigorelli's knowledge of certain patents (a list of which was submitted to Singer (GX 19, R. 1054)) "which apart from excluding that the general claim (multiple cams) could be sustained, also left open to discussion the specific claim (single cam-follower) contained in the two patents under discussion" (GX 19, R. 1052). Since these patents were the basis for Gegauf's United States application and its claim of priority in the United States (GX 175 (unprinted), Tr. 4039),[30] the patent information Singer had received from its Italian office could have been used to challenge the scope and validity of Gegauf's United States application.

But Singer realized that "no one party can or will corner the broadest patent protection [on multi-cam machines] in all or even in several of the principal countries" (GX 16, R. 1044), and concluded that its "position would be enhanced" if it could "negotiate an agreement of the Singer-Vigorelli type" with Gegauf (*ibid.*). In its negotiations with Gegauf,

[30] In its priority claim before the United States Patent Office, Gegauf referred to Swiss patent applications Nos. 80,461 and 91,361 (GX 175 (unprinted), Tr. 4039); No. 80461 was subsequently issued as Swiss patent No. 310,788 (see GX 25 (unprinted), Tr. 3508; compare GX 175 (unprinted), Tr. 4068 with *id.*, Tr. 4145).

Singer told Gegauf it "could knock out" Gegauf's claims in the United States but that "in so doing" both of them "were probably going to [be] hurt" (GX 24, R. 1063–64). Singer played upon "Gegauf's big fear" of competition in the United States from lower-priced Japanese machines and urged, as "one of the strong points of [its] argument," the necessity of being able "to fight against this Japanese competition in their building a machine that in any way reads on the patents of [Singer] and of Bernina [Gegauf] which are in conflict" (GX 24, R. 1062).

Thus, Singer was aware that "no one party can or will corner the broadest patent protection," and it entered into an agreement with Gegauf by which each undertook to facilitate the allowance to the other "of claims as broad as possible," so as to be able more effectively to "fight against the Japanese competition." The patent laws do not condone, and the Sherman Act condemns, such an agreement between competitors.

3. The agreement between Singer and Gegauf not to challenge each other's patent applications violated the Sherman Act

"[A] patent is an exception to the general rule against monopolies and to the right to access to a free and open market. The far-reaching social and economic consequences of a patent, therefore, give the public a paramount interest in seeing that patent monopolies spring from backgrounds free from fraud or other inequitable conduct and that such monopolies are kept within their legitimate scope." *Precision Instrument Manufacturing Co.* v. *Automotive Main-*

tenance Machines Co., 324 U.S. 806, 816. For these reasons, this Court has been particularly vigilant in insuring that patents are "kept within their legitimate scope," and are not used improperly to eliminate or destroy competition.

The instances are legion. Particularly in point are the cases in which this Court has invalidated provisions in patent licensing agreements which barred the licensee from attacking the validity of the licensed patent, because of "the necessity of protecting our competitive economy by keeping open the way for interested persons to challenge the validity of patents which might be shown to be invalid." *Edward Katzinger Co.* v. *Chicago Metallic Mfg. Co.*, 329 U.S. 394, 400; *MacGregor* v. *Westinghouse Electric & Manufacturing Co.*, 329 U.S. 402; *Sola Electric Co.* v. *Jefferson Electric Co.*, 317 U.S. 173. These cases reflect the fact that it is "the public interest which is dominant in the patent system" (*Mercoid Corp.* v. *Mid-Continent Investment Co.*, 320 U.S. 661, 665), and that the public interest may be injured by agreements which "[tie] the hands and [seal] the lips of the only parties who would ordinarily stand suit and contest the validity of the patents" (*United States* v. *Standard Oil Co.*, 33 F. 2d 617, 630 (N.D. Ill.), reversed on other grounds, 283 U.S. 163).

Parties to a cross-licensing agreement might hesitate to attack the *validity* of each other's claims if the result might be to invalidate both claims and thus leave each without any patent protection. But it does not follow that, were it not for the agreement, Singer and Gegauf would not have atempted to narrow the

scope of each other's claims. On the contrary, each of them might well have independently decided to urge that the other should be given much narrower authority than it sought.

The cross-licensing agreement did not give either Singer or Gegauf an exclusive license under the other's patents; it merely prohibited each from attacking the other. Each was free to grant other licenses. If there had been no assignment of the patent and if Singer subsequently decided to license under its own patent, the amount of royalties it could command would obviously depend, among other things, on how broad its own patents were and how narrow were those on competing machines. Singer could expect to receive more for a license under a broad patent in an industry where the narrow scope of other patents made it unnecessary either to take licenses thereunder or to pay substantially therefor. The same considerations would also apply to Singer's competitor, Gegauf.

Thus, in terms of maximizing the "pecuniary reward for the patentee's monopoly" (*United States v. General Electric Co.*, 272 U.S. 476, 490), it would have been to the interest of both Singer and Gegauf to restrict the scope of each other's patent grants.

Instead, each of them agreed to facilitate the award of the broadest possible claims to the other. Why? Not because they hoped thereby to increase directly the amount they could receive from the legitimate exploitation of their patent monopoly. On the contrary, the reason each undertook to aid his competitor in securing broad patents was to enable them, pursuant to a common understanding, to use such broad

monopolies against their common enemy, the price-cutting Japanese.

The courts have frequently condemned such concerted action by competitors to obtain broad patents to be used to stifle competition. In *United States* v. *Hartford-Empire Co.*, 46 F. Supp. 541, 611 (N.D. Ohio), affirmed, 323 U.S. 386, the district court noted that part of the defendants' illegal conspiracy was "a course of procedure involving a shifting of claims between the patent applications of the two companies in such a manner as to obtain the strongest patents possible". The result of this agreement was that "patents issued virtually as the two cooperating companies desired," creating "a distinct handicap to inventors having applications in the Patent Office for patents that might come into competition with those sought by and issued to [the conspirators]." The court found that "[t]his joint method of action in the Patent Office in order to prevail over their adversaries resulted in distinct advantages to the two companies that otherwise might not have been obtained." See also, *United States* v. *National Lead Co.*, 63 F. Supp. 513, 532, (S.D.N.Y.), affirmed, 332 U.S. 319.

The fact, relied on by the district court (Op., R. 1712), that neither Singer nor Gegauf individually had any "affirmative duty or obligation to seek to narrow or hold unpatentable claims which are in interference" is irrelevant to the legality of their agreement not to do so. For the prohibitions of Section 1 of the Sherman Act are directed against concerted action to restrain trade, and there are many acts which, although legal if done independently, become illegal when done

jointly. For example, although an individual businessman may decide not to sell to particular customers, an agreement among two or more businesses to refrain from dealing constitutes an illegal boycott. See *Klor's, Inc.* v. *Broadway-Hale Stores, Inc.*, 359 U.S. 207.

Nor can the agreement be justified as a settlement of prospective litigation before the Patent Office. While the rules of the latter permit the settlement of interference litigation, they do not justify agreements by which the parties refrain from contesting the scope of each other's claims as a step toward eliminating a competitor. And, of course, a contest over the scope of the claims might also develop information which could lead to their rejection as invalid.

In *National Harrow Co.* v. *Hench*, 83 Fed. 36 (C.A. 3), the court, in holding that a patent pool designed "to prevent competition in business and enhance prices" violated the Sherman Act, rejected the argument that the pool was justified because it was designed to avoid litigation among the members with respect to various patents. The court stated (p. 38):

> The suggestion that the contract is justified by the situation of the parties—their exposure to litigation—is entitled to no greater weight. Patentees may compose their differences, as the owners of other property may, but they cannot make the occasion an excuse or cloak for the creation of monopolies to the public disadvantage. * * *

Congress has recently recognized that serious injuries may be done to our competitive system by im-

proper settlements of interference proceedings. In Public Law 87–831 (76 Stat. 958), enacted on October 15, 1962, Congress provided for the filing with the Patent Office of all settlements in interference proceedings. The House Committee noted that "[r]ecent experience has indicated that parties have sometimes used these interference proceedings in derogation of the public interest, in that interference settlement agreements have been entered into for the purpose of restricting competition," and it explained that the purpose of the legislation was to "make it more difficult for patent applicants and owners to use an interference settlement agreement as a means of secretly violating the antitrust laws." H. Rep. No. 1983, 87th Cong., 2d Sess., p. 1. The agreement between Singer and Gegauf to aid each other in obtaining the broadest possible claims, entered into in anticipation of an imminent interference proceeding between their competing patents, plainly comes within the spirit, if not the letter, of the evil which Congress was trying to reach by this recent legislation.

Singer's antitrust violation also involved a violation of a salutary principle which governs the conduct of applicants before the Patent Office. In the *Precision Instrument* case, *supra,* this Court, in holding that a patentee was barred from maintaining an infringement action because it withheld from the Patent Office information that perjury had been committed in an interference proceeding, stated (324 U.S. at 818):

> * * * Those who have applications pending with the Patent Office or who are parties to

> Patent Office proceedings have an uncompromising duty to report to it all facts concerning possible fraud or inequitableness underlying the applications in issue. * * * Public interest demands that all facts relevant to such matters be submitted formally or informally to the Patent Office, which can then pass upon the sufficiency of the evidence. Only in that way can that agency act to safeguard the public in the first instance against fraudulent patent monopolies. * * *

As we have shown (*supra*, pp. 58–61), an interference is the major adversary phase of Patent Office procedure, and the Patent Office necessarily relies on the contesting parties there to develop fully all the facts bearing on whether a patent should issue and, if so, how broad its claims should be. Since the monopoly conferred by a patent denies the public the usual benefits of competition in the patented product, the public interest is injured whenever the parties to an interference proceeding suppress any facts which might either require denial of the application or restriction of the claims. In the present case Singer and Gegauf were the parties best qualified to bring to the Patent Office's attention any information which might call for narrowing of each other's claims. Their agreement not to contest the scope of those claims violated their "uncompromising duty" to report to the Patent Office "all facts concerning possible fraud *or inequitableness* underlying the applications in issue" (*Precision Instrument, supra*, emphasis added). It would most certainly be inequitable for them to procure, through such a common plan, the

issuance of broader patents than either was entitled to receive.

CONCLUSION

The judgment of the district court dismissing the complaint should be reversed, and the case should be remanded for the entry of an appropriate decree.

Respectfully submitted.

ARCHIBALD COX,
Solicitor General.
LEE LOEVINGER,
Assistant Attorney General.
DANIEL M. FRIEDMAN,
Assistant to the Solicitor General.
ROBERT B. HUMMEL,
PATRICK M. RYAN,
GEORGE R. KUCIK,
LEE J. WEINSTEIN,
Attorneys.

MARCH 1963.

U. S. GOVERNMENT PRINTING OFFICE: 1963

Office-Supreme Court, U.S.
FILED
APR 1 1963
JOHN F. DAVIS, CLERK

IN THE

Supreme Court of the United States

OCTOBER TERM, 1962

No. 438

UNITED STATES OF AMERICA,
Appellant,

v.

THE SINGER MANUFACTURING COMPANY.

BRIEF FOR THE SINGER MANUFACTURING COMPANY

ARTHUR E. PETTIT,
WINTHROP, STIMSON, PUTNAM & ROBERTS,
40 Wall Street,
New York 5, New York,
Attorney for The Singer Manufacturing Company.

EDWIN J. WESELY,
TERENCE H. BENBOW,
EDWARD A. MILLER,
RICHARD J. RIKER,
JOHN A. FISKE,
Of Counsel.

April 11, 1963

INDEX

	PAGE
PRELIMINARY STATEMENT	1
STATEMENT OF FACTS	4
I. Background of Singer-Vigorelli and Singer-Gegauf negotiations	6
A. Conception, invention and development of Singer 401 machine	6
B. Description of 401 multiple cam mechanism	7
C. Conception, invention and development of Singer 306 and 319 machines	8
D. Introduction of multiple cam zigzag mechanisms into the United States and Singer's reaction thereto	9
E. Purchase by Singer of the Harris United States patent and corresponding foreign patents on June 10, 1955	12
II. Singer negotiates for and enters into the Singer-Vigorelli cross-license agreement of November 17, 1955	14
A. Singer concludes that litigation with Vigorelli will result unless a cross-license agreement is made	14
B. Singer seeks conference for purpose of arranging cross-license agreement with Vigorelli	15
C. Singer learns of Gegauf patent and it becomes imperative that Singer come to an agreement with Vigorelli	16
D. Singer and Vigorelli enter into a cross-license agreement	17

PAGE

III. Singer negotiates for and enters into the Singer-Gegauf cross-license agreement of April 14, 1956 18

A. Singer, by January 1956, concludes that it is in serious difficulty with its 401 machine in the United States 18

B. Singer concludes that it would be to its advantage to negotiate with Gegauf for a cross-license agreement while Singer knows and Gegauf does not know that Gegauf has the earlier priority date 20

C. Singer does not feel that it is in a good bargaining position because it can oppose allowance of a claim to Gegauf in an interference proceeding 21

D. Singer prepares to negotiate with Gegauf, February-March 1956 22

E. Singer negotiates with Gegauf, April 12, 1956 23

(1) Singer has no acquaintanceship with Gegauf, but is in a position where it is essential that Singer obtain a license from Gegauf 24

(2) Attitude and feelings of the respective parties in bargaining 24

(3) Singer urges that litigation be avoided so that patents may issue. The obtaining of broad claims or patents was not discussed or mentioned 25

F. Singer and Gegauf enter into a cross-license agreement 27

G. The license was vital to Singer's welfare, obtaining it was entirely proper, and the agreement as signed constituted the entire agreement of the parties 29

PAGE

H. A possible purchase of Gegauf's patent application was never mentioned by Singer or Gegauf 29

I. Before the trial court the Government conceded that this agreement was executed prior to the commencement of the alleged conspiracy 30

IV. Singer negotiates for and enters into Gegauf-Singer assignment agreement of December 5, 1957 30

A. Singer rejects Vigorelli proposal for joint action, April 20, 1956 30

B. Singer lays the foundation for an approach by a third party to Gegauf's attorney with the idea that Singer could enforce the Gegauf patent better than Gegauf could and with the suggestion that Gegauf sell the Gegauf application to Singer 31

C. Singer inquires as to whether Gegauf would be interested in selling the Gegauf patent application to Singer. Singer prepares for conference, August-September 1956 34

D. Gegauf refuses to sell for less than $250,000 and Singer terminates the negotiations, September 1956 36

E. A year intervenes 37

F. One year after its previous attempt, Singer, concealing its purpose, seeks new conference for purpose of again trying to purchase Gegauf patent application, September 1957 38

G. Singer believes agreement with Gegauf reached at price of $40,000, October 1957 ... 39

H. Gegauf makes new demands, October 1957 40

I. Gegauf's position hardens, November 1957 41

PAGE

J. Stanford prepares to go to Europe to obtain the means to bar all imports of machines infringing Gegauf Patent No. 1, November 1957 43

K. Stanford goes to Europe to there arrange a conference with Gegauf and negotiates with Gegauf. Gegauf assignment made for $90,000, December 4-5, 1957 44

L. Provisions of the Gegauf-Singer assignment agreement 47

M. The written agreement constituted the entire agreement and understanding of the parties 48

N. Singer's purpose in acquiring Gegauf Patent No. 1 was to become the complete owner thereof in order to protect its 401 machine in such manner as best served Singer's interest 49

V. Singer attempts to enforce Gegauf Patent No. 1 for the protection of its 401 machine 50

A. Singer commences a proceeding before the United States Tariff Commission to protect its 401 machine by obtaining an order excluding all unlicensed machines infringing Gegauf Patent No. 1 50

B. Singer institutes infringement actions to enforce Gegauf Patent No. 1 and attempts to obtain prompt adjudication of the validity of such patent 54

C. Singer's enforcement efforts have been directed to the prevention of the sale of machines infringing Gegauf Patent No. 1 56

	PAGE
SUMMARY OF ARGUMENT	56
ARGUMENT	66
POINT I. The Singer-Gegauf cross-license agreement provides that the parties will not bring opposition, nullity or invalidation proceedings, where such proceedings are available, and that they will settle interference proceedings, where such proceedings are available, in accordance with the laws and regulations of the Patent Office concerned. Such provisions are entirely legal	66
A. The Government now, for the first time, argues that the provisions of the second sentence of Clause 1 are illegal	68
B. The second sentence of Clause 1 contemplates, and provides for, the allowance of lawful claims. It does not prohibit opposition to illegal claims	72
C. The provisions of the second sentence agreeing to facilitate the allowance of claims as broad as possible must be considered in the light of the surrounding circumstances	78
D. The importance of the provisions embodied in Clause 1 is artificially blown up by the Government out of all proportion to its true significance and purpose	83
POINT II. The amendment of the Gegauf-Singer assignment agreement constituted no conspiracy or any part of a conspiracy between Singer and Gegauf	86

PAGE

A. Singer requested the deletion from the Gegauf-Singer assignment agreement of the provision with respect to Pfaff in order to have a better chance of prevailing before the Tariff Commission 86

B. Gegauf extracted a toll from Singer as a condition to Gegauf's consent to the deletion of the Pfaff provision 88

POINT III. There is no issue in this case of an illegal aggregation or combination of Gegauf Patent No. 1 and the Harris reissue patent in the hands of Singer 91

POINT IV. The Government has abandoned any contention that the alleged conspiracy in any way involved Gegauf Patent No. 2, the Johnson patent or the Perla patent 92

A. Gegauf Patent No. 2 92

B. The Johnson and Perla patents 93

POINT V. Singer's acquisition of Gegauf Patent No. 1 and its enforcement of such patent against infringers was not a part of any combination or conspiracy 95

A. The issue here involved relates solely to Singer's acquisition of Gegauf Patent No. 1 and the enforcement of that patent against *infringers* thereof. Restraint of noninfringing competitors is not involved 99

B. Notwithstanding the Government's protestations to the contrary, its contention that a conspiracy existed is based on the premise that agreements were made or understandings reached between Singer and Gegauf outside of the written agreements between them 100

PAGE

C. There is no validity to the Government argument that Gegauf contributed to the conspiracy property worth millions of dollars for the benefit that Gegauf would gain in Europe through Singer's "crippling" the Japanese sewing machine industry 104

D. There was no combination or conspiracy through concerted action for the mutual benefit of Singer and Gegauf 108

POINT VI. The cases cited by the Government do not show the existence of any combination or conspiracy in this case 114

POINT VII. The transactions between Singer and Gegauf did not result in dominance of the market or in any illegal restraint on competition 121

A. In restraint-of-trade cases conduct challenged must be tested in the light of the competitive market 121

B. The right to enforce a valid patent covering a product made and sold by the owner thereof is not affected by the fact that there may be few non-infringing competing machines in the market 124

C. The facts show that Singer and Gegauf did not dominate the United States market and the vigor of foreign competition precluded any possibility of an unreasonable restraint by Singer 127

CONCLUSION 131

PAGE

APPENDIX

Facts with respect to the competitive market 1a

A. The Singer 401 machine competes with all manner of sewing machines 1a

B. The vigor of the foreign competition which Singer had to meet 11a

C. The Japanese and European manufacturers were free at all times to manufacture and sell non-infringing sewing machines with machine-carried multiple cam devices 14a

Citations

Cases

American Tobacco Co. v. *United States*, 328 U. S. 781 119

Cole v. *Hughes Tool Co.*, 215 F. 2d 924 (10th Cir. 1954), *cert. denied*, 348 U. S. 927 (1955) 125

Cutter Laboratories v. *Lyophile-Cryochem Corp.*, 179 F. 2d 80 (9th Cir. 1949) 124

Delaware Valley Marine Sup. Co. v. *American Tobacco Co.*, 297 F. 2d 199 (3d Cir. 1961), *cert. denied*, 369 U. S. 839 (1962) 115, 116-17

Direct Sales Co. v. *United States*, 319 U. S. 703 119-20

Eastern States Lumber Ass'n v. *United States*, 234 U. S. 600 115

Ethyl Gasoline Corp. v. *United States*, 309 U. S. 436 117-18

Fashion Originators Guild v. *Federal Trade Com'n.*, 114 F. 2d 80 (2d Cir. 1940), *aff'd*, 312 U. S. 457 (1941) 120-21

Great Northern Railway Co. v. *Delmar Co.*, 283 U. S. 686 (1931) 76

PAGE

Hazeltine v. *Avco Manufacturing Corp.*, 227 F. 2d 137 (7th Cir. 1955), *cert. denied*, 350 U. S. 987 (1956) 60, 125-26

Interstate Circuit v. *United States*, 306 U. S. 208 115

In re Orion Co., 71 F. 2d 458 (C. C. P. A. 1934) 100

Standard Sanitary Mfg. Co. v. *United States*, 226 U. S. 20 118

Standard Oil Co. v. *United States*, 283 U. S. 163 (1931) 119, 122

Theater Enterprises, Inc. v. *Paramount Film Distributing Corp.*, 346 U. S. 537 (1954) 115, 116

United States v. *Besser Manufacturing Co.*, 96 F. Supp. 304, *aff'd*, 343 U. S. 444 119

United States v. *Columbia Pictures Corp.*, 169 F. Supp. 888 (S.D.N.Y. 1959), 189 F. Supp. 153 (S.D.N.Y. 1960) 123

United States v. *Columbia Steel Co.*, 334 U. S. 495 (1948) 65, 122

U. S. Consolidated Seeded Raisin Co. v. *Griffin & Skelly Co.*, 126 F. 364 (9th Cir. 1903) 126

United States v. *E. I. du Pont de Nemours & Co.* (*Cellophane*), 351 U. S. 377 (1956) 122, 9a

United States v. *General Electric Co.*, 80 F. Supp. 989 (S.D.N.Y.) 114, 118

United States v. *Huck Mfg. Co.*, CCH Trade Reg. Rep., Par. 70,714, p. 77,850 (E. D. Mich. 1963) 123-24

United States v. *International Boxing Club*, 358 U. S. 242 (1958) 123

United States v. *Krasnov*, 143 F. Supp. 184, *aff'd*, 355 U. S. 5 118

United States v. *L. D. Caulk Co.*, 126 F. Supp. 693 (D. C. Del. 1954) 125, 126

United States v. *Line Material Co.*, 333 U. S. 287 ..... 114, 118

United States v. *Masonite Corp.*, 316 U. S. 265 ..... 114, 115

PAGE

United States v. *National Lead Co.*, 63 F. Supp. 513 (S.D.N.Y.), *aff'd*, 332 U. S. 319 118-19

United States v. *Parke, Davis & Co.*, 362 U. S. 29 (1960) 64, 111, 113, 115

United States v. *United States Gypsum Co.*, 333 U. S. 364 117

United States v. *Yellow Cab Co.*, 338 U. S. 338 (1949) 131

Virtue v. *Creamery Package Mfg. Co.*, 227 U. S. 8 (1913) 65, 125-26

White Motor Company v. *United States*, 83 Sup. Ct. 696 123

Statutes

Sherman Act, 26 Stat. 209, as amended, 15 U. S. C. 1 *et seq.*:

Section 1 ..... 108, 117, 122

Tariff Act of 1930, as amended, 19 U. S. C. 1337: Section 337 53

Miscellaneous

37 C. F. R. § 1.203 (a) (b) 78

17 C. J. S., *Contracts* § 318 (1939) 76

3 Corbin, *Contracts* § 546 (1960) 76

Report of the Attorney General's National Committee to Study the Antitrust Laws (1955) 64-65, 116, 121-22, 124

4 Williston, *Contracts* § 260 (3d ed. 1961) 76

Supreme Court of the United States

OCTOBER TERM, 1962

No. 438

UNITED STATES OF AMERICA,

Appellant,

against

THE SINGER MANUFACTURING COMPANY

BRIEF FOR THE SINGER MANUFACTURING COMPANY

Preliminary Statement

This case, according to the Government's present contention, now involves three agreements between Singer and Gegauf: a cross-license agreement dated April 14, 1956, an assignment agreement dated December 5, 1957, and an amendment to the assignment agreement dated July 22, 1959. It in addition involved from the beginning and still involves a license agreement between Singer and Vigorelli, dated November 17, 1955, and various other agreements.

Of more importance, this case involves the attitude, motive, intent and purpose of Singer and of Gegauf at various times extending over a period of almost four years. The Government, now conceding that there was no agreement or understanding made by Singer or Gegauf

outside of the written agreements (Govt. Br. 27),[1] relies upon its own interpretation of the attitude, motive, intent and purpose of Singer and Gegauf as reflected (1) in their negotiations for the written agreements, (2) in the agreements themselves, and (3) in literally hundreds of written documents (while, of course, ignoring all testimony presented to the trial court). In its fashion it also relies upon findings and stipulations. The Government nevertheless purports to cover all essential facts in a statement covering less than eight pages of text. In this short statement it resorts extensively to quotations from letters and documents, out of context and without any of the relevant background, for the purpose of conveying the idea that the quotation itself establishes that a particular attitude, motive, intent or purpose existed. (Examples can be found on pages 11, 13, 14-15, 16, 17, 19 and 20 of the Government's brief; for a detailed discussion of a specific example, see pages 15-16, *infra*.)

We consider the statement of facts set forth by the Government to be completely useless. It does nothing to show the actions, attitude, motive, intention and purpose

---

[1] The following abbreviations are used in this brief:

R.	—Printed Record
Op.	—Opinion of the trial court
Stip. Par.	—Stipulation of Facts agreed to by the parties and the cited paragraph thereof
Stanford, R.	—Testimony of the named witness
Gx.	—Government's Exhibit
Dx.	—Defendant's Exhibit
Ex. S-	—Exhibit to the Stipulation of Facts
Gx. (S-); Dx. (S-)	—Government's Exhibit or Defendant's Exhibit which is also an exhibit to the Stipulation of Facts
(unprinted), Tr.	—Unprinted Transcript of the Record on Appeal
Govt. Br.	—Government's Brief

of Singer or Gegauf as they actually existed in the context of the contest that went on between them, with respect to which the trial court found: "If one were to describe the attitude of these alleged 'conspirators' throughout, it would have to be in terms of suspicion, wariness and self-preservation. It is most striking that, throughout, their dealings were characterized by an absence of unity or identity of any common purpose or motive." (Op., R. 1693) The picture drawn by the Government would be exactly the reverse.

We believe that this case, involving as it does almost solely a determination of facts and which was before the trial court after a trial held on 22 days and with a printed record alone in excess of 1,700 pages, deserves more than the nimble and adroit but inaccurate and misleading statement of facts presented by the Government and we consider it necessary that we set forth a full statement of the facts from which the attitude, motive, intent and purpose of Singer and Gegauf must be derived and their actions judged.

The district judge who tried this case presided at all pre-trial hearings. Sixteen such hearings were held prior to February 17, 1961 (R. 20) and additional pre-trial hearings were held subsequent to such date (Op., R. 1653). More than 900 exhibits were introduced in evidence ((unprinted), Tr. 2442-2681, 3427-5767, printed portion found at R. 1017-1633, and Physical Exhibits).

Prior to trial, by order of the trial court ((unprinted), Tr. 3285-87), counsel marked written documents to be offered in evidence in red and blue to show the portions thereof they deemed significant and submitted to the district judge written statements setting forth the significance of each ((unprinted), Tr. 3288-3304, 3387-3412).

Briefs.

Almost all documentary exhibits were introduced in evidence shortly after the trial commenced. Counsel argued the meaning and significance of such exhibits for nine days ((unprinted), Tr. 181-1013a; printed portion found at R. 112-452). No facet of any such exhibit, no possible meaning, no possible significance was left unstated, at least to the limit of counsel's ability to conceive of them. After the arguments of counsel on such exhibits oral testimony was received with respect to the various actions of the defendant and alleged ambiguities in exhibits.

The trial court had the benefit of proposed findings of fact, which were detailed and contained specific references to evidence supporting such findings ((unprinted), Tr. 5803-5976, 6114-94), objections to and comments on each party's proposed findings by the other party ((unprinted), Tr. 6195-6244, 6245-6357), and extended briefs largely devoted to the facts ((unprinted), Tr. 3305-84, 6001-6113, 6358-6458, 6459-6644), which covered every fact with respect to which there could be any possible dispute between the parties.

This case was tried by an experienced and able trial judge, and we doubt that any trial judge has given more careful consideration to the evidence in a case than was given in this case.

Statement of Facts

For an understanding of Singer's motive, intent, purpose and attitude in its various actions in this case, including its acquisition of Gegauf Patent No. 1 after it had obtained a license thereunder, it must be appreciated that a member of Singer's Experimental Department, conceived and in-

vented and Singer developed and manufactured the *entire* multiple cam zigzag mechanism which is incorporated in the Singer "401" sewing machine and that the multiple cam mechanism so conceived and so incorporated in the 401 machine embodies, and Gegauf Patent No. 1 covers, the concept of a series of rotary cams having a single retractable cam follower shiftable relative to each other, lengthwise of the common cam axis, by means of a device mounted on the exterior of the machine, in order to select a particular cam for controlling the lateral movement of the needle.

When this is realized it can then be comprehended that every action Singer undertook in obtaining a license under and in acquiring Gegauf Patent No. 1 was to protect its own invention, its own investment and its own product, a product which it both manufactured and sold. As stated by the trial court, "Singer's sole interest was to protect its '401' machine against all infringing machines" (Op., R. 1693).

The Government attempts to avoid the significance of these facts by ignoring them. In its entire brief there is not even the sketchiest description of the 401 machine or of the coverage of Gegauf Patent No. 1.

I.

BACKGROUND OF SINGER-VIGORELLI AND SINGER-GEGAUF NEGOTIATIONS

A. Conception, invention and development of Singer 401 machine.

On April 29, 1953, Ralph Johnson, a member of Singer's Experimental Department who had been working upon the project, completed the design of a new household sewing machine with numerous entirely new features incorporated in it, including a new multiple cam zigzag mechanism (Op., R. 1663-64; Stip. Par. 17, R. 27-28; Gx. 183 (S-14), R. 1295-1321; Dx. 5, R. 1372; Dx. 106, Physical Exhibit). This date was *prior to* the introduction into the United States market of any sewing machine incorporating a multiple cam mechanism (Op., R. 1665; Stip. Par. 21, R. 29; Dx. 5, R. 1373), and *prior to* the discovery by Singer of any similar mechanism (Dx. 5, R. 1373; Gx. 1 (unprinted), Tr. 3427-34). The Government by its statement (Govt. Br. 9) carelessly would leave the impression that this took place after the importation of a Vigorelli machine in September 1953. As above set forth, the design of the Johnson machine, designated the Singer "401" machine, was completed more than four months prior thereto.

The 401 machine is disclosed *in toto*, including all of its various features, in the Singer owned Johnson United States Patent No. 2,862,468 (Stip. Par. 17, R. 28; Gx. 183 (S-14), R. 1295-1321). This new machine was to be Singer's star machine, the top of its line (Op., R. 1668-69; Gx. 190 (S-24), R. 1333; Stip. Par. 88, R. 56-57). Singer, by June 1959, had invested $9,000,000 in it, including $4,700,000 for tooling (Stip. Par. 112, R. 63). In 1959 the

401 machine represented 45 per cent. of the total dollar volume of Singer's entire household sewing machine business in the United States (Op., R. 1669; Stip. Par. 88, R. 56-57).

B. Description of 401 multiple cam mechanism.

The multiple cam mechanism invented by Johnson embodies *inter alia* the concept of a series of rotary cams having a single retractable cam follower shiftable relative to each other, lengthwise of the common cam axis, by means of a device mounted on the exterior of the machine, in order to select a particular cam for controlling the lateral movement of the needle[2] (Dx. 106B, Physical Exhibit; Stanford, R. 585; Gx. 183 (S-14), R. 1313, column 7, lines 61-75, column 8, lines 1-25, R. 1314, column 10, lines 12-21, R. 1315, column 11, lines 12-58). The Patent Examiner in the Johnson application proceeding considered such concept clearly embodied in the 401 mechanism as disclosed in the application and suggested to Johnson for interference a claim covering such concept, *word for word* in the form previously suggested to Gegauf for interference (Gx. 175, R. 1267-68; Gx. 184, R. 1328-29). The Examiner subsequently allowed and there is in the Johnson patent a claim in which *such concept* is specifically claimed *in conjunction with* another feature (Gx. 183 (S-14), R. 1324, Claim 23). Such claim, of course, is wholly subservient to Gegauf Patent No. 1. The Government concedes that Gegauf Patent No. 1, cover-

[2] Whenever used in this brief, "a stack of cams with a single cam follower" means a series of rotary cams having a single retractable cam follower shiftable relative to each other, lengthwise of the common cam axis, by means of a device mounted on the exterior of the machine, in order to select a particular cam for controlling the lateral movement of the needle.

ing the concept of a stack of cams with a single cam follower, covers the 401 machine (Stip. Pars. 92, 93, R. 57-58).

A stack of cams with a single cam follower is the primary and basic Johnson concept and is the basic feature and very heart of the 401 multiple cam mechanism (Stanford, R. 585). A simple examination of the mechanism itself fully demonstrates this fact (Dx. 106B, Physical Exhibit).

An ancillary feature of such multiple cam mechanism is a second follower which may be disengaged from any of the rotary cams and left immobilized or may be engaged and used to take information from a second cam to combine it with information taken by the primary follower (Dx. 106B, Physical Exhibit). This concept is covered by the Johnson patent (Gx. 183 (S-14), R. 1325). Harris and Gegauf having had earlier priority dates than Johnson on the concept of a stack of cams with a single cam follower (Op., R. 1672, 1678), foreclosed the coverage of such concept in the Johnson patent.

C. Conception, invention and development of Singer 306 and 319 machines.

During the period of the development of the 401 machine two other machines with zigzag mechanisms were invented, developed, manufactured and marketed by Singer. These were the 306 machine, incorporating a replaceable cam zigzag sewing mechanism (Op., R. 1664; Stip. Par. 18, R. 28; Dx. 109, Physical Exhibit) and the 319 machine, incorporating a multiple cam zigzag sewing mechanism (Op., R. 1664-65; Stip. Par. 19, R. 28-29; Dx. 110, Physical Exhibit).[3] Sale of the 306 machine was started both in the

[3] The 319 machine was a remodeled 306 machine in which, in addition to a replaceable cam, there was incorporated a multiple cam mechanism consisting of a built-in stack of cams, each with its own follower which could be used singly or in combination to track one

United States and abroad in 1954 (Op., R. 1664; Stip. Par. 18, R. 28). Sale of the 319 machine was started both in the United States and abroad in 1956 (Op., R. 1665; Stip. Par. 19, R. 29). Sale of the 319 machine was discontinued in the United States, except as to a small inventory on hand, in 1957, when it was superseded by the 401 machine (Op., R. 1665, 1668-69; Stip. Par. 19, R. 29; Gx. 190 (S-24), R. 1333). The 319 machine continued to be the important Singer zigzag machine sold abroad, selling in 1957 at the rate of 65,000 machines per year (Op., R. 1665, 1701; Stanford, R. 558; Stip. Par. 19, R. 29).

D. Introduction of multiple cam zigzag mechanisms into the United States and Singer's reaction thereto.

In September 1953, more than four months after completion of the Johnson design, the Italian firm of Vigorelli introduced into the United States a sewing machine incorporating a stack of cams with a single cam follower (Op., R. 1665; Stip. Par. 21, R. 29-30). Singer concluded that it must assume that Vigorelli had invented the zigzag mechanism contained in the Vigorelli machine prior to the time of the invention by Singer of the mechanism to be incorporated in its 401 machine and that it should be presumed that Vigorelli had on file in various patent offices in the world, including that of the United States, patent applications containing claims which would be infringed by the Singer design (Stip. Pars. 24, 25, R. 31; Op., R. 1670-71). Singer, however, felt

---

or more selected cams. The 319 machine being of substantially similar construction to that of the 306 machine, except insofar as their rotary cam mechanisms differed, tools for its production and assembly could be prepared in a short period with little expense (Op., R. 1664-65; Stip. Par. 19, R. 28-29). The 319 machine is disclosed in Perla Patent No. 2,810,360 (Op., R. 1665; Stip. Par. 19, R. 29).

confident that a manually controllable means for varying the amplitude of the lateral needle vibration incorporated in the Vigorelli machine infringed three Singer owned foreign patents (Gx. 1 (unprinted), Tr. 3429-30; Op., R. 1670-71).

From that time on Singer continuously sought information as to the extent of Vigorelli or other patents relating to the type of cam mechanism contained in the Vigorelli machines to determine whether any such patent could interfere with the manufacture and sale of the Singer machines any place in the world, including the United States (Op., R. 1670, R. 1674, lines 27-29, R. 1675, lines 24-26; Stip. Par. 26, 1st sentence, R. 31; Stip. Par. 27, 1st two sentences, R. 32; Stip. Par. 31, R. 34; Stip. Par. 32, next to last sentence, R. 34; Stip. Par. 35, 3rd sentence, R. 35-36). In the process, Singer sought information to determine whether it could limit or destroy claims of patents or patent applications claiming a multiple cam zigzag stitch mechanism which might interfere with Singer's machines (Stip. Par. 27, 1st two sentences, R. 32; Dx. 4, R. 1370-72; Dx. 6-9, R. 1376-83; Stanford, R. 463-64; Dx. 19, R. 1392-94; Dx. 21-26, R. 1395-1406; Stanford, R. 485-86).

The first Japanese-made sewing machine with a multiple cam zigzag sewing mechanism was introduced in the United States in September 1954 by Brother International Corporation. This machine, as the Singer 401 and the Vigorelli machine, incorporated a stack of cams with a single cam follower (Op., R. 1665-66; Stip. Par. 22, R. 30).

In April 1955, Singer learned that Vigorelli had introduced into the United States a modified form of its multiple cam machine. This modified form differed from the first machine in that in the modified form the single

cam follower was adapted not only to engage any one of the cams but in addition to engage any two adjacently disposed cams. This idea of taking information from two cams at the same time was embodied in the Singer 401 and 319 machines (Op., R. 1666, 1671; Stanford, R. 466-67; Stip. Par. 23, R. 30-31). This modified machine contained, as did the original, the manually controllable means for varying the amplitude of lateral needle vibration, which Singer felt confident infringed certain of its foreign patents (Op., R. 1671; Gx. 2 (S-1), R. 1018).

By April 22, 1955 Singer had procured copies of two Vigorelli Italian patents, Nos. 497,557 and 507,862, one of which covered the first Vigorelli multiple cam mechanism with its *stack of cams and single cam follower* and the second of which covered the modified form wherein the single cam follower was enabled to track *any two adjacent cams* (Op., R. 1671; Stip. Pars. 26, 27, R. 31-32; Stanford, R. 467; Dx. 10 (unprinted), Tr. 5192; Gx. 2 (S-1), R. 1017-18). The first said patent had a filing date prior to the conception date of the Johnson invention and thus had priority over Singer, both in the United States and abroad, on the concept of a stack of cams with a single cam follower. The second of such patents, covering the concept of taking information from two adjacent cams at the same time, had a filing date prior to the *filing date* of the Johnson *application* but subsequent to the *conception date* of the Johnson *invention*. This had the consequence of giving Vigorelli priority on such concept abroad and of giving Singer priority on such concept in the United States (Stanford, R. 467-69). Thus, on the concept of a stack of cams with a single cam follower, Vigorelli had priority over Singer both in the United States and abroad, and, on the concept

of taking information from two cams at the same time, Vigorelli had priority abroad but Singer had priority in the United States.

By May 2, 1955 Singer had concluded that Vigorelli would dominate both Singer's 401 and 319 machines in many European countries (Op., R. 1672; Stip. Par. 26, R. 31-32). Singer further concluded that, even in the United States, it would not be able to utilize in its 401 machine the ancillary concept of taking information from two cams simultaneously, notwithstanding its earlier United States priority date with respect thereto, due to the fact that a Vigorelli United States patent on a stack of cams with a single follower would enable Vigorelli to prevent Singer from using this basic feature of the 401 mechanism, an obvious prerequisite to the use of a second cam follower (Stanford, R. 469).

E. Purchase by Singer of the Harris United States patent and corresponding foreign patents on June 10, 1955.

In the course of Singer's continuous search for patents which could destroy or limit the scope of Vigorelli's patents, Singer found a United States patent which had been issued to one Carl Harris. This patent disclosed, but did not claim, a sewing machine having a plurality of cams with a single cam follower (Op., R. 1672; Stip. Par. 27, R. 32; Stanford, R. 471). Singer believed, *and the Government has stipulated,* that this patent could be reissued with claims covering the type of mechanism incorporated in the Singer 401, the Singer 319, the Vigorelli and the Brother machines (Stip. Par. 27, R. 32; Gx. 3, R. 1019). Singer believed that such a reissued patent would dominate all such machines because that

patent had been filed in the United States on June 9, 1952 prior to any use or patent priority date then known to Singer (Stip. Par. 27, R. 32).

Singer purchased the Harris patent on June 10, 1955 and on June 16 filed a reissue application setting forth the four original claims contained in the Harris patent, which did not relate to a multiple cam mechanism, and eight proposed reissue claims (Stip. Par. 28, R. 32; Op., R. 1672). Singer knew that not only it but anyone else could purchase this patent and file a reissue claim (Stanford, R. 471). It purchased the patent for the purpose of reissuing it with claims which would protect its machines (Op., R. 1672; Stip. Par. 27, R. 32; Stanford, R. 471-72). The Government in no way challenges the acquisition of this patent and concedes the propriety thereof (Op., R. 1654-55; R. 166), stating that the acquisition of such patent "did not contribute at all to the offenses which we allege here" (R. 209).

In connection with the acquisition of the United States Harris patent, Singer acquired corresponding Harris patents or patent applications in Great Britain, Germany, Canada, France, Japan, Italy, Sweden and Belgium. Singer thereafter endeavored to determine whether the various foreign Harris patents and applications could be amended to insert claims therein similar to those inserted in the United States reissue application (Stip. Par. 30, R. 33-34; Stanford, R. 475-76). Singer ascertained that no amendment to the Harris Italian patent was permissible, that whatever is new and revealed by an Italian patent is considered, under the law, as fully protected independently of any claim that might be made with respect thereto (Dx. 129, R. 1530; Stanford, R. 476-77, 480) and that, short of litigation, it could not determine

whether the Harris Italian patent, as originally filed by Harris, would be so construed as to give Singer priority in Italy as well as in the United States (Dx. 129, R. 1530; Op., R. 1672-73).

II.

SINGER NEGOTIATES FOR AND ENTERS INTO THE SINGER-VIGORELLI CROSS-LICENSE AGREEMENT OF NOVEMBER 17, 1955

A. Singer concludes that litigation with Vigorelli will result unless a cross-license agreement is made.

Acquisition of the Harris patent changed considerably the relative positions of Singer and Vigorelli. Singer now had claims filed covering a plurality of cams with a single follower which had a priority date six months prior to the first Vigorelli patent covering the same concept. Singer therefore now was ahead of Vigorelli in the United States on both the stack of cams with the single cam follower and on the ability to take information from two cams at once. Vigorelli, however, could dominate the Singer 401 and 319 machines in numerous foreign countries (Stip. Par. 33, R. 34-35).

By August 16, 1955 Singer concluded that it was probable that it and Vigorelli would become involved in litigation unless a cross-license agreement could be made (Stip. Par. 32, R. 34; Dx. 12, R. 1385-87). Singer saw that to protect its machines against Vigorelli domination Singer would have to oppose Vigorelli in each country in which Vigorelli might choose to file (Op., R. 1673; Dx. 12, R. 1385-87; Gx. 4, R. 1022-23) and Vigorelli reported that he had patents or patent applications pending in seventeen countries (Gx. 19, R. 1051-52).

B. Singer seeks conference for purpose of arranging cross-license agreement with Vigorelli.

Singer conducted correspondence with its representative in Italy concerning the making of arrangements for a conference with Vigorelli (Stip. Par. 32, R. 34; Stanford, R. 477-82; Dx. 12-13, R. 1385-88; Gx. 4, R. 1022-25).

The Government quotes from a Lightner letter to Singer's representative a statement to the effect that while Singer could use its patents and patent applications to "make trouble for Vigorelli" it would be preferable and "would greatly strengthen and broaden the patent situation if our position and theirs could be pooled by some mutual agreement" (Govt. Br. 10). Here, by quotation out of context, the Government would establish a purpose and intent by Lightner to pool patents, a purpose and intent directly contrary to that found by the trial court. Not only the letter quoted but an earlier letter from Lightner (Dx. 12, R. 1386) showed that the kind of agreement Lightner was seeking was a pure cross-license agreement. Stanford so understood (R. 482) and the trial court so found, stating: "We find that in approaching and in bargaining with Vigorelli, Singer *was at all times* dealing at arm's length, solely in its own interest *for the purpose and with the intent of reaching a cross-licensing agreement*" (Op., R. 1677, emphasis supplied).

Singer, in the foregoing correspondence, showed that it was preparing to do battle with Vigorelli if called upon to do so and cited to its representative, not to Vigorelli, the weapons it had for such a battle. It, in fact, had a strong arsenal consisting, in part, of its Harris foreign patents and patent applications and, in part, of the fact that Vigorelli's machines infringed at least two other Singer foreign patents, one in France and one in Great

Britain (Stanford, R. 479-82; Dx. 12, R. 1386, 1st full paragraph; Gx. 4, R. 1023, 2nd full paragraph). Singer, however, wanted to avoid conflict, possibly throughout the world, and sought simply a cross-license agreement under which each would be free to sell its machines (Op., R. 1677, 2nd full paragraph; Stanford, R. 478, 482; Dx. 12, R. 1386, 1st full paragraph).

C. Singer learns of Gegauf patent and it becomes imperative that Singer come to an agreement with Vigorelli.

On October 10, 1955, Singer, through Vigorelli, for the first time heard of a Gegauf patent covering a multiple cam mechanism which, according to Vigorelli, had been deposited by Gegauf in a small number of countries and heard that Vigorelli was negotiating with respect to it (Op., R. 1674; Stip. Par. 35, R. 35). Near the end of October 1955 Singer obtained a copy of Gegauf Italian Patent No. 501,172. This patent disclosed (1) a stack of cams with a single cam follower; and (2) a stack of cams with each cam having its own individual follower. This Gegauf Italian patent enjoyed an effective priority date in Italy of May 31, 1952 based on a Swiss application priority date of May 31, 1952 (Op., R. 1677-78; Stip. Par. 36, R. 36). This date was nine days earlier than the priority date of the Harris patent.

The fears aroused in Singer for the future of its 401 and 319 machines by the discovery of the original Vigorelli machine and then the Vigorelli patent were now further sharpened by the discovery of this even earlier Gegauf patent, which, according to Vigorelli, had also been deposited in the United States (Op., R. 1674). It was imperative that Singer come to some immediate agreement with Vigorelli, for the alternative of pressing the Harris reissue patent had lost its value, since Singer

feared that, if it did push this application, it would be revealing to Vigorelli and Gegauf the weakness of its position, vis-a-vis Gegauf (Op., R. 1674-75; Stanford, R. 489). With respect thereto the trial court stated: "• • • In truth, Singer's back was against the wall in this matter and it was only thru swift and clever tactics that it was able to wrest some sort of victory out of what promised to be total defeat or at best a Pyrrhic victory" (Op., R. 1675).

D. Singer and Vigorelli enter into a cross-license agreement.

A conference with Vigorelli was arranged and on November 17, 1955 Singer and Vigorelli entered into a written cross-license agreement (Gx. 11 (S-2), R. 1032-35; Stip. Pars. 32, 34, R. 34-35). Under this agreement Singer granted a non-exclusive, royalty-free license to Vigorelli to manufacture and sell sewing machines embodying subject matter disclosed in the two Italian patents owned by Vigorelli, being Nos. 497,557 and 507,862, which patents disclosed, respectively, the first Vigorelli multiple cam zigzag machine and the modified form of such machine, and Vigorelli in turn granted a non-exclusive, royalty-free license to Singer to manufacture and sell sewing machines embodying subject matter disclosed in the United States Harris Patent No. 2,693,778 and the United States Johnson Application No. 471,766 and the United States Perla Application No. 473,855, which applications disclosed, respectively, the Singer Class 401 and 319 machines (Op., R. 1676; Gx. 11, R. 1032-33).

The agreement contained further provisions by which each of the parties agreed not to attack the other's patents in opposition, nullity or invalidation proceedings, which

were intended to and did apply to countries in which such proceedings were available, and by which it was agreed that in other countries, such as the United States and Canada, the parties would work together to settle interference or conflict proceedings in accordance with the laws and regulations of the Patent Office concerned (Op., R. 1676; Gx. 11, R. 1034; Stanford, R. 486-88).

With respect to the Singer-Vigorelli agreement the trial court said: "• • • It can hardly be seriously contended that the agreement was a preliminary step to effectuate a conspiratorial plan or an attempt to monopolize" (Op., R. 1675).

With respect to Singer's purpose the trial court found: "• • • Singer's purpose in entering into the cross-licensing agreement with Vigorelli was to secure to Singer the ability to sell its '401' and '319' machines in the various foreign countries where sale might otherwise have been foreclosed by enforcement of the Vigorelli patents, or at least to be free from the threat of litigation with respect to these patents" (Op., R. 1677).

III.

SINGER NEGOTIATES FOR AND ENTERS INTO THE SINGER-GEGAUF CROSS-LICENSE AGREEMENT OF APRIL 14, 1956

A. Singer, by January 1956, concludes that it is in serious difficulty with its 401 machine in the United States.

After Singer in October 1955 obtained a copy of the Gegauf Italian Patent No. 501,172, which enjoyed an effective priority date in Italy of May 31, 1952 based on a Swiss application priority date of May 31, 1952, it appeared to Singer that patents in many of the principal

countries of the world might be allowable to Gegauf which would be infringed by the Singer Class 319 and 401 machines (Stip. Par. 36, R. 36).

Continuing the endeavor which it previously had made to find material with which to limit or destroy claims of patents or patent applications claiming a multiple cam zigzag stitch mechanism which might interfere with Singer's machines, Singer, upon hearing of the Gegauf patent, immediately wrote its representative in Japan requesting that he obtain, if possible, any material antedating the filing of Gegauf's Swiss patent on a machine with a plurality of rotary cams and means for selectively connecting any one of the cams with the needle bar (Stanford, R. 485; Dx. 19, R. 1392-93).

In December 1955, Singer heard that Gegauf and Vigorelli had entered into a cross-license agreement relating to their respective multiple cam patents similar to the Singer-Vigorelli agreement (Op., R. 1678; Stip. Par. 38, R. 37).

In January 1956, Singer, by an examination of the United States Patent Office assignment records, learned that Gegauf had pending in the United States an application bearing serial number 358,377, which had been executed in Switzerland on May 20, 1953. Singer assumed that the United States application was based on the Swiss application and that it enjoyed a priority date of May 31, 1952, nine days earlier than the priority date of the Harris patent (Op., R. 1678; Stip. Par. 36, R. 36; Stanford, R. 490).

In January 1956, Singer was unofficially advised by the United States Patent Office that the claims of its United States Harris reissue application were allowable over the known issued patents. Singer knew that it would follow

that if such claims were contained in the Gegauf United States application they would be allowable in such application (Stip. Par. 37, R. 36-37; Op., R. 1678).

Upon learning from its representative in Japan that he had been unable to discover any material which would antedate the filing of Gegauf's Swiss patent (Dx. 21-26, R. 1395-1406), Singer concluded that it was in serious difficulty with its 401 machine in the United States (Stanford, R. 485-86).

B. Singer concludes that it would be to its advantage to negotiate with Gegauf for a cross-license agreement while Singer knows and Gegauf does not know that Gegauf has the earlier priority date.

In view of the foregoing, Singer was anxious to negotiate an agreement with Gegauf "similar to the one it had with Vigorelli" (Op., R. 1678; Stip. Pars. 37-38, R. 37). Singer, however, feared that an interference might be declared between the Harris reissue and the Gegauf application which would disclose to Gegauf for the first time its nine day priority. With knowledge that Gegauf had such priority, which knowledge Gegauf could not possess,[4] Singer felt that it would be in a better bargaining position, and accordingly wished to conclude such an agreement, prior to rather than after such disclosure (Op., R. 1678; Stip. Par. 37, R. 37; Stanford, R. 492-93).

[4] If Harris, a resident and citizen of Canada, had *disclosed* his invention in the United States prior to his filing date, his priority date could have been earlier than his filing date. Singer, however, knew that Harris could not so push back his priority date (Dx. 31, R. 1414, 1st full paragraph; Govt. Br. 50), a matter upon which Gegauf could have no knowledge unless Singer disclosed its weakness; whereas, in an interference proceeding disclosure of the relative positions would be forced.

C. Singer does not feel that it is in a good bargaining position because it can oppose allowance of a claim to Gegauf in an interference proceeding.

Singer did not, as the Government asserts (Govt. Br. 12-13), consider itself to be in a "good bargaining position" because, in an interference proceeding, it could oppose the final allowance to Gegauf of broad United States claims covering multiple cam machines. In support of its assertion the Government cites R. 1043 where Stanford asserted that Singer's chance of negotiating a cross-license agreement "would be greatly enhanced" and that Singer "would be in the better bargaining position" *prior* to an interference. The Government thus reverses the statement actually made by Stanford. Nor does the quotation set forth in footnote 13 (Govt. Br. 13) support the Government's assertion. All that Stanford was there saying was that with the Harris reissue application Singer could get into interference with Gegauf and could there oppose allowance of broad claims. Stanford in no way indicated that "an opportunity to oppose" would offer the slightest prospect of success. The record is clear that Singer (1) had searched the world in an endeavor to get material with which it could limit or destroy the Vigorelli and Gegauf claims (pp. 10, 19, 20, *supra*), (2) upon hearing from its representative in Japan that he had been unable to discover any material which would antedate Gegauf's filing date, concluded that it was in serious difficulty with its 401 machine in the United States (Stanford, R. 485-86), (3) had been officially advised by the Patent Office, and was fully confident, that Singer had an allowable claim (C R. 1678-81; Stip. Par. 37, R. 36; Stanford, R. 588; Op., R. 1678, 1681), and (4) was similarly confident that such claim could be awarded to Gegauf because of Gegauf's earlier priority date (Gx.

16, R. 1044, 1st full paragraph). The Government has even stipulated that it appeared to Singer that patents in many of the principal countries of the world might be allowable to Gegauf (Stip. Par. 36, R. 36), and the trial court found that Singer when entering into the license agreement "felt sure" that Gegauf would be awarded the claim (Op., R. 1681). An "opportunity to oppose" in a known losing cause, whatever its value otherwise might be, does not make one feel that he is "in a good bargaining position".

Here again the Government sets forth a fact contrary to a finding of the trial court. The Government asserts as a fact that Singer thought that it was in good bargaining position because it could oppose final allowance of broad claims in the United States. The trial court specifically found that Singer "felt sure" that Gegauf would be awarded the claim (Op., R. 1681).

D. Singer prepares to negotiate with Gegauf, February-March 1956.

In February 1956, Singer began preparations for a possible conference with Gegauf. It asked its representative in Italy to use an excuse for an informal approach to Vigorelli in order to obtain from him information as to how Vigorelli had induced Gegauf to drop its demand for $160,000, information obviously important to Singer in preparing for negotiations with Gegauf (Op., R. 1678; Stip. Par. 38, R. 37; Stanford, R. 493-94).

As a result of Singer's inquiries, its Italian representative reported that Vigorelli reported that Gegauf had consented to an agreement without the payment of any monetary consideration for a variety of reasons, which could be summarized as: (1) Gegauf's Italian patent was poorly

drawn; (2) Gegauf had applied for patent protection in only four countries, whereas Vigorelli had patents or applications in seventeen countries; and (3) Vigorelli was aware of certain patents which Gegauf considered dangerous to Gegauf's various applications (Op., R. 1679; Stip. Par. 39, R. 38). In connection with item (3), there is no evidence that there was in fact any patent which in any way interfered with or endangered Gegauf's invention of a stack of cams with a single cam follower (*infra*, p. 83).

Vigorelli was not told and did not know the purpose for which the above mentioned information was wanted. Vigorelli assumed that Singer sought such information for the purpose of combating Gegauf in the United States. Singer purposely kept Vigorelli from knowing why it wanted the information or that there was to be a conference between Gegauf and Singer (Op., R. 1678-79; Gx. 19, R. 1053), and later Singer issued express instructions to its representatives *not* to advise Vigorelli of Singer's coming conference with Gegauf (Dx. 29, R. 1410; Dx. 27; R. 1407, last paragraph).

E. Singer negotiates with Gegauf, April 12, 1956.

Shortly after receiving the above mentioned information from its Italian representative, Singer through its office in Switzerland made arrangements for a conference with Gegauf and representatives of Singer and Gegauf met on April 12, 1956 in Steckborn, Switzerland (Stip. Par. 39, R. 38).

(1) *Singer has no acquaintanceship with Gegauf, but is in a position where it is essential that Singer obtain a license from Gegauf.*

Singer had no prior acquaintanceship with Gegauf and had no knowledge as to the best manner of approaching Gegauf or as to the person in the Gegauf organization with whom any appointment should be made (Stanford, R. 497; Dx. 27, R. 1407; Dx. 28, R. 1409; Gx. 17, R. 1046-47; Gx. 18, R. 1048-49).

In entering into negotiations with Gegauf, Singer knew facts which made it essential that Singer obtain a license from Gegauf, namely (1) Gegauf had a patent issued in Switzerland with a priority date nine days earlier than the Harris patent, the principal claim of which read directly on the basic feature of the Singer 401 multiple cam mechanism; (2) Gegauf had an application pending in Germany which might mature into a patent which would read upon the 319 and 401 machines and Gegauf had an Italian patent, although it might be subject to question due to the manner in which it was drawn; (3) Gegauf had filed a United States application the claims of which Singer presumed would read on the Singer 401 and 319 machines (Op., R. 1679-80; Stip. Par. 40, R. 38-39); and (4) Singer's Swiss patent counsel had examined Gegauf's Swiss patent and advised Singer that Gegauf's patent was valid and that it was highly desirable for Singer to enter into an agreement with Gegauf (Stanford, R. 500-01; Dx. 31, R. 1411-12).

(2) *Attitude and feelings of the respective parties in bargaining.*

Singer's objective was to keep Gegauf in the dark as long as possible and to disclose only what was absolutely necessary to the effectuation of Singer's plans (Op., R.

1679; Stip. Par. 37, R. 37, last sentence; Dx. 27, R. 1407, last paragraph; Dx. 28, R. 1408; Dx. 31, R. 1417, 2nd full paragraph; Gx. 19, R. 1043, 1st full paragraph; Stanford, R. 489, 492-93). Singer approached Gegauf in substantially the same manner it had approached Vigorelli, that is, with intimations of litigation (Op., R. 1679; Gx. 24, R. 1063-64; Dx. 28, R. 1408-09). In this instance, however, Singer mentioned only its United States and foreign Harris patents and patent applications, not wanting Gegauf to know anything about its United States Johnson and Perla applications (Dx. 31, R. 1417; Gx. 26, R. 1066; Dx. 31, R. 1417). Gegauf had a feeling of assurance and showed that he felt that his position was superior to Singer's. He appeared to be suspicious of Singer's intentions and believed that Singer wanted to make an identical copy of his machine (Op., R. 1680; Stanford, R. 500; Dx. 30, R. 1411; Dx. 31, R. 1413, 1415; Gx. 24, R. 1063).

(3) *Singer urges that litigation be avoided so that patents may issue. The obtaining of broad claims or patents was not discussed or mentioned.*

In the course of a general discussion relating to numerous problems in the sewing machine business, Gegauf—not Singer but Gegauf—expressed fear that the Japanese machines then coming into the United States market would be sold at a lower price than the Gegauf machines because of the Japanese low priced labor (Stanford, R. 498-99; Gx. 24, R. 1061-62). Singer, believing that it had found a "lever" which it could use in the negotiations with Gegauf, pointed out that in the absence of an agreement Gegauf and Singer might litigate for a protracted period and argued that Singer and Gegauf should not be fighting each other as that would delay the

issue of their respective patents and said that they should license each other and get their respective patents "so they could be enforced by whoever would own the particular patent" (Stanford, R. 499).

In a memorandum relating to this conference, Waterman, a Singer representative, referred to Gegauf's fear of the Japanese and said that the Singer representatives did not do anything to cause Gegauf's fears to be other than along the line he was thinking "because one of the strong points" of their argument for the agreement between the two companies was "in order to fight against this Japanese competition in their building a machine *that in any way reads on the patents of ourselves and of Bernina [Gegauf] which are in conflict*" (Gx. 24, R. 1062, emphasis supplied). Such statement referred to Singer's argument that the companies, instead of fighting each other, should license each other and obtain their respective patents so that each could enforce his own patent (Stanford, R. 499; Op., R. 1683, lines 4-8, 22-26; Dx. 31, R. 1416, 2nd sentence of 1st full paragraph; Op., R. 1684; Stanford, R. 505-06; Stip. Par. 64, R. 45; Gx. 27 (S-7), R. 1069, 2nd and 3rd sentences of 1st full paragraph and 5th sentence of 2nd paragraph). But Singer knew, although not so saying to Gegauf, that Gegauf would get the claim and Singer would not. This is a type of argument used regularly in support of endeavors by one in an inferior position to obtain a cross-license agreement from one in a superior position. It catered to Gegauf's fear by picturing Gegauf as being able to enforce its patent earlier if litigation were avoided or, in other words, *if Singer got its license.*

Not a word was set forth in Waterman's memorandum as to obtaining broad claims or claims as broad as possible and there is no evidence that the subject of broad claims

was ever mentioned. The Government, in recognition of the findings of the trial court, concedes that it does not contend that there was any agreement "express or implied" in addition to the written agreements (Govt. Br. 27). How then can it contend that there was a prior oral agreement or understanding that Gegauf and Singer would seek broad claims? The Government nevertheless grasps Singer's argument that the parties would be better off if they refrained from fighting each other and obtained their respective *patents* and attempts to convert that argument into an agreement or understanding that they would obtain "broad" patent claims (Govt. Br. 62-63). There is not a scintilla of evidence to support the Government's contention, or that broad claims were even mentioned, and its own conclusion that such *must* have been the discussion between the parties is a complete non sequitur. Singer's argument against fighting each other was sound, whether a broad or a narrow patent would issue, and the Government offers nothing that makes it applicable only to a concept of obtaining a "broad" patent. The Government is destitute of any proof whatever that the parties discussed or in any way suggested the obtaining of a "broad" patent and when analysis is made it will be found that the Government must resort solely to the written provisions contained in the second sentence of Clause 1 of the cross-license agreement. This we deal with in Point I, *infra*, pp. 72-86.

F. Singer and Gegauf enter into a cross-license agreement.

On April 14, 1956 Singer and Gegauf entered into a non-exclusive, royalty-free cross-license agreement (Gx. 26 (S-3), R. 1066-68). The agreement listed the Singer

owned Harris Patent No. 2,693,778 and the Harris reissue Patent Application No. 516,059 *and nine specified corresponding foreign patents and patent applications* (British, Belgian, Canadian, French and Italian patents and Canadian, German, Japanese and Swedish patent applications). *It also listed the Gegauf Swiss Patent No. 310,788, and the Gegauf Italian and German patents Nos. 501,172 and 1,707,338 respectively; and the United States and German applications Nos. 358,377 and 11,654 respectively* (Op., R. 1681; Gx. 26 (S-3), R. 1066).

Under the agreement, Singer agreed not to sue Gegauf on the basis of any of its above mentioned patents or patent applications and in addition agreed not to sue Gegauf for the then existing construction of the Gegauf multiple cam machine. Gegauf agreed not to sue Singer on the basis of any of its above mentioned patents or patent applications (Op., R. 1682; Gx. 26 (S-3), R. 1067). The agreement also provided that the parties would not bring opposition, nullity or invalidation proceedings in countries where such proceedings were available, and that they would settle interference proceedings, where such proceedings were available, in accordance with the laws and regulations of the Patent Office concerned (Point I, *infra*, pp. 66-86).

As noted above, Singer's agreement was limited to the Harris patent. No mention, either in the agreement or in the negotiations, was made of Singer's Perla or Johnson applications. Singer did not want Gegauf to know of such applications (Dx. 31, R. 1417; Op., R. 1683).

G. The license was vital to Singer's welfare, obtaining it was entirely proper, and the agreement as signed constituted the entire agreement of the parties.

The license that Singer obtained was vital to its welfare and the license provisions were the essence of the agreement and were considered so by the parties (Op., R. 1682; Dx. 31, R. 1414; Gx. 58 (S-10), R. 1108, 2nd paragraph). Gegauf's invention squarely covered Singer's 401 machine and a United States patent, conceded by the Government to be valid, was to issue on Gegauf's application, a patent which would have foreclosed the entire United States market to Singer's 401 machine (Op., R. 1660, 1712; Stip. Par. 93, R. 58). The Government concedes that the obtaining of the cross-license by Singer was entirely proper, saying that Singer "had every right" to get the cross-license (R. 207) and that "the Government has made no contention that the cross-licensing was unlawful" (R. 1650).

The Singer-Gegauf cross-license agreement constituted the entire understanding of the parties. Other than as set forth in the agreement itself there was no agreement or understanding between Singer and Gegauf as to how either would prosecute, license or otherwise restrict its ownership of any patent (Op., R. 1683; Stanford, R. 458-59, 460-61, 504-05).

H. A possible purchase of Gegauf's patent application was never mentioned by Singer or Gegauf.

At no time, either prior to or during the negotiations with Gegauf, was any mention made of a purchase or a possibility of a purchase by Singer or a transfer to Singer of the Gegauf United States application (Op., R. 1683; Stanford, R. 506-07; Stip. Pars. 63, 64, R. 44-45; Dx. 31, R. 1418; Gx. 27 (S-7), R. 1070).

I. Before the trial court the Government conceded that this agreement was executed prior to the commencement of the alleged conspiracy.

The Government now contends that the Singer-Gegauf cross-license agreement of April 14, 1956 was part of a conspiracy consisting of a "course of concerted conduct" intended to further a joint purpose of eliminating common competitors (Govt. Br. 23). Its position before the trial court, as late as after the conclusion of the trial, was that such agreement was *not* part of the conspiracy it alleged. In its Memorandum Relative to Defendant's Proposed Findings, filed September 20, 1961, the Government advised the trial court:

> "The Government has made no contention that the cross-licensing was unlawful. It was *after* the defendant had acquired royalty-free patent rights that *it entered into the conspiracy alleged* and attempted to monopolize by acquiring full title to the patents or patent applications *under which it had already* been licensed." (R. 1650, emphasis supplied; see also Plaintiff's Post-Trial Brief (unprinted), Tr. 6377)

IV.

SINGER NEGOTIATES FOR AND ENTERS INTO GEGAUF-SINGER ASSIGNMENT AGREEMENT OF DECEMBER 5, 1957

A. Singer rejects Vigorelli proposal for joint action, April 20, 1956.

Approximately a week after the Gegauf cross-license agreement was executed, a meeting, asked for by Vigorelli, was held in Milan, Italy, between Singer and Vigorelli. At that meeting Vigorelli expressed a feeling that Singer, Gegauf and Vigorelli, having arrived at their respective

agreements, should thereafter act in concert against others. Singer promptly told Vigorelli that Vigorelli's suggestion would be impossible, that Singer could not make any agreement to take any action whatsoever with respect to any Singer owned patent. Singer stated that any action that was taken would have to be taken by the respective parties.[3] Upon Vigorelli's learning that there would be no joint action on prosecuting patents against others, the subject was dropped (Op., R. 1684; Stanford, R. 505-06; Stip. Par. 64, R. 45; Gx. 27 (S-7), R. 1068-71).

B. Singer lays the foundation for an approach by a third party to Gegauf's attorney with the idea that Singer could enforce the Gegauf patent better than Gegauf could and with the suggestion that Gegauf sell the Gegauf application to Singer.

As the aforesaid meeting was about over, Majnoni, who had acted as Vigorelli's patent attorney, went over to Stanford and stated that he would like to speak to him in English, apologizing that he spoke very little English. Majnoni asked about the situation in the United States between the Gegauf and the Harris reissue applications (Stanford, R. 507). In the immediately preceding conference with Gegauf, Stanford and Waterman had considered bringing up the subject of the purchase of Gegauf's application by Singer but had decided not to say anything to Gegauf "at this time" (Gx. 27 (S-7), R. 1070). Stanford had said that "there is a time and

[3] This reflects a somewhat similar attitude to that displayed by Singer when Messerschmitt proposed a division of territories among sublicensees and Singer pushed it aside "very quickly", asserting that such action was "under no circumstance" acceptable because it would constitute an infringement of the United States antitrust law and when it declined to have such an agreement "though not expressed", insisting that the written agreement must be complete and entirely truthful in all respects (Op., R. 1703-04).

place for everything, and we did not think that this was the time" (Dx. 31, R. 1418). Taking advantage of Majnoni's question, Stanford replied that such applications probably would be in interference shortly, that he was very much afraid that Gegauf would win the interference, and that he was sorry (Op., R. 1685; Stanford, R. 507) and Stanford advised Majnoni that, if Singer owned the Gegauf patent, Singer would be able to enforce it "better perhaps than Gegauf could" (Govt. Br. 15; Stanford, R. 507-08; Gx. 27 (S-7), R. 1070; Stip. Par. 64, R. 45). Stanford added that Singer had not broached to Gegauf the subject of the purchase by Singer of Gegauf's United States application because Singer thought that if it ever did, the price would go sky high and there would be no chance of making an agreement (Op., R. 1685; Stanford, R. 507-08; Gx. 27 (S-7), R. 1070; Stip. Par. 64, R. 45).[6] Majnoni volunteered to approach Gegauf's attorney, whom he knew, with the idea that Singer could enforce the Gegauf patent better than Gegauf could and with a suggestion that Gegauf sell such application to Singer. Stanford said that Singer would have no objection but that Singer did not wish itself to do this and would not want the suggestion to be made to Gegauf at this time as coming from Singer (Stanford, R. 507-08; Gx. 27 (S-7), R. 1070; Stip. Par. 64,

[6] Thus Singer started directing its attention to the acquisition of Gegauf's patent immediately after it entered into the cross-license agreement with Gegauf and not, as the Government contends, after a period of two months during which Singer *came to believe* that "there was reason for Gegauf and itself both *to be dissatisfied* with the *protection they were receiving* against their Japanese competitors" (Govt. Br. 34, emphasis supplied). How anyone could have expected to obtain "protection" against Japanese competitors under a cross-license agreement granting licenses under patent applications on which no patent had been issued, is not explained by the Government.

R. 45). Majnoni stated that he thought it would be "advantageous" if Singer owned the patent that would issue on the Gegauf application. Stanford's understanding of what Majnoni meant was that it would be better for Vigorelli if Singer, which was a corporation in the United States, owned such Gegauf patent and that Vigorelli would rather have Singer own such patent than Gegauf because Singer "could enforce it better or was in a better position to enforce it" (Stanford, R. 507-09).

Stanford expected from Majnoni nothing more than that he make the suggestion to Gegauf that Singer could enforce the United States patent better than Gegauf could and that Gegauf sell its United States application to Singer. Singer did not, directly or indirectly, authorize Majnoni to do more or consent to his doing more (Op., R. 1685; Stanford, R. 507-09; Gx. 27 (S-7), R. 1070; Stip. Par. 64, R. 45). As stated by the trial court, "There is no evidence, however, that his [Majnoni's] authority extended to anything more than to effect a rapprochement between Singer and Gegauf" (Op., R. 1685).

The trial court's findings at R. 1685-86 do not support the Government's assertion that *"At Singer's request,* within *two months* of the conclusion of the first Singer-Gegauf agreement, *Vigorelli* undertook to convince Gegauf of the desirability of assigning its application to Singer *'for broader protection in the United States by Singer's invoking the Harris and Gegauf patents'"* (Govt. Br. 34-35). In the first place, the trial court did not find that Vigorelli did anything. It found that in September (not June as asserted by the Government), long after Majnoni had performed the only function that was authorized or consented to by Singer, *Majnoni reported* that *Majnoni had advised* Gegauf *that "Vigorelli might agree"* to a withdrawal of its application if Gegauf placed his applica-

tion at Singer's disposal "for broader protection in the United States by Singer's invoking the Harris and Gegauf patents" (R. 1685-86). This hearsay report becomes quite absurd, and any such suggestion on the part of Singer would have been absurd, when it is realized that there could be no possibility of any advantage arising from enforcing the Harris reissue patent in addition to enforcing the Gegauf patent. With the claim that was in interference between them allowed to Gegauf and removed from the Harris reissue application, there would be nothing left in the resultant Harris patent that could make it advantageous to enforce it in addition to the Gegauf patent. Not a single machine could be excluded by the Harris reissue patent that could not be excluded by the Gegauf patent alone (Dx. 137, R. 1540; Stip. Par. 29, R. 33; Stanford, R. 587-88) and the Government so conceded before the trial court (R. 150; see also p. 92 hereof). When Majnoni's reference to "broader protection" by invoking the "Harris and Gegauf patents" is analyzed it becomes quite apparent that such concept was his own and his only, and that that concept was wholly erroneous.

The trial court found that no agreement was made or understanding reached that Singer would use in any way, either alone or in combination with any other patent, any patent owned or acquired by Singer (Op., R. 1695; Stanford, R. 508-09). There is no evidence of any mention of Japanese competitors.

C. Singer inquires as to whether Gegauf would be interested in selling the Gegauf patent application to Singer. Singer prepares for conference, August-September 1956.

In the summer of 1956, Gegauf, Jr. and his sister went to a sewing machine convention in Kansas City, Missouri. On the way home they met with Waterman and Stanford at

the Singer offices in New York City (Op., R. 1686; Stip. Par. 67, R. 46). Gegauf, Jr. expressed concern over the number of Japanese machines that he had seen at the convention. Here again Stanford and Waterman found an opportunity to employ Gegauf's concern to Singer's advantage. Wanting the Gegauf patent, they stressed to Gegauf, Jr. the difficulties of enforcing a patent in the United States. They pointed out various problems, including the large number of importers, the size of the United States, the number of judicial circuits, the difficulty of finding out who was selling infringing machines and the difficulty of finding the importer of such machines, which arose because it was impractical to sue every retailer. They said that these all presented problems to the owner of a United States patent, that, being in the United States, Singer could enforce the patent better than Gegauf could, and they asked Gegauf, Jr. whether he thought his father would be interested in selling the patent to Singer (Op., R. 1686; Stanford, R. 513-14).

On September 3, 1956, Gegauf, writing to Waterman, referred to the visit of *"Mr. Gegauf junior"* to New York and stated that Singer's "suggestion" to Gegauf, Jr. as to the pending Gegauf United States application had been taken up with *"Mr. Gegauf senior"* and that Gegauf might be interested in such an agreement. The letter thereupon requested Singer to "put your suggestion in writing" (Gx. 33, R. 1079). (As set forth above, the only suggestion which had been made to Gegauf, Jr. was in the form of an inquiry as to whether Gegauf, Sr. would be interested in selling such application to Singer.) The letter further stated: "We agree that something should be done against Japanese competition in your country and maybe South America • • •" (Gx. 33, R. 1079).

Waterman, obviously wanting to see the minute details of what Gegauf had for sale, did not put in writing his previous "suggestion" that Gegauf might sell his patent application to Singer. Instead, by letter of September 7, 1956, he asserted that Singer felt that an arrangement could be equally advantageous to both and that Singer believed that time would be saved if Gegauf's New York attorney were to meet with Stanford "with authorization from you to disclose contents of patent application" (Gx. 35, R. 1080).

On September 12, 1956 Stanford wrote to Gegauf's New York patent attorney stating that Singer was interested "in acquiring all the rights" in Gegauf's application and that Stanford would like to have knowledge of the file contents before leaving for Europe (Gx. 36, R. 1081), and an examination of the application was arranged for and made (Stip. Par. 69, R. 46).

D. Gegauf refuses to sell for less than $250,000 and Singer terminates the negotiations, September 1956.

Arrangments were made for a conference with Gegauf to be held on September 23, 1956 in Landau, Germany (Op., R. 1686; Stip. Par. 69, R. 46). Before going to such conference Stanford prepared, in New York, forms of assignment of the Gegauf application to Singer, with a license back to Gegauf. These he took with him to the conference (Stanford, R. 514). They discussed an assignment of Gegauf's patent application to Singer and a license back to Gegauf. Gegauf, however, was unwilling to make an assignment for less than $250,000—many times more than Singer would consider paying. Singer ended the negotiations and nothing was reserved for discussion with Gegauf at a later time (Op., R. 1686; Stip. Par. 70, R. 46; Stanford, R. 514-15).

With reference to this conference the Government makes an incorrect statement. It asserts that following this conference "negotiations were suspended for a year, then resumed in September 1957" (Govt. Br. 35). The Government so states notwithstanding that in its Statement of Facts it sets forth that negotiations "ended" because Gegauf refused to sell for less than $250,000 (Govt. Br. 16) and that the trial court found (R. 1686) and the Stipulation of Facts states that Singer "ended" the negotiations (Stip. Par. 70, R. 46).

E. A year intervenes.

During the interval from September 23, 1956 to September 12, 1957, *a period of approximately one full year,* nothing whatever was done by Singer towards securing the Gegauf application (Op., R. 1686). There was no communication in any form, written or oral, between Singer and Gegauf with reference to any possible purchase by Singer of the Gegauf application (Op., R. 1686; Stanford, R. 517). Nor was there, during this period of one year, or at any time thereafter, any communication, written or oral, between Singer and Vigorelli or between Singer and Majnoni with reference to a possible purchase by Singer of the Gegauf United States application (Stanford, R. 513, 517; Op., R. 1694-95).

During this interval Singer, on March 15, 1957, abandoned the interference which had been set up between Singer's Harris reissue claim and the Gegauf claim (Stip. Par. 71, R. 47), *the Gegauf claim having been taken verbatim from Singer's Harris reissue claim* (Stip. Par. 28, R. 33; Dx. 136, R. 1539) and Singer realizing that it could not overcome the Gegauf priority date (Stanford, R. 517; Stip. Par. 69, R. 46; Govt. Br. 50).

F. One year after its previous attempt, Singer, concealing its purpose, seeks new conference for purpose of again trying to purchase Gegauf patent application, September 1957.

In September 1957, one year after the previous conference with Gegauf, Singer was notified by the Patent Office that its Harris reissue application (then containing claims wholly subservient to Gegauf's claim) was about to issue as a patent. It presumed that Gegauf's patent would also soon issue (Op., R. 1686-87; Gx. 44, R. 1090). On September 9, 1957, Stanford proposed to Waterman that Gegauf be approached again, expressing the feeling that Singer had "nothing to lose and much to gain" by "again" seeking to obtain the rights in the Gegauf United States application (Stip. Par. 72, R. 47).

On September 12, 1957, Waterman wrote to Gegauf advising that Singer had been notified by the United States Patent Office that Singer's Harris reissue application was about to be issued as a patent and that Singer presumed, therefore, that in a short time a patent would be granted upon Gegauf's application. He stated that "a proper enforcement of these patents" might make it necessary to instigate patent suits against "each of the importers" of infringing machines, of whom "there perhaps will be many" and that he thought that Gegauf would agree that "neither of us alone can protect himself most effectively" (Gx. 44, R. 1090-91). This letter was written under the pretense that Singer sought a conference to discuss enforcement of the patents, "when issued", as Singer did not want Gegauf to know at this time that in fact its objective was to try again to purchase Gegauf's application (Stanford, R. 518; Gx. 43, 44, R. 1088-91). In the letter Singer referred to enforcement of the two patents

"against infringing manufacturers who primarily are manufacturers in other countries * * *" (Gx. 44, R. 1090) and not to enforcement against Japanese infringers or Japanese infringing machines. Waterman stated that he was planning to be in Europe within the next few weeks and that it might be in Singer's and Gegauf's "mutual interest" to resume conversations while he was abroad (Gx. 44, R. 1091).

Gegauf in his reply of September 17, 1957 advised that he was looking forward to Waterman's visit for a discussion regarding "the mutual enforcement of our U. S. application No. 358,377 and the Harris reissue against infringing products of the foreign manufacturers" (Op., R. 1687; Gx. 45, R. 1092).

Arrangements were made for a conference with Gegauf. Stanford, on September 23, 1957, prepared and he and Waterman took to this conference two forms of assignment, one form calling for a lump sum payment and the other calling for annual payments (Op., R. 1687; Dx. 36 (S-8), R. 1422-24; Dx. 37 (S-9) (unprinted), Tr. 5250-53; Stip. Par. 74, R. 47). Stanford advised Waterman that the first form of agreement had the advantage that it gave Singer "irrevocable title" to the application and, furthermore, that under this agreement "it would not be incumbent upon Singer to deal any further with Gegauf in connection with this general subject" (Op., R. 1687; Gx. 47, R. 1093; Stip. Par. 74, R. 47; Stanford, R. 521-23).

G. Singer believes agreement with Gegauf reached at price of $40,000, October 1957.

Waterman and Stanford went to Europe and met with the Gegauf people, including Gegauf, Sr. and Gegauf, Jr., in Zurich on October 16, 1957. There was discussed at that meeting an assignment which would give Singer "com-

plete ownership" of the patent and in return license Gegauf to build and sell its machines (Op., R. 1687; Gx. 49, R. 1095; Stip. Par. 76, R. 48). Singer endeavored to give the impression that "the subject was not overly important" to Singer. Waterman reported that the price agreed upon for the "outright purchase" of Gegauf's application, with all of its divisions, was reached only after considerable discussion and that it was $40,000 (Op., R. 1687; Stip. Par. 76, R. 48; Gx. 49, R. 1095; Stanford, R. 523-24). Singer expected that an agreement, "if not already reached", would be finally settled shortly. Gegauf's attorney and Singer's Swiss patent attorney, Kirker, who had not been present at the meeting, were to get together to finalize the terms of the agreement in accordance with the discussion (Op., R. 1687; Stip. Par. 76, R. 48; Gx. 49 R. 1095-96; Stanford, R. 523-24).

H. Gegauf makes new demands, October 1957.

Gegauf, however, was not as near to an agreement as Singer had believed. Shortly after the conference, Gegauf, through his attorney, raised three points with Kirker: Gegauf wanted $125,000, wanted the agreement to provide that Singer be required to obtain Gegauf's consent before it brought a legal action against a European company on a patent issuing on the application, and had prepared but had not filed a divisional application, covering a part of the subject matter of the original application, and did not want to transfer such divisional application (Op., R. 1687-88; Stip. Par. 77, R. 48-49; Gx. 50, R. 1096-97; Gx. 52, R. 1098-1100).

Kirker, by letter of the 25th, reported Gegauf's demands to Stanford and stated his belief that Gegauf, with respect to the second of the above mentioned points, had in mind

three companies, namely, Necchi, Pfaff and Vigorelli (Stip. Par. 77, R. 49; Gx. 52, R. 1099) and that the conversation with Gegauf's attorney had left him under the impression that an agreement might be obtained *on the basis of approximately half the sum mentioned*, that Gegauf considered Singer's proposal of $40,000 as a minimum subject to discussion and Gegauf's counter-proposal of $125,000 as a maximum also subject to discussion (Stip. Par. 77, R. 49).

Stanford by letter of October 30, 1957 replied to Kirker's letter, giving Kirker express instructions that (1) Singer had negotiated for and wanted the entire application; (2) Singer would agree to permit Necchi, Pfaff and Vigorelli to sell their machines in the United States; and (3) Singer would be willing to pay $62,500, and authorized Kirker to go as high as $75,000. He advised Kirker to contact Gegauf's attorney and make known to him Singer's position (Op.; R. 1689; Stip. Par. 78, R. 49-50).

1. Gegauf's position hardens, November 1957.

On November 15, 1957 Kirker, as requested by Stanford, had an interview with Gegauf, Gegauf, Jr. and their patent attorney. This interview revealed that the position of Gegauf had, as stated by Kirker, "considerably hardened", since Stanford's visit of a month before (Op., R. 1689; Gx. 56, R. 1104-06). Gegauf explained that while he "had no objection to making an assignment of [his] application by means of [illegible] Singer could stop as far as possible Japanese competitors in the United States market", he would do so only upon the conditions he set forth (Govt. Br. 17; Stip. Par. 79, R. 50). Gegauf indeed set forth plainly and forcibly that if he was going to give Singer the means by which Singer could stop

Japanese infringing machines it would be done on Gegauf's terms. He made it clear in that conference that he conceived his interests to be different from those of Singer, and that while he was giving to Singer "the possibility to stop" Japanese infringing machines in the United States, there was a serious drawback for Gegauf in that if sale of such infringing machines in the United States were terminated, endeavors would be made to sell them in Europe (Gx. 56, R. 1107; Op., R. 1690).

Gegauf's main interest was in Europe. According to Gegauf's statements to Stanford: the Gegauf factory in Switzerland produced 70,000 to 80,000 sewing machines per year, of which only about 4,500 were straight stitch machines, his major efforts being devoted to multiple cam machines; and Gegauf did not wish to increase production, as Gegauf was getting the maximum number of machines off his existing tools and did not wish to expand any further, Gegauf expressing his opinion that small sewing machine companies get into difficulties by over-expanding and permitting their inventories to become too great (Gx. 62, R. 1122). *Gegauf's total exports of multiple cam sewing machines to the United States in the year 1957 were only 1,600 machines* (Stip. Par. 121, R. 64).

The conditions that Gegauf set down for the assignment to Singer were: first, Singer would have to make a clear undertaking not to manufacture a machine which was a copy of the Gegauf machine; second, that Gegauf should have the right to grant a license to "one European company" out of a list of European companies; and, third, that Gegauf would receive the sum of $125,000 (Stip. Par. 79, R. 50; Op., R. 1689-90).

Gegauf asked Kirker what sum Singer was willing to offer and stated that he was not prepared to start bargain-

ing and that he would not agree to a sum nearer to Singer's $40,000 offer than to his figure of $125,000. This came as a surprise to Kirker as he believed that Gegauf would reduce his figure considerably. Kirker told Gegauf that he could go no further with the discussion since his instructions from Singer contained a maximum which was nearer to Singer's figure of $40,000 than to Gegauf's figure of $125,000 and stated that he would ask Singer for specific instructions concerning the sum to be offered (Op., R. 1690; Stip. Par. 79, R. 50-51; Gx. 56, R. 1106-07).

Kirker reported to Stanford on the foregoing interview with Gegauf and advised that it looked as if an agreement might be reached by offering $80,000 to $90,000 but that Singer might have to go up to $100,000 (Stip. Par. 79, R. 51).

J. Stanford prepares to go to Europe to obtain the means to bar all imports of machines infringing Gegauf Patent No. 1, November 1957.

Upon receiving from Kirker the advice concerning his interview with Gegauf, Singer decided that Stanford should go to Europe and attempt to conclude the agreement. Purposes, considerations and policies for Stanford's guidance were formulated and set forth in a memorandum by Milton C. Lightner, the then President of Singer (Stip. Par. 80, R. 51-54). Lightner's memorandum asserted that the main purpose of Stanford's trip was to put Singer in a position "to own and control" the Gegauf application in order "to bar import or U. S. production" of infringing mechanisms (Stip. Par. 80, R. 51).

Here was the clearest of statements that Singer's purpose was to stop all machines infringing Gegauf Patent No. 1 *whatever the source thereof—Japan, Europe or the United*

States. When the Government was urging that Singer unilaterally attempted to monopolize, it literally rang the welkin with this statement of Lightner's. For instance, in its Jurisdictional Statement, where it still was arguing the attempt to monopolize charge, the Government said: "The undisputed facts found by the district court (see the statement, *supra,* pp. 6-10, 12, 13) compel the conclusion that Singer specifically intended not only to exclude Japanese competitors from the United States market in multi-cam machines, but also to eliminate all other competitors and monopolize that market", and added: "Singer's own words were that 'it wanted to get the very best patents' to bar imports or United States production of mechanisms which would violate these patents" (J.S. 20).

K. Stanford goes to Europe to there arrange a conference with Gegauf and negotiates with Gegauf. Gegauf assignment made for $90,000, December 4-5, 1957.

Stanford met Kirker in Geneva, preparatory to arranging a conference with Gegauf (Gx. 62, R. 1115; Stip. Par. 81, R. 54), and called Willie, Gegauf's patent attorney, in Zurich, and requested a conference with Gegauf (Gx. 62, R. 1115). Willie reported Gegauf was ill (this turned out to be a pretext of illness) and would not be able to see them in Zurich but would see them in Steckborn, 50 miles from Zurich on December 4, 1957 (Op., R. 1691; Gx. 62, R. 1115-16). They attempted to induce Willie to travel with them from Zurich to Steckborn but, "probably anticipating such a request", he informed them that he could not go with them (Gx. 62, R. 1115-16).

At the conference of December 4, 1957:

(a) Although most anxious to conclude the assignment, Stanford took the offensive and referred to Gegauf's

previous statement to Kirker that if importation into the United States of infringing Japanese machines were stopped the effect would be that such machines might be sent into Europe because Gegauf did not have patent protection in Europe. Stanford asked several questions directed to the searching out of information as to whether Gegauf knew of any patents which might affect the validity of the patents that Gegauf had. He was informed by Gegauf that Gegauf "knew of no additional reference publication or prior patents which would have any effect" upon Gegauf's patents (Op., R. 1691; Gx. 62, R. 1116-17).

(b). Gegauf, Jr., expressed the feeling to Stanford that there might be a disadvantage to Gegauf in conveying its United States patent to Singer, because it would divert Japanese infringing machines to Europe. Stanford replied that if they flooded the United States market with *infringing machines* they would become strong by high production and would enter the European market in an even stronger position. Stanford further replied that it seemed that a greater risk would be involved for Gegauf if Gegauf did not permit Singer to try to reduce the importation into the United States of machines *infringing* such patent (Op., R. 1691; Gx. 62, R. 1118-19).

(c) Gegauf asked that the agreement provide that Singer would assist Gegauf in actions brought under his patents against his competitors in Europe. Singer rejected this proposal (Op., R. 1691; Gx. 62, R. 1119).

(d) Stanford pointed out to Gegauf that the Brother Pacesetter machine was a free-arm zigzag machine, that Singer did not have a comparable free-arm machine to sell and that consequently the Brother Japanese machine was in direct competition with Bernina and not with

Singer. Gegauf, *who had sold a total of only 1,600 machines in the United States during 1957*, was not impressed with any prospect of increased sales by him of his machines. He offered the Gegauf application to Singer "free of charge" if Singer would agree for the next five years to sell 10,000 of Gegauf's free-arm machines a year. Stanford attempted to stall off this suggestion by expressing doubt that Singer would be willing to sell someone else's machines in its shops and asserted that Singer certainly would not consider it if it were not exclusive. The response came with alacrity that Gegauf was thinking of changing agents in the United States. Stanford thereupon brought the conversation back to his objective (Op., R. 1692; Gx. 62, R. 1120).

(e) When the matter of price was discussed, Gegauf insisted that Singer make an offer. After considerable thought, Stanford offered 300,000 Swiss francs, the equivalent of $75,000, "but has a larger sound", for an assignment of the original and divisional applications. Gegauf replied that such offer was not close enough to his figure of $125,000. Singer, after considerable discussion, brought him down to $100,000 (Op., R. 1691-92; Gx. 62, R. 1119). Negotiations continued and finally Stanford made an offer of $90,000 which Gegauf accepted (Op., R. 1692; Gx. 62, R. 1121).

The negotiations lasted for two days and included a dinner attended by all participants. In the entire period there was not a single mention of any Singer owned United States patent or patent application, or of the enforcement or use of any such patent, alone or in conjunction with a Gegauf patent or any other patent (Gx. 62, R. 1114-23).

L. Provisions of the Gegauf-Singer assignment agreement.

The agreement assigning the Gegauf patent application and the divisional application was drafted by the Singer representatives and executed the next day. (Op., R. 1692; Gx. 62, R. 1121). Under such agreement, Singer (1) agreed to pay Gegauf the sum of $90,000, (2) granted Gegauf a non-exclusive and royalty-free license to sell in the United States sewing machines of the type disclosed in the assigned patent applications *and made in Gegauf's own factory in Switzerland*, (3) agreed that Singer would not without Gegauf's consent introduce legal proceedings on the basis of patents issued under said applications *against Pfaff in Germany with respect to sewing machines manufactured in Pfaff's factory in Kaiserslautern, Germany*, or *against Vigorelli in Italy with respect to sewing machines manufactured in Vigorelli's factory in Italy*,[7] and (4) agreed not to manufacture or sell in the United States or elsewhere a sewing machine the construction of which would be a slavish copy of Gegauf's sewing machine taken as a whole, which machine was shown on the schedule attached to the Gegauf-Singer cross-license agreement, or of the feeler and multiple cam mechanism contained in such Gegauf sewing machine. Gegauf agreed to assist Singer, at Singer's expense, in procuring "valid" patents based on the applications (Op., R. 1692-93; Gx. 58 (S-10), R. 1108-10).

[7] Both Gegauf and Singer had already licensed Vigorelli under their respective patents and, as stated by the trial court, this provision restricted Singer's freedom to enforce the Gegauf patents only with respect to Pfaff (Op., R. 1713). By agreement dated July 22, 1959 this agreement was amended by deleting therefrom the provision with respect to Pfaff (Op., R. 1710; Gx. 139, R. 1204-05).

M. The written agreement constituted the entire agreement and understanding of the parties.

Upon the execution of the assignment, Singer understood and believed that it became, and it did become, the complete owner of the applications, free to use such applications, and any patent issued thereon, as Singer might see fit, limited by no obligations to Gegauf other than as expressed in the written cross-license agreement with Gegauf and the written assignment agreement with Gegauf (Stanford, R. 529-31).

The trial court twice made findings to the effect that there was no agreement between Singer and Gegauf outside of the written agreement. It expressly found that there was no understanding or commitment with respect to the enforcement of any patent then owned or subsequently acquired, either alone or in conjunction with any other patent, by infringement action or otherwise, or that either would restrict licenses to others. The trial court stated (Op., R. 1693):

> "With the exception of these specific limitations on Singer's right to assert the Gegauf patent when issued, no agreement was made or understanding reached by the parties with respect to the licensing, enforcing or use of their patents. These writings were the entire agreement of the parties."

Again, at page 1714, the court found:

> "Aside from this [a limitation in the agreement on the right to assert the Gegauf patent] there was no other understanding or agreement with respect to licensing or enforcing by infringement action or otherwise, any patent, then owned or subsequently acquired, or with respect to the use in any way of any such patent, alone or in conjunction with any

other patent. The written agreement expressed the complete agreement and understanding of the parties and we conclude that it contained nothing illegal."

N. Singer's purpose in acquiring Gegauf Patent No. 1 was to become the complete owner thereof in order to protect its 401 machine in such manner as best served Singer's interest.

Singer, immediately after it had entered into the cross-license agreement with Gegauf in April 1956, started directing its attention to the possible acquisition of Gegauf's patent covering a stack of cams and a single cam follower. Singer felt that it could enforce the patent better than Gegauf could. It felt that it was at the mercy of a foreign patent owner and that its needs could be satisfied only by independent ownership of the patent. As stated by the trial court,

> "As a nonexclusive licensee of a United States patent owned by a foreign manufacturer who had neither committed himself nor authorized Singer to protect the patent from infringement and whose principal interest lay in Europe, Singer in the United States felt at the mercy of infringers. Singer thus realized the need for independent ownership of the patent." (Op., R. 1695)

In approaching and in bargaining with Gegauf with respect to the assignment of Gegauf's application, Singer at all times was dealing at arm's length, solely in its own interest and with the intent of becoming the unrestricted owner of the Gegauf patent. The trial court found that the assignment agreement resulted "from a fixed determination on each one's part to give and pay for nothing more than was absolutely necessary to secure

its respective ends and to carry on the protracted negotiations as distantly as possible" (Op., R. 1694). At another point the trial court referred to "further evidence of the arm's length dealing which had characterized all Singer's dealings with Gegauf" (Op., R. 1709).

Singer wished to acquire and acquired Gegauf Patent No. 1, which squarely covered its 401 machine (Op., R. 1660; Stip. Par. 93, R. 58), in order to control such patent and be in a position to protect the manufacture and sale of such machine by enforcing the patent against unlicensed infringers, whatever the country of origin, and always, and in every instance, in such manner, and only in such manner, as served Singer's interest. The trial court found: "Singer's sole interest was to protect its '401' machine against all infringing machines. [Citation] This extended not only to machines originating in Japan but everywhere, including Europe." (Op., R. 1698)

V.

SINGER ATTEMPTS TO ENFORCE GEGAUF PATENT NO. 1 FOR THE PROTECTION OF ITS 401 MACHINE

A. Singer commences a proceeding before the United States Tariff Commission to protect its 401 machine by obtaining an order excluding all unlicensed machines infringing Gegauf Patent No. 1.

On January 15, 1959 Singer filed a complaint before the United States Tariff Commission praying that the Commission recommend to the President that household automatic zigzag sewing machines covered by the claims of Gegauf Patent No. 1 be excluded from entry into the United States for the term of such patent (Op., R. 1707; Stip. Par. 82(4), R. 55; Ex. S-11, R. 1616). This led to the Tariff Commission investigation, No. 17, in which the

taking of testimony was completed, but which was stayed by the Tariff Commission when this suit was brought by the Government and is being held in abeyance awaiting the outcome of this suit (Op., R. 1707; Stip. Par. 82(4), R. 55; Dx. 54(unprinted), Tr. 5283).

Singer's complaint to the Tariff Commission was filed more than one year after the Gegauf assignment to Singer and more than eight months after the issuance of Gegauf Patent No. 1. At the commencement of the trial the Government said to the trial court, "We will also undertake to show that one facet or idea of the conspiracy was that Gegauf would assign his applications to Singer so that Singer then, having ownership of it, could use it before the United States Tariff Commission . . ." (R. 86). The Government, while now admitting that "there is no evidence that the parties discussed" the advantages of a Tariff Commission proceeding "prior to the transfer of the Gegauf patent", attempts *by implication* to create an impression just to the contrary (Govt. Br. 38). It asserts that "*although*" there is no evidence that the parties discussed the "advantages" of the Tariff Commission proceeding, "the Tariff Commission proceedings demonstrate the exceptional benefits to Singer and Gegauf" which resulted from transferring Gegauf's patent to Singer and refers to the fact that only an American manufacturer could bring such an action (Govt. Br. 38). It then promotes the implication of prior discussion by use of the words "at least" in its statement that "the joint benefits" must have become apparent "at least" while the proceeding was in progress (Govt. Br. 38). At no time prior to the Singer-Gegauf assignment agreement was any mention made by Singer to Gegauf or Vigorelli of the possibility of bring-

ing a proceeding before the Tariff Commission (Op., R. 1707; Stanford, R. 530). There not only was no discussion between the parties with respect to such possibility, but Stanford did not have any knowledge of or give any recognition to the fact that a Tariff Commission proceeding could be brought in connection with the assignment (Stanford, R. 530) and testimony of both Stanford and Brumbaugh, outside patent counsel to Singer, shows when the Tariff Commission proceeding was in fact first conceived (Stanford, R. 531, 575-77, 578; Brumbaugh, R. 579-80). With respect to the filing of the Tariff Commission proceeding and the absence of any discussions with respect thereto during any of Singer's negotiations with Gegauf or Vigorelli, the trial court found:

> "This filing with the Tariff Commission was after the acquisition of the Gegauf patent. It was followed and was the result of a discussion which Singer had with its patent counsel and with an attorney expert in tariff matters, concerning the inadequacy of infringement suits to protect its '401' machine. Before the filing, Singer did not consult with Gegauf or Vigorelli about taking this step. There is no evidence that Singer ever discussed such a step with either Gegauf or Vigorelli during any of its negotiations with them." (Op., R. 1707)

Singer first gave consideration to the possibility of bringing a proceeding before the Tariff Commission in May 1958, more than five months after execution of the Gegauf assignment (Stanford, R. 531, 575-76). The idea of bringing such an action originated during a discussion between Singer and its outside patent counsel in New York concerning the difficulties of enforcing Gegauf Patent No. 1 and their belief that infringement suits did not provide a

remedy adequate to protect the Singer 401 machine (Op., R. 1707; Stanford, R. 576-77, 578; Brumbaugh, R. 579-80). Singer thereupon decided to explore the possibility of bringing a proceeding before the Tariff Commission (Stanford, R. 576-77; Brumbaugh, R. 580).

Singer was faced with the situation that all manufacturers of machines infringing such patent were located outside the United States, that there was a large number of importers and distributors of such infringing machines, and that a court order prohibiting an importer or distributor from dealing in an infringing machine would not prevent a different importer or distributor from dealing in the same machine (Dx. 45, R. 1434; Ex. S-11, R. 1596, 1597, 1615). Singer instituted the Tariff Commission proceeding believing that these factors rendered the remedy of civil infringement suits inadequate to prevent infringements of Gegauf Patent No. 1 (Dx. 45, R. 1434; Ex. S-11, R. 1597, 1615-16).

Singer considered that the selling of sewing machines infringing Gegauf Patent No. 1 constituted unfair methods of competition and that such unfair methods of competition had the effect or tendency "to destroy or substantially injure an industry, efficiently and economically operated, in the United States" (19 U.S.C. §1337) and it so alleged in the Tariff Commission complaint (Ex. S-11, R. 1596, 1597, 1603, 1606-07, 1615).

The trial court found that the Tariff Commission proceeding was "brought by Singer in a bona fide attempt to obtain protection for its '401' machine," which Singer was manufacturing and selling in great volume, "by an order excluding *all* unlicensed machines which infringed" Gegauf Patent No. 1 (Op., R. 1710 (emphasis is the trial court's); Op., R. 1707; Stanford, R. 531-32) and that "Singer had every right to resort to the Commission" (Op., R. 1710-11).

B. Singer institutes infringement actions to enforce Gegauf Patent No. 1 and attempts to obtain prompt adjudication of the validity of such patent.

Once again the Government seeks to imply what it is not prepared to state. The Government asserts that "there is authority[20] that in such [Tariff Commission] proceedings the validity of the Gegauf patent (which Singer had earlier agreed not to question before the Patent Office) is not subject to challenge by the excluded parties" (Govt. Br. 38; footnote omitted). It thus implies that Gegauf Patent No. 1 contained claims broader than were legally permissible, although it concedes the validity of such patent (Stip. Par. 93, R. 58), and implies that Singer was unwilling to subject such claims to a challenge of invalidity. The Government's first implication, challenging by innuendo its own concession, is dealt with at pages 78-83, *infra*. Its implication that Singer sought to avoid a test of the validity of the patent which the Government does not question, is flatly contradicted by the evidence and the findings of the trial court. Promptly upon the issue of Gegauf Patent No. 1, Singer sued Brother International Corporation, one of the largest importers and distributors of infringing Japanese-made machines and a subsidiary and sole distributor for Nippon, one of the largest Japanese manufacturers in Japan (Dx. 45, R. 1434; Stip. Pars. 82(1), 98, R. 54, 60-61). Brother, though pleading invalidity of Gegauf Patent No. 1, was not in a hurry to have the issue decided and it is still undecided because Brother, not Singer, sought a stay of proceedings (Op., R. 1711; Gx. 146 (unprinted), Tr. 3767-69, 3771-75, 3778; Dx. 124, R. 1525).

Singer commenced an infringement action against Sewing Machine Exchange on September 10, 1958 in the United States District Court for the Western District of South Carolina *for the specific purpose of obtaining an early adjudication of the validity of the claims of Gegauf Patent No. 1* (Dx. 45, R. 1434). When Sewing Machine Exchange was unwilling to defend the suit against it, Singer endeavored to induce the attorneys for Sewing Machine Exchange to contact Standard Sewing Equipment Corp., the importer and distributor of the machines involved in the suit, with the request that Standard take over the defense of the suit (Dx. 43, R. 1430; Dx. 44, R. 1432). Standard did not take over the defense of the suit whereupon Stanford reported that "unfortunately" neither Sewing Machine Exchange nor Standard would defend the suit and that "Singer had to be content with a consent decree" (Dx. 44, R. 1432; Dx. 45, R. 1434; see also Op., R. 1711; Stip. Par. 82(2), R. 54). The consent decree in the Sewing Machine Exchange action was filed on November 26, 1958 (Gx. 148 (unprinted), R. 3786). One week later Singer filed an infringement suit against ACO Appliance Distributing Company in the United States District Court for the Eastern District of South Carolina, again seeking an early adjudication of the validity of Gegauf Patent No. 1 (Dx. 44, R. 1432; see also Op., R. 1711; Stip. Par. 82(3), R. 54-55). With respect to this action, Stanford reported, "We hope that either ACO or its supplier Fleetwood Industries, Inc. will defend the present infringement suit" (Dx. 44, R. 1432). The action against ACO, however, was also terminated by a consent judgment (Op., R. 1711; Gx. 152 (unprinted), R. 3798-3800).

The trial court expressly found that Singer's effort to obtain an adjudication of validity "belies any intent on

its part to acquire broad patent protection regardless of validity" (Op., R. 1711).

C. Singer's enforcement efforts have been directed to the prevention of the sale of machines infringing Gegauf Patent No. 1.

Without exception, each infringement action brought by Singer and the Tariff Commission proceeding were brought with respect to sewing machines that infringed Gegauf Patent No. 1. Except in conjunction with an attempt by Singer to enforce Gegauf Patent No. 1, Singer has not brought any action, commenced any proceeding, or made any attempt to enforce the Harris reissue patent or the Johnson patent (Stip. Par. 84(2), R. 55). Singer has not brought any action, commenced any proceeding or made any attempt to enforce Gegauf Patent No. 2 or the Perla patent by suit, notice or threat of suit (Stip. Par. 85, R. 55). Thus, at all times since the issuance of Gegauf Patent No. 1, Singer's efforts have been directed to preventing the sale of machines infringing Gegauf Patent No. 1.

Summary of Argument

I.

The Government contended in the trial court that the *first* sentence of Clause 1 of the Singer-Gegauf cross-license agreement, prohibiting actions by either party to restrict the scope of the claims of the other, was illegal. In its argument before the trial court the Government specifically advised the court that the "*only phase*" of the cross-license agreement that was illegal were the restrictions imposed by the first sentence of Clause 1. The trial

court found that the *first* sentence applied to foreign countries having opposition, nullity and invalidation proceedings to restrict the scope of claims. The Government now contends, for the first time, that the second sentence *also* prohibits either party from restricting the claims of the other and is illegal, and asks this Court to reverse the trial court for not finding such sentence illegal, notwithstanding its advice to the trial court that it made no such contention.

The second sentence does not provide, as the Government contends, that the parties shall not oppose or restrict the claims of the other and contains only the *affirmative* obligation *to facilitate* the allowance of claims. The only obligation not to oppose is the normal obligation of every contracting party, arising as a matter of law, not to interfere with or make impossible the carrying out of such party's contractual obligations. The obligation contained in this sentence to facilitate the allowance of claims as broad as possible, in accordance with the laws and regulations of the Patent Office concerned, encompasses no obligation to facilitate the allowance of illegal claims. Accordingly, there is no legally imposed correlative duty not to oppose illegally broad claims.

An obligation to facilitate the allowance of claims as broad as possible, even if not accompanied by the "in accordance with the laws" phrase, is clearly susceptible to the interpretation that it means claims as broad as possible commensurate with the prior art and the applicable law. If the provision were not clear as to its intent, it, as a matter of law, would be construed as having a legal intent rather than an illegal one, unless such construction were rendered unlikely by the surrounding facts and circumstances. The evidence is simply overwhelming that there was no desire or intent to obtain

broad patent protection regardless of the validity of the claims (*infra*, pp. 76-78). The trial court specifically found that Singer's institution of infringement suits placing squarely in issue the validity of the Gegauf patent "belies any intent on its part to acquire broad patent protection regardless of validity" (Op., R. 1711).

At the time of the execution of the cross-license agreement Singer and Gegauf had a common claim in their respective applications. Singer's patent department had drawn the claim contained in its Harris reissue patent and this very claim had been suggested, word for word, for interference to Gegauf by the Patent Office Examiner —a suggestion that requires an initial determination of legality. Singer's patent department felt and still feels that the claim was valid. The Patent Office had informally advised Singer that the claim was allowable. Gegauf had accepted the claim in interference and Singer felt sure that the claim would be awarded to Gegauf as filed (*infra*, pp. 78-79). The Government has itself conceded the validity of Gegauf Patent No. 1, the patent that issued upon the Gegauf application (Stip. Par. 93, R. 58; R. 86; Op., R. 1712). The *impression* that the Government attempts to create, that the claims of Gegauf Patent No. 1 could have been restricted, is squarely in the face of the facts and of its own Stipulation of Facts that such patent is valid.

The fact that the plain intent of the second sentence was to provide for the settlement of the contemplated United States interference proceeding and that, under such proceeding, whichever party was entitled to the claim would receive the claim, does not show that the parties "obligated themselves not to oppose" illegally broad claims

of the other (see Govt. Br. 50-51). Such conclusion from such premise is a plain *non sequitur*.

The provisions of Clause 1, intended to provide against litigation, were wholly incidental to the purpose of the agreement, which was to obtain a license vital to Singer's interest. The facts clearly establish that Singer's sole purpose in the negotiations was the obtaining of the cross-licensing provisions, and the trial court found that these provisions were the essence of the agreement and were so considered by the parties. There is not an iota of evidence that during bargaining negotiations any attention whatever was paid to the provisions of Clause 1, relating to the elimination of litigation. There is no evidence that they were as much as mentioned. The sinister objectives imagined by the Government did not exist, and that is established clearly by the evidence and by the trial court's findings.

II.

The trial court found that Singer's motive in requesting deletion from the Gegauf-Singer assignment agreement of a provision permitting Gegauf to sublicense Pfaff was to give Singer a better chance of prevailing before the Tariff Commission. The trial court did not find, as the Government asserts, that it was *Gegauf's* motive for agreeing to the amendment. Gegauf's consent, ultimately given, was no eager act of cooperation. Gegauf would make no amendment until it obtained from Singer indemnification from a liability unrelated to the amendment requested. The Government's argument that Gegauf cooperated with Singer to exclude "Japanese competitors"

through the Tariff Commission proceeding is wholly inconsistent with the facts that Singer declared, Gegauf knew, the Government admits, and the trial court found, that the Tariff Commission proceeding was brought to prevent the importation of *all* machines infringing Gegauf Patent No. 1 irrespective of the source of such machines. The whole episode, as the trial court found, was "further evidence of the arm's length dealing which had characterized all Singer's dealings with Gegauf" (Op., R. 1709).

III.

There is no issue in this case of an illegal aggregation of Gegauf Patent No. 1 and the Harris reissue patent. The Harris reissue patent is completely subservient to Gegauf Patent No. 1 and the Government so conceded in open court. Not a single sewing machine can be excluded by the Harris reissue patent that is not excludable by Gegauf Patent No. 1.

IV.

The Government has abandoned any contention that the alleged conspiracy involved the Gegauf No. 2, Johnson or Perla patents. No argument with respect to the aggregation or combination of these patents in Singer's hands is made anywhere in the Government's brief. Furthermore, the Government states that it accepts the trial court's finding as to Singer's and Gegauf's motivation in entering into each of the three contracts, and abandonment of such argument is a necessary consequence thereof since the trial court found that Singer's motive in acquiring Gegauf Patent No. 2 was to accomplish a purpose which was

wholly unrelated to enforcement of the patent. The Government has stipulated that Singer brought no action, commenced no proceeding and made no attempt to enforce such patent by suit, notice or threat of suit. Finally, the trial court found that there was no agreement or conspiracy to pool patents (Op., R. 1712). The Government does not challenge this finding either (Govt. Br. 27).

V.

Singer's acquisition of Gegauf Patent No. 1 and its enforcement of such patent against infringers was not a part of any combination or conspiracy and the trial court so found. The trial court found not only that there was no agreement or understanding of any kind outside of the three written agreements between the parties but found that there was no unity or identity of any common purpose or motive and that there was no conspiracy of any kind (Op., R. 1693, 1714). With respect to the Government's attempt to relate a provision of the Singer-Gegauf license agreement to an alleged conspiracy to pool patents, the trial court said, "The plain answer to this is that we have found that there was absolutely no agreement or conspiracy" (Op., R. 1712). It found that Singer's "sole interest" in obtaining the assignment of the patent was the protection of its 401 machine against infringers (Op., R. 1693).

The Government, while protesting that it relies solely on concerted action in the mutual interest of both, in fact relies and depends upon the existence of agreements between the parties outside of the written agreements not

to license others. It argues that restrictions upon Singer's right to license actually and for all practical purposes were as binding as an agreement (Govt. Br. 43-44), although elsewhere in its brief, while arguing another point, it states that there was no restriction upon the right to license (Govt. Br. 65).

Gegauf had no motivation for entering into a conspiracy and sold its patent rights because it received $90,000 therefor. In 1957, the year in which Gegauf, on December 5, sold his patent rights, Gegauf imported into the United States only 1,600 machines. He had no interest in expanding, and, as the trial court found, his interest was in Europe (*infra*, pp. 104-05). Singer, on the other hand, was selling its 401 machine at the rate of 150,000 machines a year (*infra*, p. 113). Gegauf did not assign its application to Singer motivated by the thought that Singer, by stopping the importation of a few multiple cam machines into the United States, could "cripple" the entire Japanese sewing machine industry to the extent that it could not compete effectively in Europe. The Government's contention to that effect is an argument of necessity, for which the Government cites no supporting evidence (Govt. Br. 48).

There was no power of coercion by Singer or Gegauf over the other and each was free to act in its own best interests. Up to the time that Gegauf made the assignment it was free to use its patent rights as it saw fit, and after Singer acquired the patent it was free to use the patent as it saw fit. Gegauf of course knew that Singer had invented and was marketing a machine under Gegauf's patent rights as licensee, that there would be infringers

of the patent when issued, the largest of which were Japanese, that Singer was paying a substantial sum of money for the patent, and that Singer frankly stated to Gegauf that the reason it wanted to purchase the patent was that Singer could enforce it better than Gegauf could (*infra*, p. 109). Neither mention of the obvious nor the conveyance or receipt of such obvious information constituted any part of a conspiracy.

There was no question of a concurrent or joint action against Japanese infringing machines. There was only one patent, and after Singer's acquisition of the patent it was completely free to act as it saw fit. Gegauf had no domination over Singer and had no capacity to affect Singer's actions. Neither hope that an item which can be used for one purpose only will be used for such purpose, nor mere reliance upon the individual self-interest of the purchaser to use such item for such purpose, constitutes a violation of the Sherman Act.

Singer's actions were not directed "against the Japanese" in the manner that the Government consistently uses; they were directed against them only in the sense that anything that is directed against the whole is directed against all its parts. The trial court expressly found that "The principal threat to the Singer machine came from the Japanese imports, not from European production, but Singer sought to bar all infringing machines" (Op., R. 1710).

The fact that Singer had no affirmative intention to license anyone at the time of its acquisition of the patent does not establish that it had an intention never to license the patent. Even if it had had a policy of not licensing, Gegauf had no right or interest in such policy and it could be changed at will by Singer in accordance with its wishes. The Government's argument that if Singer and

Gegauf operated wholly independently of each other it is just as much a violation of the law as if they had agreed upon a course of conduct (Govt. Br. 48) is wholly untenable. If the transferor of a patent having no promise or commitment whatever relies upon the purchaser's having a motive to enforce the patent in its own self-interest, that does not become a combination or conspiracy under Section 1 of the Sherman Act. *United States* v. *Parke, Davis & Co.*, 362 U. S. 29, 46-47 (1960).

VI.

The cases cited by the Government do not establish any combination or conspiracy in this case. Conspiracy requires an agreement, express or implied. It is true that a combination under the Act *can* exist without any agreement. But in combination cases not involving agreements there must be some dominating power exerted by one participant or group of participants, without legal justification, to compel the adherence by others to a desired course of action. In the instant case it is conceded that Singer and Gegauf made no agreements, express or implied, concerning the enforcement or the licensing of Gegauf Patent No. 1. It is clear that Gegauf had no power to dominate Singer with respect thereto.

VII.

The transactions between Singer and Gegauf did not result in dominance of the market or in any unreasonable restraint on competition. Those transactions must be tested in the light of the competitive market. *Report of the Attorney General's National Committee to Study the*

Antitrust Laws (1955) (p. 12); *United States* v. *Columbia Steel Co.*, 334 U. S. 495 (1948).

Singer's right to enforce its valid patent covering its 401 machine, which it invented, produced and sold, is not affected by the presence or absence of non-infringing machines in the market (*Virtue* v. *Creamery Package Mfg. Co.*, 227 U. S. 8, 33 (1913)). In fact, however, as the trial court found, the elimination of infringers would leave "as competitors all manner of sewing machines with devices capable of doing the same thing over which Singer had no control" (Op., R. 1716). Competing sewing machines include multiple cam, replaceable cam, manually operated and straight stitch sewing machines with zigzag attachments (Op., R. 1717). These findings are supported by the testimony of defendant's witnesses, exhibits in the form of competing machines and samples of the work produced by these machines, admissions of plaintiff's counsel and plaintiff's own witnesses (Appendix).

The facts show that Singer and Gegauf did not dominate the United States market and the vigor of foreign competition precluded any possibility of an unreasonable restraint by Singer's enforcement of the Gegauf patent. The undisputed evidence shows that the sewing machines covered by the Gegauf patent constituted a minimal percentage of the United States household sewing machine market in which they compete. On the other hand, the Japanese and Europeans had over 70% of such market. Even if there had been an agreement between Singer and Gegauf to enforce the Gegauf patent against infringers, such enforcement, particularly where the patent affects such a small proportion of the competition, would have constituted no unreasonable restraint of the market.

Argument

POINT I.

THE SINGER-GEGAUF CROSS-LICENSE AGREEMENT PROVIDES THAT THE PARTIES WILL NOT BRING OPPOSITION, NULLITY OR INVALIDATION PROCEEDINGS, WHERE SUCH PROCEEDINGS ARE AVAILABLE, AND THAT THEY WILL SETTLE INTERFERENCE PROCEEDINGS, WHERE SUCH PROCEEDINGS ARE AVAILABLE, IN ACCORDANCE WITH THE LAWS AND REGULATIONS OF THE PATENT OFFICE CONCERNED. SUCH PROVISIONS ARE ENTIRELY LEGAL.

The Singer-Gegauf cross-license agreement contains in Clause 1 two separate sentences. These are set up in the agreement and read as follows:

> "1) SINGER and GEGAUF each undertakes not to do anything, either directly or indirectly and in any country, the result of which might restrict the scope of the claims of the other party relating to the subject matter of the above mentioned patents and patent applications.
>
> "SINGER and GEGAUF each undertakes, in accordance with the laws and regulations of the Patent Office concerned, to facilitate the allowance in any country of claims as broad as possible, as regards the subject matter of the patents and patent applications referred to above." (Gx. 26 (S-3), R. 1067)

The Government contended before the trial court that the provisions of the *first sentence* of Clause 1 were illegal and declared to the trial court that the provisions contained therein were the "only phase" of the agreement which the Government contended was unlawful. The trial court found that the first sentence was applicable to foreign countries having opposition, nullity and invalidation proceedings and that the second sentence was applicable

to countries having interference proceedings, such as the United States (Op., R. 1681). The Government states that it is not directly challenging the trial court's finding that only the second sentence has application to the United States (Govt. Br. 52-53).*

---

* While making this statement, the Government nevertheless seeks to obtain such advantage as may be obtained by presenting a summarized, inadequate and inaccurate statement questioning the correctness of a finding which it does not challenge. It is a technique for which we have slight esteem. Notwithstanding the fact that the Government's statements with respect thereto are inaccurate and misleading, two examples of which are set forth below, we will not argue on the merits of a finding which the Government does not challenge. The very adequate reason why the Government does not make such challenge can be found by an examination of pages 34-39, inclusive, of Defendant's Motion to Affirm the judgment herein, filed October 18, 1962.

1. The Government quotes the provisions of Clause 1 in conjunction with *only* two of the four immediately preceding preambles (Govt. Br. 14-15; see also 49-50) and on the basis thereof, with *apparent* plausability, asserts that the *cross-license agreement stated* "that it [the agreement] was made '[i]n view of' the parties' 'realiz[ation] that interference proceedings are about to be opened in the USA'" (Govt. Br. 50). These are half-truths, and, like so many half-truths, they are wholly misleading. There are other preambles preceding the two quoted by the Government. When all are read together it is easily seen that the agreement was also made in view of the fact that patents and patent applications *were pending in various foreign countries*, which in turn discloses that Clause 1 was not designed *merely* "to provide for the settlement" of United States interference proceedings, as claimed by the Government (Govt. Br. 50).

2. The Government, explaining the basis for its assertion that the first sentence should have been construed as applying to the United States, cites and quotes from a Stanford memorandum to show that Stanford supported its position (Govt. Br. 52, n. 25). The memorandum does no such thing (Dx. 31, R. 1413-14), and the Government has so conceded. In its Jurisdictional Statement, the Government stated to this Court that the trial court's finding that the first sentence applied to foreign countries and not to the United States was based on Stanford's said memorandum "so interpreting the written agreement" (J. S. 11, n. 13). In the Government's Post-Trial Brief, Stanford was bitterly assailed for having recorded in his memorandum that the first sentence applied to foreign countries and not to the United States ((unprinted), Tr. 6431).

A. The Government now, for the first time, argues that the provisions of the second sentence of Clause 1 are illegal.

On this appeal, the Government, for the first time, turns to the second sentence of Clause 1. In its Complaint the Government made no allegation with respect to the provisions of Clause 1, and the Complaint in no way relates to or encompasses a conspiracy or agreement to obtain broad patent claims or to refrain from making objection to any improper claim presented in any proceeding. There is not a reference in the Complaint to the obtaining of claims that are broader than the state of the art permits, illegal, void or in any way improper (R. 4-5).

Approximately 15 months subsequent to the filing of the Complaint and approximately 1½ months prior to the commencing of the trial, the Government in its Amended Statement of Contentions, filed March 24, 1961, injected into the cause a claim that the license agreement was an unreasonable restraint on trade and was illegal *per se* because, as there stated by the Government, the agreement prevents the parties from fully exercising their rights under the patent laws and regulations in that the parties agreed "to preclude themselves from moving to dismiss interferences on the ground that the count(s) involved in the interferences was unpatentable", and "to preclude themselves from moving to amend the interferences by substituting, for a count(s) believed to be too broad," a count of narrower scope (R. 79).

On September 20, 1961 the Government filed *with and for the trial court*, a Memorandum Relative to Defendant's Proposed Findings of Fact. It there made the following statements:

> "The Government has made no contention that the cross-licensing was unlawful. • • •

"The *only phase* of the cross-licensing agreements which the Government does contend was unlawful, is the provision in the defendant-Gegauf agreement of April 14, 1956 by which the parties agreed *not to do anything directly or indirectly, in any country the result of which might restrict the scope of the patent claims of the other party.* Although *this provision* was included in a cross-licensing agreement, the Government contends that it was not ancillary thereto and that *it* is, in and of itself, in violation of the Sherman Act." (R. 1650-51, emphasis supplied)

In its Post-Trial Brief, under the heading "The Singer-Gegauf Agreement of April 14, 1956 is Unlawful in Itself and Violates Sections 1 and 2", the Government stated:

"The Singer-Gegauf agreement of April 14, 1956 contains express provisions in which the parties agreed *not to do anything which might restrict the scope of the patent claims of each other. This agreement* was designed to permit the parties to obtain the broadest patents possible and, in addition to furthering both the conspiracy and the attempt to monopolize, it is, of and in itself, unlawful and violates both Sections 1 and 2 of the Sherman Act.

"*The provision* which is unlawful reads:

"'SINGER and GEGAUF each undertakes not to do anything either directly or indirectly and in any country, the result of which might restrict the scope of the claims of the other party relating to the subject matter of the [patents and patent applications which are the subject of the agreement]' [Govt. Ex. 26, p. 2].

"*This provision,* as a matter of law, violates the Sherman Act, *infra.*" (R. 1652, emphasis supplied)

The Government now says that these two statements "standing alone, do suggest that it was challenging only the first sentence" (Govt. Br. 54). That is surely an outstanding example of the art of understatement. The Government attempts to alibi out of those statements, *made directly to and for the benefit of the trial court*, by reference to occasions on which it or the trial court referred to the Government's objection to the obtaining of claims as "broad as possible". It fails to point out that in such instances what was being discussed was broad claims resulting from failure to interpose objections pursuant to the agreement "not to do anything which might restrict the scope of the patent claims" of the other. An example of this is found in the quotation last above set forth. After specifically referring to the agreement not to do anything that might restrict the scope of the claims of the other, the Government states to the trial court that "This agreement", meaning precisely and only the specified agreement contained in the first sentence, "was designed to permit the parties to obtain the broadest patents possible." It is, we submit, the sheerest sophistry to contend that this is a claim to the trial court that the second sentence of Clause 1 is illegal, *per se* or otherwise. Sometimes one speaks too clearly to permit subsequent befuddlement and in this instance the Government's language is clear beyond its present desire. It states that "the only phase" of the cross-licensing agreements which the Government contends is unlawful is the provision not to do anything to restrict the scope of the patent claims of the other, *supra*, pp. 68-69. It states: "The provision which is unlawful reads:", and then it sets forth in full the first sentence and not a word concerning the second sentence. It ends with the statement that "This

provision, as a matter of law, violates the Sherman Act", *supra*, p. 69.

What the trial court understood, and clearly understood, is set forth by the trial court itself. It states:

> "It is the Government's contention that aside from the unlawfulness of the Singer-Gegauf agreements as part of the alleged conspiracy, the license agreement is *per se* illegal under Sections 1 and 2 of the Sherman Act, *by reason of the provision under which each party agreed not to do anything directly or indirectly to restrict the other's claims in the respective patent applications,* • • •." (Op., R. 1711, emphasis supplied)

The fact that the Government in setting forth the terms of the agreement once or twice paraphrased the provisions of the second sentence does not help it in the slightest since, in connection therewith, it never once referred to the second sentence as being illegal, instead referring to the agreement as being illegal because of the restrictions imposed by the provisions of the first sentence (Govt. Br. 54, n. 26 and the references therein contained). To the best of our memory and research of the record, not once during the proceedings in the trial court was this second sentence even as much as set forth in full in any document presented by the Government, whether in its two Statements of Contentions, Proposed Findings, Comments on Defendant's Proposed Finding, or in its various briefs. Clearly, the second sentence did not strike the Government as being fuel for its contention. Now, driven by the loss of its former contention, the Government asserts that it made an argument, all along, which seemingly it never even conceived of.

The Government's desire to raise a new contention before this Court does not justify its request that this

Court reverse the trial court for not having found unlawful the provisions of the second sentence, when the Government itself advised the trial court that the *only* provisions of the agreement which it contended were illegal were the provisions of the first sentence of Clause 1. The Government argues that it did not "abandon" its contention that the second sentence is illegal (Govt. Br. 54). This misses the point. The point is that the Government never raised the issue and, on the contrary, *specifically advised the trial court that it was not raising the issue*, stating that the only provisions it contended were illegal were the provisions of the first sentence. This it did in the last two documents it presented to the trial court, *one of which was its Post-Trial Brief.*

B. The second sentence of Clause 1 contemplates, and provides for, the allowance of lawful claims. It does not prohibit opposition to illegal claims.

The Government spends almost two pages (Govt. Br. 49-51) to establish the fact that "the plain intent" of the second sentence of Clause 1 was "to provide for the settlement" of the contemplated United States interference proceeding and that under it whichever party was entitled to the claim would receive it.[9] All of this is obvious. What there follows, however, is far from obvious; it is a complete non sequitur.

[9] The Government's discussion may be a bit confusing. Although it does not challenge the finding that the first sentence of Clause 1 (which clause the Government calls "Paragraph 1") has no application in the United States, it sets forth in full *both* the first and second sentences, and thereafter in discussing the effect, intent and purpose of the second sentence continuously refers to the provisions of "Paragraph 1", thus including both sentences. Furthermore, by omission of the words "It appears to me that" from the beginning of the quotation starting on the fourth line from the bottom of page 50, the Government alters the spirit, purpose and intent of the quoted sentence.

Based solely upon the premise that the second sentence had "the plain intent" of providing for "the settlement of an interference proceeding" in the United States, and that the party entitled to the claim would receive it, the Government declares:

> "In short, Singer and Gegauf, each in undertaking *to facilitate the allowance* of the broadest possible claims by the other, *obligated themselves not to oppose* each other in the anticipated interference proceedings before the Patent Office." (Govt. Br. 51, emphasis supplied)

This completely erroneous statement is repeated throughout Point II of the Government's brief (pp. 25, 51, 53, 57-58, 63, 67, 69) and, though unsubstantiated by anything other than the Government's own declaration, it forms the foundation of its entire argument. The theme that the parties agreed "not to oppose each other" is repeated in conjunction with almost every argument it makes. In its summary of argument it states: "* * * and the parties undertook not to oppose each other in such proceeding." Its subheading on page 63 dealing with the second sentence does not even refer to the agreement "to facilitate" but says: "The agreement between Singer and Gegauf not to challenge each other's patent applications violated the Sherman Act." This is repeated with such regularity (Govt. Br. 25, 51, 53, 57-58, 63, 67, 69) that one may be inclined to forget that what is being discussed is a clause agreeing to facilitate the allowance of claims, which does not have a single word in it relating to not restricting the scope of claims.

A mere declaration by the Government that the second sentence imposes an obligation on the parties "not to oppose" each other neither establishes nor clarifies any-

thing. The second sentence is still there for consideration and analysis. This sentence does not say anything about the parties not opposing each other. On the contrary, it calls upon the parties to facilitate—an affirmative action. The obligation to facilitate imposes no obligation "not to oppose" *other than is imposed by the legal principle that it is a violation of a contract for a contracting party to prevent or impede the carrying out of its obligations thereunder.* The question then is, what is the nature of the obligation to facilitate and at what point does the obligation to facilitate terminate? At the point at which the obligation to facilitate terminates, freedom to oppose is complete since in the absence of an obligation to facilitate there exists no correlative restraint upon opposition, such restraint being imposed only when opposition is inconsistent with the obligation to facilitate. Thus, if the obligation to facilitate claims as broad as possible encompasses no obligation to facilitate illegal claims, then there is no correlative restraint upon opposition to illegal claims.

We submit that it is not at all difficult to determine under the second sentence of Clause 1 the point at which the obligation of Singer and Gegauf to facilitate ceases and freedom to oppose exists. The second sentence is a rather simple sentence and it is not hard to parse. The parties first undertake, or in other words they agree, that they will do something. Secondly, they agree to do what they are going to do in a particular manner. That manner is, "in accordance with the laws and regulations of the Patent Office concerned." Thirdly, what they undertake to do in accordance with the laws and regulations of the Patent Office concerned is to facilitate the allowance of claims as broad as possible. This phrase includes several elements. First, the parties will facilitate. Secondly, what

they will facilitate is an allowance, and, thirdly, what they are to facilitate the allowance of are "claims as broad as possible." There is not a single element of that phrase that is not modified by the controlling requirement that it is to be carried out or accomplished "in accordance with the laws and regulations of the Patent Office concerned." Nothing is obliged to be done that is contrary to any law or regulation and accordingly there is no correlative restraint on restricting the scope of any illegal or improper claim.

The Government throughout its brief repeatedly refers to Gegauf's and Singer's desiring, arranging or obtaining the "broadest possible claims".[10] Whether it considers that there is a significant difference between that phrase and the phrase "claims as broad as possible" which appears in the second sentence, we do not know. In any event, whether the phrase "broadest possible claims" or the phrase "as broad as possible" is used, the Government we think quite obviously intends, *without saying so*, to leave the *impression* that they encompass claims beyond those commensurate with the prior art and the applicable law (Govt. Br. 70). It however never specifically sets forth a meaning or interpretation to be attributed to the words "the broadest possible claims" or the words used in the agreement, "as broad as possible" and relies alone upon the sound and fury of the words.

Upon an analysis of the meaning of these words it becomes apparent that there is not necessarily anything illegal or improper in seeking to acquire or agreeing to acquire or agreeing to facilitate the acquiring of a patent

[10] As shown at pages 26-27 hereof, there is no evidence that the obtaining of broad claims or the provisions of Clause 1 were at any time mentioned or discussed by Singer or Gegauf. Any contention as to what they desired, arranged for or obtained must be based solely upon the written provision itself.

with claims as broad as possible. An agreement, for example, to facilitate the allowance of claims as broad as possible, if meaning "as broad as possible commensurate with prior art and the applicable law" would not be illegal in any way, much less *per se*. It necessarily follows that for an agreement to facilitate the allowance of claims as broad as possible to be illegal, the words "as broad as possible" must be construed to mean "without regard to the prior art and without regard to the applicable law" and must be deemed to encompass action, without regard for truth, whether or not involving fraud, concealment, failure to disclose or other similar conduct. There is not the slightest evidence that they were so intended and, as a matter of law, in the absence of circumstances which compelled such a construction, it would not be made. It is a well-established principle of law, stated and cited frequently, that where two constructions of a written contract are possible, preference will be given to that which does not call for or result in violation of the law. *Great Northern Railway Co.* v. *Delmar Co.*, 283 U. S. 686 (1931); 3 Corbin, *Contracts* §546 (1960); 4 Williston, *Contracts* §260 (3d ed. 1961); 17 C.J.S. *Contracts* §318 (1939).

On the face of the record in this case and the findings of the trial court with respect to the motives and intents of the parties, it would, we submit, be ludierous for the Government to contend that Singer desired or endeavored to obtain an agreement under which it could obtain a claim beyond that commensurate with prior art and the applicable law by resort to fraud, concealment, failure to disclose or otherwise. That Singer had no such intent or desire is shown by the following finding of the trial court:

> "The fact that it has instituted action on the Gegauf patent, thus placing squarely in issue its validity,

as well as the validity of its other patents, belies any intent on its part to acquire broad patent protection regardless of validity." (Op. R. 1711)

Among the numerous facts relevant to the trial court's finding that there was no intent to obtain broad patent protection regardless of validity and supporting the fact that no limitation on the right to restrict the scope of illegal claims was intended or desired are the following:

1. The agreement was not made in a vacuum. It was made with reference to specific claims covering specific subject matter embodied in specific applications (Gx. 26 (S-3), R. 1066-67; Gx. 173, R. 1237-38; Gx. 175, R. 1268-69).

2. There existed at all times and was clearly evidenced a resolute determination that the interference proceeding should be conducted in accordance with the laws of the United States in such manner as would result in a valid patent, the desirability and necessity of which was repeatedly expressed in writing (Gx. 38, R. 1083; Gx. 39, R. 1084; Gx. 40, R. 1085; Gx. 41, R. 1086; Stanford, R. 502-03, 515-17).

3. The claims of the patent obtained are valid and are conceded by the Government to be valid (Op., R. 1712; Stip. Par. 93, R. 58; R. 86).

4. Singer acquired Gegauf Patent No. 1 for the purpose and with the expectation of enforcing it against infringers thereof, and it was obvious that that would include Japanese manufacturers and importers (Op., R. 1693-95), part of a powerful cartel backed by the Japanese Government (Fairman, R. 801-09, 821; Sogi, R. 886-98; Dx. 176-83 (unprinted), Tr. 5676-5742; Gx. 202 (unprinted), Tr. 5122-32).

5. Singer promptly placed the validity of such patent squarely in issue by bringing an infringement action against the largest distributor of Japanese sewing machines, the sole representative of one of the largest sewing machine manufacturers in Japan, which subsequently moved to stay proceedings therein. Singer, in addition to bringing such action, vigorously attempted to bring about a prompt judicial determination of validity of Gegauf Patent No. 1, by bringing actions in jurisdictions which permitted a prompt trial, which failed in its purpose and resulted in consent decrees because no manufacturer or distributor would undertake the defense of the actions brought by Singer. (See pages 54-56, *supra*.)

C. The provisions of the second sentence agreeing to facilitate the allowance of claims as broad as possible must be considered in the light of the surrounding circumstances.

At the time that the Singer-Gegauf cross-license agreement was executed Singer and Gegauf had a common claim in their respective United States Harris reissue and Gegauf applications. This resulted from the fact that the claim drawn by Singer and set forth in its application had been suggested, word for word, by the Patent Office Examiner to Gegauf for interference, and such suggested claim had been accepted by Gegauf (Gx. 173, R. 1237-38; Gx. 175, R. 1267-69). Before the Patent Office Examiner declares or suggests an interference an initial determination must have been made that the claim is allowable (Govt. Br. 59; 37 C.F.R. §1.203 (a) (b)).

Singer's patent department had searched the world in an endeavor to find material with which it could destroy or limit the Gegauf patent (Dx. 19, R. 1392-94; Dx. 21-26,

R. 1395-1406; Stanford, R. 485-86; see also Stip. Par. 27, 1st two sentences, R. 32; Dx. 4, R. 1370-72; Dx. 6-9, R. 1376-83; Stanford, R. 463-64). It failed to find any such material and instead found itself in serious difficulty with its 401 machine (Stanford, R. 485-86; Dx. 26, R. 1405-06). Singer's Swiss patent attorney had advised that Gegauf's Swiss patent was valid (Dx. 31, 1st paragraph, R. 1411-12; Stanford, R. 500-01). Singer's British patent attorney had advised that Vigorelli's British application was allowable (Gx. 10, R. 1032; Stanford, R. 488-89). Singer's patent department had itself drawn and inserted the suggested claim in its application (Gx. 173, R. 1237-38) and considered it and still considers it valid in all respects (Stanford, R. 588). The Patent Office Examiner had determined the claim to be allowable (Gx. 175, R. 1267-68). The Patent Office had informally advised Singer that the claim was allowable (Stip. Par. 37, R. 36; Op., R. 1678). Gegauf had accepted the claim in interference (Gx. 175, R. 1268-69) and Singer felt sure that the claim would be awarded to Gegauf as filed (Op., R. 1681).

We submit that it is simply absurd for the Government to scrape the leavings of bargaining negotiations to find threats by one of the bargaining parties that if it did not obtain a license it would destroy or limit the claim of the other (Govt. Br. 14, 33, 63), and then attempt to use such threats as proof that the parties, instead of litigating, made an agreement so as to be free to obtain the broadest possible patents to use against common competitors (Govt. Br. 33, 62). Certainly there is a point in every litigation at which a litigant is called upon to display some semblance of common sense. A person whose most important machine is subject to be foreclosed from markets throughout the world if a license is not

obtained does not ordinarily walk up to a patent application owner and potential licensor and say: "You must feel good to be in such a wonderful position with patent claims clearly valid and clearly enforceable in all the markets in which I would like to sell." On the contrary, threats of litigation in such circumstances are a dime a dozen. Singer commenced with threats of litigation with Vigorelli, commenced with threats of litigation with Gegauf, and commenced with threats of litigation with Messerschmitt. That they should be presented as establishing that Singer in entering into the agreement was motivated by a desire to preserve for itself and Gegauf the ability to obtain illegally broad claims, is beyond credence, and all the more so when urged in conjunction with an argument by the Government that the purpose of the alleged conspiracy was to get patents to use against Japanese manufacturers. When it is considered that Japanese sewing machine manufacturers are members of one of the most powerful cartels in the world, closely controlled and regulated by the Japanese Government and backed by practically unlimited financial resources (Fairman, R. 801-09, 821; Sogi, R. 886-98; Dx. 176-83 (unprinted), Tr. 5676-5742; Gx. 202 (unprinted), Tr. 5122-32), it seems ridiculous to suggest that Singer wanted or intended to obtain illegally broad patents with which to conduct its fight. Singer knew that it did not want invalid patents for any purpose, and that is why Stanford wrote to Gegauf:

> "• • • it is most important that the interference be settled properly so that the prevailing party will ultimately be awarded a valid patent" (Gx. 41, R. 1086).

The caliber of the foregoing "proof" of a Government contention suggests another bit of "proof" used by the Government. It asserts that "the patent information Singer had received from its Italian office could have been used to challenge the scope and validity of Gegauf's United States application" (Govt. Br. 62). For this statement the Government relies upon a report by Singer's representative in Italy that Vigorelli *reported* that one of the reasons that Gegauf had given to Vigorelli a royalty-free license was "The exhibition by Vigorelli of patents, • • • which apart from excluding that the general claim (multiple cams) could be sustained, also left open to discussion the specific claim (single cam follower) contained *in the two patents under discussion*" (Gx. 19, R. 1052, emphasis supplied). It is obvious we think that the "which apart from" clause is setting forth what Vigorelli *is reported to have reported* that *he said* to Gegauf.

The Government is not too well satisfied with the quality of its proof, because in setting it forth it makes one substitution and one omission. It says that Singer "learned," when Singer "heard," and it omits the statement that Singer's representative *reported that Vigorelli reported* the matters set forth (Govt. Br. 62; Gx. 19, R. 1051-52), a very substantial difference, of course. The "two patents under discussion" were not identified.

On the basis of this hearsay statement by a person wholly unqualified to pass judgment on patent matters and who in making it was defending his own and attacking Gegauf's position, the Government states that "the patent information" received "could have been used to challenge the scope and validity of Gegauf's United States application." The Government phrases this statement with great care. Although having quoted a statement the import of which was that the patents listed could have excluded "the

general claim (multiple cams)" and have "left open to discussion the specific claim (single cam follower)," the Government carefully refrains from asserting that such patents could have precluded or limited Gegauf's concept of a series of rotary cams having a single retractable cam follower shiftable relative to each other, lengthwise of the common cam axis, by means of a device mounted on the exterior of the machine, in order to select a particular cam for controlling the lateral movement of the needle or, in other words, that they could have limited in any way Gegauf Patent No. 1.

One thing is certain, the Government preferred the type of proof it here relies upon to the patents themselves. The list of patents reported to have been exhibited by Vigorelli to Gegauf was enclosed in the report. The Government not only obtained and examined the report and the list of patents before the Complaint was filed, but put the report and the list of patents in evidence (Gx. 19, R. 1050-54). The Government does not explain how, if the patents listed could have been used to challenge the scope and validity of the Gegauf patent, it accepted for all the purposes of this litigation the validity of that patent. The Government, in possession of all patents involved in this litigation, was given every opportunity in pre-trial proceedings to specify whether it contended that Gegauf Patent No. 1 was invalid, and it was under constant pressure from the defendant that it do so. The result is embodied in the Government's stipulation that it does not dispute the validity of the claims of the Gegauf patent (Stip. Par. 93, R. 58), and its statement in the record that the validity of no one of the patents involved is challenged "in and of themselves and absent this alleged conspiracy" (R. 86).

On the question of the Government's concession there is no question as to what the Government intended to concede or as to the reason for it and no amount of quibbling will alter the purpose or significance of its concession set forth in Paragraph 93 of the Stipulation of Facts. The trial court not only sat in on but supervised the drafting of the entire Paragraph 93. In its Findings, the trial court flatly stated: "the claim of Gegauf I was concededly valid" (Op., R. 1712). If there were any doubt as to what was intended one might consider the following colloquy:

> "The Court: All right. The government does not question the validity of any of these patents that issued in and of themselves and absent this alleged conspiracy, does it?
>
> "Mr. Elkins: No, it does not, your Honor" (R. 86).

There is not the slightest evidence that there was any patent which in any way interfered with or endangered Gegauf's invention. Patents upon such invention have been granted in the United States and Canada (Gx. 107, R. 1171-72), and Switzerland (Dx. 31, 1st paragraph, R. 1412; Stanford, R. 500-01) and a British patent thereon was considered allowable by British counsel (Gx. 10, R. 1032; Stanford, R. 488-89).

D. The importance of the provisions embodied in Clause 1 is artificially blown up by the Government out of all proportion to its true significance and purpose.

The provisions of the license agreement relating to interference proceedings and to opposition and nullity proceedings were wholly incidental to the purpose of the

agreement. The facts heretofore set forth (*supra*, pp. 6-29) establish beyond question that the sole purpose of Singer's negotiations was the obtaining of the cross-license provisions. Singer had an overriding necessity to obtain a license and that, the trial court found, was its sole interest (Op., R. 1683-84).

Singer and Gegauf were complete strangers, whose representatives, speaking different languages, had just met (*supra*, p. 24; Stanford, R. 499). One of them, Singer, was under dire pressure to obtain a license to keep not only the United States markets but markets in other countries from being foreclosed to it on its most important machine, *supra*, pp. 6-29. The other, Gegauf, was suspicious of Singer's intentions (*supra*, p. 25). As stated by the trial court, "If one were to describe the attitude of these alleged 'conspirators' throughout, it would have to be in terms of suspicion, wariness and self-preservation. It is most striking that, throughout, their dealings were characterized by an absence of unity or identity of any common purpose or motive" (Op., R. 1693). It was in this atmosphere and with these feelings that the parties met and negotiated. That the obtaining of the license provisions constituted the motivating force and that the license provisions constituted the purpose and substance of the agreement is obvious. The trial court so found, stating that such provisions "were the essence of the agreement and were considered so by the parties" (Op., R. 1682).

The blowing up of the provisions of Clause 1 into the magnitude which the Government attempts is in our judgment a plain distortion of their significance and importance. There is not an iota of evidence that any attention whatever was paid to these provisions during the bargaining negotiations. *There is no evidence that they were as much as mentioned.* These provisions were not even of enough

importance for the Government to give any consideration to them until months after the Complaint was filed (*supra*, p. 68), when it found that it was in dire difficulty with its charges of conspiratorial agreements among the alleged conspirators.

These provisions grew from a draft prepared by Gegauf (Stanford, R. 500; Gx. 24, R. 1064; Gx. 25 for Id., R. 1064-65; Op., R. 1680). They were not originally prepared by Stanford, as the Government would lead this Court to believe (Govt. Br. 53, n. 25) and the Government knows this well since it offered Gegauf's draft in evidence (R. 107-08; Gx. 25 for Id., R. 1064-65; (unprinted), Tr. 128-32). Gegauf's draft was taken by Stanford and subsequently rewritten by him (Stanford, R. 500) with the objective of having in substance the same provisions designed to avoid litigation which he had written into the Vigorelli license agreement and which he subsequently wrote in the Messerschmitt license agreement (Stanford, R. 486-88, 500-04; Dx. 133, R. 1535; Dx. 31, R. 1413-14). His endeavor was to do this while keeping the provisions as nearly as possible in the form furnished by Gegauf (Stanford, R. 500). Stanford's desire and purpose under the circumstances which confronted him, can be readily understood. He considered that he had succeeded in having the provisions of Clause 1 be the same in substance as the provisions of the Vigorelli license agreement (Stanford, R. 486-88, 500-04; Dx. 31, R. 1413-14). Singer repeatedly asserted that it was seeking an agreement "similar" to the Vigorelli agreement (Op., R. 1678; Stip. Par. 38, R. 37; Gx. 16, R. 1044, last paragraph; see also Stip. Par. 37, R. 37; Dx. 28, R. 1408, last paragraph; Dx. 35, R. 1422). The Government in turn has stipulated (Stip. Par. 38, R. 37; see also Stip. Par. 37, R. 37) and has repeatedly stated

that Singer desired an agreement "similar" to the Vigorelli agreement (R. 77, 82; Govt. Br. 62, see also Govt. Br. 12), which the Government lauds as clearly limiting the reach of the agreement therein contained "not to restrict the scope of competing claims" *to those countries* "which had 'opposition, nullity or invalidation proceedings' " (Govt. Br. 53, n. 25). That Stanford fulfilled his desire to rewrite the Gegauf draft to obtain in substance the same provisions as those contained in the Vigorelli agreement is, we submit, demonstrated by Defendant's Exhibit 133, R. 1535, and the trial court so held in finding that the first sentence applied to certain foreign countries and that the second sentence applied to countries with interference proceedings.

The sinister objectives imagined by the Government did not exist and that is established clearly by the evidence and by the trial court's findings.

POINT II.

THE AMENDMENT OF THE GEGAUF-SINGER ASSIGNMENT AGREEMENT CONSTITUTED NO CONSPIRACY OR ANY PART OF A CONSPIRACY BETWEEN SINGER AND GEGAUF

A. Singer requested the deletion from the Gegauf-Singer assignment agreement of the provision with respect to Pfaff in order to have a better chance of prevailing before the Tariff Commission.

The Government, citing Op., R. 1709, asserts that "Singer and Gegauf agreed to amend" the terms of the Gegauf-Singer assignment agreement "in order to give Singer 'a better chance of prevailing before the Tariff Commission' " (Govt. Br. 38-39). The fact, and the cited finding of the trial court, is that this was *Singer's* motive *for*

requesting the amendment, not that it was a motive of Gegauf in agreeing to the amendment.

In paragraph (3) of the Gegauf-Singer assignment agreement of December 5, 1957 Singer agreed not to introduce, without the consent of Gegauf, legal proceedings against Pfaff on the basis of any patent issued upon the applications assigned to Singer by Gegauf as far as sewing machines manufactured in Pfaff's factory in Kaiserslautern, Germany, were concerned (Gx. 58 (S-10), R. 1109-10).

Shortly before May 27, 1959, during the hearings before the Tariff Commission, Singer was asked by the Commissioners if Pfaff was licensed under Gegauf Patent No. 1 (Op., R. 1709; Gx. 130, R. 1193). Singer replied that Pfaff had no such license (Op., R. 1709; Gx. 130, R. 1193). It felt that its answer to the Commissioners was perhaps not too convincing in view of paragraph (3) referred to above under which Gegauf of course did have power to protect Pfaff or in practical effect to give it a sub-license (Op., R. 1709, 1710; Gx. 130, R. 1193). On May 27, 1959 Singer requested that Gegauf amend the assignment agreement to delete therefrom the provision of paragraph (3) with respect to Pfaff (Op., R. 1709; Gx. 130, R. 1193-94).

The trial court set forth Singer's request and with respect thereto found: "The sole motive and reason prompting this deletion was very plainly and unequivocally expressed by Singer; it was that Singer might 'have a better chance of prevailing before the Tariff Commission' in its efforts to exclude all machines which infringed on Gegauf I" (Op., R. 1709). The Government, as said above, misstates this finding of the trial court. It converts it into a finding that "Singer and Gegauf

agreed to amend" the agreement "in order to give Singer 'a better chance of prevailing before the Tariff Commission.' (Op., R. 1709.)" (Govt. Br. 38-39). It thus squarely changes a motive of Singer's *in asking for an amendment* into a motive of "Singer and Gegauf" *in executing the agreement*, thus bringing Gegauf into a statement expressing a motive, which the trial court clearly attributed solely to Singer. The Government does this notwithstanding the fact that in its Post-Trial Brief it said, *"Singer* sought the assistance of co-conspirator Gegauf in 1959 in order to improve *its* chances of prevailing before the Tariff Commission in *its* exclusionary efforts" ((unprinted), Tr. 6409, emphasis supplied).

In its Post-Trial Brief the Government devoted to the discussion of Singer's request to Gegauf exactly one sentence, the sentence immediately above quoted ((unprinted), Tr. 6409). In neither its Post-Trial Brief nor in its Jurisdictional Statement did the Government as much as make mention of the *agreement of amendment*, which it now presents to this Court as a major conspiratorial act of cooperation, one of the three pillars of its case.

B. Gegauf extracted a toll from Singer as a condition to Gegauf's consent to the deletion of the Pfaff provision.

The Government does not mention the fact that Gegauf would make no amendment until it extracted from Singer a consideration it demanded, and expressly notified Singer that it would not (Gx. 132, R. 1195). Gegauf on June 10, 1959 replied to Singer that "in principle" it was ready to amend the assignment agreement to omit mention of Pfaff but only on certain conditions insisted upon by Gegauf (Op., R. 1709; Gx. 132, R. 1194-95). It may be remembered

that paragraph 6 of the Singer-Gegauf cross-license agreement of April 14, 1956 provided that each party must disclose to the other any agreement already concluded relating to the patents or patent applications covered by the agreement (Gx. 26 (S-3), R. 1067). Gegauf in its reply, for the first time, advised Singer that on May 5, 1955 it had executed an agreement with Phoenix, a West German manufacturer of household sewing machines, which granted to Phoenix "unlimited right to use the principle described" in Gegauf's German patent application covering a stack of cams with a single cam follower (Gx. 132, R. 1194-95, (unprinted), Tr. 3735; Op., R. 1708, 1709). Although the language of the grant, on its face, appeared to grant Phoenix complete rights under any Gegauf patent covering such principle, Gegauf said that he considered that his agreement related only to Gegauf's German application and was applicable to West German territory only (Gx. 132, R. 1195). He, however, was quite unwilling to act upon his conclusion. On the contrary, he demanded that the proposed amendment substitute Phoenix for Pfaff or, in the alternative, if Singer did not desire that, he stated he would agree that both Pfaff and Phoenix be omitted "under the explicit condition that you assume to their full extent all consequences that might fall on us on account of our agreement with Phoenix from April 5th, 1955" (Gx. 132, R. 1195; Op., R. 1709). He added: "We look forward to your comment", and of course did not return to Singer the proposed agreement it had sent to him deleting the provision relating to Pfaff (Gx. 132, R. 1195; Gx. 131 (unprinted), Tr. 3731-32).

Singer was annoyed that Gegauf had not disclosed the existence of such Phoenix agreement to Singer, as

Gegauf was required to do under paragraph 6 of the Singer-Gegauf cross-license agreement, particularly in view of the fact that it was Gegauf who inserted such paragraph in the cross-license agreement, and it disliked Gegauf's attitude (Op., R. 1709-10; Gx. 136, R. 1199; Gx. 26 (S-3), R. 1067). In order, however, to obtain deletion of the provision with respect to Pfaff from the assignment agreement, Singer had to submit to Gegauf's demand (Op., R. 1710; Gx. 136, R. 1199-1200). On July 14, 1959 Singer wrote to Gegauf agreeing to indemnify Gegauf against losses Gegauf might sustain through any legal action which might be brought by Phoenix against Gegauf based upon a claim by Phoenix that the agreement of May 5, 1955 extended any rights to Phoenix under the United States Gegauf Patents Nos. 1 and 2 (Op., R. 1710; Gx. 137, R. 1202). Gegauf thereupon executed an agreement dated July 22, 1959 deleting the provision with respect to Pfaff from the assignment agreement (Op., R. 1710; Gx. 139, R. 1204-05).

The Government refers to this as "the continuing cooperation of Singer and Gegauf to exclude their Japanese competitors" (Govt. Br. 38) and asserts that it shows that "Singer could count on Gegauf to assist it in the tariff proceeding" (Govt. Br. 47, n. 23). And so Gegauf, who in its assignment agreement had reserved a right to protect Pfaff because of "long time very friendly personal connections with the directors of Pfaff" (Gx. 139, R. 1206), who had "never extended" to Pfaff any of the rights so reserved (Gx. 139, R. 1206), who at the time of Singer's request to it had "no close connection whatsoever with Pfaff" (Gx. 132, R. 1194), and who, upon being requested to give up a right which meant practically nothing to him, demanded indemnification from liability

that might accrue to him for a possible past breach of a contract with Phoenix, which had no relationship to Singer's request to Gegauf to eliminate the provision relating to Pfaff except as such request created an occasion for Gegauf to bludgeon Singer, which it forthwith did, is pictured by the Government as ardently rushing to Singer's aid and "cooperating" with it in prosecuting the Tariff Commission proceeding against "Japanese competitors", thus establishing a boycott by Singer and Gegauf against the Japanese Empire. All of this with respect to a proceeding which Singer declared (Ex. S-11, R. 1597, 1616-17; Gx. 130, R. 1193; Gx. 158, R. 1219), Gegauf knew (Gx. 160, R. 1221; Gx. 139, R. 1206), the Government admits (Govt. Br. 20, 23, 38), and the trial court found (Op., R. 1707, 1709, 1710), had been brought to prevent the importation of all infringing machines whatever their source—Japan or Europe. Not very convincing, we submit.

The trial court referred to this Pfaff-Phoenix amendment episode as "further evidence of the arm's length dealing which had characterized all Singer's dealings with Gegauf" (Op., R. 1709).

POINT III.

THERE IS NO ISSUE IN THIS CASE OF AN ILLEGAL AGGREGATION OR COMBINATION OF GEGAUF PATENT NO. 1 AND THE HARRIS REISSUE PATENT IN THE HANDS OF SINGER.

Claims 5, 6 and 7 of the Harris reissue patent, the only claims therein relating to a multiple cam mechanism, each claims *every element* of Claim 1 of Gegauf Patent No. 1 in *conjunction with* some other feature (Dx. 137, R. 1540; Stip. Par. 29, R. 33; Stanford, R. 587-88). The

Harris reissue patent thus is wholly subservient to Gegauf Patent No. 1 and not a single sewing machine can be excluded by the Harris reissue patent that is not excludable by Gegauf Patent No. 1. Such fact is fully covered in Paragraph 29 of the Stipulation of Facts (R. 33) and it was conceded by the Government in open court. At page 150 of the printed record the following colloquy appears:

> "Mr. Pettit: • • •
>
> "He [Mr. Elkins] has not pointed out—and I think he should point out—that the Harris patent cannot possibly be infringed without infringing the Gegauf one.
>
> • • • • •
>
> "Mr. Elkins: We agree, incidentally with what Mr. Pettit has to say about the coverage of the Gegauf one patent and the coverage of the Singer-Harris patent."

Government counsel further advised the trial court that the acquisition of the Harris reissue patent by Singer "did not contribute at all to the offenses which we allege here" (R. 209).

POINT IV.

THE GOVERNMENT HAS ABANDONED ANY CONTENTION THAT THE ALLEGED CONSPIRACY IN ANY WAY INVOLVED GEGAUF PATENT NO. 2, THE JOHNSON PATENT OR THE PERLA PATENT.

A. Gegauf Patent No. 2.

The Government clearly has abandoned any contention that the alleged conspiracy in any way involved Gegauf Patent No. 2, on which Singer has brought no action, commenced no proceeding and made no attempt to enforce

by suit, notice or threat of suit (Stip. Par. 85, R. 55). The Government's present argument does not relate to such patent. It argues that the purpose and intent of the cross-license agreement, the assignment agreement, the amendment of such agreement were, respectively, to obtain protection under Gegauf Patent No. 1 against Japanese machines, to enable Singer to enforce Gegauf Patent No. 1 against Japanese infringing machines and to give Singer a better chance of winning the Tariff Commission proceeding, a proceeding based solely on Gegauf Patent No. 1 (Govt. Br. 23-24). Thus, the purpose and intent on which the Government relies to establish the alleged conspiracy relate to Gegauf Patent No. 1 only and in no way to Gegauf Patent No. 2.

Furthermore, such abandonment is a necessary consequence of the Government's acceptance of the trial court's findings as to Singer's motivation in entering into the agreement assigning Gegauf Patent No. 2 to it (Govt. Br. 27). The trial court found that Singer's motive in obtaining Gegauf Patent No. 2 was to avoid any possibility of a dispute with Messerschmitt, to whom Singer had granted a license to sell in the United States machines which could have been excluded by Gegauf if it held Gegauf Patent No. 2 (Op., R. 1695-96). Singer's motive in acquiring Gegauf Patent No. 2, as found by the trial court, had nothing to do with the enforcement of the patent, and, as said, the Government has accepted such finding.

B. The Johnson and Perla patents.

The Government likewise has clearly abandoned any contention that the alleged conspiracy in any way involved

the Johnson or Perla patents.[11] The Government makes occasional factual reference to these patents in its Statement of Facts, but in its argument it does not once refer to the Perla patent, and makes only a reference to the fact that certain infringement actions brought by Singer against machines infringing Gegauf Patent No. 1 included the Johnson patent. There is no suggestion in the argument or elsewhere that any issue is raised as to an illegal aggregation or combination of these patents with any other patent in Singer's hands. Furthermore, the trial court answering the Government's charge that there was an underlying agreement or conspiracy to pool patents, stated that the "plain answer" to this was that it had found that "there was absolutely no agreement or conspiracy." The Government does not challenge this finding (Govt. Br. 27).

---

[11] The Government concedes that the Johnson and Perla patents resulted from Singer's own research and that such patents were lawfully acquired (Op., R. 1654-55; R. 166, 209). If these patents had been issued during the years 1957, 1958 and 1959, they would have been able to exclude, respectively the following number of machines not excludable by Gegauf Patent No. 1 alone had it been so issued, such number representing the portion of the household sewing machine market in the United States indicated:

	1957	1958	1959
Number of machines ...	0	249	800
Portion of market	0.00	0.00015	0.0004

Thus, out of every 10,000 household sewing machines in the United States market during the year 1959, the two Singer patents would have been able to exclude four machines that would not have been excludable by Gegauf Patent No. 1, or one twenty-fifth of one per cent (Stip. Pars. 128-29; R. 65; Ex. S-22-S-23 (Gx. 188-89), R. 1332; Ex. S-27 (Gx. 193), R. 1335; Ex. S-20 (Gx. 196), R. 1337; see Appendix, p. 13a, for the figures from which the above portions were calculated and the evidence upon which such figures are based).

POINT V.

SINGER'S ACQUISITION OF GEGAUF PATENT NO. 1 AND ITS ENFORCEMENT OF SUCH PATENT AGAINST INFRINGERS WAS NOT A PART OF ANY COMBINATION OR CONSPIRACY.

We believe that the foregoing portion of this brief disposes of various side issues raised by the Government on this appeal and leaves as involved herein solely Singer's acquisition and enforcement of Gegauf Patent No. 1. The Government argues that Singer's acquisition and enforcement of Gegauf Patent No. 1 constituted a combination and conspiracy between Singer and Gegauf. The trial court ruled against the Government on every issue it raised in connection therewith.

The trial court made among others the following findings:

> "With the exception of these specific limitations [set forth in the assignment agreement] on Singer's right to assert the Gegauf patent when issued, no agreement was made or understanding reached by the parties with respect to the licensing, enforcing or use of their patents. These writings were the entire agreement of the parties.
>
> "If one were to describe the attitude of these alleged 'conspirators' throughout, it would have to be in terms of suspicion, wariness and self-preservation. It is most striking that, throughout, their dealings were characterized by an absence of unity or identity of any common purpose or motive. Singer's sole interest was to protect its '401' machine against all infringing machines." (Op., R. 1693)
>
> "[The agreement] resulted from a fixed determination on each one's part to give and pay for nothing more than was absolutely necessary to secure its

respective end and to carry on the protracted negotiations as distantly as possible." (Op., R. 1694)

"Here, certainly, was further evidence of the arm's length dealing which had characterized all Singer's dealings with Gegauf." (Op., R. 1709)

With respect to an attempt by the Government to relate one of the provisions of the Singer-Gegauf license agreement to an alleged conspiracy "to pool patents" in Singer and to establish broad patent monopolies in both conspirators, in order to exclude Japanese competition, the trial court stated:

"The plain answer to this is that we have found that there was absolutely no agreement or conspiracy." (Op., R. 1712)

Referring to a restriction on Singer's right to sue Pfaff contained in the Gegauf-Singer assignment agreement, the trial court said:

"Aside from this there was no other understanding or agreement with respect to licensing or enforcing by infringement action or otherwise, any patent, then owned or subsequently acquired, or with respect to the use in any way of any such patent, alone or in conjunction with any other patent. The written agreement expressed the complete agreement and understanding of the parties and we conclude that it contained nothing illegal." (Op., R. 1714)

In an endeavor to surmount these findings of the trial court the Government sets forth statements, throughout its brief, of its conception of Singer's and Gegauf's alleged

conspiracy, in various forms, including all of the following:

	Govt. Br. Page
". . . engage in a course of concerted conduct intended to further their joint purpose of eliminating common competitors"	23
". . . agreed together upon acts intended to enable one or both of them to exclude their Japanese competition . . . for their mutual benefit"	23
". . . cooperated . . . to facilitate the exclusion of their common competitors"	23–24
". . . conspired together by pursuing a common exclusionary purpose through concerted acts . . ."	24
". . . engaged in a course of concerted conduct that . . . was intended to further their joint purpose of excluding their common competitors, the Japanese . . ."	26
". . . concerted efforts to exclude common competitors . . ."	27
". . . repeated joint action motivated by a common purpose to exclude competitors . . ."	27
". . . AGREED UPON CONCERTED ACTS . . . TO EXCLUDE THEIR JAPANESE COMPETITION . . ."	28
". . . facilitate by cooperative conduct the exclusion of competitive Japanese machines . . ."	31
". . . shared purpose of excluding the Japanese . . ."	33
". . . cooperative efforts of Singer and Gegauf to eliminate their joint competitors, the Japanese"	34

Govt. Br. Page

". . . continuing cooperation of Singer and Gegauf to exclude their Japanese competitors . . ." 38

"AGREEMENTS . . . TO ACT TOGETHER SO AS TO EXCLUDE COMMON COMPETITORS . . ." 39

". . . motivated by a common desire to exclude their Japanese competitors from the United States, discussed and agreed upon concerted acts which could best effectuate this mutual purpose . . ." 39

". . . acting in concert for the explicitly and repeatedly stated purpose . . . to exclude common competitors" 39

". . . cooperate in their efforts to exclude the Japanese . . ." 42

". . . cooperative transfer . . . for a joint, exclusionary purpose . . ." 42

After the Singer-Gegauf cross-licensing agreement ". . . Gegauf could not have proceeded to license the Japanese without considering and giving weight to the consistency of any such action with the spirit of its prior arrangements with Singer" 43

After the Gegauf-Singer assignment agreement "Singer could not, consistently with the expectations it had purposely engendered in Gegauf, then turn and license the Japanese without the consent of Gegauf" 44

". . . the common purpose was clearly present: to cripple Japanese competitors" 48

". . . shared purpose of using them to hurt their common competitor" 48

A. The issue here involved relates solely to Singer's acquisition of Gegauf Patent No. 1 and the enforcement of that patent against *infringers* thereof. Restraint of non-infringing competitors is not involved.

There is a significant feature about the foregoing phrases used by the Government. It is that they all refer to the exclusion of *Japanese competitors* or *competing Japanese machines* and not, as they should, to the exclusion of machines *infringing* Gegauf Patent No. 1. There, of course, is a vast difference and this was specifically pointed out in Defendant's Motion to Affirm the judgment herein made to this Court on October 18, 1962 (pp. 21-23). The Government has now stopped referring to findings and statements that specifically relate to infringing machines as if they were statements relating to competing machines generally. In all other instances, however, it still throughout its brief refers to Singer's seeking to exclude its "Japanese competitors" or "competing Japanese sewing machines". It may be embarrassing to the Government that this case, by attrition resulting from the loss and abandonment by the Government of all other issues, has now resolved itself into a case involving solely the acquisition of a single patent and the enforcement thereof against *infringers* of that patent. The Government, however, should not confuse the issue, and the only issue, that is involved, by repeatedly referring to the exclusion of "Japanese competitors" and "Japanese competing machines."

Although the Government's contention relates solely to machines infringing Gegauf Patent No. 1 it, as can be seen, treats Japanese manufacturers and exporters of such infringing machines as a class separate and apart from other infringers. This has the effect of creating

a wholly artificial class. The only "class" that is involved in this case is one composed of all people infringing Gegauf Patent No. 1. That would still be true even if there were not a single infringer other than one of Japanese nationality. Singer did not wish to exclude with such patent anyone because of nationality; it wanted to exclude infringers.

In considering this fact it must be borne in mind that infringers are wrongdoers, depriving the patent owner of his property and violating the laws of the United States, laws which prevent unfair competition in trade and commerce and which render the selling of infringing products in competition with the owner of a patent unfair competition. Such unfair competition, under certain circumstances, is subject to restraint by the President upon recommendation of the Tariff Commission. *In re Orion Co.*, 71 F. 2d 458 (C.C. P.A. 1934). It is possibly subject to restraint by the Federal Trade Commission and certainly is subject to restraint by infringement actions. The Government, however, treats this "class" of wrongdoers as if they had a vested right *in infringing the Gegauf patent* and as if they were ordinary businessmen selling non-infringing merchandise in competition with the owner of Gegauf Patent No. 1.

B. Notwithstanding the Government's protestations to the contrary, its contention that a conspiracy existed is based on the premise that agreements were made or understandings reached between Singer and Gegauf outside of the written agreements between them.

The trial court found that outside of the written agreements themselves no agreements or understandings of any nature whatever were made between Singer and Gegauf

with respect to the use that Singer would make of any patent it owned or subsequently acquired and, specifically, that there was no agreement or understanding of any kind relating to the licensing or not licensing or the enforcement or non-enforcement of any patent, whether then owned or subsequently acquired (Op., R. 1683, 1698, 1714). The Government purports to accept the trial court's findings that there was no agreement or understanding between Singer and Gegauf outside of the written agreements and to accept the findings of the trial court as to the motivations of Singer and Gegauf in entering into each agreement (Govt. Br. 27). We submit, however, that the various above quoted phrases used by the Government clearly reflect, notwithstanding its protestations to the contrary, that, in fact, the underlying premise of the Government's contention is that an agreement or understanding was reached between Singer and Gegauf as to the use that would be made by Singer of the Gegauf patent.

The Government uses as a heading for its basic legal contention, the following:

> "B. AGREEMENTS * * * TO ACT TOGETHER SO AS TO EXCLUDE COMMON COMPETITORS VIOLATE THE SHERMAN ACT". (Govt. Br. 39)

Immediately under that heading it states that Singer and Gegauf, "motivated by a common desire to exclude their Japanese competitors * * * discussed and agreed upon concerted acts which could best effectuate this mutual purpose * * *" (Govt. Br. 39). The Government, at least twice, states that Singer and Gegauf "agreed together upon acts intended to enable one or both of them to exclude their Japanese competition * * * for their mutual

benefit" (Gov't Br. 23, 28). The Government almost completely unmasks the fact that it is relying upon the existence of an agreement or understanding between Singer and Gegauf. It states, that after the Singer-Gegauf cross-license agreement, "Gegauf could not have proceeded to license the Japanese without considering and giving weight to the *consistency of any such action* with *the spirit* of its prior *arrangements* with Singer".[12] This is followed by the statement that, after the Gegauf-Singer assignment agreement, Singer was under "an even greater impediment" and that "Singer could not, consistently with *the expectations* it had purposely engendered in Gegauf, then turn and license the Japanese without the consent of Gegauf" (Govt. Br. 43, 44, emphasis supplied). Here is pictured as complete and as burdensome an obligation as would be imposed by a formal written agreement. Yet according to the Government it is not relying upon an agreement. Such argument does not even dare to pay as much as lip service to an acceptance of the trial court's finding that there was no agreement whatever restricting licensing.

Possibly the Government considers that there was a phantom agreement. We think the court's finding covers all possibilities along that line, too, particularly since the Government before the trial court made precisely the same argument as above set forth (R. 443-44). After dramatically laying the foundation therefor the Government asserted that, under the very circumstances now pictured by the Government to this Court, any licensing by Singer

[12] How hollow the Government's claim is, is shown by the Government elsewhere in its brief, where in arguing the claimed deleterious effect of the provisions of the second sentence of Clause 1 it says: "The cross-licensing agreement did not give either Singer or Gegauf an exclusive license under the other's patents; it merely prohibited each from attacking the other. *Each was free to grant other licenses.*" (Govt. Br. 65, emphasis supplied)

would be a double-cross of Gegauf, and, apparently thinking well of Singer for the moment, the Government proclaimed that Singer "would not have stooped" to such "a stunt". The trial court ended the dramatics and punctured the concept of a phantom agreement by leaning over and asking, "Why wouldn't they have stooped to it? They are in business to make an honest dollar from honest, legitimate business deals * * *." (R. 444)

As will be noted, the trial court subsequently made express findings that the written Singer-Gegauf cross-license agreement constituted the entire understanding of the parties and that "there was no agreement or understanding about how each would prosecute, license or otherwise restrict its ownership of any patents it might obtain * * *" (Op., R. 1683); that, outside of the written Gegauf-Singer assignment agreement, "no agreement was made or understanding reached by the parties with respect to the licensing, enforcing or use of their patents" (Op., R. 1693), and that "there was no other understanding or agreement with respect to licensing or enforcing by infringement action or otherwise, any patent, then owned or subsequently acquired, or with respect to the use in any way of any such patent, alone or in conjunction with any other patent" (Op., R. 1714).

The Government had urged upon the trial court its theories, not only with respect to "agreement", "understanding" and "conspiracy" but also with respect to "exclusory combination", "mutuality of interest", "unity of purpose", and numerous other word combinations, which certainly included any idea the Government may now have with respect to phantom agreements. The trial court, answering the Government's various word combination contentions, found, "It is most striking that, throughout

their dealings were characterized by an absence of unity or identity of any common purpose or motive. Singer's sole interest was to protect its '401' machines against all infringing machines" (Op., R. 1693). The Government now asks this Court to accept its contention to the contrary rather than the trial court's findings, but does so under the guise that it is not challenging such findings.

C. There is no validity to the Government argument that Gegauf contributed to the conspiracy property worth millions of dollars for the benefit that Gegauf would gain in Europe through Singer's "crippling" the Japanese sewing machine industry.

With its contention before the trial court that Singer and Gegauf were joint conspirators benefiting alike *in the United States,* the Government ran into the fact that Gegauf in 1957 had imported exactly 1,600 machines into the United States (Stip. Par. 121, R. 64), that Gegauf did not want to grow in size (Gx. 62, R. 1162), and that Gegauf's interest was in Europe. That, in turn, left its argument that Gegauf's benefit *in the United States* was a motivation for its entering into a conspiracy quite unconvincing, as is demonstrated by the trial court's finding that:

> "Gegauf's prime interest was the protection of its machines in Europe from Japanese infringers—a danger which it was far from risking for the sake of dealing as it did with Singer. Gegauf gave but little weight to what might happen to Singer in the United States so long as Singer's danger did not affect Gegauf in Europe." (Op., R. 1693)

Thus the trial court in effect was finding that, notwithstanding the fact that "what might happen to Singer"

in the United States might similarly happen to Gegauf in the United States, Gegauf gave but little weight thereto, so long as it did not affect it in Europe, a clear finding that Gegauf had little interest in the United States as such.

Now that the trial court has found that Gegauf's interest was in Europe, not the United States, the Government's argument is devoted to a contention that Singer's "crippling" the Japanese sewing machine industry so that it could not compete effectively in Europe, was Gegauf's motivation for entering the conspiracy. (The Government cites no finding supporting such assertion and there is none.) It argues that, to that end, Gegauf contributed to the conspiracy the excess of the value of Gegauf's patent over the $90,000 paid to it by Singer. The Government, by citing and quoting Gegauf as its valuation expert, suggests a value therefor so colossal that Gegauf "could obtain *every year* many times more than the single payment of $125,000"[13] (Govt. Br. 35-36, n. 17; Stip. Par. 79, R. 50), a value obviously far exceeding the million dollars

[13] Here, once again, a self-serving statement made in a bargaining conference for the benefit of the person making it, is accepted as proof of the fact stated, although such "fact" is absurd on its face. The statement by Gegauf in bargaining with Singer, that he could receive each year many times more than $125,000, thus making it "worth" millions of dollars, is accepted as if it were an appraisal sworn to in open court by an unbiased, expert witness. We submit that the attempt to establish facts by taking statements, made in a party's own self-interest in a bargaining conference for the express purpose of gaining a point in negotiations, unsupported by any confirming evidence whatsoever, has in this case reached the point of utter and complete absurdity. This type of self-serving statement, not statements made against one's interest, but self-serving statements, constitutes the primary basis for the Government's contentions in this case (for two of numerous other examples, where it even relies on hearsay reports of such self-serving statements, see, *supra*, pp. 79-83).

Gegauf originally suggested he would like to obtain (Op., R. 1686), as to which the trial court, showing its ever present practical viewpoint, suggested to the Government that possibly Gegauf had been advised to "ask him for a million dollars and see how much you can get out of it" (R. 145). (He ultimately got $90,000.)

The Government further argues that Singer's magic in obtaining from Gegauf this gigantic contribution to their conspiracy consisted of Singer's continuing "to drive home" the point that Gegauf would benefit "more than Singer" by enforcement of the Gegauf patent in the United States, because the *"Brother Pacesetter"* machine, a Japanese-made "free-arm" type of machine infringing Gegauf's Patent No. 1, was in "direct" competition with Gegauf's free-arm type of machine, while Singer did not sell such type of machine (Govt. Br. 36). The Government refers to the Pacesetter machine as "a big selling" machine but the Stipulation of Facts which it signed shows that in the years 1957, 1958 and 1959 the following number of Pacesetter machines were imported into the United States for such respective years: 1202, 396 and 0 (Ex. S-26 (Gx. 192), R. 1335).

It seems incredible that the Government could seriously argue that Gegauf, whose total imports to the United States in 1957 had been only 1,600 machines (Stip. Par. 121, R. 64), a majority of which probably were "free-arm" machines (Gx. 62, R. 1122), could have contributed a value far in excess of $1,000,000, *motivated by the thought* that if importation of a few "free-arm" type machines infringing the Gegauf patent was stopped, or even by the thought that if *all* machines infringing such patent were stopped, the Japanese sewing machine industry would be "crippled" to such an extent that it "would

discourage Japanese competition in Europe" (Govt. Br. 36, 48). How fanciful can one get! Over the past several years the Japanese sewing machine industry has been either the second, third or fourth largest export industry in the Japanese Empire (Fairman, R. 805-06). The *total* imports into the United States *of all machines infringing Gegauf Patent No. 1* during the years 1957, 1958 and 1959 amounted to 31,142, 41,219 and 39,344 machines, respectively, and, for such years, amounted to 3.3%, 4.2% and 3.1%, respectively, of the total imports of Japanese-manufactured sewing machines *into the United States* in those years (Dx. 189, R. 1586), more than 1,100,000 such machines having been so imported in 1959. The percentage that such infringing machines represented of exports from Japan *throughout the world* during those same years were, respectively, *1.8%* (Dx. 189, R. 1586; Ex. S-31, R. 1623), *2.4%* (Dx. 189, R. 1586; Ex. S-32, R. 1624) and *1.8%* (Dx. 189, R. 1586; Ex. S-33, R. 1625).

Yet the Government here seriously argues that the "crippling" of the Japanese sewing machine industry so that it could not effectively compete in Europe was the benefit that was to be obtained by Gegauf out of this alleged conspiracy. The Government says, and hard as it is to believe, it is there in black and white: "When Gegauf became convinced that crippling the Japanese in the United States would help it in Europe, it became willing to sell to Singer, but only because it was so convinced" (Govt. Br. 48). It should be noted that though it might not be far-fetched to believe that if approximately *35,000 infringing machines* were excluded from the United States they *might* be sent to Europe (which may have been Gegauf's reason for being unenthusiastic about assigning the patent to Singer) the Government gets no

sustenance out of that. Any such occurrence would have been a clear detriment to Gegauf and could not possibly have constituted a motive for assigning his patent. It is, therefore, not only logical *but necessary* that the Government argue that the "crippling" of the whole Japanese sewing machine industry was the objective to be obtained, *a crippling which would eliminate such industry's capacity to compete effectively in Europe.* It is therefore an argument of necessity and it is neither strange nor unexplainable that the Government cites no authority in support of its fanciful, but unqualified, statement of fact.

D. There was no combination or conspiracy through concerted action for the mutual benefit of Singer and Gegauf.

When there is removed from the Government's case its reliance upon non-existent agreements or understandings between Singer and Gegauf, its mistaken theory as to the significance and the intent of Clause 1 of the cross-license agreement, its inferential attacks on the claims of a patent which it has conceded to be valid, its reliance upon motivations and purposes contrary to those found by the trial court and its contention that the Tariff Commission proceeding was brought to exclude the Japanese, in the face of the plain fact that it was brought to exclude all infringers, there is not much left. There is, in fact, hardly anything left other than the sale and purchase of a patent. There are, of course, various accompanying circumstances, as no sale and purchase can be made in a vacuum, but none of them, nor all of them combined, remotely resembles a combination or conspiracy under Section 1 of the Sherman Act.

To start with, there was no coercion of any nature by Singer or Gegauf upon the other, and there existed no

power or dominance of one over the other. Each was independent and free to act in its best interest. Up to the time that Gegauf made the assignment it was free to use its patent rights as it saw fit, including licensing or not licensing and enforcing or not enforcing such rights (Op., R. 1683). After Singer acquired the patent it similarly was free to use the patent as it saw fit. There was no agreement or understanding of any nature between Singer and Gegauf as to how Singer would use the patent or as to its licensing or not licensing or enforcing or not enforcing such patent. It was so found by the trial court (Op., R. 1693, 1714) and (except with respect to the Government's phantom obligation under the phantom contract) the Government accepts such finding (Govt. Br. 27).

Gegauf, of course, knew that Singer had invented and developed a machine which it was manufacturing and marketing under the patent as licensee, that there were infringers of the patent, the largest of which were Japanese, that Singer was paying a large sum of money for the patent, and that Singer had frankly stated to Gegauf that the reason it wanted to purchase the patent was that Singer could enforce it better than Gegauf could (Op., R. 1693-94). The mention or discussion of the obvious does not constitute a conspiracy or combination and accordingly neither the conveying nor the receipt of such information constituted any part of a conspiracy or combination.

Even if Gegauf had had a substantial interest in having Japanese infringing machines excluded from the United States (which it did not (pp. 104-08, *supra*)) and even if such interest as it had in enforcement had related solely to Japanese infringing machines (of which there is not the slightest evidence), and even if it had itself anticipated

that Singer would proceed only against the Japanese and not against Europeans (which in fact it had good reason to believe would not be the case (*supra*, pp. 40-41; Op., R. 1693-94; Govt. Brief in opposition to Motion to Affirm, p. 5)), there was no question of concurrent or joint action against Japanese infringing machines. After Singer's acquisition of the patent it was completely free to act in its own self-interest with regard to enforcing or not enforcing and with regard to licensing and not licensing, as it in fact did. Gegauf had no control or domination over Singer and did not have the capacity to affect its actions in any way. There was only one patent and there could be only one enforcer thereof. This is not a case of concurrent or parallel action and it is not a case of competing patents, as is repeatedly and erroneously asserted by the Government. It is, on the contrary, a case of competing applicants for a single patent, with the one having the earlier priority date and the right to the patent selling it to the other (Stip. Pars. 28-29, R. 32-33; Point III, pp. 91-92, *supra*). There literally was no power or opportunity for the two to act in unison when Gegauf and Singer each retained full control of the use of their respective patent rights at such time as it owned them, in succession, not concurrently.

A patent, of course, bestows no rights and it has only one function, and that is to exclude. Before this case we had never heard it suggested that the hope, belief or anticipation of the vendor of an item which can be used for one purpose only, that such item would be used for such purpose constituted a conspiracy. (See Govt. Br. 48.) In a far more delicate field than that involved in "reasonable restraint" questions, that is, in the field of price maintenance, mere reliance upon the individual self-interest of others to maintain suggested prices does not

fall within the reach of Section 1 of the Sherman Act. Any argument that it would do so in a case such as this is clearly unsustainable. *United States* v. *Parke, Davis & Co.*, 362 U. S. 29, 46-47 (1960), quite clearly shows that one who merely relies upon "individual self-interest" of retail dealers to bring about "general voluntary acquiescence which has the collateral effect of eliminating price competition", engages in no combination or conspiracy. Here, where no question of per se violation is involved, the principle is all the more applicable. If Gegauf relied, as it had to rely, upon Singer's own self-interest, it engaged in no combination or conspiracy.

Out of the fact that Japanese manufacturers and exporters were the largest infringers, the Government seeks to build a case that Singer was directing its efforts "against the Japanese". To the extent that anything is directed against the whole it of course is directed against the parts, large and small, and anything directed against all infringers is directed against the largest infringers as well as to the smallest. The Government's argument, however, raises the question: How can the owner of a patent enforce it without the greatest effect thereof being against the greatest infringers thereof? No amount of evidence that Singer wished to exclude all infringers and that it took steps to exclude all infringers or findings of the trial court to that effect, affects the Government in the slightest; it still finds a way, over and over again, to repeat that Singer was directing its efforts "against the Japanese". The trial court answered this argument quite pointedly. It said:

> "We find that the Tariff Commission proceedings were brought by Singer in a bona fide attempt to obtain protection for its '401' machine by an order

> excluding *all* unlicensed machines which infringed on Gegauf I patent. That these proceedings were motivated by the deluge of infringing Japanese imports and that Singer's energies were primarily directed to excluding these imports is not evidence of any unlawful conspiracy to exclude the Japanese and open the way for the European imports. The principal threat to the Singer machine came from the Japanese imports not from European production, but Singer sought to bar all infringing machines." (Op., R. 1710)

The Government argues that the trial court found that Singer "did not intend to license others under its patent" (Govt. Br. 44). It would have been entirely immaterial if Singer had affirmatively intended never to license anyone. The trial court's finding, however, was not to such effect. It was the finding that at the time of the purchase Singer had no affirmative intention of licensing others, and not a finding that Singer had the affirmative intention of never licensing another at any time. Singer in fact did license Sears, Roebuck (Govt. Br. 36, n. 17). It is significant that if Gegauf had any right to expect that Singer would not license and that it would enforce, the Gegauf patent for the "mutual" benefit of Gegauf and Singer, this action of Singer in licensing Sears, Roebuck was squarely in the teeth of Singer's obligation and of Gegauf's expectation, in that it seriously impaired, for Singer's benefit alone, the prospect for the successful prosecution of the Tariff Commission proceeding (Op., R. 1706; Gx. 408, R. 1173).

Even if Singer had a policy of not licensing patents under which it was producing and selling merchandise, Gegauf had no vested rights or interest in Singer's policy, which could be changed at any time to suit Singer's wishes. If Gegauf had any hope or expectation that Singer would

enforce the patent against anyone, it was the hope, and only the hope, that Singer, relying upon its own self-interest, would act in accordance with that self-interest. That he could have had nothing else is indicated by the fact that he was not so bold as to ask for an agreement that Singer would use its patent in any particular manner. Singer obviously would not buy the patent and then put the patent, its business and its own welfare at the disposal of Gegauf. The suggestion would seem on its face absurd when it is realized that at the time the patent rights were acquired by Singer, Singer was selling thereunder at the rate of 150,000 machines per year (Ex. S-24 (Gx. 190), R. 1333; Stip. Par. 17, last sentence, R. 28) while Gegauf was selling just 1,600 (Stip. Par. 121, R. 64).

The Government would have it both ways, however. It in effect says that if Singer and Gegauf operated wholly independently of each other it is just as bad as if they had agreed on a course of conduct. It says that Gegauf had no reason for an agreement since Gegauf was transferring its rights "to the United States, the very place where it knew Singer had a stronger motive to exclude the Japanese than Gegauf had" (Govt. Br. 48). In other words, according to the Government, if the transferor of a patent, having no promise or commitment whatever, relies upon the purchaser's having a motive to enforce the patent in its own self-interest, that becomes a combination or conspiracy as fully as if they had entered into an agreement to that end. The *Parke Davis* case, *supra*, is clearly to the contrary.

POINT VI.

THE CASES CITED BY THE GOVERNMENT DO NOT SHOW THE EXISTENCE OF ANY COMBINATION OR CONSPIRACY IN THIS CASE.

The Government asserts that the trial court held that no conspiracy or combination could be found "because", throughout their dealings the attitude of Singer and Gegauf was one of "suspicion, wariness and self-preservation"; neither party "was eager for the agreement finally made"; Singer's concern was Japanese competition in the United States while Gegauf's was in Europe; and each "was determined to put into the arrangement no more than was absolutely necessary" (Govt. Br. 45).[14] It then devotes two pages of its brief, and cites *United States* v. *General Electric Co.*, 80 F. Supp. 989 (S.D.N.Y.), *United States* v. *Line Material Co.*, 333 U. S. 287, and *United States* v. *Masonite Corp.*, 316 U. S. 265, in support of a contention that the existence of the foregoing facts did not make impossible a conspiracy between Singer and Gegauf (Govt. Br. 45-46). No one would argue that a conspiracy was impossible "because" of any or all of such facts combined and the trial court made no such finding. The mutual attitudes of "suspicion, wariness and self-preservation" shown "throughout the dealings," and their other facts found by the trial court and referred to by the Government, clearly made the existence of a conspiracy between Singer and Gegauf quite unlikely and the trial court obviously cited them as indicating such unlikeliness and not as a holding that they made a conspiracy impossible. Such facts, together with other facts as found by the trial court, taken together, clearly support a finding that no conspiracy existed.

---

[14] Elsewhere it states that the court so held "because the only agreements between Singer and Gegauf were the three [written agreements] it had found * * *" (Govt. Br. 27).

The Government cites three conscious parallelism cases (Govt. Br. 44) as demonstrating that a combination or conspiracy can be formed without the existence of a formal agreement: *Eastern States Lumber Ass'n* v. *United States*, 234 U. S. 600; *Interstate Circuit* v. *United States*, 306 U. S. 208; *United States* v. *Masonite Corp.*, 316 U. S. 265. These conscious parallelism cases have not read out of the Sherman Act the requirement for an agreement in *conspiracy* cases. It is true that a *combination* under the Act can exist without any agreement, express or implied. *United States* v. *Parke, Davis & Co.*, 362 U. S. 29, 43 (1960). But in combination cases not involving agreements there is some dominating power, economic or other, exerted by one participant or group of participants, without legal justification, to compel the adherence of others to a desired course of action. When, however, one is dealing with a case not involving some dominating force directing or controlling the conduct of others, an agreement, express or implied, is an essential ingredient. This is demonstrated by *Theater Enterprises, Inc.* v. *Paramount Film Distributing Corp.*, 346 U. S. 537 (1954) and *Delaware Valley Marine Sup. Co.* v. *American Tobacco Co.*, 297 F. 2d 199 (3d Cir. 1961), *cert. denied*, 369 U. S. 839 (1962).

In *Theater Enterprises* eight competing movie distributors refused to deal with plaintiff, a suburban Baltimore theater. There was no direct evidence of an agreement among the distributors. In sustaining the trial court's refusal to grant a directed verdict for plaintiff, this Court stated:

> "The crucial question is whether respondents' conduct toward petitioner stemmed from independent decision or from an agreement, tacit or ex-

press. To be sure, business behavior is admissible circumstantial evidence from which the fact finder may infer agreement [citing, among others, the *Interstate Circuit* and *Masonite Corp.* cases, *supra*]. But this Court has never held that proof of parallel business behavior conclusively establishes agreement or, phrased differently, that such behavior itself constitutes a Sherman Act offense. Circumstantial evidence of consciously parallel behavior may have made heavy inroads into the traditional judicial attitude toward conspiracy; but 'conscious parallelism' has not yet read conspiracy out of the Sherman Act entirely." (pp. 540-41)

The *Report of the Attorney General's National Committee to Study the Antitrust Laws* (1955) states, in reference to this language, that the Committee "is in full accord with" that reasoning, and adds: "'Conscious parallelism' is not a blanket equivalent of conspiracy. Its probative value in establishing the ultimate fact of conspiracy will vary case by case. Proof of agreement, express or implied, is still indispensable to the establishment of a conspiracy under the antitrust laws." (p. 39)

The *Delaware Valley* case involved five tobacco manufacturers, who gave all their business with Philadelphia shipping to the same distributor, refusing to deal with plaintiff, another distributor. There was no direct evidence of agreement among the manufacturers, though there was evidence from which a jury could infer the awareness of each manufacturer of its competitor's actions. Each manufacturer introduced evidence that it was in its economic interest not to do business with plaintiff. In holding for defendants the court relied on *Theater Enterprises* and stated:

"It has been argued that such uniform decisions, made under economic circumstances tending to make

> the act of one firm or company dependent upon the reactions of others, violate Section 1 even though conspiracy is absent. With this we cannot agree. Section 1 specifies means as well as ends." (p. 207)

An examination of the conscious parallelism cases cited by the Government, and referred to above (p. 115), shows that in each case the "means" were present. In each case there, in fact, was involved either an inferred agreement or else a combination with a dominating power exerted by one or more persons on others, or both. In the instant case it is conceded that Singer and Gegauf made no agreement, express or implied, concerning the enforcement or the licensing of Gegauf Patent No. 1 and it is clear that Gegauf had no power to dominate Singer with respect thereto.

It is anomalous that in this case, in which the Government charges that Singer engaged in an unreasonable restraint of trade, it cites, almost wholly, cases involving clear *per se* violations of Section 1 of the Sherman Act.

The following cases, for instance, all involve plainly *per se* illegal arrangements between owners of competing patents or between a patent licensor and licensees: *United States* v. *United States Gypsum Co.*, 333 U. S. 364 (Govt. Br. 40), involving six corporations controlling by agreements the terms of sale of all gypsum in the United States; *Ethyl Gasoline Corp.* v. *United States*, 309 U. S. 436 (Govt. Br. 26, 40), involving the fixing and controlling of prices that could be charged by approximately 11,000 jobbers, through licensing refiners who could sell only to jobbers licensed by the licensor (who were refused licenses if they did not maintain prices) and by fixing the prices at which the refiners could sell

to such jobbers, which affected 70% to 85% of all gasoline sold; *Standard Sanitary Mfg. Co.* v. *United States*, 226 U. S. 20 (Govt. Br. 40), involving price-fixing agreements among 16 corporations producing 83% of the products in the industry; *United States* v. *Line Material Co.*, 333 U. S. 287 (Govt. Br. 40, 41, 45), involving patentees cross-licensing in such manner as to fix minimum prices; *United States* v. *Krasnov*, 143 F. Supp. 184, *aff'd*, 355 U. S. 5 (Govt. Br. 49), involving a conspiracy to monopolize and agreements of each conspirator not to license without the consent of the other parties and price-fixing agreements; *United States* v. *General Electric Co.*, 80 F. Supp. 989 (Govt. Br. 45), involving numerous patentees forming a world cartel to monopolize world markets and agreements to fix prices; and *United States* v. *National Lead Co.*, 63 F. Supp. 513, 524 (S.D.N.Y.), *aff'd*, 332 U. S. 319 (Govt. Br. 26, 66).

The *National Lead* case, *supra*, cited by the Government in support of the principle that two patent owners cannot agree not to license a third competitor, involved an interchange of patents formed with the purpose of regimenting an industry, the making of territorial allocations and the suppression of Atlantic traffic. Judge Rifkind found that the agreements applied to "inventions not yet imagined" and that, —

> "They applied to commerce beyond the scope of any patents. They extended to a time beyond the duration of any then-existing patent. Ethyl Gasoline Corporation v. United States, 1940, 309 U. S. 436, 456 [Govt. Br. 26, 40]. • • • They extended to countries, such as China, where no system of patent monopolies exists. Interstate Circuit, Inc. v. United States, 1939, 306 U. S. 208 [Govt. Br. 26, 44] • • •

They regulated the disposition of the products after sale by the licensees . . . ."

The only cases not involving *per se* restraints cited by the Government are *Standard Oil Co.* v. *United States*, 283 U. S. 163 (Govt. Br. 24, 40, 41), and *United States* v. *Besser Manufacturing Co.*, 96 F. Supp. 304, *aff'd*, 343 U. S. 444 (Govt. Br. 49).

The *Standard Oil* case involved no illegal agreement and, to the contrary, supports the legality of any restraints imposed by enforcement of the Gegauf patent. In that case the defendants controlled 55% of the total cracking capacity and the cracked gasoline produced thereby constituted 26% of the total gasoline production. This Court stated: "Unless the industry is dominated, or interstate commerce directly restrained, the Sherman Act does not require cross-licensing patentees to license at reasonable rates others engaged in interstate commerce." (p. 172)

The *Besser* case involved express, written agreements among four conspirators controlling 65% of the industry, not to license competitors without the consent of the other parties.

In dealing with *American Tobacco Co.* v. *United States*, 328 U. S. 781 (Govt. Br. 24, 41), the Government compares the exclusory power of the single Gegauf Patent No. 1 with the exclusory power of the three biggest tobacco companies in the United States engaged in conspiring to, and conducting operations intended to, fix prices (Govt. Br. 41).

Direct Sales Co. v. *United States*, 319 U. S. 703 (Govt. Br. 24, 47) has no application whatever to this case. It is not an antitrust case and deals solely with a conspiracy to

violate the Narcotics Act, such conspiracy itself being illegal. That the parties there tacitly agreed to violate the Narcotics Act and thereby violated the conspiracy statute was obvious. It would be interesting indeed to know what the Government's attitude would be if it now discovered that these two criminal distributors of narcotics had been brought to book by the combined "cooperative" action of two legitimate distributors of narcotics, who had "cooperated" to the fullest extent possible to unearth evidence of the activities of these criminals and to obtain their conviction, thus, "for their mutual benefit," eliminating these "common competitors" for many years to come. If we add to the foregoing an assumption that the narcotics sold had been stolen from these "cooperating" distributors, the Government would have a case almost completely analogous to what they *charge* in this case.

Judge Learned Hand, writing the opinion for the Court in *Fashion Originators Guild* v. *Federal Trade Com'n*, 114 F. 2d 80 (2d Cir. 1940), *aff'd*, 312 U. S. 457 (1941), sustained in part an order of the Federal Trade Commission enjoining boycott activities by the Guild and its members against competitors appropriating both published and unpublished designs. He pointed out that the conspirators had no property rights in published designs that were being appropriated and furthermore that the conspiracy was not limited to stopping such appropriations but extended far beyond and amounted to a restraint of legitimate trade. Judge Hand, however, carefully pointed out that under certain circumstances a group boycott "can be justified". He gave the following example:

> "• • • and in the case at bar for example, it would be a lawful form of self-help for members of the Guild to refuse in combination to deal with retailers

> who knowingly bought dresses of those who had stolen 'unpublished' designs; or who got access to them by any other crime, or by a breach of promise not to use them; further, it would be lawful to refuse to deal with a retailer who knowingly bought of one who copied 'unpublished' designs, without the author's consent, however the copier gained access to them." (p. 84)

In conformity therewith the Court modified the order of the Federal Trade Commission to allow the Guild to continue its practices of self-help in "cases in which a retailer knowingly buys dresses, access to the design of which has been procured (1) by fraud, bribery or any other crime, (2) through some breach of contract, or (3) before the design has by 'publication' come into the public demesne." (pp. 85-86)

POINT VII.

THE TRANSACTIONS BETWEEN SINGER AND GEGAUF DID NOT RESULT IN DOMINANCE OF THE MARKET OR IN ANY ILLEGAL RESTRAINT ON COMPETITION

A. In restraint-of-trade cases conduct challenged must be tested in the light of the competitive market.

The cases hold that any restraining actions challenged must be tested in the light of the competitive market. As stated in the *Report of the Attorney General's National Committee to Study the Antitrust Laws* (1955):

> "Cases arising under Section 1 of the Sherman Act may pose at least four main issues. * * * Third, in what market is the effect of the challenged arrangement to be tested, and what evidence is

relevant in establishing that market as a fact to be found by the court? Finally, in that relevant market, does the conduct challenged 'unduly' restrain competition?

"• • • [T]he definition of relevant market [is a problem] common to both Sections 1 and 2 • • •." (p. 12)

In *Standard Oil Co.* v. *United States*, 283 U. S. 163 (1931), the defendants controlled 55% of the cracked gasoline capacity and cracked gasoline constituted 26% of the total gasoline production. This Court, holding that under the circumstances of that case there was no illegal restraint, stated:

"Unless the industry is dominated, or interstate commerce directly restrained, the Sherman Act does not require cross-licensing patentees to license at reasonable rates others engaged in interstate commerce." (p. 172)

In *United States* v. *Columbia Steel Co.*, 334 U. S. 495 (1948), this Court in holding that an acquisition by U. S. Steel did not unreasonably restrain trade relied upon the degree of competition in the relevant market. *United States* v. *E. I. du Pont de Nemours & Co. (Cellophane)*, 351 U. S. 377, 395, n. 23 (1956), we think again clearly indicated that the relevant market is a determining question under Section 1.

In the *Cellophane* case this Court established that the test for determining the market which is applicable to all cases under the Sherman Act is reasonable interchangeability stating:

"In determining the market under the Sherman Act, it is the use or uses to which the commodity is put that control." (p. 395)

This Court specifically reaffirmed the *Cellophane* doctrine of reasonable interchangeability in a conspiracy to restrain case, *United States* v. *International Boxing Club*, 358 U. S. 242, 250 (1958).

The Government must concede as it did below that market considerations may weigh heavily in Section 1 cases "insofar as they are necessary to apply the rule of reason" (Plaintiff's Post-Trial Brief (unprinted), Tr. 6444). This Court only last month in *White Motor Company* v. *United States*, 83 Sup. Ct. 696, said:

> "That 'rule of reason' normally requires an ascertainment of the facts peculiar to the particular business. As stated in *Chicago Board of Trade* v. *United States*, 246 U. S. 231, 238 * * *:
>
> > 'Every agreement concerning trade, every regulation of trade, restrains. To bind, to restrain, is of their very essence. The true test of legality is whether the restraint imposed is such as merely regulates and perhaps thereby promotes competition or whether it is such as may suppress or even destroy competition. To determine that question the court must ordinarily consider the facts peculiar to the business to which the restraint is applied.'" (p. 701)

In *United States* v. *Columbia Pictures Corp.*, 169 F. Supp. 888 (S.D.N.Y. 1959), 189 F. Supp. 153 (S.D.N.Y. 1960), the court relied upon an analysis of the market in which the contracting parties competed and ascertainment of the effect of the operation of the agreement in that market.

In *United States* v. *Huck Mfg. Co.*, CCH Trade Reg. Rep., Par. 70,714, p. 77,850 (E.D. Mich. 1963), Huck owned patents and had entered into a continuing arrangement with Townsend under which no other firm was permitted

to engage in the manufacture and sale of lockbolts. The court, in granting motions for judgments of acquittal, stated that:

> "In every case that has come to my attention in which a patent arrangement was held invalid, the group of firms taking part were in some manner dominant." (p. 77,852)

In *Cutter Laboratories* v. *Lyophile-Cryochem Corp.*, 179 F. 2d 80, 91 (9th Cir. 1949), the pooling arrangement involved an agreement establishing royalties. The court assumed the existence of monopoly power but nevertheless permitted a full inquiry into the nature and extent of the pooled patents, the competitive conditions in the industry and the operation and effect of the pool therein, in what is characterized by the *Report of the Attorney General's National Committee, supra* (p. 245, n. 96) as a sound approach and "a well-reasoned opinion" holding the pool lawful. Thus it is clear that even if Singer and Gegauf had agreed that Singer would enforce Gegauf Patent No. 1 and Singer were dominant in the market, the Government thereby would not have established any illegal restraint of competition. It would still have to establish that the restraint was unreasonable.

B. The right to enforce a valid patent covering a product made and sold by the owner thereof is not affected by the fact that there may be few non-infringing competing machines in the market.

The Government argues that Singer with Gegauf Patent No. 1 dominates the United States market and it sets forth figures based upon a competitive market consisting solely of sewing machines with multiple cam zigzag

mechanisms (Govt. Br. 5-7). By so doing, the Government directly challenges the findings of the trial court that the Singer 401 machine is in a competitive market consisting of straight stitch sewing machines with zigzag attachments, manually operated, replaceable cam and multiple cam machines. The facts supporting the trial court's finding with respect to the competitive market, not set forth in this Point, are set forth in the Appendix hereto.

There are two fallacies in the Government's contention. The first is that it would make the slightest difference whether, through the enforcement of Gegauf Patent No. 1, Singer had 10% or 90% of a market composed of such multiple cam machines. *Cole* v. *Hughes Tool Co.*, 215 F. 2d 924 (10th Cir. 1954), *cert. denied*, 348 U. S. 927 (1955); *United States* v. *L. D. Caulk Co.*, 126 F. Supp. 693 (D.C. Del. 1954). The very purpose of a patent is to grant a monopoly. If not a single manufacturer produced a single non-infringing competing machine for the entire life of Gegauf Patent No. 1 and Singer, solely through enforcement of the patent and without any predatory activities on its part, maintained a 100% monopoly with respect to such machines, it would be entirely legal. It would be solely the result of the lawful enforcement of a valid patent. Therefore, even if it were assumed that Singer and Gegauf agreed that Gegauf would transfer his patent to Singer and that Singer would effectively enforce it, such agreement would have been entirely legal. A patent owner, whether he be the original owner or the assignee thereof granting a license back, may agree with the licensee that the patent owner will enforce the patent for their mutual benefit. *Virtue* v. *Creamery Package Mfg. Co.*, 227 U. S. 8 (1913); *Hazeltine* v. *Avco Manufacturing*

Corp., 227 F. 2d 137 (7th Cir. 1955), *cert. denied*, 350 U. S. 987 (1956); *U. S. Consolidated Seeded Raisin Co.* v. *Griffin & Skelly Co.*, 126 F. 364 (9th Cir. 1903); *United States* v. *L. D. Caulk Co.*, 126 F. Supp. 693 (D.C. Del. 1954).

This Court, in *Virtue* v. *Creamery Package Mfg. Co.*, *supra*, said:

> "• • • The patents under which the articles were manufactured were stated [in the agreement], and it was provided that the Owatonna Company should protect the Creamery Package Manufacturing Company from all suits for infringement, defend the validity of the patents, and promptly attack infringers. This provision is especially urged by plaintiffs as showing a common and illegal purpose between the companies. It has not that quality. It is but an assurance of title to the rights conveyed." (227 U. S. at 33)

The second fallacy involved in the Government's contention is its assertion that sewing machines with multiple cam zigzag mechanisms constitute the competitive market. If a housewife wishes to buy a sewing machine which will sew zigzag stitches, whether she desires to make functional or very fancy zigzag patterns, she has the choice of a variety of makes and types of machines at a variety of prices. Competing available sewing machines include multiple cam, replaceable cam, manually operated and straight stitch sewing machines with zigzag attachments (Appendix, 1a-11a, 14a-15a). The trial court found:

> "• • • If it were necessary to our decision, we would find the relevant market to be automatic zigzag sewing machines of four types: machine carried multicam zigzag, replaceable cam, manually oper-

> ated and the straight stitch sewing machine with zigzag attachment. These four machines, we find, are sufficiently unique to constitute a separate market within which these machines are reasonably interchangeable for the use to which they are put. * * *" (Op., R. 1716-17)

These findings are supported by a plethora of evidence which included not only the testimony of defendant's witnesses, exhibits in the form of competing machines and samples of the work produced by these machines but also included admissions of plaintiff's counsel and plaintiff's own witnesses. (See Appendix)

C. The facts show that Singer and Gegauf did not dominate the United States market and the vigor of foreign competition precluded any possibility of an unreasonable restraint by Singer.

The undisputed evidence shows that the sewing machines covered by Gegauf Patent No. 1 constituted a minimal percentage of the market in which they compete. By 1957, when the Japanese and Europeans had over 65% of the United States household sewing machine market, multiple cam machines (other than those of Singer and its licensees) which would have been covered by such patent, if issued, were only 2% of such market. The comparable figures for 1958 were 68% and 2.7%, and, for 1959, 70% and 2.3%. In 1959 all sewing machines covered by this patent, including those of Singer and its licensees, constituted only 11.5% of the market in which these sewing machines competed. The small percentage of the market which was affected by the Gegauf patent negatives any capacity for dominance over the Japanese and Europeans, let alone a dominance capable of exer-

cising any unreasonable restraint on competition. Even if there had been an agreement between Singer and Gegauf, the assertion of patent rights against infringers, particularly where these patent rights affect such a small proportion of competition, would have constituted no illegal restraint of the market. The restraint of infringers is a necessary concomitant to the whole policy of protection and encouragement of inventions which originates in the Constitution and which is given effect in the patent laws.

The Government asserts that with one minor exception Singer is "the sole" United States manufacturer of household sewing machines and that its only competition in the United States comes from imports (Govt. Br. 5). This statement without any accompanying explanation is misleading. The fact is that the Japanese dominate the United States market.

In 1947 Singer and six other domestic manufacturers of household sewing machines produced the entire supply of sewing machines for the American market, no such machines having been imported from Japan and less than 2,500 of such machines having come from Europe (Op., R. 1666; Dx. 185, R. 1581). In the year 1959, however, 1,100,000 sewing machines were imported from Japan and over 100,000 non-Singer machines were imported from Europe (Op., R. 1666; Dx. 184, R. 1579; Dx. 185, R. 1581). By 1959, with the exception of a small manufacturer of machines to specifications on orders from a single domestic customer, Singer was the sole remaining manufacturer of household sewing machines in the United States (Op., R. 1666; Stip. Pars. 10-11, R. 26).

The devastating effect of this foreign competition is illustrated by the fate of the sewing machine manufactur-

ing facilities of White Sewing Machine Corporation. White and Sears, Roebuck & Company, its customer, had been fighting "a side by side but losing battle" over these years in trying to sell White's lines of sewing machines made in the United States in competition with the foreign-built imports. When Sears discontinued selling the White machines and started importing machines for distribution by Sears, White had no chance of supporting its sewing machine manufacturing facilities. Confronted with this situation, White discontinued its manufacturing operations in the United States in 1957 and had its lines of sewing machines produced for it in Japan and Germany (Op., R. 1666-67; Dx. 170, R. 1569; Bruder, R. 788-89; Barnum, R. 931-32).

Although Singer has been able to withstand the assault upon that market by Japanese manufacturers and exporters, who were and are controlled in practically all matters by the Japanese Government (Fairman, R. 801-09; Sogi, R. 886-98; Dx. 176-83 (unprinted), Tr. 5676-5742; Gx. 202 (unprinted), Tr. 5122-32), Singer's share of the market dropped from approximately 57% in 1947 to approximately 30% in 1959, while the Japanese share of the market in that period went from nothing to over 60% (Dx. 192, R. 1588). During this same period Singer's domestic production as a percentage of the United States market dropped from approximately 57% in 1947 to 21% in 1959 (Dx. 192, R. 1588; Dx. 172, R. 1570; Dx. 184, R. 1579; Winter, R. 900). During that period every manufacturer of sewing machines in the United States, with the minor exception noted above, failed to withstand the Japanese competition and ceased manufacture of such machines save Singer alone (Op., R. 1666). Professor Cohen, an expert economist, testified at the trial that

"This is perhaps one of the most competitive blows that U. S. industry has suffered in quite awhile" (Cohen, R. 915).

Singer survived because of its reputation for quality, reliability and service going back more than a century, backed by approximately 1600 wholly-owned retail stores, leased space in 80 department stores and 270 independent retailers throughout the country (Op., R. 1668; Bruder, R. 782-83; Stip. Par. 9, R. 25-26). Singer, however, during this period increasingly relied upon imports of its foreign manufactured sewing machines, which totaled 193,842 sewing machines in 1959 (Dx. 172, 184, R. 1470, 1579; Winter, R. 900).

The vigor of foreign competition in the United States precluded any unreasonable restraint by Singer. As evidenced by the undisputed facts, it was impossible for Singer when it acquired the Gegauf patent application unreasonably to restrain the competitive market (Appendix, 11a-14a).

That Singer was and is confronted with intensive and vigorous competition from Japanese sewing machines is indisputable. The organized competition Singer faces made it entirely reasonable for Singer to acquire the Gegauf application covering the 401 machine.

Research has failed to uncover a single case in which an American company has been charged by the United States Government with trying to exclude products supplied by a foreign cartel covered by a patent of narrow scope which are manufactured and sold in the United States by the owner of such patent. In the past such products have been excluded by the Tariff Commission as unfair competition.

Conclusion

We doubt that, in the 14 intervening years, there has been any antitrust case before this Court to which is so applicable the admonition given to the Government on its appeal in *United States* v. *Yellow Cab Co.*, 338 U. S. 338 (1949). This Court there said:

> "What the Government asks, in effect, is that we try the case *de novo* on the record, reject nearly all of the findings of the trial court, and substitute contrary findings of our own.
>
> * * * * * *
>
> "* * * The judgment below is supported by an opinion, prepared with obvious care, which analyzes the evidence and shows the reasons for the findings. To us it appears to represent the considered judgment of an able trial judge, after patient hearing, that the Government's evidence fell short of its allegations—a not uncommon form of litigation casualty, from which the Government is no more immune than others."

We respectfully submit that the appeal herein should be dismissed and the judgment of the District Court affirmed.

Respectfully submitted,

ARTHUR E. PETTIT,
WINTHROP, STIMSON, PUTNAM & ROBERTS,
40 Wall Street,
New York 5, New York,
Attorney for The Singer Manufacturing Company.

EDWIN J. WESELY,
TERENCE H. BENBOW,
EDWARD A. MILLER,
RICHARD J. RIKER,
JOHN A. FISKE,
Of Counsel.

April 11, 1963

APPENDIX

Facts with Respect to the Competitive Market

A. The Singer 401 machine competes with all manner of sewing machines.

The broad extent of the competitive market in which the Singer 401 machine is sold is made clear by the trial court in connection with its finding that Singer had no intent and made no attempt to achieve an illegal monopoly.*

The trial court found that Singer, in its attempt to eliminate infringers of Gegauf Patent No. 1, left

> "as competitors all manner of sewing machines with devices capable of doing the same thing over which Singer had no control. * * *
>
> "* * * If it were necessary to our decision, we would find the relevant market to be automatic zigzag sewing machines of four types: machine carried multicam zigzag, replaceable cam, manually operated and the straight stitch sewing machine with zigzag attachment. These four machines, we find, are sufficiently unique to constitute a separate market within which these machines are reasonably interchangeable for the use to which they are put. * * *" (Op., R. 1716-17)

These findings are supported by the testimony of defendant's witnesses, exhibits in the form of competing machines and samples of the work produced by these machines, and admissions of plaintiff's counsel and plaintiff's own witnesses.

The uncontradicted evidence shows that the Singer 401 machine with a machine-carried multiple cam device covered by the Gegauf patent was and is in competition with numerous other sewing machines with machine-carried multiple

* The Government does not challenge the trial court's holding that Singer did not attempt to monopolize (Govt. Br. 21, n. 16).

cam devices which do not infringe any patents owned by Singer (R. 228, 230, 231-32; Hutton, R. 611-12; Dx. 112, 112B, 113, 113B, 114, 115; Gx. 207). The trial court had placed in evidence before it sewing machines from both Japan and Europe with machine-carried multiple cam devices which it is conceded do not violate any of the Singer patents and which are available to any housewife (Dx. 112, 113, 114, 115; Gx. 207; Stip. Pars. 94-96, 128-29, R. 58-59, 65; Gx. 188-90 (S-22-S-23), R. 1332; Billings, R. 977). These show not only competition in sewing machines with this very type of device but they also show how easy it is to build around the Singer patents and how narrow is the coverage of these patents. Singer in fact had been offered other such devices on three different occasions—by Pfeffercorn in 1954, by Haas in 1955 and by Gegauf in 1957 (Dx. 1-3, R. 1365-70; Gx. 53, R. 1100-02). Swatches of material (Dx. 112B, 113B, Hutton, R. 611-12) on which various patterns of zigzag stitches had been stitched, using non-infringing machine-carried multiple cam devices were received in evidence showing that these devices do just as good a job as the infringing devices (R. 228, 230, 231-32; Dx. 112, 112B, 113, 113B, 114, 115; Gx. 207; Hutton, R. 611-12; Stip. Pars. 94-96, 128-29, R. 58-59, 65; Gx. 188-89 (S-22-S-23), R. 1332; Billings, R. 977).

Government counsel made important, though short-lived, admissions on the competitive nature of these non-infringing machines (R. 228). Government counsel stated:

> *"The government concedes that Defendant's Exhibit 112 is not covered by the Gegauf patent. It concedes that the function of the machine and the work product of the machine stitch patterns may be the same."* (228, emphasis supplied)

The following colloquy thereupon took place between the trial court and the Government counsel:

> "The Court: *The united work product of both of these machines is the same.*
>
> Mr. Elkins: *Right, your Honor.*
>
> The Court: And Exhibit 112 is not an infringement of Gegauf No. 1.
>
> Mr. Elkins: That is true, your Honor.
>
> The Court: *And Exhibit 112 may be used in the household as a substitute for 111.*
>
> • • • • •
>
> Mr. Elkins: I do not want to testify, your Honor. We are merely representing that it does not appear that both machines are alike in relation to their mechanisms. There might be a difference in the effectiveness and the durability of the mechanisms of the two machines. *We do agree that the stitch pattern created would be the same in each machine.*
>
> The Court: *And the household work product would be the same.*
>
> Mr. Elkins: *It would be.*
>
> The Court: *That is another way of saying that one could be substituted for the other.*" (R. 230, emphasis supplied)

The following day the Government attempted to hedge on these admissions and stated that it did not concede that the non-infringing mechanism was the "functional equivalent" of the infringing mechanism (R. 232, but see R. 977).

Before the end of the trial, the following colloquy took place:

> "The Court: • • •
>
> Now assuming these machines are properly manufactured by a competent factory, will they serve the same purpose and meet the same customer demand as the Singer machines?

> Mr. Weinstein [another Government counsel]: We take no position on these machines, your Honor, except to admit that they are built-in cam machines. • • •" ((unprinted), Tr. 2104)

The Government now apparently, though certainly not directly, concedes what the evidence made clear, that these machines are all competitive with each other (Govt. Br. 4).

Sewing machines with these non-infringing devices in 1959, the year after the Gegauf patent issued, amounted to almost one-third of all sewing machines with machine-carried multiple cam devices imported into the United States from Japan and almost 500% of the number imported the year before (Dx. 189, R. 1586; Gx. 191 (S-25), R. 1334).

As stated in the holding of the trial court above quoted, the market in which the machines covered by the Gegauf patent compete includes not only machine-carried multiple cam machines but replaceable cam machines, manually operated machines and straight stitch machines with zigzag attachments. The record is replete with evidence to support the trial court's finding (Op., R. 1716-17; Hutton, R. 621; Bruder, R. 743, 773, 783, 848; Cohen, R. 878-79; Barnum, R. 939-40; Hovsepian, R. 961).

Nowhere in its brief does the Government dispute the fact that all types of household sewing machines compete. The Government's own witness, called as an expert, Mrs. Hovsepian, frankly admitted on cross-examination that "all machines compete with all machines" (R. 961). This competition is in price, in quality and in variety of features (Op., R. 1659).

All household sewing machines sold today are capable of sewing zigzag stitches and zigzag stitch patterns (Hutton, R. 606, 648, 685-86, 689-93; Bruder, R. 744). The Government erroneously states that the straight

stitch machine can sew only a straight line. It however concedes that all of the other types of machines "can produce various ornamental and functional zigzag stitches as well as straight stitches" (Govt. Br. 3-4). All straight stitch sewing machines equipped with a zigzag attachment do sew zigzag stitches. The Singer 404 straight stitch machine is sold with a zigzag attachment, in which different cams may be inserted, as standard equipment (Hutton, R. 602-04, 648, 685-86, 689-93; Brúder, R. 744). The Government in its brief gives the impression that only the machine-carried multiple cam machine "can produce any one of a large number of different zigzag stitches" (Govt. Br. 4). The fact is that any one of a large number of different zigzag stitches can be made with the replaceable cam machine, the manually operated machine, and the zigzag attachment to a straight stitch machine (Dx. 106C, 116C, 141C, 143).

Sewing machines equipped with any of such three types of mechanisms for making zigzag stitches compete in the market for the customer's favor with sewing machines with machine-carried multiple cam devices. (Op., R. 1716-17).* The trial court had presented before it as exhibits sewing machines equipped with various and different devices that may be used to make zigzag stitches. All of these devices make zigzag stitches of both a functional and ornamental character with reasonable facility and comparable results (Hutton, R. 647-48, 684-85). As the trial court found, "these machines are reasonably inter-

* In this connection it is significant that, while from 1957 to 1959 imports of Japanese-manufactured sewing machines with manual devices and replaceable cam devices increased from 22.1% to 46.7% of all Japanese sewing machines imported into the United States, the imports of Japanese-manufactured sewing machines with multiple cam devices increased from only 3.3% to 4.6% of such imports (see chart *infra*, p. 12a).

changeable for the use to which they are put" (Op., R. 1717). The trial court also had presented to it samples of various types of both functional and ornamental zigzag stitches made by the various devices. These were presented first on a dress (Dx. 142; Hutton, R. 606-08) on which both types of zigzag stitches were made by the four different types of devices and then on numerous swatches (Dx. 106C, 116C, 141C, 143) on which were similarly shown the stitches made by the different types of devices.

Sewing machines are complicated and ingenious mechanisms. They come with many different devices which do different things or with different devices for doing the same thing. They come with many varied and different features (Bruder, R. 772-73; Hutton, R. 621). The Singer "400" series of sewing machines, for example, emphasizes the slant needle device, the drop-in bobbin device, the fixed bobbin case, the gear motor drive, and the die-cast aluminum housing (Bruder, R. 764-65). Among the variety of features available with any sewing machine is some device for making zigzag stitches. If a housewife is interested in a zigzag feature she has a choice of numerous sewing machines with various devices which accomplish this purpose (Op., R. 1658; R. 216-17, 219; Hutton, R. 602, 604, 606-09, 613, 648, 685-86, 689-93; Bruder, R. 743-44; Stip. Pars. 6-8, R. 23-25). Some sewing machines without a machine-carried multiple cam device, such as the Kenmore Model 90, the Necchi Supernova Ultra, the Elna Plana Supermatic and the Vigorelli Fantasy, have zigzag features possessed by none of the Singer sewing machines, such as the stitch elongator mechanism, the cam controlled forward and reverse feed and the cam controlled lateral feed. By means of these devices much more elaborate ornamental zigzag patterns may be made than can be

made on any Singer sewing machine, and the Vigorelli Fantasy makes the most elaborate of all (Dx. 146, 146A; Dx. 146B, R. 1543; Dx. 146C (unprinted), Tr. 5554; Dx. 147, 147A, 148, 148C, 149, 149A; Dx. 167 (unprinted), Tr. 5571-73; Hutton, R. 625-38, 640-43).

The Government itself at one point in the trial stated that it agreed with the assertion of defendant's counsel that "there are numerous machines with features that the Singer 401 does not have that compete with the Singer 401, and none of these machines has built-in cams" (R. 626). After a five minute recess, however, the Government withdrew its concession (R. 627) but the fact still remains.

Sewing machines with all four types of devices are to be found in the market at each of a wide variety of price levels (Stip. Par. 146, R. 73-75; Gx. 197 (S-86), R. 1338-39; Ex. S-87-S-92, R. 1633-46; Bruder, R. 756-57, 822-23; Cohen, R. 882). Sewing machines with machine-carried multiple cam devices, sewing machines with replaceable cam devices, and sewing machines with manual devices each sold at price levels varying from $90 to $360 (S-86 through S-92). Straight stitch sewing machines, all of which are capable of taking zigzag attachments are sold at prices ranging at least from $126.95 to $229 (Bruder, R. 822-23) in competition with sewing machines with machine-carried multiple cam devices, replaceable cam devices and manual devices sold within the same range. Within practically whatever price range the housewife may shop, she has equally available to her competing models of sewing machines with machine-carried multiple cam devices, replaceable cam devices, manual devices and zigzag attachment devices (Stip. Par. 146, R. 73-75; Gx. 197 (S-86), R. 1338-39; Ex. S-87-S-92, R. 1633-46; Bruder, R. 756-57, 822-23; Cohen, R. 882).

Prices of sewing machines depend upon numerous factors other than the peculiar device for making zigzag stitches—such as the reputation of the manufacturer, the quality of the sewing machine, other sewing machine features, appurtenances and attachments accompanying the sewing machine, availability of service and parts, type and extent of financing arrangements made available, furnishing of lessons or instructions as to the use of the sewing machine, type and effective time of guarantee, cost of manufacture and distribution, location and type of shop at which the sewing machine is sold, and promotion and advertising expenditures (Op., R. 1659; Bruder, R. 781-82; Stip. Par. 144, R. 72).

The zigzag feature of any sewing machine is a comparatively minor consideration and there are many other features which are more vital to the usefulness of a sewing machine to the housewife. The uncontradicted evidence is that 90% of a housewife's sewing is straight stitching (Hutton, R. 618, 619, 664; Ex. S-49 (unprinted), Tr. 2610). Garments and household furnishings can be made and mending can be done entirely by the use of straight stitching alone (Hutton, R. 613-14, 617). In fact, the patterns supplied by the large commercial pattern companies from which the housewife makes her own dresses, provide only for straight stitching (Hutton, R. 617).

Some prominent retailers with large sales of sewing machines, including Montgomery Ward and Sears, Roebuck, do not carry sewing machines with a machine-carried multiple cam device at all (Op., R. 1706; Bruder, R. 777, 830). In 1961 Sears, Roebuck ceased to import or sell such sewing machines and substituted as its top-of-the-line machine one with a replaceable cam device manufactured in Japan (Op., R. 1706; Stip. Pars. 117,

141, R. 64, 71-72; Bruder, R. 777; Hutton, R. 637-41). This was in spite of the fact that Sears, Roebuck was free to sell sewing machines covered by the Gegauf patent because it has a license from Singer to do so (Op., R. 1706; Stip. Par. 101, R. 61; Ex. S-19 (unprinted), Tr. 2576-79). Montgomery Ward also carried a sewing machine with a replaceable cam device as its top-of-the-line (Dx. 173 (S-432) (unprinted), Tr. 5604).

The fact that sewing machines do differ in their features is the very essence of competition. That is why manufacturers think up devices so that they may compete more effectively with other manufacturers. It may be that the difference in features enables a sewing machine to perform more easily or efficiently in one respect or another. It may be that one has a different feature which makes it peculiarly susceptible to good-selling talk. But they will all sew and they will all sew zigzag stitches. Each product produced by a manufacturer with his own choice of features does not thereby become part of a different market. This Court, in the *Cellophane* case, made this very clear when it said:

> "But where there are market alternatives that buyers may readily use for their purposes, illegal monopoly does not exist merely because the product said to be monopolized differs from others. If it were not so, only physically identical products would be a part of the market." (351 U. S. 377, at 394)

Sewing machines with zigzag attachments, manual devices, replaceable cam devices and machine-carried multiple cam devices are all advertised in the same media, namely, newspapers, magazines, consumer periodicals, trade journals, radio and television (Bruder, R. 761-62, 779; Dx. 164, R. 1563). Sewing machines with each of

these various devices are advertised, in many instances, in the same advertisement (Bruder, R. 748-49, 779; Gx. 200, R. 1343; Dx. 156, R. 1551). In its advertising, Singer presented its 401, 403 and 404 machines as being a group of three sister sewing machines, all of which would perform substantially the same function (Op., R. 1670; Bruder, R. 758-59; Gx. 200, R. 1343; Dx. 164, R. 1563).

Manufacturers, wholesale distributors and retailers do not confine themselves to the manufacture, distribution and sale of sewing machines with a particular type of zigzag device (Bruder, R. 743-44, 777-79). Manufacturers sometimes manufacture sewing machines with two or three types of devices (Bruder, R. 778; Stip. Pars. 91, 114, R. 57, 63; Ex. S-18, S-21, R. 1619-20, 1622). Wholesale distributors ordinarily carry sewing machines with several types (Bruder, R. 778; Barnum, R. 939; Margulies (unprinted), Tr. 2073-75; Stip. Pars. 90, 113, R. 57, 63; Ex. S-17, S-20, R. 1618-19, 1621). Retailers do not carry sewing machines with machine-carried multiple cam devices to the exclusion of sewing machines with other types (Bruder, R. 777-78). Retailers do not physically segregate, for purposes of sale, sewing machines which are provided with, or can be provided with, the different devices for making zigzag stitches, but rather offer all household sewing machines together as a group (Bruder, R. 743, 778-79).

The trial court's finding that sewing machines with machine-carried multiple cam devices, sewing machines with replaceable cam devices, sewing machines with manual devices, and sewing machines with zigzag attachments are all part of one market, meets every economic and legal test: These sewing machines all compete for the buyer's favor. They are all available in the same product market to the buyer. They all have reasonably

similar uses and they are reasonably interchangeable and acceptable for the same purposes.

B. The vigor of the foreign competition which Singer had to meet.

By 1959 the over one million sewing machines imported from these Japanese manufacturers and exporters operating under a cartel system constituted 63.7% of the household sewing machine market in the United States (Dx. 185, R. 1581; Dx. 191, 192, R. 1587, 1588; Dx. 172, R. 1570; Cohen, R. 914-15, 921-22). During the ten years preceding the trial of this case the household sewing machine industry in Japan had been consistently one of the top three export industries of Japan. Such industry had several times been the second largest export industry in Japan; it frequently had been the third largest export industry in Japan, and occasionally had been the fourth largest export industry (Fairman, R. 805-06, 798-99).

Many Japanese manufacturers and exporters have either set up sales subsidiaries in the United States or have purchased controlling interests in domestic distributors of sewing machines, including the Nippon Sewing Machine Company, which owns Brother International Corporation; Janome Sewing Machine Company, which recently purchased New Home Sewing Machine Company and its distribution outlets in the United States; and Fujikoyo Industries, which owns the Fuji Industrial Company in the United States (Op., R. 1667; Stip. Par. 98, R. 60-61; Fairman, R. 809-11).

These Japanese manufacturers and exporters operate under a system authorized by Japanese laws under which the Government of Japan, working with or through Japanese associations of manufacturers and exporters of household sewing machines, controls and is authorized by

the law of Japan to control the export of such sewing machines from Japan to the United States by (a) fixing the minimum prices at which such sewing machines may be exported, (b) fixing the maximum quantity of such sewing machines which may be exported, (c) allocating sewing machines for export among the various exporters, (d) registering factories which may manufacture such sewing machines for export, (e) fixing detailed standards of minimum quality with which such sewing machines must comply before such sewing machines may be exported, and (f) prescribing the time and methods of payment for such sewing machines which are exported (Fairman, R. 801-09, 821; Sogi, R. 886-98; Dx. 176-83 (unprinted), Tr. 5676-5742).

The vigor of the foreign competition is apparent from the statistics set forth in the following paragraphs:

(1) The following number of household sewing machines were exported from Japan to the United States in the years 1957, 1958 and 1959 (Gx. 191 (S-25), R. 1334; Ex. S-31-S-33, R. 1623-25; Dx. 189, R. 1586; Dx. 175, R. 1578; Bruder, R. 744):

	1957	%	1958	%	1959	%
Straight Stitch	679,736	(74.3)	643,407	(65.5)	567,389	(45.5)
Zigzag Type Unknown..	1,925	(0.3)	78	(—)	40,127	(3.2)
Manual	117,121	(12.8)	202,041	(20.6)	375,111	(30.1)
Replaceable Cam	85,368	(9.3)	91,396	(9.3)	206,539	(16.6)
Machine-Carried Multiple Cam	30,142	(3.3)	44,994	(4.6)	57,732	(4.6)
Total	914,292	(100)	981,916	(100)	1,246,898	(100)

(2) The combined total of Japanese made and European made household sewing machines, not including Singer machines, imported into the United States as well as the

percent relationship which imported sewing machines with machine-carried multiple cam devices bear to the combined total is as follows (Gx. 191 (S-25), R. 1334; Ex. S-31-S-33, R. 1623-25; Dx. 189, R. 1586; Dx. 175, R. 1578; Bruder, R. 744; Gx. 194 (S-28), R. 1336; Dx. 184, 186, R. 1579, 1582; Dx. 191, R. 1587; Cohen, R. 918):

Year	Total European and Japanese Sewing Machines	Machine-Carried Multiple Cam
1957	1,077,943	4.6%
1958	1,109,271	6.0%
1959	1,370,645	7.2%

(3) The share Japanese manufacturers, European manufacturers and Singer had of the household sewing machine market in the United States for the years 1957, 1958 and 1959 is as follows (Ex. S-31-S-33, R. 1623-25; Gx. 190 (S-24), R. 1333; Dx. 184, 186, R. 1579, 1582; Dx. 191, 192, R. 1587, 1588; Cohen, R. 918; Dx. 188, R. 1585; Dx. 187, R. 1583; Dx. 172, R. 1570):

	1957	%	1958	%	1959	%
Japan	914,292	(55.4)	981,916	(60.3)	1,246,898	(63.7)
Singer	507,417	(30.8)	517,524	(31.9)	584,294	(29.9)
Europe	163,651	(10.0)	127,355	(7.8)	123,747	(6.4)
Non-Singer U. S. Production	63,000	(3.8)	—	(—)	—	(—)
Total	1,648,360	(100)	1,626,795	(100)	1,954,940	(100)

The above figures show that:

(a) Japanese-made household sewing machines are the most important factor in and dominate the United States market, their share amounting to 63.7% thereof.

(b) While the share of Japanese-made sewing machines in the United States market has been growing, the share

of European-made as well as Singer-made sewing machines has declined *and virtually all non-Singer United States production has ceased.*

C. The Japanese and European manufacturers were free at all times to manufacture and sell non-infringing sewing machines with machine-carried multiple cam devices.

Gegauf Patent No. 1 is a patent of exceedingly narrow scope. This is demonstrated by an analysis of claim 1, the "broad" claim, of such patent. In order to infringe such claim, a machine-carried multiple cam mechanism must incorporate therein, among others, each of the following features or their equivalents (Stip. Par. 92, R. 58):

(1) a series of rotary cams having different stitch pattern configurations and mounted about a common axis;

(2) a cam follower mounted for movement radially of the common axis and having a single cam-engaging head with one end engaging and responding to the surface of a cam of the series; and

(3) a manually operable member for withdrawing the cam-engaging head from and radially of a selected cam surface; with

(4) the series of cams and the single cam-engaging head being relatively shiftable lengthwise of the common cam axis after the cam follower has been withdrawn radially from a selected cam, thereby to effect a partial or a complete traverse of the series of rotary cams, whereby the single cam-engaging head can be manually engaged with one cam after the other in any desired sequence.

The narrowness of the Gegauf Patent No. 1 and the ease with which it has been built around is demonstrated by the increasing number and proportion of non-infringing

sewing machines having machine-carried multiple cam mechanisms which have been and are being imported into the United States from Japan (Gx. 191-92 (S-25-S-26), R. 1334-35).

In 1958 and 1959 companies started manufacturing machines with non-infringing machine-carried multiple cam mechanisms. The result was that in 1958 machines with mechanisms not infringing Gegauf Patent No. 1 represented 8½% of the machine-carried multiple cam machines imported into the United States from Japan. In 1959 machines with mechanisms not infringing such patent represented 32% of the machine-carried multiple cam machines imported into the United States from Japan (Gx. 191, 192 (S-25-S-26), R. 1334-35; Stip. Par. 91, R. 57; Ex. S-18, R. 1619-20). In other words, such non-infringing machines had increased from zero in 1957 to 8½% in 1958 to 32% in 1959, the number of such imports in 1959 being 500% of the number of similar imports in 1958 (Gx. 191 (S-25), R. 1334).

Five models of machine-carried multiple cam sewing machines being imported from Japan and Europe which do not infringe Gegauf Patent No. 1 were introduced into evidence before the trial court (Op., R. 1716; Gx. 207; Dx. 112, 112B, 113, 113B, 114, 115; Stip. Pars. 94-97, R. 58-60). As was demonstrated by the testimony, these machines are fully competitive in every respect with the Singer 401 machine (Hutton, R. 611; Billings, R. 977-78, 981, 983-89; Herbst, R. 992-1002; Curreri, R. 1004). There is no reason why machine-carried multiple cam mechanisms not infringing Gegauf Patent No. 1 cannot be made to any extent and in numerous forms and variety by Japanese or other manufacturers who wish to make them.